HAL
open science

Design of observers and certainty equivalence controllers for differential inclusions: a passivity approach

Bernard Brogliato, W.P. Maurice H. Heemels

To cite this version:

Bernard Brogliato, W.P. Maurice H. Heemels. Design of observers and certainty equivalence controllers for differential inclusions: a passivity approach. [Research Report] RR-6916, INRIA. 2009. inria-00380820

HAL Id: inria-00380820

https://inria.hal.science/inria-00380820v1

Submitted on 4 May 2009

HAL is a multi-disciplinary open access archive for the deposit and dissemination of scientific research documents, whether they are published or not. The documents may come from teaching and research institutions in France or abroad, or from public or private research centers.

L'archive ouverte pluridisciplinaire **HAL**, est destinée au dépôt et à la diffusion de documents scientifiques de niveau recherche, publiés ou non, émanant des établissements d'enseignement et de recherche français ou étrangers, des laboratoires publics ou privés.

INSTITUT NATIONAL DE RECHERCHE EN INFORMATIQUE ET EN AUTOMATIQUE

Design of observers and certainty equivalence controllers for differential inclusions: a passivity approach

Bernard Brogliato — W.P.M.H. Heemels

N° 6916

May 2009

Thème ?

Rapport de recherche

ISSN 0249-6399 ISRN INRIA/RR--6916--FR+ENG

Design of observers and certainty equivalence controllers for differential inclusions: a passivity approach

Bernard Brogliato * , W.P.M.H. Heemels †

Thème ? —
Projet Bipop

Rapport de recherche n° 6916 — May 2009 — 34 pages

Abstract: This paper deals with the design of state observers for a class of systems with set-valued right-hand-sides. Two main classes of set-valued mappings are considered: maximal monotone and time-invariant; or normal cones to possibly time-varying sets (not necessarily convex). Such controlled systems can be embedded in various kinds of differential inclusions with absolutely continuous and bounded variation solutions (inclusions with maximal monotone multivalued mappings, and the perturbed Moreau's sweeping process), using a suitable state space transformation. The well-posedness properties of the observers dynamics are carefully analyzed. The stability of the observation error is proved. Then the problem of stabilization with a feedback control using the estimated state is studied in a particular case. Most of the results rely on rendering some suitable operator dissipative (or SPR in the linear case).

Key-words: observer, multivalued systems, differential inclusions, sweeping process, maximal monotone mappings, convex analysis, Lur'e systems, KYP lemma, dissipative systems, positive real systems.

* INRIA, ZIRST Montbonnot, 655 avenue de l'Europe, 38334 Saint-Ismier, France, Bernard.Brogliato@inrialpes.fr
† Department of Mechanical Engineering of the Eindhoven University of Technology, P.O. Box 513, 5600 MB Eindhoven, The Netherlands, E-mail: m.heemels@tue.nl

Unité de recherche INRIA Rhône-Alpes
655, avenue de l'Europe, 38334 Montbonnot Saint Ismier (France)
Téléphone : +33 4 76 61 52 00 — Télécopie +33 4 76 61 52 52

Synthèse d'observateurs d'état et commande d'inclusions différentielles: une approche basée sur la passivité

Résumé : Dans cet article nous proposons une étude de la synthèse d'observateurs pour une classe de systèmes multivalués, avec second membre maximal monotone, ou bien se mettant sous la forme d'un processus de rafle perturbé (inclusion dans un cône normal). Une propriété de passivité est utilisée afin de mettre le système sous une forme canonique adéquate, permettant de montrer l'existence et l'unicité des solutions. La stabilité de la dynamique d'erreur d'observation est étudiée, et la stabilisation avec un feedback de l'état observé est démontrée dans certains cas.

Mots-clés : Observateurs d'état, systèmes multivalués, inclusions différentielles, processus de rafle, opérateurs maximaux monotones, analyse convexe, systèmes de Lur'e, Lemme KYP, systèmes dissipatifs, systèmes positifs réels.

1 Introduction

Multivalued dynamical models are ubiquitous in many engineering fields such as mechanics (mechanical systems with unilateral constraints and/or friction), electrical engineering (switched circuits), hybrid systems (relay control systems, discontinuous dynamical systems adopting generalized solutions concepts), economics (projected dynamical systems describing oligopolistic markets or traffic networks) and so on, see e.g. [34, 36, 41, 57, 72, 4, 13, 37, 32]. As a multivalued mapping is a mapping that assigns a set of possible values to its input argument, the resulting models fall within the realm of differential inclusions [9, 32, 68, 26]. To illustrate the broad range of applications for this type of models, consider the class of Lur'e systems with multivalued mappings in the feedback path (see figure 1). Such systems consist of the interconnection of a linear system of the form

$$\begin{cases} \dot{x}(t) = Ax(t) - Gw(t) + Bu(t) \\ z(t) = Hx(t) \\ y(t) = Cx(t) \end{cases} \tag{1a}$$

with a multivalued nonlinearity of the form

$$w(t) \in \rho(t, z(t)). \tag{1b}$$

The variables $x(t)$ and $y(t)$ denote the state and the measured output, respectively, and $z(t)$ and $w(t)$ are the variables going into and coming out of the nonlinearity, respectively, at time $t \in I\!R$. Systems of the considered type may arise as a natural consequence of modelling (e.g. friction models in mechanical systems, descriptions of ideal diodes in electrical circuits, etc.) or as a consequence of using generalized solution concepts for discontinuous dynamical systems (e.g. Filippov or Utkin solutions [32, 24]). Examples of systems obtained by interconnecting linear dynamics in a feedback configuration with multivalued mappings, as in figure 1, include various important classes of nonsmooth dynamical systems [73, 14, 41]: certain piecewise linear systems [69, 46, 23, 22] (figure 2a), linear relay systems [45, 62, 53] (figure 2b), mechanical systems with friction [11] (figure 2b), linear complementarity systems [40, 71, 13, 37, 72, 20] (figure 2c), and electric circuits with switching elements (e.g. ideal diodes with characteristics as in figure 2c and MOS transistors as in figure 2d) [4, 38, 21, 19].

Considering the wide range of applications in diverse engineering fields, it is of interest to develop analysis and synthesis methods for multivalued dynamical systems in general and multivalued Lur'e type systems in particular. In the current paper we will focus on the problem of synthesizing globally asymptotically stable observers for a class of differential inclusions that can be written in the general form

$$\begin{cases} -dx + f(t, x(t))dt \in \varrho(t, x(t)) \\ \\ y(t) = c(x(t)), \quad x(t_0) = x_0 \in \mathrm{dom}(F(t_0, \cdot)) \end{cases} \tag{2}$$

with a main focus on the the mentioned class of Lur'e systems (1) that fit in (2) by taking $f(t, x) = Ax + Bu(t)$ and $c(x) = Cx$ as linear functions and $\varrho(t, x) = \rho(t, Hx)$. In (2) $x(t) \in I\!R^n$ is the state variable and $y(t) \in I\!R^p$ is the measured output variable at time $t \in I\!R$. Moreover, dt is the usual Lebesgue measure, dx denotes the differential measure of the function $x : I\!R \to I\!R^n$, $\varrho(\cdot, \cdot)$ is a multivalued mapping, $f(\cdot, \cdot)$ is a function representing the vector field and $c(\cdot)$ is the output map. In case $x(\cdot)$ is absolutely continuous, the differential measure dx is equal to its usual derivative (i.e. it is its derivative almost everywhere). However, when $x(\cdot)$ is only of bounded variation, the usual derivative of $x(\cdot)$ no longer exists as discontinuities are permitted (think of jumps in the velocities during impacts in constrained mechanical systems [1, 34]), so that the differential measure dx is used. In the latter case the inclusion in (2) is called a *measure differential inclusion* as introduced by J.J. Moreau [56].

Concerning the right-hand-side of (2), two main cases will be treated:

1. $\varrho(t, x) = \varrho(x)$, i.e. the multivalued mapping $\varrho(\cdot)$ is time-independent, and we shall assume in this case that it is maximally monotone [66, 42]. The requirement that the mapping is monotone is an extension to the the usually considered concept of continuous, sector bounded nonlinearity (cf. [74]).

2. $\varrho(t, x) = N(S(t); x)$, where $S(\cdot)$ is a closed convex multivalued mapping and $N(S(t); x)$ is the normal cone to $S(t)$ at the point x in the sense of convex analysis [66, 42]. We will also show how the convexity condition may be relaxed.

All these notions will be defined and made precise in the next section.

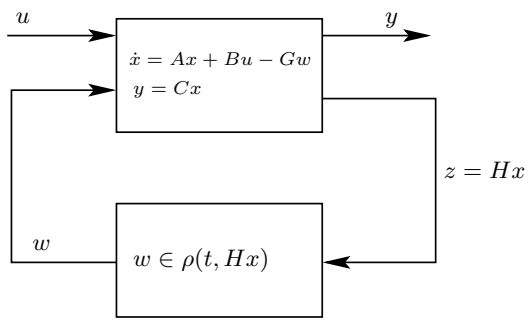

Figure 1: Lur'e type system with multivalued mapping.

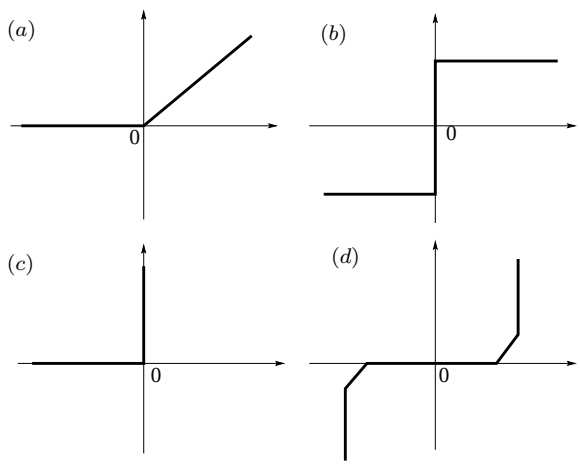

Figure 2: Maximal monotone multivalued mapping.

To reconstruct the state variables x of the above system based on the measured outputs y, we propose two observer structures (the basic and the extended observers), which are based on rendering the linear part of the error dynamics strictly passive in an appropriate sense. As the considered class of systems and the proposed observers are non-smooth, tools of convex analysis are needed to formally analyze and prove their properties. Existence and uniqueness of solutions given an initial condition and exogenous inputs (called the well-posedness) of both the system and the observer are carefully examined. Well-posedness of the observer is an important theoretical question, and, from a practical standpoint, if an observer is to be implemented, well-posedness is convenient to ensure the proper behavior of the implementation. From the existence of solutions to both the observed system and the observer, the existence of solutions to the observation error dynamics is guaranteed as well. After the formal analysis of the well-posedness, we will show that the observer recovers asymptotically the state of the observed system. As such, this paper extends the preliminary ideas that were presented in [39]. Interestingly, this means that in this paper observers are constructed for a class of dynamical systems involving jumps in the state variable.

Observer design methodologies for differential inclusions are rare in the literature. The observability properties of a class of differential inclusions, different from those studied in this paper, are examined in [10], while in [22] observability for a class of linear complementarity systems is studied, however, without considering the problem of observer design. Observer design for linear time-independent systems when additive input disturbances are present is considered in [43]. This work can be viewed also from the perspective of differential inclusions. However,

such differential inclusions are quite different from what is considered in this paper, where the multivalued right-hand-side (for instance, a friction model with stick-slip behavior as in figure 2b) does not represent an uncertain and unstructured noise as in [43]. For Lur'e type systems with *locally Lipschitz* slope restricted nonlinearities observer design was studied before in [8, 31, 64]. Observers for nonlinear systems with Lipschitz continuous output function and vector field are considered in [50]. In [33, 18] and the references therein nonlinear observer designs are proposed for particular classes of smooth nonlinear systems. However, [8, 31, 64, 50, 33, 18] do only consider single-valued nonlinear functions, which exclude the systems considered here as these allow non-smooth, non-Lipschitz and multivalued nonlinearities. As many of the mentioned types of Lur'e systems can be considered as hybrid systems, observer design procedures [5, 6, 44, 61, 60, 48] for hybrid systems are related as well. However, they do not apply to the general class of differential inclusions that we study. Indeed, the works in [5, 6, 44] treat (both discrete-time and continuous-time) switched linear systems assuming that the discrete mode of the system is known, a property that does not hold in our setting. In [61, 60, 48] observers were presented for continuous-time piecewise linear systems, which form only a small subclass (without multivaluedness) of the general setting considered in the current paper. Actually, in [60, 59] one indicates the issues that prevent the straightforward extension of the presented ideas for observer design to the case, where the dynamics becomes discontinuous and thus gives rise to multivalued maps.

The only exception in the literature that really considers observer design for multivalued systems is formed by the work in [58]. However, the differential inclusions considered in [58] are different from those considered in this paper, as compactness and local boundedness properties of the multivalued maps are assumed. These conditions are typically not satisfied by the multivalued right-hand sides that we work with (see e.g. the ones in figure 2c and 2d). Moreover, the assumptions in [58] have the consequence that solutions are absolutely continuous, whereas we allow also for solutions of bounded variation, which is necessary in the framework of *measure differential inclusions*, where discontinuities (jumps) in the state variables are possible.

In addition to observer design, we also study the problem of output-based stabilization of multivalued systems using certainty equivalence control. In certainty equivalence control one designs *output* feedback controllers that generate the control input via a state feedback law using an estimate of the state, which is obtained from an observer. In linear systems, the separation principle gives a formal justification of this approach. In nonlinear systems, no such principle exists in general. Some results for particular classes of nonlinear systems can be found in, for instance, [7, 8, 70]. However, all these works consider single-valued nonlinear systems and to the best of the authors' knowledge, no results are available on multivalued systems as presented in this paper. We present a discussion on this topic for multivalued systems and show that proving stability of the closed-loop can be done in general. Proving the existence of solutions to the closed-loop system (showing that we have not created a "trivial system" without trajectories) is much more involved. This might be considered remarkable. Nevertheless, we provide two separation principles: one for the basic observer and time-independent mappings, and one separation principle applying for both observer structures (basis and extended) for linear complementarity systems [40, 71, 13, 37, 72, 20] that fit in the description (1). These separation principles include both the well-posedness and the stability of the resulting closed-loop system.

The paper is structured as follows. In section 2 some basic concepts of convex analysis and differential inclusions are given. In section 3 the observer design problem is formally stated. Two cases are examined: when the multivalued mapping is time-independent (section 3.1), and when it is time-dependent (section 3.2). The observers dynamics are introduced in section 3.3. In section 3.4 we consider linear complementarity systems and show how they fit in the general class of differential inclusions. Section 4 contains the main results of the paper. The well-posedness of the observer is studied, and the exponential recovery of the state of the observed system is proven. The results for the case of time-independent multivalued mappings are given in section 4.1, whereas the time-dependent multivalued mapping case is treated in section 4.2. The certainty equivalence control for multivalued systems is considered in section 5. A worked numerical example obtained with the INRIA/SICONOS platform [3] is presented in section 6. Conclusions are presented in section 7, and some technical results are given in the appendix.

2 Preliminaries

2.1 Notation and definitions

By I_n we denote the $n \times n$ identity matrix and 0_n is the $n \times n$ zero matrix. For a symmetric matrix A we denote its smallest eigenvalue by $\lambda_{min}(A)$ and its largest eigenvalue by $\lambda_{max}(A)$. A (not necessarily symmetric) square matrix $P \in I\!R^{n\times n}$ is called positive definite (denoted by $P \succ 0$), if $x^\top Px > 0$ for all $x \in I\!R^n$, $x \neq 0$. Similarly, it is called nonnegative definite (denoted by $P \succeq 0$), if $x^\top Px \geq 0$ for all $x \in I\!R^n$. For a nonnegative definite and symmetric matrix P we denote its square root by $R = P^{\frac{1}{2}}$, which satisfies $R = R^\top \succeq 0$ and $R^2 = P$.

The material that follows is taken from [54, 2, 66, 42, 63]. A mapping $\rho : I\!R^l \hookrightarrow I\!R^l$ is said to be *multivalued* if it assigns to each element $x \in I\!R^l$ a subset $\rho(x) \subset I\!R^l$ (which may be empty). The domain of the mapping $\rho(\cdot)$, $\mathrm{dom}(\rho)$ is defined as $\mathrm{dom}(\rho) = \{x \in I\!R^l \mid \rho(x) \neq \emptyset\}$. We define the graph of the mapping $\rho(\cdot)$ as $\mathrm{Graph}\,\rho = \{(x, x^*) \mid x^* \in \rho(x)\}$. A multivalued mapping $\rho(\cdot)$ is said to be *monotone*, if for all $x_1, x_2 \in \mathrm{dom}(\rho)$ and all $x_1^* \in \rho(x_1)$ and $x_2^* \in \rho(x_2)$ it holds that $\langle x_1^* - x_2^*, x_1 - x_2\rangle \geq 0$, where $\langle\cdot,\cdot\rangle$ denotes the inner product in $I\!R^l$. A multivalued mapping $\rho(\cdot)$ is said to be *maximally monotone*, if $\rho(\cdot)$ is monotone and no enlargement of its graph is possible without destroying monotonicity, or more precisely, if for every pair $(x_1, x_1^*) \notin \mathrm{Graph}\,\rho$ there exists a point $(x_2, x_2^*) \in \mathrm{Graph}\,\rho$ with $\langle x_1^* - x_2^*, x_1 - x_2\rangle < 0$. All the examples in figure 2 are maximally monotone mappings with graphs in $I\!R^2$. For two (multivalued) functions $F : I\!R^k \hookrightarrow I\!R^l$ and $G : I\!R^l \hookrightarrow I\!R^m$, we denote by $G \circ F$ their composition, i.e. for $x \in I\!R^k$ we define $G \circ F(x) = G(F(x)) := \bigcup_{y\in F(x)} G(y)$.

For an interval $I \subseteq I\!R$ we denote by $\mathcal{L}^1(I, I\!R^n)$ and $\mathcal{L}^1_{loc}(I, I\!R^n)$ the Lebesgue space of integrable and locally integrable functions, respectively, from I to $I\!R^n$. A function $f : I \times I\!R^n \to I\!R^n$ is separately measurable if $f(\cdot, x) : I \to I\!R^n$ is measurable for all $x \in I\!R^n$. An absolutely continuous (AC) function $f : [a, b] \to I\!R^n$ is a function that can be written as $f(x) - f(a) = \int_a^x \dot{f}(t)dt$ for any $x \geq a$ for a function $\dot{f}(\cdot) \in \mathcal{L}^1([a, b], I\!R^n)$, which is considered as its derivative. An absolutely continuous function is almost everywhere differentiable. A function $f : I \to I\!R^n$ is locally AC if it is AC for any bounded interval $[a, b] \subset I$. Let the *total variation* of $f : [a, b] \to I\!R^n$ be defined as $var_f(x) = \sup \sum_{i=1}^N |f(t_i) - f(t_{i-1})|$ $(a \leq x \leq b)$, where the supremum is taken over all integers N, and all possible choices of the sequence $\{t_i\}$ such that $a = t_0 < t_1 < \ldots < t_N = x$. The function $f(\cdot)$ is said to be of *bounded variation* (BV) on $[a, b]$ if $var_f(b) < +\infty$. If it is right continuous with bounded variation we denote it as RCBV. We write $f \in BV([a, b]; I\!R^n)$ and $f \in RCBV([a, b]; I\!R^n)$, respectively. It is locally RCBV if this holds for any bounded interval $[a, b] \subset I\!R$. If $f(\cdot)$ is BV on $[a, b]$ then it is continuous almost everywhere on $[a, b]$ except at a countable set of points. Moreover it has right and left limits everywhere. The right and left limits of a function at t are denoted $f(t^+) := \lim_{\tau\downarrow t} f(t)$ and $f(t^-) := \lim_{\tau\uparrow t} f(t)$, respectively, provided they exist. Sometimes we also write $f^+(t)$ and $f^-(t)$ for $f(t^+)$ and $f(t^-)$, respectively. In this notation, right continuity of $f(\cdot)$ in t, means that $f(t^+) = f(t)$. We will also use a subclass of RCBV functions, which consists of *piecewise AC functions* (pAC). A RCBV function $f : [a, b] \to I\!R^n$ is called pAC, if there exists a finite set of time instants $\{t_i\}_{i=0,\ldots,N}$ with $a = t_0 < t_1 < \ldots < t_N = b$ such that f is AC on $[t_i, t_{i+1})$, $i = 0, \ldots, N - 1$. Note that the discontinuity points of f are given by (a subset of) $\{t_1, \ldots, t_{N-1}\}$. We call a function $f : [0, \infty) \to I\!R^n$ locally pAC, when it is pAC on each bounded interval $[a, b] \subset [0, \infty)$. Note that a locally pAC function can have an infinite number of discontinuities and that locally pAC functions are a subset of locally RCBV functions. For a given $x \in BV(I; I\!R^n)$ we denote by dx the differential measure generated by x. For $a \leq b$, $a, b \in I$: $dx([a, b]) = x(b^+) - x(a^-)$, $dx([a, b)) = x(b^-) - x(a^-)$, $dx((a, b]) = x(b^+) - x(a^+)$, , $dx((a, b)) = x(b^-) - x(a^+)$. In particular, we have $dx(\{a\}) = x(a^+) - x(a^-)$. A multivalued mapping $S : t \mapsto S(t) \subset I\!R^n$ is (locally) RCBV if it is (locally) RCBV, with the Hausdorff distance being used in the total variation definition above, and $var_S(\cdot)$ is right continuous. The Haussdorf distance between two sets S and $S' \subset I\!R^n$ is $\mathrm{haus}(S, S') = \max\{\sup_{z\in S} d(z, S'), \sup_{z\in S'} d(z, S)\}$, where $d(z, S) = \inf\{\| z - x \| \mid x \in S\}$.

For a set $S \subset I\!R^n$, we define the indicator function of S as $\psi_S(x) = +\infty$ if $x \notin S$, and $\psi_S(x) = 0$ if $x \in S$. When S is non-empty, closed and convex, then $\psi_S(\cdot)$ is a convex lower semicontinuous function which has a subdifferential in the sense of convex analysis, denoted as $\partial\psi_S(\cdot)$. The subdifferential $\partial f(\bar{x})$ of a convex function $f : I\!R^n \to I\!R$ at a point $\bar{x} \in I\!R^n$ is defined as $\{v \in I\!R^n \mid f(x) \geq f(\bar{x}) + \langle v, x - \bar{x}\rangle$ for all $x \in I\!R^n\}$. The normal cone to a convex set $S \subset I\!R^n$ at a point $x \in S$ is $N(S; x) = \{z \in I\!R^n \mid \langle z, y - x\rangle \leq 0, \text{ for all } y \in S\}$. One has $\partial\psi_S(x) = N(S; x)$ when $x \in S$ and $\partial\psi_S(x) = N(S; x) = \emptyset$ otherwise. When S is not convex an extension of the normal cone from convex analysis is the Fréchet normal cone given by $\hat{N}(S; x) = \{z \in I\!R^n \mid \langle z, y - x\rangle \leq$

$o(\| y-x \|)$ for all $y \in S\}$, where $o(\cdot)$ is the standard "little-o" notation meaning that $\frac{o(\|y-x\|)}{\|y-x\|} \to 0$, when $y \to x$ with $y \neq x$ and $y \in S$. In the text we shall denote all normal cones as $N(S;x)$, being understood that when S is not convex this is the Fréchet normal cone. When S is convex both cones are actually equal.

A set $S \subset I\!R^n$ is called r-prox-regular [63, 30, 29] if $\langle \xi_1 - \xi_2, x_1 - x_2 \rangle \geq - \| x_1 - x_2 \|^2$ for all $\xi_i \in \hat{N}(S, x_i) \cap B(0,r)$, where $B(0,r) = \{\xi \in I\!R^n \mid \|\xi\| < r\}$. This means that the mapping $x \mapsto N^r(S,x) \triangleq \hat{N}(S,x) \cap B(0,r)$ is *hypomonotone* with a hypomonotonicity constant $k = 1$. Then the multivalued mapping $x \mapsto N^r(S,x) + x$ is monotone. If a set is r-prox-regular, then all points close enough (at a distance less than r) to S have a unique projection on S, i.e. for all x with $d(x,S) < r$ there is exactly one point s^*, denoted by prox$[S,x]$ such that $s^* = \text{argmin}_{s \in S} \|s - x\|$.

We present a technical lemma that will be of importance in the remainder of the paper. The first statement of the lemma can be derived from [67, Theorem 12.43]. The second statement is a particular case of [67, Exercise 6.7] and of [42, Proposition 5.3.1].

Lemma 1 *Let $\mathcal{H} : I\!R^n \to I\!R^l$ be the affine mapping $x \mapsto Hx + h$ corresponding to the matrix $H \in I\!R^{l \times n}$ and the vector $h \in I\!R^l$ and suppose that H has full row rank l. Then the following statements hold.*

1. *If $\rho : I\!R^l \hookrightarrow I\!R^l$ is a maximally monotone mapping with $\operatorname{dom} \rho \neq \emptyset$, then the mapping $x \mapsto H^\top \rho(Hx + h)$ is also maximally monotone.*

2. *Let a $r-$prox-regular set $D \subset I\!R^l$ be given, and let $C \triangleq \mathcal{H}^{-1}(D) = \{x \in I\!R^n \mid Hx + h \in D\}$. For all $x \in I\!R^n$ and $v = Hx + h$ it holds that*

$$N(C;x) = \{H^\top y \mid y \in N(D;v)\} = H^\top N(D; Hx + h), \tag{3}$$

where $N(C;x)$ is the Fréchet normal cone to C at x (if C is convex then $N(C;x)$ is the normal cone of convex analysis).

□

A linear system

$$\dot{x}(t) = Ax(t) + Bw(t) \tag{4a}$$
$$z(t) = Cx(t), \tag{4b}$$

sometimes shortly indicated by the matrix triple (A, B, C) is called *strictly passive*, if there exist a $P = P^\top \succ 0$ and a $Q = Q^\top \succ 0$ such that:

$$PA + A^\top P = -Q \tag{5a}$$
$$B^\top P = C. \tag{5b}$$

The linear system (4) is called passive, when the above holds with Q only nonnegative definite ($Q \succeq 0$) [16]. Since we impose strictness in the sense of $Q \succ 0$, we use here the term strict passivity. If the system (4) is (strictly) passive and the symmetric matrices $P = P^\top \succ 0$ and $Q = Q^\top \succeq 0$ are such that (5) holds, then the quadratic function $V(x) = \frac{1}{2} x^\top P x$, called a storage function, satisfies the dissipation inequality [16]

$$V(x(t_0)) + \int_{t_0}^{t_1} w^\top(t) z(t) dt \geq V(x(t_1))$$

for all square Lebesgue integrable solutions (w, x, z) to (4) on $[t_0, t_1]$. This inequality reflects that the "energy stored in the system at time t_1, as reflected by $V(x(t_1))$, is never larger than the "energy in the system at time t_0" (i.e. $V(x(t_0))$) plus the supplied energy $\int_{t_0}^{t_1} w^\top(t) z(t) dt$ to the system over the time interval $[t_0, t_1]$. In this case $w^\top(t) z(t)$ is often called the supply rate at time $t \in I\!R$.

2.2 Monotone differential inclusions

Let us consider the differential inclusion (DI)

$$\dot{x}(t) \in -F(x(t)) + f(t), \quad x(t_0) = x_0 \in \mathrm{dom}(F). \tag{6}$$

Definition 1 *A locally AC trajectory $x : [t_0, \infty) \to I\!R^n$ is called a solution to the DI and the initial condition in* (6)*, if for almost all $t \in [t_0, \infty)$ it holds that $\dot{x}(t) \in -F(x(t)) + f(t)$, $x(t_0) = x_0$ and for all $t \in [t_0, \infty)$ $x(t) \in \mathrm{dom}(F)$.* □

The following result is a generalization of the Hille-Yosida Theorem [36, Theorem 3.7.1].

Theorem 1 *Let $F(\cdot) : I\!R^n \hookrightarrow I\!R^n$ be a maximally monotone operator and $f : I\!R \to I\!R^n$ be locally AC. Then the DI and the initial condition in (6) with $x_0 \in \mathrm{dom}(F)$ possess a unique locally AC solution $x(\cdot)$ on $[t_0, +\infty)$ in the sense of Definition 1.* □

Hence, Theorem 1 assures the existence and uniqueness of a locally AC solution in the sense of Definition 1 given an appropriate initial state.

2.3 Perturbed sweeping process and measure differential inclusions

Let us now deal with another class of DIs, which does not possess the structure as in (6). They are called *perturbed Moreau's sweeping processes*, see [30, 29, 17] for recent contributions and [51] for an introduction. We consider (2) with $\varrho(t, x) = N(S(t); x)$ the normal cone to the set $S(t)$ at x, i.e. we consider

$$\begin{cases} -dx + f(t, x(t))dt \in N(S(t); x(t)) \\ \\ x(t_0) = x_0 \in S(t_0), \end{cases} \tag{7}$$

where dt denotes the usual one-dimensional Lebesgue measure. Note that $\mathrm{dom}(F(t, \cdot)) = S(t)$ for all $t \geq t_0$. We suppose that the multivalued mapping $S : [t_0, +\infty) \to I\!R^n$ is locally pAC or RCBV. Sometimes we also consider the case where $S(\cdot)$ is locally AC.

Definition 2 *[30] Consider the DI and the initial condition in* (7) *with the multivalued mapping $S : [t_0, +\infty) \to I\!R^n$ being locally RCBV. A locally RCBV trajectory $x : [t_0, +\infty) \to I\!R^n$ is said to be a solution of (7) if:*

(i) *$x(t_0) = x_0$ and $x(t) \in S(t)$ for all $t \in [t_0, +\infty)$,*

(ii) *the differential vector measure dx satisfies the measure differential inclusion in* (7)*.*

□

As mentioned in section 2.1, recall that, when $S(t)$ is not convex, the normal cone in (7) is not the usual normal cone of convex analysis, but the generalized Fréchet normal cone [30, 29].

If the solution $x(\cdot)$ is locally AC, then the measure differential inclusion and the initial condition in (7) can be rewritten as

$$\begin{cases} -\dot{x}(t) \in N(S(t); x(t)) + f(t, x(t)) \ \text{ a.e. } t \in [t_0, +\infty), \\ \\ x(t_0) = x_0 \in S(t_0). \end{cases} \tag{8}$$

It is noteworthy that when $S(t)$ is closed, convex and non-empty for each t, then $N(S(t); \cdot) = \partial\psi_{S(t)}(\cdot)$ defines a maximally monotone mapping for each fixed t [67, Corollary 12.18]. This is not necessarily the case when $S(t)$ is not convex. The class of DIs in (7) is therefore quite different from the class in (6). The difference between (6) and (7) is further reflected by the fact that in (6) the multivalued mapping $F(\cdot)$ depends on x only and $f(\cdot)$ on the time only, while in (7) both the multivalued mapping and f depend both on the time t and the state x.

Moreover, note also the differences in trajectories for both DIs, which are locally AC for (6), while they might be locally RCBV in (7) and thus can have discontinuities (jumps) in the state variables.

Let us now present existence and uniqueness results for the inclusions of the form (7) and (8). First of all let us present a set of possible assumptions that can be imposed on the multivalued mapping $S(\cdot)$:

(A1) For each $t \geq t_0$, $S(t)$ is a non-empty, closed and $r-$prox-regular subset of $I\!R^n$.

(A2) $S(\cdot)$ varies in a locally AC way, i.e. there exists a locally AC function $v(\cdot)$ such that for any $y \in I\!R^n$ and $s, t \geq t_0$

$$|d(y, S(t)) - d(y, S(s))| \leq |v(t) - v(s)|,$$

where $d(y, S) = \inf\{\| y - x \| \mid x \in S\}$.

These properties will be used in the paper and recalled when needed. Now we can formulate a well-posedness results for (8) under the assumption that $S(\cdot)$ varies in an AC manner.

Theorem 2 *[29, Theorem 1] Let $S(\cdot)$ satisfy assumptions* **(A1)** *and* **(A2)**. *Let $f : I \times I\!R^n \to I\!R^n$ be a separately measurable map on $I = [t_0, t_1]$ with $t_1 < +\infty$ such that*

- *For every $\eta > 0$ there exists a non-negative function $k_\eta(\cdot) \in \mathcal{L}^1(I, I\!R)$ such that for all $t \in I$ and for any $(x, y) \in B(0, \eta) \times B(0, \eta)$ one has $||f(t, x) - f(t, y)|| \leq k_\eta(t)||x - y||$;*
- *there exists a non-negative function $\beta(\cdot) \in \mathcal{L}^1(I, I\!R)$ such that, for all $t \in I$ and for all $x \in \bigcup_{s \in I} S(s)$, $||f(t, x)|| \leq \beta(t)(1 + ||x||)$.*

Then for any $x_0 \in S(t_0)$ the inclusion (8) has a unique AC solution $x(\cdot)$ on I. □

The first condition is a kind of local Lipschitz continuity property in the second variable of $f(\cdot, \cdot)$ and the second condition is a natural growth condition. In case $t_1 = \infty$ then the theorem provides a result on the existence and uniqueness of a locally AC solution in a straightforward manner (in which $k_\eta(\cdot)$ and $\beta(\cdot)$ become $\mathcal{L}^1_{loc}$-functions).

We will also formulate a third well-posedness result that includes the possibility that $S(\cdot)$ varies in a locally pAC and a locally RCBV manner and consequently, jumps in the solutions might occur. We will start by presenting certain characterizations of the state jumps. Let $\mu(\cdot) = d(var_S)(\cdot)$ be the differential measure associated with $var_S(\cdot)$ and assume that in case $S(t)$ is r-prox-regular for each $t \geq t_0$ that

$$\sup_{s \in [t_0, +\infty)} \mu(\{s\}) < \frac{r}{2}. \tag{9}$$

Loosely speaking, the interpretation of the condition (9) is that the jumps[1] in the set $S(\cdot)$ should be restricted to be sufficiently small (not larger than $\frac{r}{2}$). In case $S(t)$ is convex for each t, the condition (9) can be removed since $r = +\infty$. Under the condition of convexity or r-prox regularity together with (9), the meaning of the inclusion (7) at an atom of dx (a jump in $x(\cdot)$) is given by the projection [54, 2, 17]

$$x(t^+) = \text{prox}[S(t^+); x(t^-)], \text{ i.e. } x(t^+) = \text{argmin}_{z \in S(t^+)} \|z - x(t^-)\| \tag{10}$$

with an equivalent characterization as

$$x(t^+) \in S(t^+) \text{ and } x(t^+) - x(t^-) \in -N(S(t^+); x(t^+)). \tag{11}$$

These characterizations are well-defined as a $r-$prox-regular set $S(t^+)$ is such that all the points that satisfy $d(x, S(t^+)) < r$ have a unique projection on $S(t^+)$, as we mentioned in section 2.1. Note that convex sets have this property for any $r > 0$.

[1] Continuity of multivalued mappings is the continuity w.r.t. the Hausdorff distance. Let $\{\tau_n\}_{n \in I\!N}$ be a sequence that converges to $\tau \geq t_0$ with $\tau_n \geq t_0$. Continuity of $S(\cdot)$ at s means that $\text{haus}(S(\tau_n), S(\tau)) \to 0$ as $n \to +\infty$ [26, p.15]. The multivalued mapping $S : [t_0, +\infty) \to I\!R^n; t \mapsto S(t)$ is said to jump at τ if it is not continuous at τ.

The well-posedness result, which we will present for time-dependent sets $S(\cdot)$ that may vary in a locally AC, a locally pAC or a locally RCBV manner, is based on [17]. To apply this result, we consider sets $S(t) \subset I\!R^n$ that take only polyhedral values as given by

$$S(t) = \{x \in I\!R^n \ \mid \ Mx + Nu(t) + F \geq 0\} \tag{12}$$

for some matrices M, N and vector F of appropriate dimensions, and a function of time $u(\cdot)$. The inequalities in (12) are interpreted componentwise.

Theorem 3 *Consider (7) with $f(t,x) = Ax + Bu(t)$, where the constant matrices A and B are of appropriate dimensions. Moreover, assume that $S(t)$ is polyhedral as in* (12) *and non-empty for each $t \in [t_0, +\infty)$.*

- *If $u : [t_0, +\infty) \to I\!R^m$ is locally AC, then the perturbed sweeping process in* (7) *has a unique locally AC solution on $[t_0, +\infty)$ for each initial condition $x(t_0) = x_0 \in S(t_0)$.*
- *If $u : [t_0, +\infty) \to I\!R^m$ is locally pAC, then the perturbed sweeping process in* (7) *has a unique locally pAC solution on $[t_0, +\infty)$ for each initial condition $x(t_0) = x_0 \in S(t_0)$.*
- *If $u : [t_0, +\infty) \to I\!R^m$ is locally RCBV, then the perturbed sweeping process in* (7) *has a unique locally RCBV solution on $[t_0, +\infty)$ for each initial condition $x(t_0) = x_0 \in S(t_0)$.*

□

The proof of this result will be given in the appendix. Interestingly, the above result also provides uniqueness results in larger function classes. For instance, if $u(\cdot)$ is locally AC (and thus also locally pAC and locally RCBV), (7) has a locally AC solution (due to the first statement) that is unique in the class of locally pAC and unique in the class of locally RCBV functions (due to the second and third statement, respectively, of Theorem 3). Similar statements hold for the case of locally pAC input functions. This is one of the reasons why it is of interest to introduce a general framework based on RCBV solutions, as we did in this section. Another reason is that we provide a general framework that paves the way to several extensions (including RCBV solutions, r-prox regular sets, general nonlinear DIs as in (2), etc.). However, in the remainder of this paper, we will mainly focus on locally AC and locally pAC input functions $u(\cdot)$, because, firstly, these classes of inputs are rich enough for most applications and, secondly, it keeps the treatment below deprived of additional technicalities, which would blur the main contributions and message of the paper.

Remark 1 *Many other well-posedness results exist in the mathematical literature for DIs of the form $\dot{x}(t) \in F(t, x(t))$, see e.g. [68, 32, 9, 26, 53, 62] and the references therein. For instance, $F : I\!R \hookrightarrow I\!R$ represents a sign multifunction as in figure 2b, i.e. $\rho(z) = \mathit{sign}(z)$, where*

$$\mathit{sign}(z) = \begin{cases} \{1\}, & \text{when } z > 0, \\ [-1, 1], & \text{when } z = 0, \\ \{-1\}, & \text{when } z < 0, \end{cases}$$

then the maximally monotone approach as presented in this paper can be followed, but also the Filippov's approach [32] or the dedicated results for linear relay systems as in [53, 62] may be used to obtain existence and uniqueness of locally AC solutions. However, the conditions in [53, 62] are solely valid for the sign function, while the conditions in [32] typically require bounded and convex values of the multivalued map. These conditions are satisfied for the sign-function, but not necessarily for the range of systems considered here, see figures 2c and 2d. □

3 Problem statement

Two main classes of multifunctions $\varrho(\cdot,\cdot)$ in (2) will be considered in this paper. They correspond to sections 2.2 and 2.3, respectively. The rationale behind these choices is the need for existence and uniqueness results, for the observer dynamics (as will be explained in section 3.3 in more detail).

3.1 Time-independent multifunction

Consider the system (1) as in figure 1, where a time-independent multivalued map $\rho(\cdot)$ is in the feedback loop, which yields the following DI

$$\begin{cases} \dot{x}(t) = Ax(t) - Gw(t) + Bu(t) \\ \\ w(t) \in \rho(Hx(t)) \\ \\ y(t) = Cx(t), \quad x(0) = x_0 \in \mathrm{dom}(\rho \circ H), \end{cases} \tag{13}$$

where $A \in \mathbb{R}^{n\times n}$, $B \in \mathbb{R}^{n\times m}$, $G \in \mathbb{R}^{n\times l}$, $H \in \mathbb{R}^{l\times n}$ and $C \in \mathbb{R}^{p\times n}$. Moreover, we assume that G has full column rank, the mapping $\rho : \mathbb{R}^l \hookrightarrow \mathbb{R}^l$ is maximally monotone and $u(\cdot)$ is locally AC. All the examples mentioned in the introduction (see figure 2) fit within this framework. Note that (13) can be equivalently written as

$$\begin{cases} -\dot{x}(t) + Ax(t) + Bu(t) \in G\rho(Hx(t)) \\ \\ y(t) = Cx(t), \quad x(0) = x_0 \in \mathrm{dom}(\rho \circ H), \end{cases} \tag{14}$$

which is closer to the DI formulations as used in sections 2.2 and 2.3.

Remark 2 *Certain multivalued mappings $\rho(\cdot)$ that are not monotone, can be transformed into monotone mappings by using loop transformation techniques (see for instance [16, §3.10] [74, §5.6.2]). An example of such a mapping is given in [39], where a new mapping is defined, as $\tilde{\rho}(z) = \rho(z) - Mz$, where M is a matrix of appropriate dimensions, chosen so that the mapping $\tilde{\rho}(\cdot)$ is monotone. If we then replace the system matrix A in* (13) *by $\tilde{A} = A - GMH$, we obtain a system* (13) *with a monotone mapping in the feedback path that is equivalent to the original system.* □

To make the observer design meaningful, it is natural to assume that the system (14) whose state $x(\cdot)$ is to be observed, allows solutions for all relevant initial states and input functions.

Assumption 1 *The system in (14) possesses a locally AC solution $x(\cdot)$ on $[0, +\infty)$ for any $x(0) \in \mathrm{dom}(\rho \circ H)$ and locally AC input functions $u(\cdot)$.* □

Such conditions can be verified by results in the mathematical literature on DIs [68, 32, 9, 26]. Also Theorem 1 can be used of which an illustration will be given in section 3.4.

3.2 Time-dependent multifunction

Let us consider (1) for a time-dependent multifunction $\varrho(t, x) = \partial\psi_{S(t)}(Hx) = N(S(t); Hx)$, where $S(t) \subset I\!R^l$ is a set that varies in a locally AC manner and $u(\cdot)$ is also locally AC. This means that the considered multivalued system is

$$\begin{cases} -\dot{x}(t) + Ax(t) + Bu(t) \in GN(S(t); Hx(t)) \\ \\ y(t) = Cx(t), \quad Hx(0) = Hx_0 \in S(0). \end{cases} \tag{15}$$

In case the variation in $S(\cdot)$ is not locally AC, but only locally pAC, the solutions may have jumps and (15) has to be rewritten as a measure differential inclusion:

$$\begin{cases} -dx + Ax(t)dt + Bu(t)dt \in GN(S(t); Hx(t)) \\ \\ y(t) = Cx(t), \quad Hx(0) = Hx_0 \in S(0). \end{cases} \tag{16}$$

Similarly, as for the time-independent multivalued systems, we adopt the following assumption.

Assumption 2 *The system in (15) (resp.* (16)*) possesses a locally AC (resp. pAC) solution on* $[0, +\infty)$ *for any* $x(0)$ *with* $Hx_0 \in S(0)$ *and locally AC (resp. pAC) functions* $u(\cdot)$ *and* $S(\cdot)$. □

As we shall see later (e.g. in the proof of Lemma 3), the time-dependency of the set $S(\cdot)$ appearing in the observer structures may stem from the time-variation in the multivalued map of the observed system itself, but might also originate from the (extended) observer structure.

3.3 Observer structures

The first proposed observer ("basic" observer scheme) for the system (13) has the following form:

$$\begin{cases} \dot{\hat{x}}(t) = (A - LC)\hat{x}(t) - G\hat{w}(t) + Ly(t) + Bu(t) \\ \\ \hat{w}(t) \in \rho(H\hat{x}(t)), \end{cases} \tag{17}$$

where $L \in \mathbb{R}^{n\times p}$ is the observer gain and $H\hat{x}(0) \in \mathrm{dom}(\rho)$. The second proposed observer ("extended" observer scheme) has the following form:

$$\begin{cases} \dot{\hat{x}}(t) = (A - LC)\hat{x}(t) - G\hat{w}(t) + Ly(t) + Bu(t) \\ \\ \hat{w}(t) \in \rho((H - KC)\hat{x}(t) + Ky(t)), \end{cases} \tag{18}$$

where $L \in \mathbb{R}^{n\times p}$ and $K \in \mathbb{R}^{l\times p}$ are the observer gain and $\hat{x}(0)$ is such that $(H - KC)\hat{x}(0) + Ky(0) \in \mathrm{dom}(\rho)$. The basic observer is a special case of the extended observer with $K = 0$. The idea of the extended observer was also used for Lipschitz continuous (single-valued) systems in [8].

Similar observer structures also apply to the systems in the form (15) or (16) by replacing $\rho(\cdot)$ in (17) and (18) by $N(S(t), \cdot)$, which leads in the most general case to the extended observer given by

$$-d\hat{x} + (A - LC)\hat{x}(t)dt + Bu(t)dt + Ly(t)dt \in GN(S(t); (H - KC)\hat{x}(t) + Ky(t)). \tag{19}$$

Problem 1 *The problem of observer design consists in finding the gain* L *for the basic observer or the gains* L *and* K *for the extended observer, which will guarantee that*

[Observer well-posedness *] for each solution* $x(\cdot)$ *to the observed plant (either* (13) *or* (16)*) there exists a unique solution* $\hat{x}(\cdot)$ *to the observer dynamics on* $[0, \infty)$*, and*

[Asymptotic state recovery *]* $\hat{x}(\cdot)$ *asymptotically recovers* $x(\cdot)$*, i.e.* $\lim_{t\to\infty}[\hat{x}(t) - x(t)] = 0$.

□

Remark 3 *As we only assume the existence of solutions in Assumptions 1 and 2, it might be the case that the observed plant (*(13) *or* (16)*) allows for multiple solutions given an initial condition* $x(0) = x_0$*. However, as the solution trajectory* $x(\cdot)$ *is input to the observers* (17) *and* (18) *through the measured output* $y(\cdot)$*, the observer dynamics has different terms in the right-hand-side corresponding to the different solutions. Indeed, let* $x^a(\cdot)$ *and* $x^b(\cdot)$ *be two solutions to the observed plant for* $x(0) = x_0$ *and let* $y^a(\cdot) = Cx^a(\cdot)$ *and* $y^b(\cdot) = Cx^b(\cdot)$ *be the corresponding outputs. When the observer dynamics produces unique solutions given an initial condition and given the driving inputs* $u(\cdot)$ *and* $y(\cdot)$*, as imposed in Problem 1, the observer has for each individual solution trajectory of the observed plant a unique response. To be more precise, for initial condition* $\hat{x}(t_0) = \hat{x}_0$ *and external inputs* $u(\cdot)$ *and* $y(\cdot)$*, where the latter can be* $y(\cdot) = y^a(\cdot) = Cx^a(\cdot)$ *or* $y(\cdot) = y^b(\cdot) = Cx^b(\cdot)$*, the observer has two* different *solutions, say* $\hat{x}^a(\cdot)$ *and* $\hat{x}^b(\cdot)$*, respectively. The problem definition above should be interpreted in the sense that it requires in this case that both* $\lim_{t\to\infty}[\hat{x}^a(t) - x^a(t)] = 0$ *and* $\lim_{t\to\infty}[\hat{x}^b(t) - x^b(t)] = 0$*. In essence, this is not different than for observer design for linear or smooth nonlinear systems with unique trajectories given an initial condition and exogenous inputs: the observer just recovers asymptotically the state that corresponds to the input and output trajectories that are actually fed to it.*

By allowing for non-uniqueness of trajectories for the observed plant, a much larger class of DIs is covered by the results in this paper, if compared to the case where the uniqueness assumption would be enforced. From a practical point of view, the given interpretation is meaningful as well, because the actual physical plant typically behaves according to only one of the possible solutions as allowed by the model (for instance, due to the presence of small disturbances in practice). □

In case of the observer design, it is desirable that the observer provides a unique state estimate of the specific (possibly non-unique) solution the system is actually following. A reason for requiring uniqueness of the estimated state trajectories is the ease of implementation of such an observer (i.e. one does not need a selection algorithm that picks a trajectory out of the non-unique trajectories). Moreover, in case the implementation is based on time-discretizations of the DIs, uniqueness of solutions is a desirable property [1, 19, 27] as it is often used to guarantee the convergence of the numerical scheme. Hence, in the case of observer design well-posedness (including the uniqueness property) is of importance, although the observed system itself is allowed to have multiple solutions (see Remark 3 above). Solutions $\hat{x}(\cdot)$ of the observers (17) and (18) can be obtained using some of the numerical methods for solving DIs, see e.g. [1, 19, 27]. For particular time-discretization methods suitable for the sweeping process, see [1, 54], and for LCS, see [19].

Although the basic observer is much more natural and closer to the observer structures for linear systems, there exist multivalued systems as in (1) for which no basic observer can be constructed by the design procedure given below, but one can find an extended observer. The reason is that the design of the observer will be based on rendering $(A - LC, G, H)$ strictly passive for the basic observer or $(A - LC, G, H - KC)$ strictly passive for the extended observer. The example below indicates that for certain systems it is possible to achieve the latter, but not the former. This justifies the study for the extended observer scheme.

Example 1 *Consider the following matrices:*

$$A = \begin{pmatrix} 1 & 0 \\ 0 & -1 \end{pmatrix};\ C = (1\ 0);\ G = (1\ 0)^\top;\ H = (0\ 1). \tag{20}$$

As A is unstable, the triple (A, G, H) is not (strictly) passive by itself. If we try to find a matrix L such that $(A - LC, G, H)$ is strictly passive, we have to satisfy

$$-(A - LC)^\top P - P(A - LC) \succ 0, P = P^\top \succ 0 \text{ and } G^\top P = H$$

for some matrix P. Since the condition $G^\top P = H$ requires $(1\ 0)P = (0\ 1)$, we can conclude that the first row of P must be equal to $(0\ 1)$ in this case, which obstructs the positive definiteness of P. Hence, one cannot make $(A - LC, G, H)$ strictly passive by suitable choice of L. Consequently, we will not be able to find a basic observer using the results below. However, with $L = (2\ 0)^\top$ and $K = -1$, we get $A - LC = -I_2$ and $H - KC = (1\ 1)$. Since the matrix $P = \begin{pmatrix} 1 & 1 \\ 1 & 2 \end{pmatrix}$ is positive definite and symmetric and satisfies $Q := -(A-LC)^\top P - P(A-LC) \succ 0$ and $G^\top P = H - KC$, $(A - LC, G, H - KC)$ is strictly passive and an extended observer can be designed using the procedures presented in the next sections. □

The reason for treating the basic and the extended observers separately is that the well-posedness conditions for the two proposed observers are significantly different and also have a strong influence on the type of multifunction that may be considered, i.e. on the observed system. Indeed, in the case of considering system (13) with $\rho(\cdot)$ time-independent and adopting the basic observer, the observer dynamics contains time-independent multivalued functions, where the theory of section 2.2 applies. The other cases yield observer dynamics with time-dependent multivalued functions, which requires the theory of section 2.3. Also, the well-posedness proofs are more readable if the cases are treated separately. Asymptotic recovery of the state will be treated only for the case of the extended observer, as the result for the basic observer follows then immediately as a special case (by setting $K = 0$).

3.4 Linear complementarity systems

To illustrate the applicability of the presented framework we zoom in on the class of linear complementarity systems (LCS) that include various applications such as switched electrical circuits, constrained mechanical systems,

piecewise linear systems, projected dynamical systems as used in economics and so on, see e.g. [15, 35, 21, 38, 20, 47, 40, 71, 13, 37] and the references therein. A subclass of LCS fitting in the framework of the current paper is given by

$$\dot{x}(t) = Ax(t) + Gw(t) + Bu(t) \tag{21a}$$

$$z(t) = Hx(t) + Eu(t) + F \tag{21b}$$

$$0 \leq w(t) \perp z(t) \geq 0 \tag{21c}$$

with $z(t), w(t) \in I\!R^l$ and $\perp$ denotes the orthogonality between vectors in the sense that $w \perp z$ means $\langle w, z\rangle = w^\top z = 0$. Moreover, the inequalities above have to be interpreted componentwise. The combination of the inequalities and the orthogonality condition yield that for all $i \in \{1, \ldots, l\}$ we have for each time t that $w_i(t) = 0$ or $z_i(t) = 0$. This means that for each $i \in \{1, \ldots, l\}$ we have a characteristic as in figure 2c between z_i and w_i and hence, this fits the multivalued Lur'e type systems as considered in (1) and figure 1. Using the equivalence

$$0 \leq a \perp b \geq 0 \iff -a \in N(K; b) \tag{22}$$

with $K = (I\!R^+)^k$ and $a, b \in I\!R^k$ that holds when $b \in K$, one can rewrite (21) as

$$-\dot{x}(t) + Ax(t) + Bu(t) \in GN(K; z(t)) \tag{23}$$

from which it follows by using Lemma 1 that

$$-\dot{x}(t) + Ax(t) + Bu(t) \in GN(S(t); Hx(t)) \tag{24}$$

with $S(t) \triangleq \{v \in I\!R^l \mid v + Eu(t) + F \geq 0\} \subset I\!R^l$, that fits within (15). Note that by Definition 2 solutions to DIs of the form (24) satisfy $Hx(t) \in S(t)$ (and thus in terms of (23) $z(t) \in K$) for all $t \geq 0$ and hence, the equivalence in (22) (which is valid for $b \in K$) can indeed be used to show that (23) and (21) are equivalent representations.

Let us assume that there exists a symmetric positive definite matrix T such that $G^\top T = H$ and that G has full column rank. This is, for instance, true when (A, G, H) is strictly passive as the solution P of (5) satisfies $G^\top P = H$. Using now the state transformation $\xi = Rx$, where $R = T^{\frac{1}{2}}$ is the symmetric positive definite square root of T, we obtain from (24) that

$$-\dot{\xi}(t) + RAR^{-1}\xi(t) + RBu(t) \in RGN(S(t); HR^{-1}\xi(t)) = N(S'(t); \xi(t)) \tag{25}$$

with $S'(t) \triangleq \{\xi \in I\!R^n \mid HR^{-1}\xi + Eu(t) + F \geq 0\}$. In the last equality of (25) we used the fact that $N(S'(t); \xi) = RGN(S(t); HR^{-1}\xi)$ due to $(RG)^\top = HR^{-1}$, full column rank of G and Lemma 1. This leads to the perturbed sweeping process formulation as in (7). The non-emptyness of $S'(t)$ is guaranteed for each $t \geq 0$, because $S(t)$ is trivially non-empty for each t and $HR^{-1} = (RG)^\top$ has full row rank due to invertibility of R and full column rank of G. Hence, global existence and uniqueness of a locally AC (locally pAC or locally RCBV) solution for each $\xi(0) = \xi_0 \in S'(0)$ is assured for any $u(\cdot)$ being locally AC (locally pAC, respectively) by Theorem 3. Consequently, the existence and uniqueness of locally AC (or locally pAC) solutions to (21) for $x(0) = x_0$ with $H(x_0) \in S(0)$ and input signal $u(\cdot)$ being locally AC (locally pAC, respectively) is guaranteed . In other words, Assumption 1 or Assumption 2 can be verified for this class of LCS using this reasoning.

Observe that in case $E = 0$ the set $S'(\cdot)$ becomes time-independent and hence, the corresponding multivalued mapping in the right-hand-side of (13) is time-independent as well. In this case one could also opt to resort to the fundamentals based on maximally monotone mappings given in section 2.2 to prove well-posedness of the LCS. In case $E \neq 0$, the set $S'(t)$ is time-dependent and we have to proceed via the results given before. Observe that the set $S'(t)$ may jump when $E \neq 0$ at points where $u(t)$ has discontinuities (i.e. when $u(\cdot)$ is locally pAC, but not locally AC). In this case state trajectories of the system may exhibit discontinuities as well.

Example 2 *A circuit that consists of an ideal diode, a current source and an inductor, mounted in parallel, has the dynamics*

$$\begin{cases} \dot{x}(t) = w(t) \\ 0 \leq z(t) \perp w(t) \geq 0 \\ z(t) = x(t) + u(t), \end{cases} \tag{26}$$

which can easily be rewritten, using the reasoning above, as the inclusion $-\dot{x}(t) \in N(S(t); x(t))$ *with* $S(t) = \{x \in I\!R \mid x + u(t) \geq 0\}$. *Let* $u(\cdot)$ *be locally pAC. Then the inclusion has to be rewritten as a measure differential inclusion as in (7) leading to* $-dx \in N(S(t); x(t))$. *In particular, if we apply the pAC input (current)* $u(\cdot)$ *to the circuit with* $u(t) = 0$ *for* $t < 1$ *and* $u(t) = -1$ *for* $t \geq 1$ *with initial condition* $x(0) = 0$, *the solution trajectory is equal to* $x(t) = 0$, $t < 1$ *and* $x(t) = 1$ *for* $t \geq 1$. *Hence,* $x(\cdot)$ *is pAC and exhibits a jump at* $t = 1$. *In this case* (10) *is satisfied at the atom* $\{1\}$ *(at time* 1*) of* dx *as* $S(t^+) = \{x \in I\!R \mid x \geq 1\}$ *and* $x(t^+) = 1 = \text{argmin}_{z \in S(t^+)} \|z\|$. □

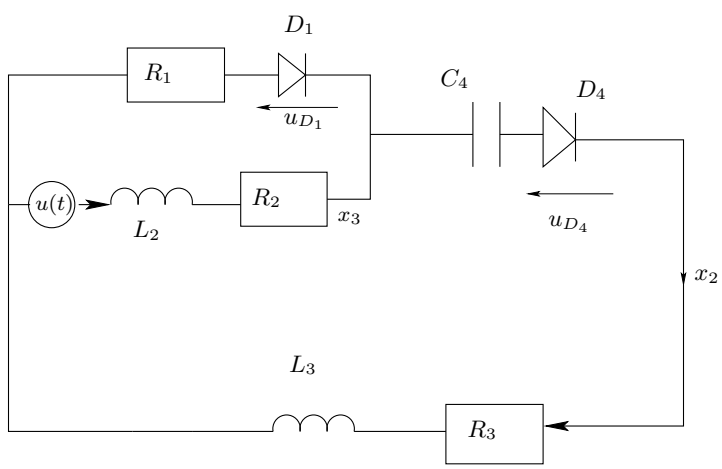

Figure 3: A circuit with ideal diodes.

Example 3 *As a more involved example of an electrical circuit we may consider figure 3, with* $R_1, R_2, R_3 \geq 0$, $L_2, L_3 > 0$, $C_4 > 0$. *One has* $0 \leq -u_{D_4} \perp x_2 \geq 0$ *and* $0 \leq -u_{D_1} \perp -x_3 + x_2 \geq 0$, *where* u_{D_4} *and* u_{D_1} *are the voltages across the diodes. The dynamical equations of this circuit are the following ones*

$$\begin{cases} \dot{x}_1(t) = x_2(t) \\ \dot{x}_2(t) = -\left(\frac{R_1+R_3}{L_3}\right) x_2(t) + \frac{R_1}{L_3} x_3(t) - \frac{1}{L_3 C_4} x_1(t) + \frac{1}{L_3}\zeta_1(t) + \frac{1}{L_3}\zeta_2(t) + \frac{u(t)}{L_3} \\ \dot{x}_{3(t)} = -\left(\frac{R_1+R_2}{L_2}\right) x_3(t) + \frac{R_1}{L_2} x_2(t) - \frac{1}{L_2}\zeta_1(t) + \frac{u(t)}{L_2} \\ 0 \leq \begin{pmatrix} \zeta_1(t) \\ \zeta_2(t) \end{pmatrix} \perp \begin{pmatrix} -x_3(t) + x_2(t) \\ x_2(t) \end{pmatrix} \geq 0, \end{cases} \tag{27}$$

where x_1 *is the time integral of the current across the capacitor,* x_2 *is the current through the inductor* L_3, *and* x_3 *is the current through the inductor* L_2 *and resistor* R_2, $-\zeta_1$ *is the voltage across the diode* D_1 *and* $-\zeta_2$ *is the voltage across the diode* D_4. *The system in (27) can be written compactly as* $\dot{x}(t) = Ax(t) + Gw(t) + Bu(t)$,

$0 \leq w(t) \perp z(t) = Hx(t) \geq 0$, *where* (A, G, H) *is a strictly passive triple. The corresponding set* $S'(t)$ *in (25) is clearly not time-dependent for this case and consequently, the system fits within (14).* □

Another important class of dynamical systems within the presented framework (with connections to complementarity systems [41, 14]) are so-called projected dynamical systems (PDS) [57, 28], which have applications in oligopolistic markets and traffic networks (see [57, 28]), in the modeling of crowd motions [55] and in constrained control problems [47].

Example 4 *Let* $S \in I\!R^n$ *be a non-empty closed convex set. Consider the PDS*

$$\dot{x}(t) = \mathit{proj}_{T_S(x(t))}(Ax(t) + Bu(t)), \tag{28}$$

where $T_S(x)$ *denotes the tangent cone* $\{z \in I\!R^n \mid \langle z, x\rangle \leq 0$ *for all* $z \in N(S; x)\}$. *Roughly speaking, the dynamics of the PDS is* $\dot{x}(t) = Ax(t) + Bu(t)$ *as long as the motion remains inside* S *(for instance, when the state is in the interior of* S*) and the dynamics is "corrected" once the dynamics points outside* S *(and the state is on the boundary of* S*). This correction is done by "projecting the vector field onto* S*," such that the trajectories remain inside* S*. In [41, 14] it is shown that this is equivalent to the inclusion*

$$-\dot{x}(t) + Ax(t) + Bu(t) \in N(S; x(t)) \tag{29}$$

that fits within (14) with $G = I_n$ *and* $\rho(\cdot) = N(S; \cdot)$. □

4 Main results

In this section we will prove that if the gains L and K are chosen such that the triple $(A - LC, G, H)$ (respectively $(A - LC, G, H - KC)$) is strictly passive, then the obtained observer (17) ((18), respectively) will satisfy the requirements mentioned in Problem 1. To compute the gains L and K such that $(A - LC, G, H - KC)$ is strictly passive, one can solve the matrix (in)equalities:

$$\begin{array}{l} -(A - LC)^\top P - P(A - LC) \succ 0 \\ P = P^\top \succ 0 \\ G^\top P = H - KC, \end{array} \tag{30}$$

where Q in (5) can then be taken as $Q := -(A - LC)^\top P - P(A - LC)$. Condition (30) is a linear matrix inequality (LMI) in P, K, $L^\top P$, which can be efficiently solved. For necessary and sufficient conditions for the existence of solutions to (30), see for instance [8].

4.1 Time-independent multifunction

This section is devoted to study observers for the system (13) (or equivalently (14)).

4.1.1 Observers well-posedness

To prove that strict passivity of $(A - LC, G, H - KC)$ guarantees the proper behavior of the observer, we start with two lemmas on well-posedness. We will start with the case $K = 0$ (the basic observer)

Lemma 2 [Time-independent $\rho(\cdot)$, basic observer, AC solutions] *Consider the system* (13) *and the basic observer* (17). *We assume that the triple* $(A - LC, G, H)$ *is strictly passive,* G *has full column rank and that Assumption 1 holds. Let* $u(\cdot)$ *be a locally AC input function and* $x(\cdot)$ *a corresponding locally AC solution to* (13) *with output trajectory* $y(\cdot)$ *for some* $x(0) \in \mathrm{dom}(\rho \circ H)$. *Then the corresponding observer dynamics* (17) *has a unique locally AC solution on* $[0, \infty)$ *for any initial state* $\hat{x}(0) \in \mathrm{dom}(\rho \circ H)$. □

Proof: Since the triple $(A - LC, G, H)$ is strictly passive and G has full column rank there exist positive definite and symmetric matrices P and Q that satisfy (5) with $K = 0$. Applying the change of variables

$$\xi = R\hat{x}, \tag{31}$$

where $R = P^{\frac{1}{2}}$, transforms (17) into:

$$\begin{cases} \dot{\xi}(t) = R(A - LC)R^{-1}\xi(t) - RG\hat{w}(t) + RBu(t) + RLy(t) \\ \\ \hat{w}(t) \in \varrho(HR^{-1}\xi(t)). \end{cases} \tag{32}$$

Since $H\hat{x}(0) \in \mathrm{dom}(\rho)$, we have $HR^{-1}\xi(0) \in \mathrm{dom}(\rho)$. Define the mapping $\beta : \mathbb{R}^n \hookrightarrow \mathbb{R}^n$ as $\beta(\xi) = R^{-1}H^\top\rho(HR^{-1}\xi)$. Using the strict passivity condition that yields $G^\top P = H$, (32) can be rewritten as

$$\dot{\xi}(t) \in R(A - LC)R^{-1}\xi(t) - \beta(\xi(t)) + RBu(t) + RLy(t), \tag{33}$$

where $\xi(0) \in \mathrm{dom}(\beta)$. From the strict passivity condition (5) (with $K = 0$) and the full column rank of G, it follows that $H = G^\top P$ and $HR^{-1} = G^\top R$ have full row rank. Together with the fact that $\rho(\cdot)$ is maximally monotone we have that $\beta(\cdot)$ is maximally monotone as well due to Lemma 1. From the strict passivity condition (30) it follows that $R^{-1}(A - LC)^\top R + R(A - LC)R^{-1}$ is negative definite, which means that the mapping $\xi \mapsto -R(A - LC)R^{-1}\xi$ is monotone by definition. Maximality of the mapping $\xi \mapsto -R(A - LC)R^{-1}\xi$ follows from linearity, see [12, Proposition 2.3]. Hence, the mapping $\xi \mapsto -R(A - LC)R^{-1}\xi + \beta(\xi)$ is maximally monotone as the sum of maximally monotone mappings is maximally monotone again [67, Corollary 12.44]. Since the signal $u(\cdot)$ is locally AC, and $y(\cdot)$ is locally AC due to Assumption 1, existence and uniqueness of locally AC solutions to (33) and (17) follow from Theorem 1. □

Remark 4 *The state transformation $\xi = Rx$ performed in the above proof is instrumental to obtain well-posedness for the observer dynamics in this paper. It will play an important role in the other well-posedness proofs and also for the study of the asymptotic recovery of the state (in particular for the case when discontinuities in the state are present). Performing state space transformations is common practice in observer design for nonlinear systems [33, 18, 49, 50]. It is expected that the material developed in this paper may extend to nonlinear vector fields and output functions, where the KYP lemma for strictly passive systems should be replaced by its nonlinear counterpart [16, Section 4.5], yielding observers with possibly nonlinear state-dependent gains. However, at this point, these developments are quite premature.* □

In the following lemma we address the question of well-posedness of the extended observer scheme. Since in this case the multivalued mapping in (18) is *time-dependent*, we will consider a particular class of mappings $\rho(\cdot)$ that corresponds to section 2.3. Actually, in this case it will turn out that the second and third condition in (30), i.e. the existence of a symmetric positive definite matrix P such that $G^\top P = H - KC$ suffices to prove well-posedness.

Lemma 3 [Time-independent $\rho(\cdot) = N(S;\cdot)$, extended observer, AC solutions, S polyhedron] *Consider the system* (13) *and the extended observer* (18) *with $\rho(\cdot) = N(S;\cdot)$, where the set $S \subset I\!R^l$ is assumed to be a non-empty polyhedron as in* (12) *with $N = 0$, i.e. $S = \{z \in I\!R^l \mid Mz + F \geq 0\}$. Suppose that Assumption 1 holds and assume that there exists a symmetric positive definite matrix P such that $G^\top P = H - KC$ and G has full column rank. Let the signal $u(\cdot)$ be locally AC and let $x(\cdot)$ be a corresponding locally AC solution to* (13) *with output trajectory $y(\cdot)$ for some $x(0)$ with $Hx(0) \in S$. Then the corresponding observer dynamics* (18) *has a unique locally AC solution on $[0, \infty)$ for each $\hat{x}(0)$ with $(H - KC)\hat{x}(0) + Ky(0) \in S = \mathrm{dom}(\rho)$.* □

Proof: Let us introduce the change of variable (31) for (18), where as before, $R = P^{\frac{1}{2}}$. In the same way as in the proof of Lemma 2, (18) is transformed into:

$$\dot{\xi}(t) \in R(A - LC)R^{-1}\xi(t) - R^{-1}(H - KC)^\top\varrho((H - KC)R^{-1}\xi(t) + Ky(t)) + RBu(t) + RLy(t). \tag{34}$$

Let $S'(t) = \{\xi \in I\!R^n \mid (H-KC)R^{-1}\xi + Ky(t) \in S\} \subset I\!R^n$. Since G has full column rank l, $(H-KC)R^{-1} = G^\top R$ has full row rank l. As S is non-empty by the hypothesis, this implies that $S'(t)$ is non-empty for each t. Indeed, S is a subset of $I\!R^l$ and the full row rank of $(H-KC)R^{-1}$ implies that for any $l-$dimensional vector z of S one can find at least one ξ such that $(H-KC)R^{-1}\xi = z - Ky(t)$. Consider now $N(S'(t); x)$. By applying Lemma 1 (for fixed t) we obtain that $N(S'(t); \xi) = R^{-1}(H-KC)^\top N(S, (H-KC)R^{-1}\xi + Ky(t))$. Therefore one can rewrite (34) as

$$-\dot{\xi}(t) + R(A-LC)R^{-1}\xi(t) - RBu(t) - RLy(t) \in N(S'(t); \xi(t)), \tag{35}$$

where $\xi(0) = R\hat{x}(0) \in S'(0)$. The description (35) fits within (8) with $S'(t) = \{\xi \in I\!R^n \mid M(H-KC)R^{-1}\xi + Ky(t) + F \geq 0\}$ of the form (12). Since $u(\cdot)$ and $y(\cdot)$ are locally AC, the result follows now from Theorem 3. □

4.1.2 Asymptotic recovery of the state

The following theorem states one of the main results of the paper.

Theorem 4 *Consider the observed system* (13) *and either the basic observer* (17) *or the extended observer* (18)*, where* $(A-LC, G, H)$ *or* $(A-LC, G, H-KC)$*, respectively, is strictly passive with corresponding positive definite and symmetric matrices* P *and* Q *satisfying* (5)*. Assume also that the additional conditions of Lemma 2 or Lemma 3, respectively, are satisfied. Let* $x(\cdot)$ *be a locally AC solution to* (13) *for* $x(0) \in \mathrm{dom}(\rho \circ H)$ *and locally AC input* $u : [0, +\infty) \to I\!R^m$*. Then the observer* (17) *or* (18)*, respectively, has for each* $\hat{x}(0)$ *with* $H\hat{x}(0) \in \mathrm{dom}(\rho)$ *or* $(H-KC)\hat{x}(0) + Ky(0) \in \mathrm{dom}(\rho) = S$*, respectively, a unique locally AC solution* $\hat{x}(\cdot)$*, which exponentially recovers the state* $x(\cdot)$ *in the sense that the observation error* $e(t) := x(t) - \hat{x}(t)$ *satisfies the exponential decay bound*

$$\|e(t)\| \leq \sqrt{\frac{\lambda_{max}(P)}{\lambda_{min}(P)}}\|e(0)\| \exp\left(-\frac{\lambda_{min}(Q)}{2\lambda_{max}(P)}t\right) \tag{36}$$

for $t \in I\!R_+$. □

Proof: Using Lemma 2 or Lemma 3 for the basic and extended observer, respectively, it follows that for each locally AC solution to the observer plant (13), the observer also has a locally AC solution $\hat{x}(\cdot)$ provided $H\hat{x}(0) \in \mathrm{dom}(\rho)$ or $(H-KC)\hat{x}(0) + Ky(0) \in \mathrm{dom}(\rho) = S$, respectively. Hence, the observation error $e(\cdot) = x(\cdot) - \hat{x}(\cdot)$ is also locally AC and satisfies (for the extended observer (18)) almost everywhere the error dynamics, obtained by subtracting (13) and (18):

$$\dot{e}(t) = (A-LC)e(t) - G(w(t) - \hat{w}(t)) \tag{37a}$$

$$w(t) \in \rho(Hx(t)) \tag{37b}$$

$$\hat{w}(t) \in \rho(Hx(t) - (H-KC)e(t))). \tag{37c}$$

We consider now the candidate Lyapunov function $V(e) = \frac{1}{2}e^\top Pe$. Since $e(\cdot)$ is locally AC, $V(\cdot)$ is also locally AC, and the derivative $\dot{V}(e(\cdot))$ exists almost everywhere. The function $\dot{V}(e(\cdot))$ satisfies almost everywhere

$$\begin{aligned} \dot{V}(e(t)) &= e^\top(t)P\dot{e}(t) \\ &= e^\top(t)P((A-LC)e(t) - G(w(t) - \hat{w}(t))) \\ &= -\tfrac{1}{2}e^\top(t)Qe(t) - e^\top(t)(H-KC)^\top(w(t) - \hat{w}(t)) \end{aligned} \tag{38}$$

for some $w(\cdot), \hat{w}(\cdot)$ satisfying (37b),(37c). Since

$$e^\top(t)(H-KC)^\top(w(t) - \hat{w}(t)) = \langle Hx(t) - \{(H-KC)\hat{x}(t) + Ky(t)\}, w(t) - \hat{w}(t)\rangle$$

with $w(t) \in \rho(Hx(t))$ and $\hat{w}(t) \in \rho(H\hat{x}(t)+K(y(t)-\hat{y}(t)))$, it follows from monotonicity of $\rho(\cdot)$ that $e^\top(t)(H-KC)^\top(w(t)-\hat{w}(t)) \geq 0$. Note that in case of the extended observer and thus under the conditions of Lemma 3, that $\rho(\cdot) = N(S;\cdot)$ is also monotone. Therefore,

$$\dot{V}(e(t)) \leq -\frac{1}{2}e^\top(t)Qe(t). \tag{39}$$

As $e^\top Qe \geq \lambda_{min}(Q)e^\top e \geq \frac{\lambda_{min}(Q)}{\lambda_{max}(P)}e^\top Pe = \frac{2\lambda_{min}(Q)}{\lambda_{max}(P)}V(e)$ for all $e \in I\!R^n$, we have that

$$\dot{V}(e(t)) \leq -\frac{\lambda_{min}(Q)}{\lambda_{max}(P)}V(e(t)). \tag{40}$$

Clearly, this implies that

$$\lambda_{min}(P)\|e(t)\|^2 \leq V(e(t)) \leq \exp\left(-\frac{\lambda_{min}(Q)}{\lambda_{max}(P)}t\right)V(e(0)) \leq \lambda_{max}(P)\exp\left(-\frac{\lambda_{min}(Q)}{\lambda_{max}(P)}t\right)\|e(0)\|^2.$$

This proves the exponential recovery of the state. The condition (36) is now obtained by taking the square root of the inequality above. The case of the basic observer follows as a special case of the reasoning above by taking $K = 0$. □

Remark 5 *Extensions of Theorem 4 to more general systems of the form*

$$\begin{cases} \dot{x}(t) = Ax(t) - Gw(t) + Bu(t) \\ w(t) \in \rho(Hx(t) - Dw(t) + Eu(t)) \\ y(t) = Cx(t) \end{cases} \tag{41}$$

with observers of the type

$$\begin{cases} \dot{\hat{x}}(t) = (A-LC)\hat{x}(t) - G\hat{w}(t) + Ly(t) + Bu(t) \\ \hat{w}(t) \in \rho((H-KC)\hat{x}(t) + Ky(t) - D\hat{w}(t) + Eu(t)) \end{cases} \tag{42}$$

are possible, provided the well-posedness of the observer (42) *can be guaranteed. Indeed, suppose that* (41) *has a locally AC solution $x(\cdot)$ with $x(0) = x_0$ and some input $u(\cdot)$ and that $\hat{x}(\cdot)$ is a locally AC solution to* (42) *for some initial observer state $\hat{x}(0)$ and driving inputs $u(\cdot)$ and $y(\cdot) = Cx(\cdot)$. Moreover, assume that $\rho(\cdot)$ is monotone and that the quadruple $(A-LC, G, H-KC, D)$ is rendered strictly passive in the sense that there exist positive definite and symmetric matrices P and Q such that the matrix inequality*

$$\begin{pmatrix} -(A-LC)^\top P - P(A-LC) - Q & -PG + (H-KC)^\top \\ -G^\top P + (H-KC) & D + D^\top \end{pmatrix} \succeq 0 \tag{43}$$

holds. The latter condition is the generalization of (5) *defining strict passivity of the linear system*

$$\dot{x}(t) = Ax(t) + Bw(t) \tag{44a}$$
$$z(t) = Cx(t) + Dw(t) \tag{44b}$$

(see [16]). Indeed, for $D = 0$ the existence of symmetric $P \succ 0$ and $Q \succ 0$ such that (43) *holds reduces to the same matrices satisfying* (5)*. Under these conditions, a similar reasoning as in the proof of Theorem 4 applies to conclude $\lim_{t\to\infty}[x(t)-\hat{x}(t)] = 0$. Hence, this indicates that establishing well-posedness is the crucial step in the extension of the obtained results. In particular cases, by assuming additional structure on the multivalued mapping $\varrho(\cdot)$, dedicated well-posedness results (e.g. for LCS [15, 35, 21, 38, 20, 40, 71, 13, 37], for linear relay systems [32, 53, 62], or for DIs attaining bounded, non-empty and convex values using upper semicontinuity conditions on the multivalued map [32, 9, 26]) may be applied. Such extensions are clearly of interest as they would allow the consideration of further applications within the domain of LCS such as certain switched electrical circuits (that often lead to models as in* (41) *with $D \neq 0$ or G not full column rank). However, if no additional structure is imposed on $\rho(\cdot)$, section 2.2 and section 2.3 present general well-posedness results, which require D to be the zero*

matrix. As the stability results can be extended easily, it is of interest to study the extensions of the well-posedness results for these systems to enlarge the domain of applicability even further. Clearly, the theory developed here already applies to a broad range of applications in mechanics, electrical engineering, control engineering and economics and moreover, forms a basis for further developments for nonlinear vector fields and output functions. □

4.2 Time-dependent multifunctions

Let us now deal with systems, where the multifunction in the right-hand-side is time-dependent. More specifically, we will consider $\varrho(x,t) = \partial\psi_{S(t)}(Hx(t)) = N(S(t); Hx(t))$, $S(t) \subset I\!R^l$, where $S(\cdot)$ satisfies either assumptions **(A1)**, and **(A2)** or satisfies locally pAC or RCBV conditions and taking polyhedral values as in (12). We consider the system in (16) and we study the extended observer dynamics given by the measure differential inclusion (19). We use the formulation in terms of a measure differential inclusion, because we anticipate for $S(\cdot)$ being locally pAC or RCBV implying that it is expected that the solutions $x(\cdot)$ and $\hat{x}(\cdot)$ will jump.

4.2.1 Observer well-posedness

We have the following well-posedness result:

Lemma 4 [Time-dependent $\rho(\cdot,\cdot) = N(S(\cdot);\cdot)$, extended observer, AC/pAC/RCBV solutions, $S(\cdot)$ polyhedral values] *Consider the system (16) such that Assumption 2 holds. Suppose there exists a symmetric positive definite matrix P such that $G^\top P = H - KC$, G is of full column rank and $S(t)$ is non-empty and polyhedral as in* (12) *for each $t \geq 0$ with $u(\cdot)$ being locally AC (resp. locally pAC, resp. locally RCBV). Let $x(\cdot)$ be a corresponding locally AC (resp. locally pAC, resp. locally RCBV) solution to* (16) *with output trajectory $y(\cdot)$ for some $x(0)$ with $Hx(0) \in S(0)$. Then the corresponding observer dynamics (19) has a unique locally AC (resp. locally pAC, resp. locally RCBV) solution on $[0,+\infty)$ for initial condition $\hat{x}(0)$ with $(H-KC)\hat{x}(0) + Ky(0) \in S(0)$.* □

The proof of this lemma relies on Theorem 3. Once the state transformation $\xi = R\hat{x}$ as in (31) is performed, one gets an inclusion similar to (35) with $S'(t) = \{z \in I\!R^n \ \mid \ M(H-KC)z + MKy(t) + Nu(t) + F \geq 0\}$, which for each $t \geq 0$ is non-empty, because $S(t)$ is non-empty and $H - KC = G^\top P$ has full row rank. As the line of reasoning is similar as before, we omit the proof for brevity. For the basic observer, we can derive the following lemma, that applies for more general time-dependent sets $S(t)$, that are not necessarily polyhedral as in (12).

Lemma 5 [Time-dependent $\rho(\cdot,\cdot) = N(S(\cdot);\cdot)$, basic observer, AC solutions, general $S(\cdot)$] *Consider the system in (16) such that Assumption 2 holds and the observer (19) with $K = 0$. Suppose there exists a symmetric positive definite matrix P such that $G^\top P = H$, G is of full column rank, $u(\cdot)$ is locally AC and $S(\cdot)$ satisfies* **(A1)** *and* **(A2)**. *Let $x(\cdot)$ be a corresponding locally AC solution to* (16) *with output trajectory $y(\cdot)$ for some $x(0)$ with $Hx(0) \in S(0)$. Then, the corresponding observer dynamics (19) has a unique locally AC solution on $[0,+\infty)$ for initial condition $\hat{x}(0)$ with $H\hat{x}(0) \in S(0)$.* □

Proof: From Assumption 2, $y(\cdot)$ is locally AC. From $G^\top P = H$ and the variable change $\xi = Rx$ as in (31), and using Lemma 1, one deduces that (19) can be recast into (8), where the conditions of Theorem 2 apply. □

To emphasize the result of Lemma 5, in case $K = 0$ (basic observer) the set $S(t)$ needs not be polyhedral, but merely $r-$prox-regular. It is noteworthy that relaxing the convexity to $r-$prox regularity may become necessary when in (2) nonlinear vector fields and output functions $z = h(x)$, $y = c(x)$ are considered, because convexity is often a too stringent assumption in the nonlinear case.

Remark 6 *It is quite possible that by adapting [30, Theorem 3.1] the locally pAC or even the locally RCBV case be treated and Lemma 5 extended to solutions that are locally pAC or locally RCBV. However, uniqueness of solutions may not be obtained in this manner as [30, Theorem 3.1] is merely an existence theorem. Also the condition (9) must be added in such a case.* □

4.2.2 Asymptotic recovery of the state

We focus on the locally pAC case with $S(t)$ a non-empty and polyhedral time-dependent set as in (12) for each $t \geq 0$. Using that both (16) and (19) have locally pAC solutions $x(\cdot)$ and $\hat{x}(\cdot)$, respectively, under the assumptions of Lemma 4, the observation error $e := x - \hat{x}$ exists on $[0, +\infty)$, is locally pAC as well and satisfies the measure differential inclusion

$$\begin{cases} -de + (A - LC)e(t)dt \in G\left\{N(S(t); (H - KC)x(t) + Ky(t)) - N(S(t); (H - KC)\hat{x}(t) + Ky(t))\right\} \\ e(0) = x(0) - \hat{x}(0),\ Hx(0) \in S(0), (H - KC)\hat{x}(0) + KCx(0) \in S(0). \end{cases} \tag{45}$$

Before studying the stability, we will characterize the jumps in e.

Lemma 6 *Assume that $(A - LC, G, H - KC)$ is strictly passive and that the conditions of Lemma 4 are satisfied. Let $x(\cdot)$ be a locally pAC solution to* (16) *with $y(\cdot)$ a corresponding output trajectory for some $x(0)$ with $Hx(0) \in S(0)$ and some locally pAC input $u(\cdot)$. Let the corresponding (unique) locally pAC solution to the observer dynamics (19) for some initial condition $\hat{x}(0)$ with $(H - KC)\hat{x}(0) + Ky(0) \in S(0)$ be given by $\hat{x}(\cdot)$. Then the error dynamics* (45) *satisfies at the atoms of the differential measure de:*

$$e(t^+) = R^{-1}\mathit{prox}[S'(t^+); Rx(t^-)] - R^{-1}\mathit{prox}[S'(t^+); R\hat{x}(t^-)], \tag{46}$$

where $R = P^{\frac{1}{2}}$ with $P \succ 0$ the solution of the strict passivity condition (30) *and the set $S'(t)$ is given by $\{\xi \in I\!R^n \mid (H - KC)R^{-1}\xi + Ky(t) \in S(t)\} \subset I\!R^n$. Moreover,*

$$e^\top(t^+)Pe(t^+) \leq e^\top(t^-)Pe(t^-). \tag{47}$$

□

Proof: The system (16) can be transformed into

$$-d\xi + R(A - LC)R^{-1}\xi(t)dt + RBu(t)dt + RLy(t)dt \in N(S'(t); \xi(t)) \tag{48}$$

with the coordinate change $\xi = Rx$. Similarly the observer (19) can be transformed into

$$-d\hat{\xi} + R(A - LC)R^{-1}\hat{\xi}(t)dt + RBu(t)dt + RLy(t)dt \in N(S'(t); \hat{\xi}(t)) \tag{49}$$

with the change of coordinates $\hat{\xi} = R\hat{x}$. At atoms we have $dt = 0$ and $de = e(t^+) - e(t^-)$. Using (10) we obtain that $\xi(t^+) = \text{prox}[S'(t^+); \xi(t^-)]$ and $\hat{\xi}(t^+) = \text{prox}[S'(t^+); \hat{\xi}(t^-)]$. Since $e(t^+) = x(t^+) - \hat{x}(t^+) = R^{-1}(\xi(t^+) - \hat{\xi}(t^+))$ equation (46) follows.

If we use in addition the equivalent characterization (11) for the projections, we obtain that $\xi(t^-) = \xi(t^+) + n(t)$ with $n(t) \in N(S'(t^+); \xi(t^+))$ and $\hat{\xi}(t^-) = \hat{\xi}(t^+) + \hat{n}(t)$ with $\hat{n}(t) \in N(S'(t^+); \hat{\xi}(t^+))$. Using these decompositions, we obtain

$$\|\xi(t^-) - \hat{\xi}(t^-)\|^2 = \|\xi(t^+) - \hat{\xi}(t^+)\|^2 + 2\langle \xi(t^+) - \hat{\xi}(t^+), n(t) - \hat{n}(t)\rangle + \|n(t) - \hat{n}(t)\|^2 \geq \|\xi(t^+) - \hat{\xi}(t^+)\|^2,$$

as the inner product is nonnegative due to the definition of normal cones. Using $e = x - \hat{x} = R^{-1}(\xi - \hat{\xi})$ and $P = R^\top R$, it follows that $e^\top(t^+)Pe(t^+) \leq e^\top(t^-)Pe(t^-)$ as in (47). □

Now characterizations for the discontinuities in e are available, exponential recovery of the state by the observer can be proven.

Theorem 5 *Consider the system (16) such that Assumption 2 holds. Assume that the extended observer in (19) is such that the triple $(A - LC, G, H - KC)$ is strictly passive with corresponding positive definite and symmetric matrices P and Q satisfying* (5)*, G is of full column rank and $S(t)$ is non-empty and polyhedral as in* (12) *for each $t \geq 0$ with $u(\cdot)$ a locally pAC input function. Let $x(\cdot)$ be a locally pAC solution to* (16) *with $y(\cdot)$ a corresponding*

output trajectory for some $x(0)$ with $Hx(0) \in S(0)$ and the locally pAC input $u(\cdot)$. Then the corresponding observer dynamics (19) has for each initial condition $\hat{x}(0)$ with $(H - KC)\hat{x}(0) + Ky(0) \in S(0)$ a unique locally pAC solution $\hat{x}(\cdot)$, which exponentially recovers the state $x(\cdot)$ in the sense that the observation error $e(t) := x(t) - \hat{x}(t)$ satisfies the exponential decay bound

$$\|e(t)\| \leq \sqrt{\frac{\lambda_{max}(P)}{\lambda_{min}(P)}}\|e(0)\| \exp\left(-\frac{\lambda_{min}(Q)}{2\lambda_{max}(P)}t\right) \tag{50}$$

for $t \in I\!R_+$. □

Proof: Consider as in the proof of Theorem 4 the candidate Lyapunov function $V(e) = \frac{1}{2}e^\top Pe$, where P and Q are positive definite and symmetric matrices satisfying (5). Since $e(\cdot)$ is locally pAC, so is $V(e(\cdot))$. Recall that Moreau's rule for the subdifferentiation of quadratic functions of locally RCBV functions (and thus also of locally pAC functions) yields $dV = (e^+ + e^-)^\top Pde$ [54, p.8]. At atoms of de (jumps of e) the function $V(e(\cdot))$, which is locally pAC, satisfies $dV = (e^+ + e^-)^\top P(e^+ - e^-) = (e^+)^\top Pe^+ - (e^-)^\top Pe^-$. Using (47) it follows that at atoms of de one gets $dV \leq 0$. Since the multivalued mappings $N(S(t); \cdot)$ are monotone for each t and locally pAC functions have a countable set of jump times (actually a finite number of jump times in each finite length time interval), it follows that the inequality (40) is valid almost everywhere. To be precise, (40) holds on $[0, +\infty)$ except at times where e is discontinuous and times where $V(e(\cdot))$ is not differentiable. This proof is now completed by using the inequality (40) together with $dV \leq 0$ (implying $V(t^+) \leq V(t^-)$ for all $t \geq 0$) in a similar manner as in the proof of Theorem 4. □

The result in Theorem 5 shows that we developed observers for systems with state jumps, a topic on which not many results are available in the literature. Of course, in absence of jumps (e.g. when we have locally AC solutions), the above result also applies. The convexity of the sets $S(t)$ is convenient to assure the monotonicity of the normal cones considered as multivalued mappings, for each t. In case the sets are $r-$prox-regular but not convex as in Lemma 5, the monotonicity has to be replaced by the hypomonotonicity property. Further characterizations of the solutions (see e.g. the second part of [29, Theorem 1] in which upperbounds on $\| \dot{x}(t) + f(t, x(t)) \|$ are computed as functions of $\beta(\cdot)$ in Theorem 2 and $v(\cdot)$ in **(A2)** are needed in order to prove the asymptotic recovery of the state in such a case. Relaxing the convexity to the $r-$prox-regularity for the asymptotic recovery of the state is not considered in the current paper due to space limitations and the fact that in this case only local results are obtained. However, note that in case of r-prox regular sets the well-posedness of the observer was proven in Lemma 5 for locally AC inputs $u(\cdot)$.

5 Stabilization of multivalued systems

In the previous sections we have considered the observer design problem under the assumption that the input $u(\cdot)$ was some admissible exogenous function of time. In this section we are interested in the stabilization of the DIs under study using output-based controllers. The approach we will take is based on the combination of a state feedback control $u(t) = Mx(t)$ in which the state vector $x(t)$ is replaced by an estimated stated $\hat{x}(t)$ obtained by one of the proposed observers. In other words, we are adopting a *certainty equivalence* controller of the form $u(t) = M\hat{x}(t)$, where $M \in I\!R^{m\times n}$ is a constant matrix gain, and $\hat{x}(t)$ is the state of the observer at time $t \geq 0$. This means that we have to consider the interconnection of the observed system and of the observer through this particular input and assess the well-posedness and the stability of the resulting closed loop. This section will provide a discussion on how the separation principle may apply to the considered class of nonsmooth, nonlinear systems. In particular, two separation principles will be presented.

5.1 State feedback

We start with a result for the system (13) in case the complete state variable x is measured. Hence, we can use a state feedback controller of the form

$$u(t) = Mx(t). \tag{51}$$

The closed-loop system consisting of (13) and (51) can be written as

$$\begin{cases} \dot{x}(t) = (A+BM)x(t) - Gw(t) \\ w(t) \in \rho(Hx(t)) \\ x(0) = x_0 \in \mathrm{dom}(\rho \circ H). \end{cases} \tag{52}$$

Definition 3 *The system* (52) *is called* globally exponentially stable*, if*

[Deadlock free *] for all $x_0 \in \mathrm{dom}(\rho \circ H)$ a locally AC solution $x(\cdot)$ exists on $[0, +\infty)$ with $x(0) = x_0$, and*

[Exponential decay *] there exist $\mu > 0$ and $\sigma > 0$ such that all $x_0 \in \mathrm{dom}(\rho \circ H)$ and all corresponding locally AC solutions $x(\cdot)$ with initial condition $x(0) = x_0$ satisfy*

$$\|x(t)\| \leq \sigma \|x_0\| e^{-\mu t} \tag{53}$$

for all $t \in I\!R_+$.

□

Two observations regarding this definition are in order. First of all, note that the "deadlock free" condition states that the closed-loop system (52) is not a trivial closed-loop system without trajectories for the initial states of interest. Secondly, this definition does not necessarily include uniqueness of solutions given an initial condition, but merely existence, although certain uniqueness properties will be proven below. Moreover, the restriction to locally AC solutions of (52) in Definition 3 (instead of for instance, locally pAC solutions) is natural as there are no external inputs in (52), which may cause discontinuities in the state trajectory.

In an analogous manner as in the proofs of Lemma 2 and Theorem 4, the following result can be obtained.

Theorem 6 *Consider the system* (52) *with $0 \in \rho(0)$ and $\rho(\cdot)$ being maximal monotone. Assume that $(A + BM, G, H)$ is strictly passive and G has full column rank. Then the system* (52) *has a unique locally AC solution for each $x(0) = x_0 \in \mathrm{dom}(\varrho \circ H)$ and the system is globally exponentially stable in the sense of Definition 3.* □

5.2 Separation principle: dynamic output feedback

Let us consider the system (13) and the extended observer (18). As proven in section 4.1.2 the observer recovers the state exponentially. Inserting $u(t) = M\hat{x}(t)$ in the dynamics (13) and (18), yields

$$\begin{pmatrix} \dot{x}(t) \\ \dot{e}(t) \end{pmatrix} = \underbrace{\begin{pmatrix} A+BM & -BM \\ 0 & A-LC \end{pmatrix}}_{=:A_{cl}} \begin{pmatrix} x(t) \\ e(t) \end{pmatrix} - \underbrace{\begin{pmatrix} G & 0 \\ G & -G \end{pmatrix}}_{=:G_{cl}} \begin{pmatrix} w(t) \\ \hat{w}(t) \end{pmatrix} \tag{54a}$$

$$\begin{pmatrix} z(t) \\ \hat{z}(t) \end{pmatrix} = \underbrace{\begin{pmatrix} H & 0 \\ H & -H+KC \end{pmatrix}}_{H_{cl}} \begin{pmatrix} x(t) \\ e(t) \end{pmatrix} \tag{54b}$$

$$\begin{pmatrix} w(t) \\ \hat{w}(t) \end{pmatrix} \in \phi(z(t), \hat{z}(t)), \tag{54c}$$

where $\phi : I\!R^l \times I\!R^l \to I\!R^{2l}$, with $\phi(z, \hat{z}) \triangleq \begin{pmatrix} \rho(z) \\ \rho(\hat{z}) \end{pmatrix}$. In the following we denote $\xi(t) = \begin{pmatrix} x(t) \\ e(t) \end{pmatrix}$, $\bar{w}(t) = \begin{pmatrix} w(t) \\ \hat{w}(t) \end{pmatrix}$, $\bar{z}(t) = H_{cl}\xi(t)$. Thus $\bar{w}(t) \in \phi(\bar{z}(t))$. The closed-loop system can then be rewritten as the DI

$$-\dot{\xi}(t) + A_{cl}\xi(t) \in G_{cl}\phi(H_{cl}\xi(t)). \tag{55}$$

In order to analyze the stability and the well-posedness of the closed-loop system, one can follow a direct approach by trying to design K, L and M simultaneously such that the triple (A_{cl}, G_{cl}, H_{cl}) as in (54) is strictly passive. In this case one could rely on Theorem 6 to show that closed-loop system is well-posed and is globally exponentially stable. The more interesting case is to find situations in which a *separation principle* holds, as this has the advantage that the observer and the state feedback gain can be designed independently and possibly with less conservative conditions as strict passivity of the overall closed-loop system. In the current setting we are interested in the following separation principle.

Problem 2 *Given*

- *a well-posed observer based on strict passivity of* $(A-LC, G, H-KC)$ *that recovers the state exponentially, and*
- *a state feedback as in* (51) *resulting in a globally exponentially stable closed-loop system* (52) *by rendering* $(A+BM, G, H)$ *strictly passive as in Theorem 6.*

Establish global exponential stability of the closed-loop system (54) *in the sense of Definition 3 (included deadlock freeness).* □

5.2.1 Closed-loop stability

The stability can be obtained on the general level, once the well-posedness of the closed-loop (54) is established. This is evidenced by the following result.

Theorem 7 *Consider the system* (54) *and assume that* $(A+BM, G, H)$ *and* $(A-LC, G, H-KC)$ *are both strictly passive and G has full column rank. Let* $0 \in \rho(0)$*. Moreover, we assume that the system has for each initial state* $(x_0^\top, e_0^\top)^\top \in$ *dom*$(\phi \circ H_{cl})$ *a locally AC solution on* $[0, \infty)$*. Then the closed-loop system* (54) *is globally exponentially stable.* □

Proof: Since $(A+BM, G, H)$ is strictly passive, there exist symmetric matrices $P_x \succ 0$ and $Q_x \succ 0$ such that (5) holds. Similarly, for $(A-LC, G, H-KC)$ one can find symmetric matrices $P_e \succ 0$ and $Q_e \succ 0$. The proof will now be based on finding a $\beta > 0$ such that $V_\beta(x,e) = x^\top P_x x + \beta e^\top P_e e$ is a Lyapunov function for (54) for some $\beta > 0$. Note that the $(x^\top, e^\top)^\top$-part is locally AC and hence, almost everywhere differentiable. As consequence, we can differentiate V_β along each such solution trajectory leading to (we omit the dependence on t for brevity)

$$\begin{aligned}\dot{V}_\beta(x,e) &= 2x^\top(A+BM)^\top P_x x - 2e^\top M^\top B^\top P_x x - 2w^\top G^\top P_x x + 2\beta e^\top P_e((A-LC)e - 2\beta G(w-\hat{w})) \\ &< -x^\top Q_x x - 2e^\top M^\top B^\top P_x x - 2w^\top H x - \beta e^\top Q_e e - 2\beta e^\top (H-KC)^\top (w-\hat{w}) \\ &\leq -x^\top Q_x x - 2e^\top M^\top B^\top P_x x - \beta e^\top Q_e e\end{aligned} \tag{56}$$

almost everywhere with w , $\hat{w}$ satisfy $w \in \rho(Hx)$ and $\hat{w} \in \rho(Hx + (KC-H)e)$. Note that in the second step we used the matrix inequality (5a) and the equality (5b). In the last step we used monotonicity of $\rho(\cdot)$ twice and the fact that $0 \in \rho(0)$. Since $P_x \succ 0$ and $P_e \succ 0$, we can bound $\dot{V}_\beta(x,e)$ further as

$$\dot{V}_\beta(x,e) < -\alpha\|x\|^2 - \beta\delta\|e\|^2 + 2\gamma\|e\|\|x\| = -\begin{pmatrix}\|x\| \\ \|e\|\end{pmatrix}^\top \begin{pmatrix}\alpha & -\gamma \\ -\gamma & \beta\delta\end{pmatrix}\begin{pmatrix}\|x\| \\ \|e\|\end{pmatrix}$$

for $\alpha = \lambda_{min}(Q_x) > 0$, $\delta = \lambda_{min}(Q_e) > 0$ and some $\gamma > 0$ depending on $M^\top B^\top P_x$. To have V_β as a Lyapunov function for some $\beta > 0$, it suffices to find a $\beta > 0$ such that the matrix

$$\begin{pmatrix}\alpha & -\gamma \\ -\gamma & \beta\delta\end{pmatrix} \in I\!R^{2\times 2}$$

is positive definite. Since the matrix is symmetric, only the leading principal minors α and $\alpha\beta\delta - \gamma^2$ have to be positive definite. For any β sufficiently large, this is achieved and the corresponding V_β is a Lyapunov function showing the global exponential stability of the closed-loop system (54). □

5.2.2 Closed-loop well-posedness

As was the case for the extensions to the observer design results (cf. Remark 5), the proof of well-posedness, or at least the existence of solutions to the closed-loop system (54) given appropriate initial conditions is more difficult than the stability proof.

We will consider here the case where we take $\rho(\cdot) = N(S;\cdot)$ for a polyhedral set S of the form (12) with the matrix $N = 0$, and where we take the basic observer ($K = 0$). Hence, $\rho(\cdot)$ is time-independent. We aim now at proving well-posedness via the reasoning as adopted in section (21) and thus using the existence of a symmetric and positive definite matrix S such that $SG_{cl} = H_{cl}^\top$. Using strict passivity of $(A + BM, G, H)$ and $(A - LC, G, H)$, we obtain the existence of a positive definite and symmetric matrix P (either equal to P_x or P_e) with $PG = H^\top$. By straightforward calculations it is easy to see that

$$\underbrace{\begin{pmatrix} 2P & -P \\ -P & P \end{pmatrix}}_{=:\bar{P}} G_{cl} = H_{cl}^\top. \tag{57}$$

As $\bar{P}$ is positive definite and symmetric, we can use the reasoning in section 3.4 together with Theorem 7 to obtain the following result.

Theorem 8 *Let the two triples $(A + BM, G, H)$ and $(A - LC, G, H)$ be strictly passive and let $\rho(\cdot) = N(S;\cdot)$ with S of the form* (12) *with the matrix $N = 0$. Then the closed-loop system in (54) with $K = 0$ (basic observer) has a unique locally AC solution on $[0, +\infty)$ for each $(x_0^\top, e_0^\top)^\top$ with $H_{cl}(x_0^\top, e_0^\top) \in \mathrm{dom}(\phi)$. In addition,* (54) *is globally exponential stable.* □

It is important to remark that Theorem 8 proves a separation principle for the case with $K = 0$ and a normal cone in the feedback loop. For the extended observer ($K \neq 0$), we will provide a separation principle in the next section.

5.3 Time-dependent multifunctions

The case of time-dependent multifunctions given by normal cones to time-dependent sets $S(\cdot)$ may be split into two subcases:

(i) when the multifunction does not depend on the input $u(\cdot)$ but on some exogenous signal, and

(ii) when it depends explicitly on $u(\cdot)$, i.e. $S(t) = S(u(t))$.

In the first case, a similar analysis as in the previous section applies, provided the mappings $t \mapsto S(t)$ have suitable properties (like convexity for each t). Case (ii) is encountered for instance in (21) when $E \neq 0$. From (15) and (18) the closed-loop system then is

$$\begin{cases} -\dot{x}(t) + Ax(t) + BM\hat{x}(t) \in GN(S(M\hat{x}(t)); Hx(t)) \\ -\dot{\hat{x}}(t) + (A - LC + BM)\hat{x}(t) + LCx(t) \in GN(S(M\hat{x}(t)); (H - KC)\hat{x}(t) + KCx(t)). \end{cases} \tag{58}$$

It is apparent from (58) that the study of case **(ii)** departs significantly from what has been done above, because the inclusion in (58) is a state-dependent perturbed sweeping process that does not fit within any of the inclusions of section 2.3. To the best of our knowledge, there is no result on existence of solutions for this type of state-dependent sweeping processes in the literature. Our stabilization problem therefore opens the analysis of a novel class of DIs that require extensions of [52].

However, for the particular case of linear complementarity systems, as discussed in section 3.4, we can derive a complete separation principle using dedicated results for complementarity systems (see also Remark 5). Below, we

will prove that the strict passivity conditions of $(A+BM,G,H)$ and $(A-LC,G,H-KC)$ suffice to guarantee a global exponentially stable closed-loop system (including deadlock freeness), that is now given by

$$\begin{aligned}\begin{pmatrix}\dot{x}\\ \dot{e}\end{pmatrix} &= A_{cl}\begin{pmatrix}x\\ e\end{pmatrix} + G_{cl}\begin{pmatrix}w\\ \hat{w}\end{pmatrix}\\ \begin{pmatrix}z\\ \hat{z}\end{pmatrix} &= H_{cl}\begin{pmatrix}x\\ e\end{pmatrix}\\ 0 \le \begin{pmatrix}w\\ \hat{w}\end{pmatrix} &\perp \begin{pmatrix}z\\ \hat{z}\end{pmatrix} \ge 0.\end{aligned} \tag{59}$$

Theorem 9 *Consider the closed-loop linear complementarity system* (59) *and suppose that the triples* $(A+BM,G,H)$ *and* $(A-LC,G,H-KC)$ *are strictly passive and* G *has full column rank. Then the system* (59) *allows locally AC solutions*[2] *on* $[0,\infty)$ *for any* $(x_0^\top,e_0^\top)^\top$ *with* $H_{cl}(x_0^\top,e_0^\top)^\top \ge 0$. *In addition, the system is globally exponentially stable.* □

Proof It can be verified that the matrix $\mathcal{M} := H_{cl}G_{cl} = \begin{pmatrix} HG & 0\\ KCG & (H-KC)G\end{pmatrix} \in I\!R^{2l\times 2l}$ is a so-called P-matrix [25, Def. 3.3.1] meaning that all its principal minors[3] are positive. To show this, note first that HG and $(H-KC)G$ are symmetric and positive definite. Now we use [25, Theorem 3.3.4] that states that a matrix $\mathcal{M}$ is a P-matrix if and only if all real eigenvalues of $\mathcal{M}$ and its principal submatrices are positive. Take $J \subseteq \{1,\dots,2l\}$ and partition the index set J in two sets $J_1 \subseteq \{1,\dots,l\}$ and $\bar{J}_2 \subseteq \{l+1,\dots,2l\}$ with $J_1 \cup \bar{J}_2 = J$. Let $J_2 \subseteq \{1,\dots,l\}$ be the index set $-l+\bar{J}_2 := \{i \mid i = j-l \text{ for some } j \in \bar{J}_2\}$. Let $v = (v_1^\top, v_2^\top)^\top \neq 0$ be an eigenvector of $\mathcal{M}_{JJ}$ for the real eigenvalue λ, i.e. $\mathcal{M}_{JJ}v = \lambda v$. This can be equivalently written as

$$\begin{pmatrix} H_{J_1\bullet}G_{\bullet J_1} & 0\\ H_{J_2\bullet}CG_{\bullet J_1} & (H_{J_2\bullet}-K_{J_2\bullet}C)G_{\bullet J_2}\end{pmatrix}\begin{pmatrix}v_1\\ v_2\end{pmatrix} = \lambda\begin{pmatrix}v_1\\ v_2\end{pmatrix}, \tag{60}$$

where we adopted for an arbitrary matrix $\mathcal{N} \in I\!R^{m\times m}$ the notation $\mathcal{N}_{J\bullet} := (\mathcal{N}_{ij})_{i\in J, j\in\{1,\dots,m\}}$ (submatrix of $\mathcal{N}$ that selects rows corresponding to indices in J) and $\mathcal{N}_{\bullet J} := (\mathcal{N}_{ij})_{i\in\{1,\dots,m\}, j\in J,}$ (selects columns in J). Equation (60) yields that $H_{J_1\bullet}G_{\bullet J_1}v_1 = \lambda v_1$. Since $H_{J_1\bullet}G_{\bullet J_1}$ is a principal submatrix of HG, which is positive definite and symmetric, $H_{J_1\bullet}G_{\bullet J_1}$ is also positive definite and symmetric and consequently, has only positive real eigenvalues. Hence, when $v_1 \neq 0$, we obtain $\lambda > 0$. In case $v_1 \neq 0$, it follows that v_2 cannot be equal to zero as otherwise v would be zero. Equation (60) together with $v_1 = 0$ yields that $(H_{J_2\bullet}-K_{J_2\bullet}C)G_{\bullet J_2}v_2 = \lambda v_2$. Since $(H_{J_2\bullet}-K_{J_2\bullet}C)G_{\bullet J_2}$ is positive definite and symmetric as it is a principal submatrix of $(H-KC)G$, it follows that also in this case λ must be positive. Hence, the matrix $\mathcal{M}$ is a P-matrix and the well-posedness conditions given in [40] apply. Under the conditions that the first non-zero Markov parameter $\mathcal{M} = H_{cl}G_{cl}$ is a P-matrix (in the terminology of [40]), local existence of a piecewise Bohl function (see [40] for more details) is guaranteed and this solution is locally AC (as state jumps can be excluded). Using now the continuation proof of [38, Theorem VII.2], it can be shown that this locally AC solution can be extended to be a global solution on $[0,\infty)$ and thus global existence of locally AC solutions is guaranteed. Due to Theorem 7, global exponential stability to (59) follows and the proof is complete. □

6 Numerical example

Let us illustrate the foregoing developments on a linear complementarity system as in (21) with the following data

$$A = \begin{pmatrix} 0.1 & 0.1\\ 0.3 & 0.1\end{pmatrix},\quad G = \begin{pmatrix}-1\\ 1\end{pmatrix},\quad B = \begin{pmatrix}1\\ 2\end{pmatrix},$$

[2] Moreover, the solutions are unique within the class of so-called piecewise Bohl functions, see [40] for more details.

[3] The principal minors of $\mathcal{M}$ are given by the determinants of its principal submatrices $\mathcal{M}_{JJ} := (\mathcal{M}_{ij})_{i\in J, j\in J}$ for subsets $J \subseteq \{1,\dots,2l\}$.

$$H = \begin{pmatrix} -1 & 1 \end{pmatrix}, \quad C = \begin{pmatrix} 2 & 2 \end{pmatrix}, \quad E = 1, \quad F = 0.$$

We will use the basic observer (17) with the gain $L = \begin{pmatrix} 0.1 \\ 0.1 \end{pmatrix}$ as this renders $(A - LC, G, H)$ strictly passive. Indeed, the LMI in (30) with $K = 0$ is satisfied with $P = I_2$ the identity matrix, since $A - LC = \begin{pmatrix} -0.1 & -0.1 \\ 0.1 & -0.1 \end{pmatrix}$ and thus $(A - LC) + (A - LC)^\top = \begin{pmatrix} -0.2 & 0 \\ 0 & -0.2 \end{pmatrix} < 0$. Moreover, $G^\top P = H$. Based on Theorem 5 this implies that the basic observer (19) recovers the state exponentially for all locally pAC input signals $u(\cdot)$ and all relevant initial conditions.

To illustrate the functioning of the observer, we will present simulations for the observed LCS and the observer using the initial data are $x_1(0) = 10$, $x_2(0) = 0$, $\hat{x}_1(0) = 0$, $\hat{x}_2(0) = 0$ and the input signal

$$u(t) = \begin{cases} 0 & \text{for } t \in [0, 1) \\ 5.2^{n+1}t + 5(1 - 2^{n+1}(3 - 2^{-n})) & \text{for } t \in [3 - 2^{-n+1}, 3 - 2^{-n}), \quad 0 \le n \le N, \\ f(t) & \text{for } t \ge 3 - 2^{-N} \end{cases}$$

where N is a finite integer, and

$$f(t) = \begin{cases} 0 & \text{for } t \in [3 - 2^{-N}, 3) \\ 5 & \text{for } t \in [3 + 2n, 4 + 2n), \quad n \ge 0 \\ -5 & \text{for } t \in [4 + 2n, 5 + 2n), \quad n \ge 0 \end{cases}$$

It is noteworthy that this function $u(\cdot)$ is locally pAC for any $N < +\infty$, which is allowed in our theoretical framework irrespective how large N is. In the simulations below we have chosen $N = 100$. Note also that discontinuities remain persistently present in the input function $u(\cdot)$ when time t progresses to infinity (see also figure 4). To compute the pAC solutions to both the plant and the observer (which are guaranteed to exist) we have used the SICONOS platform[4] [3]. In particular, we used a numerical integration routine based on Moreau's time-stepping algorithm [1]. A proof of convergence of this numerical scheme applied to perturbed sweeping processes with RCBV inputs (hence, including pAC inputs as considered here) can be found in [30].

In figure 4 we plotted next to the input function $u(\cdot)$ also the plant states $x_1(\cdot)$ and $x_2(\cdot)$ and the observer states $\hat{x}_1(\cdot)$ and $\hat{x}_2(\cdot)$. It can be seen, as guaranteed by the above theory, that the estimates $\hat{x}_i(\cdot)$ recover the states $x_i(\cdot)$, $i = 1, 2$ of the plant exponentially, even though jumps in both the plant and observer states are present. This can even be better seen in figure 5 in which we plotted the observer errors $e_i(\cdot) = x_i(\cdot) - \hat{x}_i(\cdot)$, $i = 1, 2$, which converge exponentially to zero. Note also the jumps that occur in $e_i(\cdot)$, $i = 1, 2$. Hence, these simulation results demonstrate the convergence of the observation error to zero, even though the input keeps on jumping persistently.

7 Conclusions

In this paper we presented the observer design for a class of multivalued systems consisting of Lur'e type systems with either a maximally monotone multivalued mapping or a normal cone to possibly time-dependent convex or $r-$prox-regular sets in the feedback path. As the considered class of systems is nonsmooth and multivalued, the existing literature on nonlinear observer design does not apply to this setting. We proposed two observer structures (the basic and the extended observer) and we carefully examined the existence and uniqueness of solutions given an initial condition and input function (well-posedness), as this is not a priori guaranteed. The well-posedness requirements has consequences on the type of multivalued systems that may be observed and the observer structures that can be used. The observer design is constructive in nature as it is based on rendering the linear part of the observation error dynamics strictly passive by choosing appropriate observer gains. Under the natural assumption

[4] http://siconos.gforge.inria.fr/

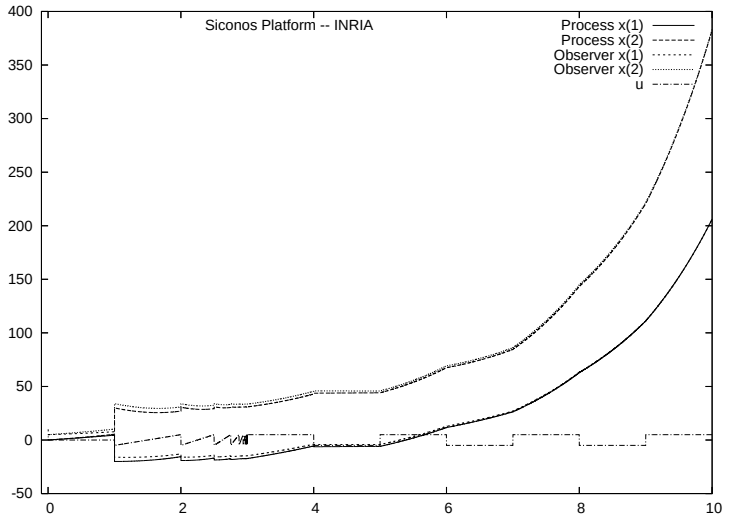

Figure 4: Input, process and observer states.

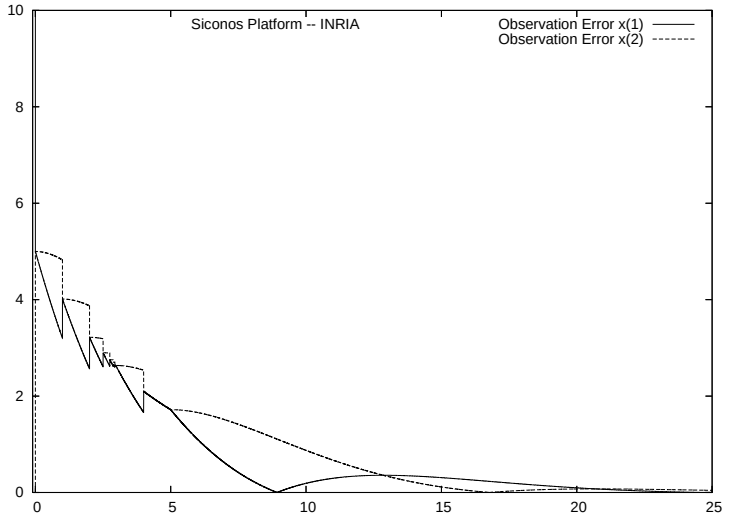

Figure 5: Observation errors.

that the observed system has a solution, when the control input belongs to a certain admissible class, it is shown that there exists a unique solution for the estimated state, and that the observer recovers the state of the original system exponentially. Particularly interesting is that these observers also work in case the multivalued system exhibits jumps (discontinuities) in its state variables. These type of results are rare in the literature.

Next to the observer design, we also consider the problem of designing output-based certainty equivalence controllers in which the estimated state by the observer is used in a state feedback law. We showed that once an observer and a state feedback can be designed by the procedures outlined in this paper, it is not difficult to prove global exponential stability of the closed-loop system provided that the closed-loop systems allows solutions (absence of deadlock). The question of well-posedness (or even the existence of solutions) turns out to be a much harder problem. Nevertheless, in case of the basic observer and a class of differential inclusions with normal cones we can prove a complete separation principle. In addition, for linear complementarity systems we could even formulate a separation principle using the extended observer.

Future work will involve an investigation of other classes of multivalued systems for which observers can be constructed and stabilizing output-based controllers can be designed. It is expected that the current work paves the way to observer design for inclusions with nonlinear vector field, and possibly complementarity Lagrangian systems that can be embedded into second order Moreau's sweeping process. Also the work on stabilization identified a class of new differential inclusions (sweeping processes with sets varying as a function of the state variable), that have not been considered in the mathematical literature before. As such, this paper also formulates open problems for this branch of mathematics.

A Appendix

Let us first state a technical lemma that is central in the well-posedness proofs.

Lemma 7 [65, p.760] *Let $S = \{x \in I\!R^n \mid Ax - b \in C_1, x \in C_2\}$ and $S' = \{x \in I\!R^n \mid Ax - b' \in C_1, x \in C_2\}$ be two given sets with A a matrix and b and b' vectors of appropriate dimensions and C_1 and C_2 non-empty closed convex sets, where $C_1 = \{z \mid Dz \geq 0\}$ for some matrix D. If S and S' are non-empty sets, there exists a constant δ depending on A and D such that haus$(S, S') \leq \delta \|D\| \|b - b'\|$.* □

Let us now provide a sketch of the proof of Theorem 3, which will be based on Theorem 2 in case $u(\cdot)$ is locally AC and on [30, Theorem 3.1] and [17, Theorem 3.3] in case $u(\cdot)$ is locally RCBV. The locally pAC result follows by combining these results. The first step is to connect the property of $u(\cdot)$ in (12) being locally AC or locally RCBV, with the property of the multivalued mapping $t \mapsto S(t)$ with $S(t)$ as in (12). Using Lemma 7 we may identify M with A, $Nu + F$ with $-b$, and $C_1 = \{z \mid z \geq 0\}$, while $C_2 = I\!R^n$. Then we have that

$$\text{haus}(S(t), S(\tau)) \leq \gamma \, ||u(t) - u(\tau)||, \tag{61}$$

where γ is a constant depending on M and N. Thus if $u(\cdot)$ is locally AC (resp. locally RCBV), $S(\cdot)$ is locally AC (resp. locally RCBV). In case of locally AC $u(\cdot)$ we rely on Theorem 2 to prove the well-posedness. To show that the hypothesis of Theorem 2 is true, observe that the vector field $f(t, x) = Ax + Bu(t)$ is Lipschitz continuous w.r.t. x and that it satisfies a linear growth condition, which are both obviously true due to the linearity properties of $f(\cdot, \cdot)$). Indeed, setting $\beta(t) = \max(||Bu(t)||, ||A||)$ fulfills the second condition of Theorem 2. Hence, we conclude that in the locally AC case, Theorem 3 follows from Theorem 2. In the locally RCBV case, the existence of locally RCBV solutions follows from [30, Theorem 3.1]. The uniqueness can be shown in a way similar to the proof of [17, Theorem 3.3].

The existence of locally pAC solutions in case of locally pAC inputs $u(\cdot)$ follows from the locally AC case. Indeed, consider the input $u(\cdot)$ on a compact interval $I = [t_0, T] \subset [0, +\infty)$ with $t_0 < T$. Then there exists a finite set of times $\{t_i\}_{i=0,1,\ldots,N}$ with $t_0 < t_1 < \ldots < t_N = T$ such that $u(\cdot)$ is AC on $[t_i, t_{i+1})$. As $x(t_0) = x_0 \in S(t_0)$ and $u(\cdot)$ is AC on $[t_0, t_1)$ we can apply the existence result for the locally AC case, which provides an AC solution $x(\cdot)$ on $[t_0, t_1)$. As $u(\cdot)$ may jump at t_1, we apply the jump characterization in (10) given $x(t_1^-)$ and $S(t_1^+)$, which, provides $x(t_1^+) \in S(t_1^+)$. The convexity of $S(t_1^+)$ guarantees that this projection is well defined. This construction can be continued for each interval $[t_i, t_{i+1})$ for $i = 1, \ldots, N-1$ providing a pAC solution $x(\cdot)$ on I. As I was

arbitrary, this construction leads to a locally pAC solution $x(\cdot)$ to the DI (7) on $[0, +\infty)$. As $x(\cdot)$ is also locally RCBV, the uniqueness proven for the case of locally RCBV applies now to show the uniqueness within the class of locally pAC functions as well.

Acknowledgement: The authors thank Aris Daniilidis (Departament de Matematiques, Universitat Autonoma de Barcelona) for useful discussions on normal cones, and Vincent Acary and Franck Pérignon (INRIA Grenoble Rhône-Alpes) for their help in obtaining the simulations with the SICONOS software package. The authors are also grateful to the reviewers for their constructive and detailed comments that improved the overall quality of the paper.

References

[1] V. Acary and B. Brogliato. *Numerical Methods for Nonsmooth Dynamical Systems. Applications in Mechanics and Electronics*, volume 35 of *Lecture Notes in Applied and Computational Mechanics*. Springer Verlag, Berlin Heidelberg, 2008.

[2] V. Acary, B. Brogliato, and D. Goeleven. Higher order Moreau's sweeping process: mathematical formulation and numerical simulation. *Mathematical Programming Ser. A*, 113:133–217, 2008.

[3] V. Acary and F. Pérignon. An introduction to SICONOS. Technical Report 0340, INRIA, July 2007. http://hal.inria.fr/docs/00/16/36/84/PDF/RT-0340.pdf.

[4] K. Addi, S. Adly, B. Brogliato, and D. Goeleven. A method using the approach of Moreau and Panagiotopoulos for the mathematical formulation of non-regular circuits in electronics. *Nonlinear Analysis: Hybrid Systems*, 1:30–43, 2007.

[5] A. Alessandri and P. Coletta. Design of Luenberger observers for a class of hybrid linear systems. In M.D. Di Benedetto and A. Sangiovanni-Vincentelli, editors, *Proc. of Hybrid Systems: Computation and Control*, volume 2034 of *Lecture Notes in Computer Science*, pages 7–18, Rome, 2001. Springer.

[6] A. Alessandri and P. Coletta. Switching observers for continuous-time and discrete-time linear systems. In *Proc. of the American Control Conference*, pages 2516–2521, 2001.

[7] M. Arcak. Certainty-equivalence output-feedback design with circle-criterion observers. *IEEE Transactions on Automatic Control*, 50:905–909, 2005.

[8] M. Arcak and P. Kokotović. Observer based control of systems with slope-restricted nonlinearities. *IEEE Transactions on Automatic Control*, 46(7):1146–1150, 2001.

[9] J.P. Aubin and A. Cellina. *Differential Inclusions*. Springer–Verlag, Berlin, 1984.

[10] J.P. Aubin and H. Frankoswska. Observability of systems under uncertainty. *SIAM J. Control and Optimization*, 27:949–975, 1989.

[11] J. Bastien, M. Schatzman, and Lamarque C.H. Study of some rheological models with a finite number of degrees of freedom. *European Journal of Mechanics A/Solids*, 19:277–307, 2000.

[12] H. Brezis. *Operateurs Maximaux Monotones*. North-Holland/American Elsevier, Amsterdam, 1973.

[13] B. Brogliato. Some perspectives on the analysis and control of complementarity systems. *IEEE Transactions on Automatic Control*, 48:918 – 935, 2003.

[14] B. Brogliato, A. Daniilidis, C. Lemaréchal, and V. Acary. On the equivalence between complementarity systems, projected systems, and differential inclusions. *Systems and Control Letters*, 5:45–51, 2006.

[15] B. Brogliato and D. Goeleven. The Krakovskii-LaSalle invariance principle for a class of unilateral dynamical systems. *Mathematics of Control, Signals and Systems*, 17:57–76, 2005.

[16] B. Brogliato, R. Lozano, B. Maschke, and O. Egeland. *Dissipative Systems Analysis and Control. Theory and Applications*. 2nd Ed., Communications and Control Engineering. Springer Verlag, London, 2007.

[17] B. Brogliato and L. Thibault. Well-posedness results for non-autonomous complementarity systems. submitted; preliminary version at http://hal.inria.fr/docs/00/07/95/71/PDF/RR-5931.pdf, 2007.

[18] K.K. Busawon and M. Saif. A state observer for nonlinear systems. *IEEE Transactions on Automatic Control*, 44:2098–2103, 1999.

[19] M.K. Camlibel, W.P.M.H. Heemels, and J.M. Schumacher. Consistency of a time-stepping method for a class of piecewise-linear networks. *IEEE Transactions on Circuits and Systems-I*, 49(3):349–357, 2002.

[20] M.K. Camlibel, W.P.M.H. Heemels, and J.M. Schumacher. On linear passive complementarity systems. *European Journal of Control. Special issue on "Dissipativity of dynamical systems: applications in control"*, 8:220–237, 2002.

[21] M.K. Camlibel, W.P.M.H. Heemels, A.J. van der Schaft, and J.M. Schumacher. Switched networks and complementarity. *IEEE Transactions on Circuits and Systems I: Fundamental Theory and Applications*, 50:1036–1046, 2003.

[22] M.K. Camlibel, J.S. Pang, and J. Shen. Conewise linear systems: non-zenoness and observability. *SIAM J. Control Optimizaton*, 45:1769–1800, 2006.

[23] M.K. Camlibel and J.M. Schumacher. Existence and uniqueness of solutions for a class of piecewise linear dynamical systems. *Linear Algebra and its Applications*, 351:147–184, 2002.

[24] J. Cortes. Discontinuous dynamical systems. *IEEE Control Systems Magazine*, 28:36–73, 2008.

[25] R.W. Cottle, J.-S. Pang, and R.E. Stone. *The Linear Complementarity Problem*. Academic Press, Inc., Boston, 1992.

[26] K. Deimling. *Multivalued Differential Equations*. De Gruyter Series in Nonlinear Analysis and Applications, Berlin, 1992.

[27] A. Dontchev and F. Lempio. Difference methods for differential inclusions. *SIAM review*, 34(2):263–294, 1992.

[28] P. Dupuis and A. Nagurney. Dynamical systems and variational inequalities. *Annals of Operations Research*, 44:9–42, 1993.

[29] J.F. Edmond and L. Thibault. Relaxation of an optimal control problem involving a perturbed sweeping process. *Mathematical Programming Ser. B*, 104:347–373, 2005.

[30] J.F. Edmond and L. Thibault. BV solutions of nonconvex sweeping process differential inclusion with perturbation. *Journal of Differential Equations*, 226:135–179, 2006.

[31] X. Fan and M. Arcak. Observer design for systems with multivariable monotone nonlinearities. *Systems and Control Letters*, 50:319–330, 2003.

[32] A.F. Filippov. *Differential Equations with Discontinuous Righthand Sides*. Mathematics and its Applications. Kluwer, Dordrecht, The Netherlands, 1988.

[33] J.P. Gauthier and I. Kupka. Observability and observers for nonlinear systems. *SIAM J. Control and Optimization*, 32:975–994, 1994.

[34] C. Glocker. *Set-Valued Force Laws*. Lecture Notes in Applied Mechanics 1. Springer Verlag, Heidelberg, 2001.

[35] D. Goeleven and B. Brogliato. Stability and instability matrices for linear evolution variational inequalities. *IEEE Transactions on Automatic Control*, 49:521– 534, 2004.

[36] D. Goeleven, D. Motreanu, Y. Dumont, and M. Rochdi. *Variational and Hemivariational Inequalities: Theory, Methods and Applications. Volume I: Unilateral Analysis and Unilateral Mechanics*. Nonconvex Optimization and its Applications. Kluwer Academic Publishers, Boston/Dordrecht/London, 2003.

[37] W.P.M.H. Heemels and B. Brogliato. The complementarity class of hybrid dynamical systems. *European Journal of Control*, 9:322–360, 2003.

[38] W.P.M.H. Heemels, M.K. Camlibel, and J.M. Schumacher. On the dynamical analysis of piecewise linear networks. *IEEE Transactions on Circuits and Systems*, 49:315–327, 2002.

[39] W.P.M.H. Heemels, A. Juloski, and B. Brogliato. Observer design for Lur'e systems with monotonic multivalued mappings. *Preprints of the 16th IFAC World Congress, Prague*, 2005.

[40] W.P.M.H Heemels, J.M. Schumacher, and S. Weiland. Linear complementarity systems. *SIAM Journal on Applied Mathematics*, 60:1234–1269, 2000.

[41] W.P.M.H. Heemels, J.M. Schumacher, and S. Weiland. Projected dynamical systems in a complementarity formalism. *Operations Research Letters*, 27(2):83–91, 2000.

[42] J.B. Hiriart-Urruty and C. Lemaréchal. *Fundamentals of Convex Analysis*. Grundlehren text Editions. Springer Verlag, Berlin Heidelberg., 2001.

[43] A.V. Il'in, S.K. Korovin, V.V. Fomichev, and A. Hlavenka. Synthesis of asymptotic observers for linear vector indeterminate systems. *Differential Equations*, 41(1):74–83, 2005.

[44] G. Iulia Bara, J. Daafouz, F. Kratz, and C. Iung. State estimation for a class of hybrid systems. In *Proc. of 4th Int. Conf. on Automation of Mixed Processes: Hybrid Dynamic Systems*, pages 313–316, Dortmund, Germany, 2000.

[45] K.H. Johansson, A. Rantzer, and K.J. Astrom. Fast switches in relay feedback systems. *Automatica*, 35:539–552, 1999.

[46] M. Johansson and A. Rantzer. Computation of piecewise quadratic Lyapunov functions for hybrid systems. *IEEE Transactions on Automatic Control*, 43(4):555–559, 1998.

[47] A. Jokic, M. Lazar, and P.P.J. van den Bosch. Price-based optimal control of power flow in electrical energy transmission networks. In *Proc. of the Int. Conf. Hybrid systems: Computation and Control, Springer, Editors: A. Bemporad, A. Bicchi, G. Buttazzo*, Lecture Notes in Computer Science, 4416, pages 315–328, 2007.

[48] A.Lj. Juloski, W.P.M.H. Heemels, and S. Weiland. Observer design for a class of piecewise linear systems. *Intern. J. Robust and Nonlinear Control*, 17(15):1387–1404, 2007.

[49] N. Kazantzis and C. Kravaris. Nonlinear observer design using lyapunov's auxiliary theorem. *Systems and Control Letters*, 34:241–247, 1998.

[50] G. Kreisselmeier and R. Engel. Nonlinear observers for autonomous Lipschitz continuous systems. *IEEE Transactions on Automatic Control*, 48(3):451–464, March 2003.

[51] M. Kunze and M. Monteiro Marques. An introduction to Moreau's sweeping process. *in Impacts in Mechanical Systems, Lecture Notes in Physics 551, Springer Verlag, B. Brogliato (Ed.)*, pages 1–60, 2000.

[52] M. Kunze and M.D.P. Monteiro Marques. On parabolic quasi-variational inequalities and state dependent sweeping processes. *Topological Methods in Nonlinear Analysis*, 12:179–191, 1998.

[53] Y.J. Lootsma, A.J. Van der Schaft, and M.K. Camlibel. Uniqueness of solutions to linear relay systems. *Automatica*, pages 467–478, 1999.

[54] M.D.P. Monteiro Marques. *Differential Inclusions in Nonsmooth Mechanical Problems. Shocks and Dry Friction*. Progress in Nonlinear Differential Equations and Their Applications 9. Birkhauser, Basel, 1993.

[55] B. Maury and J. Venel. Handling of contacts in crowd motion simulations. In *Traffic and Granular Flow'07*, Paris-Sud University, Orsay, 20–22 June 2007. Springer Verlag.

[56] J.J. Moreau. Evolution problem associated with a moving convex set in a Hilbert space. *Journal of Differential Equations*, 26:347–374, 1977.

[57] A. Nagurney and D. Zhang. *Projected Dynamical Systems and Variational Inequalities with Applications*. Kluwer, Dordrecht, 1996.

[58] M. Osorio and J.A. Moreno. Dissipative design of observers for multivalued nonlinear systems. *Proceedings of the IEEE Conference on Decision and Control*, pages 5400–5405, 2006.

[59] A. Pavlov, S. Pogromsky, N. van de Wouw, H. Nijmeijer, and K. Rooda. Convergent piecewise affine systems: analysis and design Part II: discontinuous case. In *Proceedings of the 44th IEEE Conference on Decision and Control and European Control Conference, Sevilla, Spain*, 2005.

[60] A. Pavlov, N. van de Wouw, and H. Nijmeijer. Convergent piecewise affine systems: analysis and design Part I: continuous case. In *Proceedings of the 44th IEEE Conference on Decision and Control and European Control Conference, Sevilla, Spain*, 2005.

[61] S. Petterson. Switched state jump observers for switched systems. In *Proceedings of the IFAC World Congress*, Prague, Czech Republic, 2005.

[62] A. Pogromsky, W.P.M.H. Heemels, and H. Nijmeijer. On solution concepts and well-posedness of linear relay systems. *Automatica*, 39:2139–2147, 2003.

[63] R.A. Poliquin, R.T. Rockafellar, and L. Thibault. Local differentiability of distance functions. *Transactions of the American Mathematical Society*, 352:5231–5249, 2000.

[64] R. Rajamani. Observers for Lipschitz nonlinear systems. *IEEE Transactions on Automatic Control*, 43:397–401, 1998.

[65] S.M. Robinson. Stability theory for systems of inequalities. Part I: Linear systems. *SIAM J. Numerical Analysis*, 12:754 – 769, 1975.

[66] R.T. Rockafellar. *Convex Analysis*. Princeton University Press, Princeton, New Jersey, 1970.

[67] R.T. Rockafellar and R.J.B. Wets. *Variational Analysis*. Springer, Berlin, 1998.

[68] G.V. Smirnov. *Introduction to the Theory of Differential Inclusions*. Graduate Studies in Mathematics vol.41. American Mathematical Society, Providence, Rhode Island, 2002.

[69] E. D. Sontag. Nonlinear regulation: The piecewise linear approach. *IEEE Transactions on Automatic Control*, 26(2):346–358, April 1981.

[70] J. Tsinias. A generalization of Vidyasagar's theorem on stabilizability using state detection. *Systems and Control Letters*, 1991.

[71] A.J. van der Schaft and J. M. Schumacher. The complementary-slackness class of hybrid systems. *Mathematics of Control, Signals and Systems*, 9:266–301, 1996.

[72] A.J. van der Schaft and J.M. Schumacher. Complementarity modelling of hybrid systems. *IEEE Transactions on Automatic Control*, 43(4):483–490, 1998.

[73] A.J. van der Schaft and J.M. Schumacher. *An Introduction to Hybrid Dynamical Systems*, volume 251 of *LNCIS*. Springer-Verlag, London, 2000.

[74] M. Vidyasagar. *Nonlinear Systems Analysis*. Prentice Hall, Engelwood Cliffs, New Jersey, 1993.

Contents

1 Introduction **3**

2 Preliminaries **6**
2.1 Notation and definitions . . . 6
2.2 Monotone differential inclusions . . . 8
2.3 Perturbed sweeping process and measure differential inclusions . . . 8

3 Problem statement **10**
3.1 Time-independent multifunction . . . 11
3.2 Time-dependent multifunction . . . 11
3.3 Observer structures . . . 12
3.4 Linear complementarity systems . . . 13

4 Main results **16**
4.1 Time-independent multifunction . . . 16
4.1.1 Observers well-posedness . . . 16
4.1.2 Asymptotic recovery of the state . . . 18
4.2 Time-dependent multifunctions . . . 20
4.2.1 Observer well-posedness . . . 20
4.2.2 Asymptotic recovery of the state . . . 21

5 Stabilization of multivalued systems **22**
5.1 State feedback . . . 22
5.2 Separation principle: dynamic output feedback . . . 23
5.2.1 Closed-loop stability . . . 24
5.2.2 Closed-loop well-posedness . . . 25
5.3 Time-dependent multifunctions . . . 25

6 Numerical example **26**

7 Conclusions **27**

A Appendix **29**

Unité de recherche INRIA Rhône-Alpes
655, avenue de l'Europe - 38334 Montbonnot Saint-Ismier (France)

Unité de recherche INRIA Futurs : Parc Club Orsay Université - ZAC des Vignes
4, rue Jacques Monod - 91893 ORSAY Cedex (France)
Unité de recherche INRIA Lorraine : LORIA, Technopôle de Nancy-Brabois - Campus scientifique
615, rue du Jardin Botanique - BP 101 - 54602 Villers-lès-Nancy Cedex (France)
Unité de recherche INRIA Rennes : IRISA, Campus universitaire de Beaulieu - 35042 Rennes Cedex (France)
Unité de recherche INRIA Rocquencourt : Domaine de Voluceau - Rocquencourt - BP 105 - 78153 Le Chesnay Cedex (France)
Unité de recherche INRIA Sophia Antipolis : 2004, route des Lucioles - BP 93 - 06902 Sophia Antipolis Cedex (France)

Éditeur
INRIA - Domaine de Voluceau - Rocquencourt, BP 105 - 78153 Le Chesnay Cedex (France)
http://www.inria.fr
ISSN 0249-6399