HAL
open science

Observer design for dissipative multivalued dynamical systems

Bernard Brogliato, W.P. Maurice H. Heemels

To cite this version:

Bernard Brogliato, W.P. Maurice H. Heemels. Observer design for dissipative multivalued dynamical systems. [Research Report] 2007. inria-00139576v2

HAL Id: inria-00139576

https://inria.hal.science/inria-00139576v2

Submitted on 30 Jul 2007

HAL is a multi-disciplinary open access archive for the deposit and dissemination of scientific research documents, whether they are published or not. The documents may come from teaching and research institutions in France or abroad, or from public or private research centers.

L'archive ouverte pluridisciplinaire **HAL**, est destinée au dépôt et à la diffusion de documents scientifiques de niveau recherche, publiés ou non, émanant des établissements d'enseignement et de recherche français ou étrangers, des laboratoires publics ou privés.

INSTITUT NATIONAL DE RECHERCHE EN INFORMATIQUE ET EN AUTOMATIQUE

Observer design for dissipative multivalued dynamical systems

Bernard Brogliato — W.P.M.H. Heemels

N° ????

April 2007

Thème ?

Rapport de recherche

ISSN 0249-6399 ISRN INRIA/RR--????--FR+ENG

Observer design for dissipative multivalued dynamical systems

Bernard Brogliato [*] , W.P.M.H. Heemels [†]

Thème ? —
Projet Bipop

Rapport de recherche n° ???? — April 2007 — 27 pages

Abstract: This paper deals with the design of state observers for a class of systems with set-valued right-hand-sides. Two main classes of set-valued mappings are considered: maximal monotone and time-invariant; or normal cones to possibly time-varying sets (not necessarily convex). Such controlled systems can be embedded in various kinds of differential inclusions with absolutely continuous and bounded variation solutions (inclusions with maximal monotone multivalued mappings, and the perturbed Moreau's sweeping process), using a suitable state space transformation. The well-posedness properties of the observers dynamics are carefully analyzed. The stability of the observation error is proved. Then the problem of stabilization with a feedback control using the estimated state is studied in a particular case. Most of the results rely on rendering some suitable operator dissipative (or SPR in the linear case).

Key-words: observer, multivalued systems, differential inclusions, sweeping process, maximal monotone mappings, convex analysis, Lur'e systems, KYP lemma, dissipative systems, positive real systems.

[*] INRIA, ZIRST Montbonnot, 655 avenue de l'Europe, 38334 Saint-Ismier, France, Bernard.Brogliato@inrialpes.fr
[†] Department of Mechanical Engineering of the Eindhoven University of Technology, P.O. Box 513, 5600 MB Eindhoven, The Netherlands, E-mail: m.heemels@tue.nl

Unité de recherche INRIA Rhône-Alpes
655, avenue de l'Europe, 38334 Montbonnot Saint Ismier (France)
Téléphone : +33 4 76 61 52 00 — Télécopie +33 4 76 61 52 52

Observateurs pour les systèmes dynamiques multivalués dissipatifs

Résumé : Dans cet article nous proposons une étude de la synthèse d'observateurs pour une classe de systèmes multivalués, avec second membre maximal monotone, ou bien se mettant sous la forme d'un processus de rafle perturbé (inclusion dans un cône normal). Une propriété de passivité est utilisée afin de mettre le système sous une forme canonique adéquate, permettant de montrer l'existence et l'unicité des solutions. La stabilité de la dynamique d'erreur d'observation est étudiée, et la stabilisation avec un feedback de l'état observé est démontrée dans certains cas. Les cas linéaires et non-linéaires sont étudiés.

Mots-clés : Observateurs d'état, systèmes multivalués, inclusions différentielles, processus de rafle, opérateurs maximaux monotones, analyse convexe, systèmes de Lur'e, Lemme KYP, systèmes dissipatifs, systèmes positifs réels.

1 Introduction

Models involving set-valued mappings are ubiquitous in mechanics and electricity [21, 23, 2, 4]. In this paper the problem of synthesizing exponentially stable observers for a class of differential inclusions of the form

$$\begin{cases} -dx + f(t, x(t))dt \in F(t, x(t)) \\ \\ y(t) = h(x(t)), \quad x(0) = x_0 \in \mathrm{dom}(F(0, \cdot)) \end{cases} \tag{1}$$

is studied. In (1) dx denotes the differential measure of the function $x : I\!R \to I\!R^n$ (which, in case $x(\cdot)$ is absolutely continuous, is equal to its usual derivative), and $F(t, x(t))$ is a multivalued mapping. Conditions on the vector field $f(t, x(t))$ and on the output function $h(x)$ will be given later, however two main cases will be treated: the linear case $f(t, x) = Ax + Bu(t)$, $h(x) = Cx$, and the nonlinear case. Concerning the right-hand-side of (1) two main cases will be treated: $F(t, x) = F(x) + f(t)$, i.e. the multivalued mapping $F(x)$ is time-independent, and then we shall assume that it is maximal monotone, or $F(t, x) = N(S(t); x)$ where $S(\cdot)$ is a closed convex set-valued mapping and $N(S(t); x)$ is the normal cone to $S(t)$ in the sense of convex analysis. We also show how the convexity may be relaxed. When $x(\cdot)$ is of bounded variation, the usual derivative of $x(\cdot)$ no longer exists (discontinuities are permitted), so that the differential measure dx is used. Then the inclusion in (1) is called a *measure differential inclusion*. All these notions will be defined and made precise in the next section.

Lur'e type with maximal monotone multivalued mapping in the feedback path (see figure 1) constitute an example of such inclusions. A multivalued or set-valued mapping is a mapping that assigns a set of possible values to its input argument, and the output of the mapping can be any value in this set. The requirements that the mapping is maximal and monotone generalize the usually considered concept of continuous, sector bounded nonlinearity [43]. Systems of the considered type may arise as a natural consequence of modelling (e.g. models of friction phenomena, ideal diodes), or the used solution concept (e.g. Filippov solutions [17]). Examples of systems obtained by interconnecting linear dynamics in a feedback configuration with maximal monotone mapping, as in figure 1, include various classes of hybrid systems: certain piece-wise linear systems [41, 28] (fig. 2a), linear relay systems [27] (figure 2b), linear complementarity systems [24, 39, 4] (figure 2c), and electric circuits with switching elements (e.g. ideal diodes, fig. 2c, MOS transistors, characteristic in fig. 2d) [2].

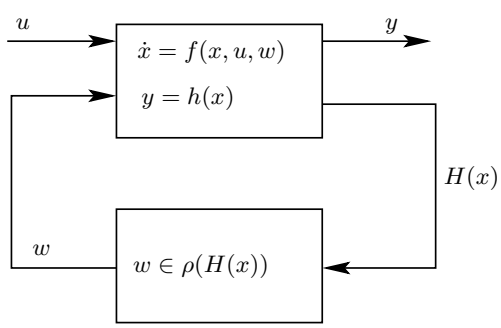

Figure 1: Lur'e type system with maximal monotone multivalued mapping.

Two observer structures are proposed in the paper, which are based on rendering the linear part of the error dynamics strictly positive real (SPR). As the considered class of systems and the proposed observers are nonsmooth, tools of convex analysis are needed to formally analyze and prove their properties. Existence and uniqueness of solutions (i.e. well-posedness) of the system and observer is carefully analyzed. Well-posedness of the system is an important theoretical question, and, from a practical standpoint, if an observer is to be numerically implemented, well-posedness is necessary to ensure the proper behavior of the implementation. From the existence of solutions to both the observed system and the observer, the existence of solutions to the observation error follows. It is further shown that the observer recovers asymptotically the state of the observed system (i.e. that the error dynamics is globally asymptotically stable).

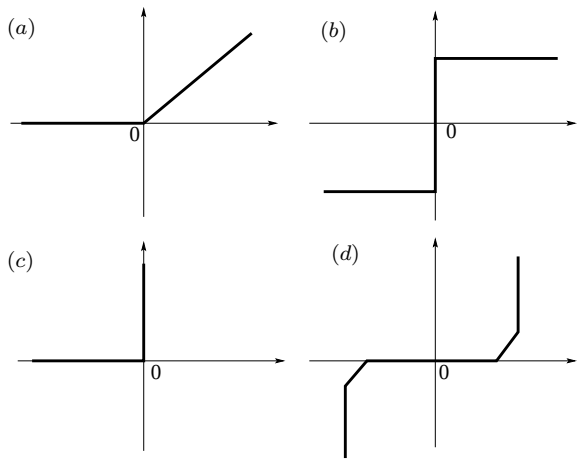

Figure 2: Maximal monotone set-valued mapping.

Stability of Lur'e type systems with SPR linear part and the discontinuous nonlinearity has been studied in [45], but the problem of existence and uniqueness of solutions for these systems was not considered. Existence and uniqueness of solutions, as well as stability of autonomous Lur'e type systems with maximal monotone nonlinear mappings have been studied in [5]. The well-posedness of some dissipative complementarity systems is proved in [9, 5], embedding these systems into the perturbed sweeping process [16, 15]. Observer design methodologies for Lur'e type systems with *locally Lipschitz* slope restricted nonlinearities was studied before in [3, 35]. However, since nonsmooth and non-Lipschitz nonlinearities are allowed in the system studied here, the results of [3, 35] are not applicable (for instance condition (7) in [35, Theorem 2] is totally irrelevant in our setting). We have to resort to a framework of convex analysis, to establish an observer design procedure for the considered class of systems. Observer design is presented in [33] using dissipativity arguments, for a class of set-valued systems. However the differential inclusions considered in [33] are different from those considered in this paper, because of compactness and local boundedness properties which are not satisfied by the set-valued right-hand-sides we work with. One consequence is that solutions in [33] are absolutely continuous, whereas we allow for solutions of bounded variation, in the framework of *measure differential inclusions*, introduced by J.J. Moreau [32, Definition 3a]. A (very) preliminary version of the work presented in this paper is in [29], utilizing an idea in [5].

The paper is structured as follows. In section 2 some basic concepts of convex analysis and differential inclusions are given. Sections 3 and 4 deal with the linear vector field $f(t,x) = Ax + Bu(t)$ case. In section 3 the observer design problem is formally stated. Two cases are examined: when the multivalued mapping is time-invariant (section 3.1), and when it is time-varying (section 3.2). The observers dynamics are introduced in section 3.3. Section 4 contains the main results of the paper. The observers well-posedness is studied, and the error dynamics stability is proved. This is done for the time-invariant set-valued mapping case (section 4.1), and for the time-varying set-valued mapping case (section 4.2). The stabilization with an estimated state feedback is tackled in section 4.3. Section 5 is dedicated to the nonlinear vector field $f(t,x)$ case. Conclusions are presented in section 6, and some technical results are in the Appendix.

2 Preliminaries

2.1 Notation and definitions

The material that follows is taken from [31, 1, 37, 25, 34]. With $\mathcal{L}^1_{loc}([0,\infty), I\!R^n)$ we denote the Lebesgue spaces of locally integrable and square integrable functions functions $[0,\infty) \to I\!R^n$. A mapping $\rho : \mathbb{X} \to \mathbb{Y}$, where $\mathbb{X}, \mathbb{Y} \subseteq \mathbb{R}^l$, is said to be *multivalued* if it assigns to each element $x \in \mathbb{X}$ a subset $\rho(x) \subset \mathbb{Y}$ (which may be empty). The domain of the mapping $\rho(\cdot)$, $\mathrm{dom}(\rho)$ is defined as $\mathrm{dom}(\rho) = \{x | x \in \mathbb{X}, \rho(x) \neq \emptyset\}$. We define

the graph of the mapping $\rho(\cdot)$ as $\mathrm{Graph}\,\rho = \{(x, x^*) \mid x^* \in \rho(x)\}$. A multivalued mapping $\rho(\cdot)$ is said to be *monotone*, if $\forall x_1, x_2 \in \mathrm{dom}(\rho), \quad \forall x_1^* \in \rho(x),\ \forall x_2^* \in \rho(x_2) \quad \langle x_1^* - x_2^*, x_1 - x_2\rangle \geq 0$, where $\langle\cdot,\cdot\rangle$ denotes the inner product. A multivalued mapping $\rho(\cdot)$ is said to be *maximally monotone* if its graph is not strictly contained in the graph of any other monotone mapping. In other words, maximality means that new elements can not be added to the $\mathrm{Graph}\,\rho$ without violating the monotonicity of the mapping. All the examples in figure 2 are maximal monotone mappings with graphs in $I\!R^2$. The right and left limits of a function at t are denoted $f(t^+)$ and $f(t^-)$ respectively. An absolutely continuous (AC) function $f : [a, b] \to I\!R$ is almost everywhere differentiable with derivative $\dot{f}(\cdot) \in \mathcal{L}^1([a, b], I\!R)$ anf $f(x) - f(a) = \int_a^x \dot{f}(t)dt$ for any $a \leq x$. It is locally AC if it is AC for any interval $[a, b] \subset I\!R$. Let the *total variation* of $f(\cdot)$ be defined as $var_f(x) = \sup \sum_{i=1}^N |f(t_i) - f(t_{i-1})|, \quad (a \leq x \leq b)$, where the supremum is taken along all integers N, and all possible choices of the sequence $\{t_i\}$ such that $a = t_0 < t_1 < .... < t_N = x$. The function $f(\cdot)$ is said of *bounded variation* (BV) on $[a, b]$ if $var_f(b) < +\infty$. If it is right continuous with bounded variations we denote it as RCBV. It is locally RCBV if this holds for any interval $[a, b] \subset I\!R$. Let $x \in BV(I; I\!R^n)$ be given. We denote by dx the differential measure generated by x. For $a \leq b$, $a, b \in I$: $dx([a, b]) = x(b^+) - x(a^-)$, $dx([a, b)) = x(b^-) - x(a^-)$, $dx((a, b]) = x(b^+) - x(a^+)$, , $dx((a, b)) = x(b^-) - x(a^+)$. In particular, we have $dx(\{a\}) = x(a^+) - x(a^-)$. Let $S \subset I\!R^n$ be a set. The indicator function of S is defined as $\psi_S(x) = +\infty$ if $x \notin S$, and $\psi_S(x) = 0$ if $x \in S$. When S is nonempty closed convex, then $\psi_S(\cdot)$ is a convex lower semicontinuous function which has a subderivative in the sense of convex analysis, denoted as $\partial\psi_S(\cdot)$. The normal cone to a convex set $S \subset I\!R^n$ at a point $x \in I\!R^n$ is $N(S; x) = \{z \in I\!R^n \mid \langle z, y - x\rangle \leq 0, \text{ for all } y \in S\}$. One has $\partial\psi_S(x) = N(S; x)$ when $x \in S$, $\partial\psi_S(x) = \emptyset$ otherwise. When S is not convex an extension of the normal cone from convex analysis is the Fréchet normal cone: $\hat{N}(S; x) = \{z \in I\!R^n \mid \langle z, y - x\rangle \leq o(\| y - x \|) \text{ for all } y \in S\}$ (in the text we shall denote all normal cones as $N(S; x)$, being understood that when S is not convex this is the Fréchet normal cone). When S is convex both cones are equal. A set $S \subset I\!R^n$ is said r-prox-regular if $\langle \xi_1 - \xi_2, x_1 - x_2\rangle \geq - \| x_1 - x_2 \|^2$ for all $\xi_i \in \hat{N}(S, x)$ and $\| \xi_i \| < r$. This is called the *hypomonotonicity* property. Notice that when the set S is $r-$prox-regular, then the set-valued mapping $x \mapsto \hat{N}(S; x) + x$ is monotone for elements of the normal cone satisfying $\| \xi_i \| < r$. Another characterization of r-prox-regularity is that all points close enough (at a distance less than r) to S have a unique projection on S. A multivalued mapping $S : t \mapsto S(t) \subset I\!R^n$ is RCBV if it is BV, with the Hausdorff distance being used in the total variation definition above, and $var_S(\cdot)$ is right continuous. The domain of a function $f : I\!R^n \to I\!R$ is $\mathrm{dom}(f) = \{x \mid f(x) < +\infty\}$ (the function is said proper if its domain is not empty and $f(x) > -\infty$ for all x). Let $f(\cdot)$ be a convex proper function. Its conjugate function $f^*(\cdot)$ is defined as $f^* : s \mapsto \sup\{\langle s, x\rangle - f(x),\ x \in dom(f)\}$. I_n is the $n \times n$ identity matrix, 0_n is the $n \times n$ zero matrix. $B(0, R) = \{x \in I\!R^n \mid \| x \| \leq R\}$, for some $R \geq 0$. A linear system given by (A, B, C), where B has full column rank (i.e. $\mathrm{Ker}\{B\} = \emptyset$), is strictly positive real (SPR) if there exist a $P = P^\top > 0$ and a $Q = Q^\top > 0$ such that [44] [8, Chapter 3]:

$$PA + A^\top P = -Q \tag{2a}$$

$$B^\top P = C. \tag{2b}$$

2.2 Monotone differential inclusions

Let us consider the differential inclusion (DI)

$$\dot{x}(t) \in -F(x(t)) + f(t), \quad x(0) \in \mathrm{dom}\, F \tag{3}$$

The following result is a generalization of the Hille-Yosida Theorem [23, Theorem 3.7.1].

Theorem 1 *Let $F(\cdot)$ be a maximal monotone operator mapping dom$(F) \subset I\!R^n$ into $I\!R^n$. Let $f : I\!R \to I\!R$ be locally AC. Then the differential inclusion in (3) possesses a unique locally Lipschitz continuous solution on $[0, +\infty)$ such that $x(t) \in dom(F)$, for all $t \geq 0$, and the inclusion in (3) is satisfied almost everywhere on $[0, +\infty)$.*

Notice that Lipschitz continuity is equivalent to absolute continuity with essentially bounded derivative. Hence Theorem 1 assures the existence and uniqueness of an AC solution. A point x_0 is a *fixed point (equilibrium)* of the DI (3) if:

$$0 \in F(x_0) + f(t), \ \forall t \geq 0 \tag{4}$$

Remark 1 *Many other well-posedness results exist in the mathematical literature for DIs of the form $\dot{x}(t) \in F(t, x(t))$, see e.g. [40, 13]. So-called Filippov's systems [17] are one example. When $F : I\!R \to I\!R$ represents a relay function, i.e. $F(x) = \partial \mid x \mid$, then both the maximal monotone and the Filippov's approaches may be used to deduce the existence of locally AC solutions. Relay functions are a typical example of a mapping that satisfies the requirements for both concepts. Maximal monotone set-valued mappings are not necessarily bounded, see figure 1.*

2.3 Perturbed sweeping process and measure differential inclusions

Let us now deal with another class of differential inclusions which does not possess the structure as in (3). They are called *perturbed Moreau's sweeping process*, see [16, 15, 9] for recent contributions and [30] for an introduction. Here and below, dt denotes the one-dimensional Lebesgue measure. Suppose that the set-valued mapping $S(\cdot)$ is locally RCBV. Throughout, in such a case we will denote by $\mu \triangleq d\,(\mathrm{var}_S)$ the differential measure of $\mathrm{var}_S(\cdot)$. This Radon measure μ is obviously positive since the function $\mathrm{var}_S(\cdot)$ is non decreasing. According to [16] a mapping $x : [0, +\infty[\to I\!R^n$ is a solution of (15) with x_0 as initial condition if:

(i) $x(\cdot)$ is locally RCBV and satisfies $x(0) = x_0$ and $x(t) \in S(t)$ for all $t \in [0, +\infty)$,

(ii) the differential vector measure dx is absolutely continuous with respect to the measure $\nu = \mu + dt$ with density $\frac{dx}{d\nu} \in \mathcal{L}^1_{loc}([0, +\infty[, \nu; I\!R^n)$ and

$$-\frac{dx}{d\nu}(t) - f(t, x(t))\frac{dt}{d\nu}(t) \in N(S(t); x(t)) \quad \nu - \text{a.e. } t \in [0, +\infty), \tag{5}$$

where $\frac{dt}{d\nu}(\cdot)$ denotes the density relative to ν of the Lebesgue measure dt which is absolutely continuous with respect to the measure μ, and a.e. is for almost everywhere.

In the bounded variation case we will follow [16] in writing (5) in the form

$$\begin{cases} -dx \in N(S(t); x(t)) + f(t, x(t))dt \\ \\ x(0) = x_0 \in S(0). \end{cases} \tag{6}$$

The meaning of the inclusion at an atom of dx (a jump in $x(\cdot)$) is [31, 1, 9]

$$\begin{aligned} x(t^+) - x(t^-) \in -N(S(t^+); x(t^+)) \quad & \Leftrightarrow x(t^+) = \text{prox}[S(t^+); x(t^-)] \\ & \Leftrightarrow x(t^+) = \text{argmin}_{z \in S(t^+)} \tfrac{1}{2} \parallel z - x(t^-) \parallel^2 \end{aligned} \tag{7}$$

If the solution $x(\cdot)$ is locally AC, then the measure differential inclusion (6) is rewritten as

$$\begin{cases} -\dot{x}(t) \in N(S(t); x(t)) + f(t, x(t)) \ \text{ a.e.} \quad dt - \text{a.e. } t \in [0, +\infty), \\ \\ x(0) = x_0 \in S(0). \end{cases} \tag{8}$$

It is noteworthy that when $S(t)$ is convex for each t then $N(S(t), x) = \partial\psi_{S(t)}(x)$ defines a maximal monotone mapping for each fixed t. Such is not the case when $S(t)$ is not convex. The class of differential inclusions in (6) is therefore quite different from the class in (3). Let us now present the existence and uniqueness results for the inclusions in (6) and (8). First of all let us present a set of properties of a set $S(\cdot)$, that will be used later:

- **(A1)** For each $t \geq 0$, $S(t)$ is nonempty closed, $r-$prox-regular subset of $I\!R^n$.
- **(A2)** $S(t)$ varies in a absolutely continuous way, i.e. there exists an AC function $v(\cdot)$ such that for any $y \in I\!R^n$ and $s, t \geq 0$

$$| \, d(y, S(t)) - d(y, S(s)) \, | \leq | \, v(t) - v(s) \, |$$

  where $d(y, S) = \inf\{\| \, y - x \, \| \, , x \in S\}$.
- **(A3)** $S(\cdot)$ is of right continuous bounded variation (RCBV), i.e. it is of bounded variation and its variation function $\text{var}_S(\cdot)$ is right continuous on $I\!R^+$.

A set S that is $r-$prox-regular is such that all the points that satisfy $d(x, S) < r$ have a unique projection on S. So obviously convex sets are prox-regular with any $r > 0$. It is noteworthy that the normal cone in (5) or (6) in case $S(t)$ is not convex, is not the usual normal cone of convex analysis. It has to be generalized to the Fréchet normal cone [16, 15].

Theorem 2 *[15, Theorem 1] Let $S(\cdot)$ satisfy assumptions* **(A1)** *and* **(A2)**. *Let $f : I \times I\!R^n \to I\!R^n$ be a separately measurable map on I such that*

- *For every $\eta > 0$ there exists a non-negative function $k_\eta(\cdot) \in \mathcal{L}^1(I, I\!R)$ such that for all $t \in I$ and for any $(x, y) \in B[0, \eta] \times B[0, \eta]$ one has $||f(t, x) - f(t, y)|| \leq k_\eta(t)||x - y||$;*
- *there exists a non-negative function $\beta(\cdot) \in \mathcal{L}^1(I, I\!R)$ such that, for all $t \in I$ and for all $x \in \bigcup_{s \in I} S(s)$, $||f(t, x)|| \leq \beta(t)(1 + ||x||)$.*

Then for any $x_0 \in S(t_0)$ the inclusion (8) has a unique AC solution $x(\cdot)$ on I.

Let us now give a third result proved in [9], where the set $S(\cdot)$ satisfies property **(A2)** or **(A3)**.

Theorem 3 *[9] Let $f(t, x) = Ax + Bu(t)$ in (6), where $u(\cdot)$ is Lebesgue measurable, A and B are constant matrices of apppropriate dimensions. Suppose that $S(t)$ is nonempty polyhedral for each $t \geq 0$, and that it is locally AC (resp. locally RCBV). Then the perturbed sweeping process in (6) has one and only one locally AC (resp. locally RCBV) solution on $[0, +\infty)$.*

In the locally AC case, Theorem 3 is a direct consequence of Theorem 2. In the locally RCBV case the uniqueness is shown in [9]. Throughout the paper we will use both theorems.

Remark 2 *The set-valued systems we work with in this paper all have the uniqueness of solutions property. Consider the time discretizations when non uniqueness of solutions holds [14]. Then convergence results say that for any solution of the continuous-time inclusion,* there exists *an approximated solution of the discrete inclusion. Conversely, any solution of the discrete inclusion approximates* some *solution of the continuous time inclusion. If the differential inclusion has a finite number of solutions, then it may be possible to select which one is being approximated (like e.g. $\dot{x}(t) \in sgn(x(t))$, $x(0) = 0$ which has three solutions). When it has an infinity of solutions (like e.g. $\dot{x}(t) \in [-1, 1]$), one may question the modeling step. It is certainly possible to design observers for systems which may have multiple solutions, as done e.g. in [33]. However it is expected that similar convergence issues will occur.*

3 Problem statement (linear case)

Two main classes of multifunctions $F(t, x)$ in (1) will be considered in this paper. They correspond to sections 2.2 and 2.3, respectively. The rationale behind these choices is the need for existence and uniqueness results, both for the observed system and for the observer dynamics.

3.1 Time-invariant multifunction

Consider the system whose state space equations are given by the following differential inclusion (see figure 1):

$$\begin{cases} \dot{x}(t) = Ax(t) - Gw(t) + Bu(t) \\ w(t) \in \varrho(Hx(t)) \\ y(t) = Cx(t), \quad x(0) = x_0 \in \mathrm{dom}(\varrho \circ H) \end{cases} \tag{9}$$

where $A \in \mathbb{R}^{n\times n}$, $B \in \mathbb{R}^{n\times m}$, $G \in \mathbb{R}^{n\times l}$ is full column rank, $H \in \mathbb{R}^{l\times n}$ and $C \in \mathbb{R}^{p\times n}$. The mapping $\varrho : \mathbb{R}^l \to \mathbb{R}^l$ is assumed to be maximal monotone and $u(\cdot)$ is locally AC. Notice that (9) is equivalently rewritten as

$$\begin{cases} -\dot{x}(t) + Ax(t) + Bu(t) \in G\varrho(Hx(t)) \\ y(t) = Cx(t), \quad x(0) = x_0 \in \mathrm{dom}(\varrho \circ H) \end{cases} \tag{10}$$

Remark 3 *Certain multivalued mappings $\varrho(\cdot)$ that are not monotone, can be transformed into monotone mappings by using the loop transformation technique (see for instance [8, §3.10] [43, §5.6.2]). An example of such a mapping is given in [29]. With loop transformation, a new mapping is defined, as $\tilde{\varrho}(z) = \varrho(z) - Mz$, where M is a matrix of appropriate dimensions, chosen so that the mapping $\tilde{\rho}(z)$ is maximal monotone. If we then replace the system matrix A in* (9) *by $\tilde{A} = A - GMH$, we obtain a system* (9) *that satisfies the above mentioned assumptions.*

It is important to guarantee that the system (10) whose state $x(\cdot)$ is to be observed, is well-posed. This may be supposed without further analysis and conditions on the matrices (A, B, C, G, H).

Assumption 1 *The system in (10) possesses a unique locally AC solution on $[0, +\infty)$ for any $x(0) \in \mathrm{dom}(\varrho \circ H)$.*

However let us provide some insights on cases where (10) fits within (3) and Theorem 1. Suppose for instance that the triple (A, G, H) is SPR, so that it satisfies the KYP Lemma LMI in (2) (with G instead of B and H instead of C). Let us perform the state transformation $z = Rx$, where $R^2 = P$ and $R = R^T > 0$. Proceeding similarly as in [5] one can rewrite the dynamics in (10) as

$$\begin{cases} -\dot{z}(t) + RAR^{-1}z(t) + RBu(t) \in R^{-1}H^T\varrho(HR^{-1}z(t)) \\ y(t) = CR^{-1}z(t), \; z(0) = z_0 = Rx_0, x_0 \in \mathrm{dom}(\varrho \circ H) \end{cases} \tag{11}$$

From the rank condition on G it follows that the multivalued mapping $z \mapsto R^{-1}H^T\varrho(HR^{-1}z)$ is maximal monotone [38, theorem 12.43], so that the mapping $z \mapsto -RAR^{-1}z + R^{-1}H^T\varrho(HR^{-1}z)$ is also maximal monotone. Therefore the well-posedness of (11), and consequently that of (10), follow from Theorem 1. One concludes that the SPRness of (A, G, H) permits to assure the existence and uniqueness of locally AC solutions of the multivalued system. In order to relax this assumption, let us make the following assumptions on the system (10): the triple (A, G, H) is strictly minimum phase, $B = G$, $H = C$ and HG is symmetric positive definite. Then from [8, Theorem 2.64] it follows that the system can be made SPR by a suitable feedback $u = KHx + v$, with $v(\cdot)$ the new input. Therefore, provided this assumption holds, one can recast by a suitable output feedback the multivalued system (10) into (3), and guarantee its well-posedness. The resulting new system has a new transition matrix $A+GKH$. Without loss of generality and in order to avoid working with the new system $(A+GKH, G, H)$ (several other matrices will be used throughout the paper and simplifying the notation is worthwhile) we suppose that such a feedback transformation has already been applied to the system (10). In fact from [8, Theorem 3.35] the strict minimum phase property may be relaxed to minimum phase and the same reasoning may be applied. In case $B \neq G$, one may resort to an LMI similar to the one in (18) to guarantee that $(A + BKH, G, H)$ is SPR for some K. Another case that makes (10) fit within (3) and Theorem 1 is when $G = H^T$ and rank$(H) = l$, and $A \geq 0$. Then the mapping $x \mapsto G\varrho(Hx)$ is maximal monotone [38, Theorem 12.43] and so is $x \mapsto -Ax + G\varrho(Hx)$.

Remark 4 *The state transformation performed to get (11) will be instrumental in all the well-posedness proofs in this paper, and also for the observers design and the error dynamics stability study. Performing state space transformations is a common practice in observer design for nonlinear systems [19, 20, 42, 10]. The conditions to be imposed on the system so that it is well-posed may appear stringent. However they are a consequence of Theorem 1 which relies on the maximal monotonicity of the multivalued mapping. On the other hand the* uniqueness *of the solutions is assured, not only the existence. It will be seen later that the strict dissipativity also assures the uniqueness of the fixed point of the error dynamics, so that global stability result can be obtained. Relaxing the strict dissipativity (SPR in the linear case) to a less stringent notion (like PRness), with an observability condition so that the KYP Lemma solution satisfies $P > 0$, is certainly possible at the price of allowing for multiple equilibria and local convergence results. This is not the object of this paper.*

3.2 Time-varying multifunction

Let us consider a time-varying multifunction $\varrho(t,x) = \partial\psi_{S(t)}(Hx) = N(S(t);Hx)$ where $S(t) \subset I\!R^l$ is a set that satisfies the assumptions of Theorem 2, and $u(\cdot)$ is locally AC. Thus the considered multivalued system is

$$\begin{cases} -\dot{x}(t) + Ax(t) + Bu(t) \in G\partial\psi_{S(t)}(Hx(t)) \\ \\ y(t) = Cx(t), \quad Hx(0) = Hx_0 \in S(0) \end{cases} \tag{12}$$

As above a first instance where Theorems 2 may be applied to (12) is when $G = H^T$ and G is full column rank. Then it follows that $G\partial\psi_{S(t)}(Hx) = H^T\partial\psi_{S(t)}(Hx) = N(S'(t);x)$ where $S'(t) = \{x \in I\!R^n \ \mid \ Hx \in S(t)\} \subset I\!R^n$, see lemma 11 (the rank assumption assures that $S'(t)$ is not empty; letting $\mathcal{H} : x \mapsto Hx$, we have $S'(t) = \mathcal{H}^{-1}(S(t))$). Another interesting case is when (A, G, H) is SPR (or it has been made SPR by suitable feedback). Using the same variable change $z = Rx$ as the one used to transform (10) into (11), one may conclude from Theorem 2 that the differential inclusion in (12) has one and only one AC solution $x(\cdot)$ on $I\!R^+$. Let us now consider $S(\cdot)$ that satisfies the assumptions of Theorem 3, i.e. it is locally RCBV. Then the solution may have jumps and (12) has to be rewritten as a measure differential inclusion:

$$\begin{cases} -dx + Ax(t)dt + Bu(t)dt \in GN(S(t);Hx(t)) \\ \\ y(t) = Cx(t), \quad Hx(0) = Hx_0 \in S(0) \end{cases} \tag{13}$$

Doing the same assumptions one deduces from Theorem 3 that the differential inclusion in (12) has one and only one locally RCBV solution on $I\!R^+$. Examples of systems that fit within this framework are electrical circuits with ideal diodes [7, 22].

Example 1 *Consider a linear complementarity system*

$$\begin{cases} \dot{x}(t) = Ax(t) + B\lambda(t) + Eu(t) \\ \\ 0 \leq \lambda(t) \perp w(t) = Dx(t) + Gu(t) + F \geq 0, \end{cases} \tag{14}$$

with $\lambda(t), w(t) \in I\!R^m$, (A, B, D) positive real and B has full column rank. Using some basic convex analysis and a variable change $z = Rx$ as above, it is not difficult to prove that (14) can be rewritten as

$$-\dot{z}(t) + RAR^{-1}z(t) + REu(t) \in N(S(t);z(t)) \ \ (= \varrho(z(t),u(t))), \tag{15}$$

with $S(t) \triangleq R(K(t)) = \{Rx \ \mid \ x \in K(t)\} \subset I\!R^n$ and $K(t) \triangleq \{x \in I\!R^n \ \mid \ Dx + Gu(t) + F \geq 0\} \subset I\!R^n$. The non emptyness of $K(t)$ for each $t \geq 0$ is guaranteed by some constraint qualification. For instance $F \geq 0$, or Im$(D) = I\!R^m$ are sufficient conditions. Some nonsmooth electrical circuits with ideal diodes, or other piecewise linear components, can be recast under such a framework. Clearly the set $S(t)$ may jump when $u(\cdot)$ is of locally bounded variation. From Lemma 10 (with slight notation adaptation) it follows that when $u(\cdot)$ is locally AC (resp. locally RCBV), then $S(\cdot)$ is locally AC (resp. RCBV). In the RCBV case, the state $x(\cdot)$ may also possess jumps, and the system in (14) has to be embedded into the measure differential inclusion formalism of section 2.3. LCS

as in (14) can be recast into Moreau's perturbed sweeping process. More on the relationships between differential inclusions and complementarity systems may be found in [6]. Systems as in (14) are a particular subclass of complementarity systems. The observability of another subclass (with complementarity conditions of the form $0 \leq \lambda(t) \perp w(t) = Dx(t) + Gu(t) + F\lambda(t) \geq 0$*) has been thoroughly studied in [11].*

As we shall see later (e.g. in the proof of Lemma 2), the time-dependency of the set $S(\cdot)$ may also stem from the observer structure, despite the system's multifunction is itself time-invariant. Thus considering time-varying sets is an important point.

Remark 5 *The problem that is tackled in sections 3.1 and 3.2 may be formulated as follows. Given a sextuple* $(A, G, H, B, C, \varrho(\cdot,\cdot))$*, does there exist an output feedback* $u = KCx + v$ *and a state space transformation* $z = Rx$ *such that the system is transformed into a differential inclusion as in (3) or (6)? In such a case we may call the sextuple output feedback monotonifiable (OFM). Let for instance* $\varrho(\cdot) = \partial f(\cdot)$ *for some proper, convex lower semi continuous function* $f(\cdot)$*. From the above manipulations one sees that* $(A, G, H, B, C, \partial f(\cdot)$ *is OFM provided* $(A + BKC, G, H)$ *is SPR. Then from [8, Lemma 3.7] and [38, Proposition 11.3, Example 12.8, §5.A] it follows that* $(A^T, H^T, G^T, C^T, B^T, \partial f^*(\cdot))$ *is OFM also.*

3.3 Observers structure

The first proposed observer ("basic" observer scheme) for the system (9) has the following form:

$$\begin{cases} \dot{\hat{x}}(t) = (A - LC)\hat{x}(t) - G\hat{w}(t) + Ly(t) + Bu(t) \\ \hat{w}(t) \in \varrho(H\hat{x}(t)) \\ \hat{y}(t) = C\hat{x}(t) \end{cases} \tag{16}$$

where $L \in \mathbb{R}^{n\times p}$ and $H\hat{x}(0) \in \mathrm{dom}(\varrho)$. The second proposed observer ("extended" observer scheme) has the following form:

$$\begin{cases} \dot{\hat{x}}(t) = (A - LC)\hat{x}(t) - G\hat{w}(t) + Ly(t) + Bu(t) \\ \hat{w}(t) \in \varrho((H - KC)\hat{x}(t) + Ky(t)) \\ \hat{y}(t) = C\hat{x}(t) \end{cases} \tag{17}$$

where $K \in \mathbb{R}^{l\times p}$ and $\hat{x}(0)$ are such that $(H - KC)\hat{x}(0) + Ky(0) \in \mathrm{dom}(\varrho)$. The basic observer is a special case of the extended observer with $K = 0$. When the time-varying multifunction case is considered, then the observers keep the same structure, see section 4.2. The reason for treating these two cases separately is that the well-posedness conditions for the two proposed observers (i.e. conditions for the existence and uniqueness of solutions) and the stability analysis or the error dynamics, are significantly different and have a strong influence on the type of multifunction which may be considered, i.e. on the system to be observed itself. To summarize, the case ($\rho(\cdot)$ time invariant + basic obesrver) yields an error dynamics with time invariant set-valued functions. The other cases ($\rho(\cdot)$ time invariant + extended observer), or ($\rho(\cdot,\cdot)$ time varying), yield error dynamics with time varying set-valued functions. Also, the well-posedness proofs are more readable if the cases are treated separately. Stability of the error dynamics will be treated only for the case of the extended observer, as the result for the basic observer follows then immediately. The gains L and K can be computed such that $(A - LC, G, H - KC)$ is SPR. This can be achieved by solving the matrix inequality:

$$\begin{aligned} &(A - LC)^\top P + P(A - LC) = -Q < 0 \\ &G^\top P = H - KC. \end{aligned} \tag{18}$$

Inequality (18) is a linear matrix inequality in P, K, $L^\top P$. For necessary and sufficient conditions for the existence of solutions for (18), see for instance [3, Lemma 1].

4 Main results (linear case)

The problem of observer design consists in finding the gain L (or L, K for the extended observer) which will guarantee that there exists a unique solution $\hat{x}(\cdot)$ to the observer dynamics on $[0, \infty)$, and that $\hat{x}(t) \to x(t)$ as $t \to \infty$. In this section we assume that if L and K are chosen such that the triple $(A - LC, G, H)$ (respectively $(A - LC, G, H - KC)$) is SPR (see (17)). Then we show that the obtained observer (16) ((17), respectively) will satisfy the mentioned requirements.

4.1 Time-invariant multifunction

This section is devoted to study observers for the system (9) (or equivalently (10)).

4.1.1 Observers well-posedness

To prove that SPR property of $(A - LC, G, H - KC)$ guarantees the proper behavior of the observer, we start of with two lemmas on well-posedness. Note that the well-posedness of the observers (16) and (17) is also essential in ensuring the proper behavior of a numerical implementation.

Lemma 1 *Consider the system* (9)*, and the observer* (16)*. Let the triple* $(A - LC, G, H)$ *be SPR. If* $u(\cdot)$ *is locally AC then the observer dynamics* (16) *has a unique locally AC solution on* $[0, \infty)$.

Proof: Since the triple $(A - LC, G, H)$ is SPR and G has full column rank there exist P, Q that satisfy (2). Introduce the change of variables:

$$z = R\hat{x} \tag{19}$$

where $RR = P$, $R = R^\top > 0$. Then, (16) transforms into:

$$\begin{cases} \dot{z}(t) = R(A - LC)R^{-1}z(t) - RG\hat{w}(t) + RBu(t) + RLy(t) \\ \hat{w}(t) \in \varrho(HR^{-1}z(t)) \\ \hat{y}(t) = CR^{-1}z(t) \end{cases} \tag{20}$$

Since $H\hat{x}(0) \in \mathrm{dom}(\varrho)$, we have $HR^{-1}z(0) \in \mathrm{dom}(\varrho)$. Define the mapping $f : \mathbb{R}^n \to \mathbb{R}^n$ as $f(z) = R^{-1}H^\top\varrho(HR^{-1}z)$. Note that using the SPR condition (2b), (20) can now be written as:

$$\dot{z}(t) \in R(A - LC)R^{-1}z(t) - f(z(t)) + RBu(t) + RLy(t) \tag{21}$$

where $z \in \mathrm{dom}\, f(\cdot)$. From the SPR condition (2b) it follows that H and HR^{-1} have full row rank l, and together with the fact that $\varrho(\cdot)$ is maximal monotone we have that $f(\cdot)$ is maximal monotone as well [38, theorem 12.43]. From the SPR condition (2a) it follows that $R(A - LC)R^{-1} + R(A - LC^\top)R^{-1}$ is negative definite. Hence the mapping $z \mapsto -R(A - LC)R^{-1}z + f(z)$ is maximal monotone [38, Corollary 12.44]. Since the signal $u(\cdot)$ is locally AC, and hence $y(\cdot)$ is also locally AC by Theorem 1, existence and uniqueness of locally AC solutions to (21) and (16) follow from Theorem 1. ■

Remark 6 *The proof of Lemma 1 extends the proof of [5, Lemma 1] to the non-autonomous case.*

In the following lemma we address the question of well-posedness of the extended observer scheme. For this we shall consider a particular class of mappings $\varrho(\cdot)$. The reason why will be clear in the proof.

Lemma 2 *Consider the system* (9) *with* $\varrho(\cdot) = \partial\psi_S(\cdot)$*, and the observer* (17)*. The set* $S \subset I\!R^l$ *is supposed to be nonempty polyhedral. Let the signal* $u(\cdot)$ *be locally AC. If the triple* $(A - LC, G, H - KC)$ *is SPR, the observer dynamics* (17) *has a unique locally AC solution on* $[0, \infty)$.

Proof: Since the triple $(A-LC, G, H-KC)$ is SPR and G has full column rank there exist P, Q that satisfy (2). Let us introduce the change of variable (19) in (17), where as before, $RR = P$, $R = R^T > 0$. In the same way as in the proof of Lemma 1, (17) transforms into:

$$\begin{aligned} \dot{z}(t) \in \quad & R(A-LC)R^{-1}z(t) - R^{-1}(H-KC)^T \varrho((H-KC)R^{-1}z(t) + Ky(t)) \\ & +RBu(t) + RLy(t) \end{aligned} \tag{22}$$

where $z(0) \in \mathrm{dom}(f)$. Let $g : z \mapsto \psi_S((H-KC)R^{-1}z + Ky(t))$. Then $g(z,t) = \psi_{S'(t)}(z)$ with $S'(t) = \{z \in I\!R^n \mid (H-KC)R^{-1}z + Ky(t) \in S\} \subset I\!R^n$, and $\partial g(z,t) = \partial\psi_{S'(t)}(z) = N(S'(t); z) = R^{-1}(H-KC)^T\rho((H-KC)R^{-1}z(t) + Ky(t))$. Therefore one can rewrite (22) as

$$-\dot{z}(t) + R(A-LC)R^{-1}z(t) - RBu(t) - RLy(t) \in N(S'(t); z(t)) \tag{23}$$

that fits within (8). It follows from Lemma 10 that if $y(\cdot)$ is locally AC, then $S'(\cdot)$ is locally AC. Then from Theorem 3 the result follows. ■

If one considers $G = 0$ in (14), then the set $S(t)$ is a constant polyhedral set S and the obtained nonsmooth system has a well-posed extended observer. Consequently Lemma 2 applies to linear complementarity systems as (14) with $G = 0$. If $K = 0$ (basic observer), then the set S needs not be polyhedral. Assumption **(A1)** is sufficient to apply Theorem 2. If $K = 0$ and S is convex we are back to Lemma 1.

Example 2 *Consider the system in (14) with $G = 0$. Using $0 \leq \lambda \perp w \geq 0 \quad \Leftrightarrow \quad \lambda \in -\partial\psi_S(w)$ with $S = (I\!R^+)^m$, it may be equivalently written as the inclusion*

$$\dot{x}(t) - Ax(t) - Eu(t) \in -B\partial\psi_S(Dx(t) + F) \tag{24}$$

with output $y = Cx$. So $\rho(\cdot) = \partial\psi_S(\cdot)$. The basic observer takes the form

$$\dot{\hat{x}}(t) = (A-LC)\hat{x}(t) - B\partial\psi_S(D\hat{x}(t) + F) + Eu(t) \tag{25}$$

Obviously some constraint qualification is needed to guarantee that the set-valued mapping has a non empty domain. Lemma 1 applies.

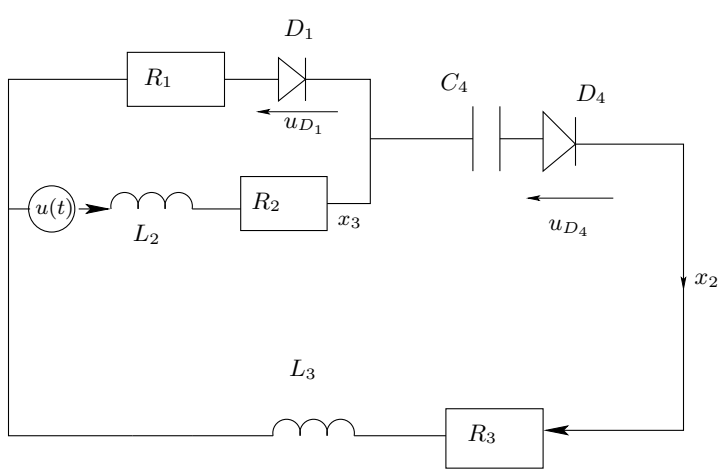

Figure 3: A circuit with ideal diodes.

Example 3 *As an example we may consider the electrical circuit of figure 3, with $R_1, R_2, R_3 \geq 0$, $L_2, L_3 > 0$. One has $0 \leq -u_{D_4} \perp x_2 \geq 0$ and $0 \leq -u_{D_1} \perp -x_3 + x_2 \geq 0$, where u_{D_4} and u_{D_1} are the voltages of the diodes. The dynamical equations of this circuit are the following ones*

$$\begin{cases} \dot{x}_1(t) = x_2(t) \\ \dot{x}_2(t) = -\left(\frac{R_1+R_3}{L_3}\right) x_2(t) + \frac{R_1}{L_3} x_3(t) - \frac{1}{L_3 C_4} x_1(t) + \frac{1}{L_3}\zeta_1(t) + \frac{1}{L_3}\zeta_2(t) + \frac{u(t)}{L_3} \\ \dot{x}_{3(t)} = -\left(\frac{R_1+R_2}{L_2}\right) x_3(t) + \frac{R_1}{L_2} x_2(t) - \frac{1}{L_2}\zeta_1(t) + \frac{u(t)}{L_2} \\ 0 \leq \begin{pmatrix} \zeta_1(t) \\ \zeta_2(t) \end{pmatrix} \perp \begin{pmatrix} -x_3(t) + x_2(t) \\ x_2(t) \end{pmatrix} \geq 0, \end{cases} \tag{26}$$

where $x_1(\cdot)$ is the time integral of the current across the capacitor, $x_2(\cdot)$ is the current across the capacitor, and $x_3(\cdot)$ is the current across the inductor L_2 and resistor R_2, $-\zeta_1$ is the voltage of the diode D_1 and $-\zeta_2$ is the voltage of the diode D_4. The system in (26) can be written compactly as $\dot{x}(t) = Ax(t) + B\lambda(t) + Eu(t)$, $0 \leq \lambda(t) \perp y(t) = Cx(t) \geq 0$. The corresponding set $S(t)$ in (15) is therefore no longer time-dependent and the system fits within (10).

Notice that as far as the observer dynamics is concerned, $y(t) = Cx(t)$ appears as an exogeneous signal, i.e. a function of time. This justifies the definition of the set $S'(t)$ as a time-dependent set. It is considered in Theorem 1 that the funtion $f(\cdot)$ is locally AC. By imposing some more conditions on the multifunction $F(x)$, it may be assumed that $f(\cdot)$ is measurable. However the solution $x(\cdot)$ still belongs to AC functions and the result of Lemma 2 is not changed. The particular form of the multifunction $\varrho(\cdot)$ in Lemma 2 allows us to prove the well-posedness of the extended observer dynamics, which would not be possible for a general maximal monotone mapping. The polyhedral property of the set S is instrumental in the proof of Lemma 10 and cannot be avoided.

4.1.2 Stability of the error dynamics

For the extended observer (17) the observation error $e \triangleq x - \hat{x}$ dynamics can be formed as:

$$\dot{e}(t) = (A - LC)e(t) - G(w(t) - \hat{w}(t)) \tag{27a}$$

$$w(t) \in \varrho(Hx(t)) \tag{27b}$$

$$\hat{w}(t) \in \varrho(H\hat{x}(t) + K(y(t) - \hat{y}(t))) \tag{27c}$$

As said above the basic observer is deduced from the extended one, by imposing $K = 0$. Then we saw that this has important consequences on the type of multifunction $\varrho(\cdot)$ that can be considered for well-posedness analysis. Here we focus on the extended observer case only, keeping in mind that the analysis for the basic observer is quite similar (and simpler). This means that we shall take $\varrho(\cdot) = \partial\psi_S(\cdot)$. Note that the point e_0 is a fixed point (equilibrium) of system (27) for a given x-trajectory if it satisfies the following inclusion for all $t > 0$:

$$0 \in (A - LC)e_0 - G[\varrho(Hx(t)) - \varrho(H\hat{x}(t) + KCe_0)] \tag{28}$$

where $\hat{x}(t) = x(t) - e_0$. The following theorem states one of the main results of the paper, where it is assumed that both the system and the observer are well-posed (i.e. they enjoy the existence and uniqueness property of a locally AC solution on $[0, +\infty)$).

Theorem 4 *Consider the observed system* (9)*, the extended observer* (17)*, where the triple $(A - LC, G, H - KC)$ is SPR, and the observation error dynamics* (27)*. It is further assumed that the conditions of Lemma 2 are satisfied. The point $e = 0$ is the unique fixed point of the observation error dynamics* (27) *and is globally exponentially stable.*

Proof: Note that $e_0 = 0$ is indeed a fixed point of (27). For $e_0 = 0$, $x = \hat{x}$, and since the arguments of the $\varrho(\cdot)$ mappings in (27b),(27c) are the same it follows that $0 \in \varrho(Hx(t)) - \varrho(H\hat{x}(t) + KCe_0)$ for all $t \geq 0$, and hence $e_0 = 0$ satisfies the inclusion (28). Next, we show that $e_0 = 0$ is the only fixed point. From $(A - LC)e_0 \in G(\varrho(Hx) - \varrho(H\hat{x} + KCe_0))$ for all $t \geq 0$ it follows that $P(A - LC)e_0 \in PG(\varrho(Hx(t)) - \varrho(H\hat{x}(t) + KCe_0))$ for some t. Using the SPR condition (2b) we get the following condition for the fixed point e_0:

$$e_0^\top P(A - LC)e_0 = ((H - KC)e_0)^\top (w - \hat{w})$$

where $w \in \varrho(Hx(t))$ and $\hat{w} \in \varrho(H\hat{x}(t) + KCe_0)$. From the SPR condition (2a) it follows that $e_0^\top P(A - LC)e_0 \leq 0$. From the monotonicity of $\varrho(\cdot)$ it follows that $e_0^\top P(A - LC)e_0 = ((H - KC)e_0)^\top (w - \hat{w}) \geq 0$. Hence, $e_0 = 0$ is the only solution of the inclusion (28).

To show that the unique fixed point $e_0 = 0$ is globally exponentially stable consider the Lyapunov function $V(e) = \frac{1}{2}e^\top Pe$. Since $x(\cdot)$ and $\hat{x}$ are locally AC, it follows that $e(\cdot)$ is also locally AC, and $\dot{e}(\cdot)$ exists almost everywhere. Hence, $V(\cdot)$ is also AC, and the derivative $\dot{V}(\cdot)$ exists almost everywhere. The function $\dot{V}(\cdot)$ satisfies:

$$\begin{aligned} \dot{V}(e(t)) &= e^\top(t)P\dot{e}(t) \\ &= e^\top(t)P((A - LC)e(t) - G(w(t) - \hat{w}(t))) \\ &= -\tfrac{1}{2}e^\top(t)Qe(t) - e^\top(t)(H - KC)^\top(w(t) - \hat{w}(t)) \end{aligned} \tag{29}$$

for some $w(\cdot), \hat{w}(\cdot)$ satisfying (27b),(27c), and $Q > 0$ such that the inequality in (18) is satisfied. Let us consider $f(x,t) = (H-KC)^\top \varrho[(H-KC)x+Ky(t)] = (H-KC)^\top \partial\psi_S[(H-KC)x+Ky(t)] = N(S'(t);x)$, see Lemma 11. The set $S(t)$ is closed convex nonempty for each $t \in I\!R^+$. It follows that for each t the mapping $f(\cdot,t)$ is maximal monotone. Thus $e^\top(t)(H-KC)^\top(w(t)-\hat{w}(t)) = (x(t)-\hat{x}(t))^T(H-KC)^\top(w(t)-\hat{w}(t)) \geq 0$ since $w(t) \in N(S'(t);x(t))$ and $\hat{w}(t) \in N(S'(t);\hat{x}(t))$. Therefore:

$$\dot{V}(e(t)) \leq -\frac{1}{2}e^\top(t)Qe(t) \tag{30}$$

From $V(e(t)) \leq V(e(0)) - \frac{1}{2}\int_0^t e^\top(\tau)Qe(\tau)d\tau$ it follows that the AC function of time $V(\cdot)$ is nonincreasing, and $\frac{1}{2}\lambda_{min}(P)e^\top(t)e(t) \leq V(e(0)) - \frac{1}{2}\int_0^t \lambda_{min}(Q)e^\top(\tau)e(\tau)d\tau$ where $\lambda_{min}(\cdot)$ denotes the minimal eigenvalue. From Gronwall's lemma [43]:

$$\frac{1}{2}\lambda_{min}(P)e^\top(t)e(t) \leq V(e(0))\exp\left(-\frac{\lambda_{min}(Q)}{\lambda_{min}(P)}t\right). \tag{31}$$

This proves the exponential convergence of the observation error. ■

The analysis in this section has been led for the extended observer, which imposes to us a restriction on the class of set-valued functions to be considered. A quite similar analysis can be led if one considers the basic observer dynamics, which then allows one to take into account maximal monotone set-valued mappings $\varrho(\cdot)$ which are not necessarily normal cones to polyhedral sets S (but are time-invariant multivalued mappings). For the sake of briefness of the paper we do not present all the possible cases.

4.2 Time-varying multifunctions

Let us now deal with systems such that the multifunction that appears in the right-hand-side is time-varying. More specifically, we shall consider $\varrho(x,t) = \partial\psi_{S(t)}(Hx(t)) = N(S(t);Hx(t))$, $S(t) \subset I\!R^l$, where $S(\cdot)$ satisfies assumptions **(A1)**, and **(A2)** or **(A3)**. We consider the system in (13), or equivalently in (12), and we study the extended observer dynamics. Since $S(\cdot)$ may be locally RCBV, it is expected that solutions $x(\cdot)$ and $\hat{x}(\cdot)$ will jump. Thus we first rewrite the extended observer dynamics (17) as a measure differential inclusion:

$$-d\hat{x} + (A - LC)\hat{x}(t)dt + Bu(t)dt + Ly(t)dt \in GN(S(t);(H - KC)\hat{x}(t) + Ky(t)) \tag{32}$$

which is the observer for the system in (13).

4.2.1 Observer well-posedness

We have the following:

Lemma 3 *Consider the system (13) and the observer (32). Let the triple $(A - LC, G, H - KC)$ be SPR. If $u(\cdot)$ is locally AC, and if $S(\cdot)$ is polyhedral for each $t \geq 0$ and locally AC (resp. polyhedral and locally RCBV), then the observer dynamics (32) has a unique locally AC (resp. locally RCBV) solution on $[0, +\infty)$.*

We omit the proof which is quite similar to the foregoing proofs. It relies on Theorems 2 (for the locally AC case) and 3 (for the locally RCBV case). Once again the polyhedrality is due to Lemma 10 when $K \neq 0$.

Lemma 4 *Consider the system in (13) and the observer (32) with $K = 0$. Let the triple $(A - LC, G, H)$ be SPR. If $u(\cdot)$ is locally AC and if $S(\cdot)$ satisfies* **(A1)** *and* **(A2)**, *the observer dynamics (32) has a unique locally AC solution on $[0, +\infty)$.*

Example 4 *A circuit that consists of an ideal diode, a current source and an inductor, mounted in parallel, has the dynamics*

$$\begin{cases} \dot{x}(t) = \lambda(t) \\ \\ 0 \leq x(t) + u(t) \perp \lambda(t) \geq 0 \end{cases} \tag{33}$$

which can easily be rewritten as the inclusion $\dot{x}(t) \in N(S(t); x(t))$ with $S(t) = \{x \mid x + u(t) \geq 0\}$. Let $u(\cdot)$ be locally RCBV. Then $x(\cdot)$ may jump and the extended observer for (33) has a locally RCBV state $\hat{x}(\cdot)$ (recall that in such a case the inclusion has to be rewritten as a measure differential inclusion as (6)).

Example 5 *Consider the complementarity system in (14). The dynamics can be equivalently rewritten as*

$$\begin{aligned} -\dot{x}(t) + Ax(t) + Eu(t) &\in B\partial\psi_{(\mathbb{R}^+)^m}(Dx(t) + Gu(t) + F) \\ &= BN(\bar{S}(t); Dx(t)) \end{aligned} \tag{34}$$

with $\bar{S}(t) = \{z \in \mathbb{R}^m \mid z + Gu(t) + F \geq 0\} \subset \mathbb{R}^m$. One sees that (A, B, D) in (34) plays the role of (A, G, H) in (13). The observer dynamics (32) designed for (14) with a measured output $y = Cx$ is therefore

$$\begin{cases} -d\hat{x} + (A - LC)\hat{x}(t)dt + Eu(t)dt + Ly(t)dt \in BN(\bar{S}(t); (D - KC)\hat{x}(t) + Ky(t)) \\ \\ y(t) = Cx(t), \end{cases} \tag{35}$$

which becomes in the complementarity formalism (written here in the locally AC case, but the RCBV formalism of Lemma 3 works also in this case)

$$\begin{cases} \dot{\hat{x}}(t) = (A - LC)\hat{x}(t) + Eu(t) + Ly(t) + B\lambda(t) \\ \\ 0 \leq \lambda(t) \perp \hat{w}(t) = (D - KC)\hat{x}(t) + Ky(t) + Gu(t) + F \geq 0 \\ \\ y(t) = Cx(t). \end{cases} \tag{36}$$

Notice that we use the same notation $\lambda(t)$ for the multiplier in both (36) and (14). However they obviously are two different signals.

4.2.2 Stability of the error dynamics

We first focus on the locally RCBV case and with $S(t)$ nonempty polyhedral sets for each $t \geq 0$. The observation error dynamics is the measure differential inclusion

$$\begin{cases} -de + (A - LC)e(t)dt \in G\left\{N(S(t); (H - KC)x(t) + Ky(t)) - N(S(t); (H - KC)\hat{x}(t) + Ky(t))\right\} \\ e(0) = x(0) - \hat{x}(0),\ Hx(0) \in S(0), (H - KC)\hat{x}(0) + KCx(0) \in S(0) \end{cases} \tag{37}$$

which by Lemma 3 possesses a unique locally RCBV solution on $[0, +\infty)$ (the system in (13) also enjoys this property). Before studying the stability, we need to characterize the state jumps.

Lemma 5 *The state of the error dynamics (37) satisfies at the atoms of the differential measure de*

$$e(t^+) = R^{-1}prox[S'(t^+); Rx(t^-)] - R^{-1}prox[S'(t^+); R\hat{x}(t^-)] \tag{38}$$

where $RR = P$, $R = R^T > 0$ and $P > 0$ is the solution of the KYP Lemma LMI for the triple $(A - LC, G, H - KC)$, $S'(t) = \{z \in I\!R^n \mid (H - KC)\hat{R}^{-1}z + Ky(t) \in S(t)\} \subset I\!R^n$.

Proof: the system (13) can be transformed into

$$-dz + R(A - LC)R^{-1}z(t)dt + RLy(t)dt + RBu(t)dt \in N(S'(t^+); z(t^+)) \tag{39}$$

with the coordinate change $z = Rx$. Similarly the system (32) can be transformed into

$$-d\hat{z} + R(A - LC)R^{-1}\hat{z}(t)dt + RBu(t)dt + RLy(t)dt \in N(S'(t^+); \hat{z}(t^+)) \tag{40}$$

with the change of coordinates $\hat{z} = R\hat{x}$. At atoms we have $\frac{dt}{d\nu} = 0$ and $de = [e(t^+) - e(t^-)]d\delta_t$ where the measure ν is as in (5) and δ_t is the Dirac measure at time t. Using (7) one deduces that $z(t^+) = \text{prox}[S'(t^+); z(t^-)]$ and $\hat{z}(t^+) = \text{prox}[S'(t^+); \hat{z}(t^-)]$. Since $e = x - \hat{x} = R^{-1}(z - \hat{z})$ the result follows. ■

Let us now proceed with the stability analysis. This is led with the Lyapunov function $V(e) = \frac{1}{2}e^T Pe$. We recall that Moreau's rule for the subdifferentiation of quadratic functions of locally RCBV functions yields $dV = \frac{1}{2}(e(t^+) + e(t^-)^T Pde$ for all $t \geq 0$ [31, p.8].

Theorem 5 *Consider the system in (13) together with the extended observer in (32), with the triple $(A - LC, G, H - KC)$ being SPR, and the error dynamics (37). Let us further assume that the sets $S(t) \subset I\!R^l$ are nonempty convex for each t. Then the point $e_0 = x - \hat{x} = 0$ is globally asymptoticallly stable.*

Proof: The point $e_0 = 0$ is the unique fixed point of the error dynamics (the proof, which uses the fact that the multivalued mappings $N(S(t), \cdot)$ are maximal monotone for each t, is similar as the one in the proof of Theorem 4 and is omitted). Let us focus on the variation of the function $V(e) = \frac{1}{2}e^\top Pe$ at the atoms of de. One has

$$\begin{aligned} \text{prox}[S'(t^+); Rx(t^-)] - \text{prox}[S'(t^+); R\hat{x}(t^-)] \quad &\leq \| Rx(t^-) - R\hat{x}(t^-) \| \\ &= \| Re(t^-) \| = \sqrt{e^\top(t^-)Pe(t^-)} \end{aligned} \tag{41}$$

From (38) it follows that $e^\top(t^+)R^2e(t^+) \leq e^\top(t^-)Pe(t^-)$. Now we have that

$$dV = \frac{1}{2}(e(t^+) + e(t^-))^\top P(e(t^+) - e(t^-)) = \frac{1}{2}e^\top(t^+)Pe(t^+) - \frac{1}{2}e^\top(t^-)Pe(t^-) \leq 0 \tag{42}$$

It follows that the function $V(\cdot)$, which is locally RCBV, is decreasing at state jumps. The rest of the proof is similar to the proof of Theorem 4 and is omitted. ■

It is noteworthy that under the stated assumptions and positive realness, the state jumps of the system and of the observer are dissipative as well. The convexity of the sets $S(t)$ is convenient to assure the monotonocity of the

normal cones considered as set-valued mappings, for each t. In case the sets are $r-$prox-regular but not convex, the monotonicity is replaced by the hypomonotonicity property. Relaxing the convexity severely narrows the stability result as the next theorem shows. Here we deal with the case of locally AC solutions. In what follows the normal cones are understood as the Fréchet normal cones, and we place ourselves in the conditions of Lemma 4.

Theorem 6 *Let $K = 0$ in the observer (32),with $(A-LC, G, H)$ satisfying the LIM (2), $S(\cdot)$ satisfy* **(A1)** *and* **(A2)** *($S(t) \subset I\!R^l$), and $u(\cdot)$ be locally AC, H be full row rank l, and $\lambda_{\min}(Q) > 2$. Suppose that there exists initial data $x(0)$, $\hat{x}(0)$ and an input $u(\cdot)$ such that the trajectories of (12) and (32) satisfy $\| -\dot{z}(t)+RAR^{-1}z(t)+RBu(t) \| < r$ and $\| -\dot{\hat{z}}(t)+R(A-LC)R^{-1}\hat{z}(t)+RBu(t)-RLy(t) \| < r$ respectively, for all $t \geq 0$. Then the error dynamics (37) has an asymptotically stable fixed point $e_0 = x - \hat{x} = 0$.*

Proof: Taking the derivative of the function $V(e) = e^T Pe$ along the solutions of the error dynamics one obtains

$$\dot{V}(e(t)) = -\frac{1}{2}e^\top(t)Qe(t) - e^\top(t)H^\top(w(t) - \hat{w}(t)) \tag{43}$$

where $w(t) \in N(S(t); Hx(t))$ and $\hat{w}(t) \in N(S(t); H\hat{x}(t))$. Let us define the set $S'(t) = \{x \in I\!R^n \mid Hx \in S\} \subset I\!R^n$. Since $S(t)$ is $r-$prox-regular then $S'(t)$ is also $r-$prox-regular ($r-$prox-regularity is preserved by any C^2 transformation). Now from the rank assumption on H one has $N(S'(t); x) = H^\top N(S(t); Hx(t))$ (see Lemma 11), so that

$$H^\top w \in N(S'(t); x), \quad H^\top \hat{w} \in N(S'(t); \hat{x}) \tag{44}$$

From the $r-$prox-regularity one gets

$$e^\top(t)H^\top(w(t) - \hat{w}(t)) = (x(t) - \hat{x}(t))^\top H^\top(w(t) - \hat{w}(t)) \geq - \| e(t) \|^2 \tag{45}$$

for all $H^\top w(t) \in N(S'(t), x)$, $H^\top \hat{w}(t) \in N(S'(t), \hat{x})$, $\| w(t) \| < r$, $\| \hat{w}(t) \| < r$. Taking into account the trajectories constraints of the theorem one sees that these upperbounds are satisfied on $I\!R^+$. Now inserting (45) into (43) and using $\lambda_{\min}(Q) > 2$ it follows that $\dot{V}(e(t)) < 0$ for all $e(t) \neq 0$. Redoing a reasoning quite similar to what is done in the proof of Theorem 4 and still using $\lambda_{\min}(Q) > 2$, yields $-\frac{1}{2}e_0^\top Qe_0 < - \| e_0 \|^2$ while $e_0^\top(H - KC)^\top(w - \hat{w}) \geq - \| e_0 \|^2$. Thus $e_0 = 0$ is the only equilibrium point, that is (locally) asymptotically stable. ■

The fact that the result depends on the existence of a specific control input is not surprizing since the observability generally depends on the input in nonlinear systems. Theorem 6 may be interpreted as a small-input criterion for observability.

4.3 Stabilization with the observed state

In the previous sections we have considered that the input $u(\cdot)$ was some admissible exogeneous function of time, and all the well-posedness and error stability results have been obtained under this assumption. Let us now consider a control input of the form $u = M\hat{x}$ where $M \in I\!R^{m\times n}$ is a constant matrix gain, and $\hat{x}(\cdot)$ is the estimated state, i.e. the state of the observer system. We therefore have now to consider the interconnection of the observed system and of the observer through this particular input. In this section we shall consider only the case of time-invariant multifunctions to illustrate how the separation principles applies to the class of nonsmooth, nonlinear systems under study.

Let us consider the system in (10), and the basic observer in (16). As proved in section 4.1.2 the error system equilibrium $e = 0$ is exponentially stable. Inserting $u = M\hat{x}$ in the dynamics (10) and in (17) one obtains

$$\begin{cases} \dot{x}(t) \in (A - LC + BM)x(t) - BMe(t) + Ly(t) - G\varrho(Hx(t)) \\ \\ \dot{\hat{x}}(t) \in (A - LC + BM)\hat{x}(t) + Ly(t) - G\varrho(H\hat{x}(t)). \end{cases} \tag{46}$$

Setting $\bar{x}^\top = (x^\top, \hat{x}^\top)^\top$, this may be rewritten as

$$-\dot{\bar{x}}(t) + T^{-1}\begin{pmatrix} A+BM & BM \\ 0_n & A-LC \end{pmatrix} T\bar{x}(t) \in \bar{G}\begin{pmatrix} \varrho(Hx(t)) \\ \varrho(H\hat{x}(t)) \end{pmatrix} \tag{47}$$

with $\bar{G}$ =diag(G, G) and $T = \begin{pmatrix} I_n & 0_n \\ -I_n & I_n \end{pmatrix}$. The challenge is to relate the previous results on the well-posedness and stability of the error dynamics, to the well-posedness and the stability of the closed-loop system (47). A first result is that whatever $u(\cdot)$ the error dynamics can still be written as in (27). Thus, provided the system (46) is well-posed, and provided the conditions for the error dynamics stability are satisfied, the closed-loop system $\dot{x}(t) \in (A+BM)x(t) - BMe(t) - G\varrho(Hx(t))$ stability may be studied. We further define $\bar{P} = \begin{pmatrix} P_1 & 0_n \\ 0_n & P_2 \end{pmatrix}$, $\bar{A} = \begin{pmatrix} A+BM & BM \\ 0_n & A-LC \end{pmatrix}$, $\bar{H}$ =diag(H, H).

Lemma 6 *Let the triples $(A+BM, G, H)$ and $(A-LC, G, H)$ be SPR. Let $P_1(A+BM) + (A+BM)^\top P_1 = Q_1 < 0$ and $P_2(A+BM) + (A+BM)^\top P_2 = Q_2 < 0$, $P_1 = P_1^\top > 0$, $P_2 = P_2^\top > 0$, satisfy $Q_2 - (BM)^\top P_1 Q_1^{-1} P_1 BM < 0$. Then the LMI*

$$\begin{cases} \bar{P}T\bar{G} = T\bar{H}^\top \\ \\ \bar{P}\bar{A} + \bar{A}^\top\bar{P} < 0 \end{cases} \tag{48}$$

is satisfied.

Proof: Simple calculations yield

$$\bar{P}\bar{A} + \bar{A}^\top\bar{P} = \begin{pmatrix} P_1(A+BM) + (A+BM)^\top P_1 & P_1 BM \\ \\ (BM)^\top P_1 & P_2(A+BM) + (A+BM)^\top P_2 \end{pmatrix} \tag{49}$$

Using [8, Theorem A.61], it follows that a necessary and sufficient condition for this matrix to be < 0 is that $Q_1 < 0$ and $Q_2 - (BM)^\top P_1 Q_1^{-1} P_1 BM < 0$. The first equality can be shown by straight calculations and using the SPRness conditions. ■

Let $\bar{R}\bar{R}^\top = \bar{P}$, $\bar{R}$ =diag$(R_1, R_2) > 0$. Defining $\bar{z} = T\bar{x}$ and $\bar{\xi} = \bar{R}\bar{z}$ we can rewrite (47) as

$$-\dot{\bar{z}}(t) + \bar{A}\bar{z}(t) \in T\bar{G}\begin{pmatrix} \varrho(Hx(t)) \\ \\ \varrho(H\hat{x}(t)) \end{pmatrix} \tag{50}$$

and using the variable change $\bar{\xi} = \bar{R}\bar{z}$ as

$$-\dot{\bar{\xi}}(t) + \bar{R}\bar{A}\bar{R}^{-1}\bar{\xi}(t) \in \bar{R}^{-1}T\bar{H}^\top\begin{pmatrix} \varrho(Hx(t)) \\ \\ \varrho(H\hat{x}(t)) \end{pmatrix} \tag{51}$$

where we used the first equality of (48).

Lemma 7 *The mapping $g : \bar{\xi} \mapsto \bar{R}^{-1}T\bar{H}^\top\begin{pmatrix} \varrho(Hx(t)) \\ \\ \varrho(H\hat{x}(t)) \end{pmatrix}$ is maximal monotone. Therefore the closed-loop system (47) possesses a unique locally AC solution for all $Hx(0)$ and $H\hat{x}(0) \in$ dom$(\varrho(\cdot)$.*

Proof: Once the maximal monotonicity of $g(\cdot)$ has been proved, then the well-posedness follows from Theorem 1 and the linear variable changes.

$$\begin{aligned}
\langle \bar{\xi}_1 - \bar{\xi}_2, g(\bar{\xi}_1) - g(\bar{\xi}_2)\rangle &= \langle \bar{R}T(\bar{x}_1 - \bar{x}_2), \bar{R}^{-1}T\bar{H}^\top \begin{pmatrix} \varrho(Hx_1) - \varrho(Hx_2) \\ \varrho(H\hat{x}_1) - \varrho(H\hat{x}_2) \end{pmatrix}\rangle \\
&= \langle T(\bar{x}_1 - \bar{x}_2), \begin{pmatrix} H^\top\varrho(Hx_1) - H^\top\varrho(Hx_2) \\ -H^\top\varrho(Hx_1) + H^\top\varrho(Hx_2) + H^\top\varrho(H\hat{x}_1) - H^\top\varrho(H\hat{x}_2) \end{pmatrix}\rangle \\
&= (x_1 - x_2)^\top(H^\top\varrho(Hx_1) - H^\top\varrho(Hx_2)) + (\hat{x}_1 - x_1)^\top(H^\top\varrho(H\hat{x}_1) - H^\top\varrho(Hx_1)) \\
&+ (\hat{x}_2 - x_2)^\top(H^\top\varrho(H\hat{x}_2) - H^\top\varrho(Hx_2)) \geq 0
\end{aligned} \tag{52}$$

where the last inequality follows by the monotonicity of $\varrho(\cdot)$. Maximality follows by [38, Theorem 12.43] and the rank condition on H. ■

Theorem 7 *Let $\varrho(0) = 0$ and let the conditions of Lemmas 6 and 7 be satisfied. The feedback system $\dot{x}(t) \in (A - LC + BM)x(t) - BMe(t) + Ly(t) - G\varrho(Hx(t))$ has an asymptotically globally stable fixed point $x = 0$.*

Proof: From the SPRness conditions it follows that $A + BM$ is exponentially stable. Let $V(x) = x^T Px$, with $(A + BM)^T P + P(A + BM) = Q$, $Q = Q^T < 0$. Then

$$\begin{aligned}
\dot{V}(x(t)) &= -\tfrac{1}{2}x^T(t)Qx(t) - x^T(t)PBMe(t) - x^T(t)PG\varrho(Hx(t)) \\
&\leq -\tfrac{1}{2}x^T(t)Qx(t) + x^T(t)PBMe(t)
\end{aligned} \tag{53}$$

where the inequality $x^T(t)PG\varrho(Hx(t)) \geq 0$ is obtained under a rank assumption on H, which follows from the full column rank assumption of G. The exponential stability of the error dynamics guarantees the existence of a nonnegative bounded function $\alpha(\cdot)$, with $\alpha(t) \to 0$ exponentially fast as $t \to +\infty$, and such that $\| PBEe(t) \| \leq \alpha(t)$ ($\alpha(\cdot)$ may depend on $e(0)$ as a parameter). Thus we get

$$\dot{V}(x(t)) \leq \frac{1}{2}\lambda_{\min}(Q) \| x(t) \|^2 + \alpha(t) \| x(t) \| \tag{54}$$

It is not difficult to deduce from (47) that $x(\cdot)$ is bounded for any initial condition. Indeed (54) implies that $\dot{V}(x) < 0$ for all $x \in I\!R^n$ with $||x|| > \frac{-\alpha(t)}{\lambda_{\min}(Q)} > 0$. Using the result of [12] (in particular point C of their Theorem) we conclude that the equilibrium $x = 0$ is globally asymptotically stable. ■

As an example we may consider the complementarity system in (14) with $G = 0$, to which the above analysis applies. One sees that the conditions of Lemma 6 guarantee the well-posedness of the closed-loop system. Then the SPRness of $(A + BM, G, H)$ and the monotonicity in Lemma 7 are used to prove the stability of the stabilized system. According to the classification of [18], Theorem 7 solves an observer-controller problem with observer separation.

4.4 Further comments on the stabilization problem

The time-dependent multifunctions case may be split into two subcases: (i) when the multifunction does not depend on the input $u(\cdot)$, and (ii) when it depends explicitly on $u(\cdot)$. In the first case, the analysis of section 4.3 applies, provided the mappings $t \mapsto S(t)$ have suitable properties (like convexity for each t).

The latter case is encountered for instance in (14) when $G \neq 0$. Case (ii) is more difficult because the feedback $u = M\hat{x}$ modifies the set $\bar{S}$ in (34) in such a way that it is no longer identical to its counterpart in (35). Consequently the study of case (ii) departs significantly from what has been done above. Case (ii) is likely to belong to the no separation class. To illustrate this point, let us consider the complementarity system in (14), with $G \neq 0$.

The input $u = M\hat{x}$ for some constant matrix gain M, changes the dynamics of the observer in (35) and that of the system as well. Thus their closed-loop well-posedness has to be checked. However the feedback introduces a coupling between the two systems, which now have to be studied as a whole: it is no longer possible to suppose that the system is well-posed and then proceed with the observer well-posedness, since $\hat{x}$ intervenes in the system's dynamics. The next step is the stability of the error dynamics. Redoing the analysis of section 4.2.2 is not straighforward, because the sets in the normal cones in the right-hand-side of (37) no longer are the same. More precisely, inserting $u = M\hat{x}$ into (14) we obtain

$$\begin{cases} \dot{x}(t) = Ax(t) + EM\hat{x}(t) + B\lambda(t) \\ 0 \leq \lambda(t) \perp w(t) = Dx(t) + GM\hat{x}(t) + F \geq 0 \\ y(t) = Cx(t) \end{cases} \tag{55}$$

and the basic observer dynamics takes the form

$$\begin{cases} \dot{\hat{x}}(t) = (A + EM - LC)\hat{x}(t) - LCx(t) + B\lambda^{'}(t) \\ 0 \leq \lambda^{'}(t) \perp w(t) = (D + GM)\hat{x}(t) + F \geq 0 \end{cases} \tag{56}$$

If $\mathrm{Im}(M) \subseteq \mathrm{Ker}(G)$, then the analysis of section 4.3 may be redone. If not, one has to analyze the closed-loop dynamics (55)–(56) as a whole. The closed-loop system may be written as

$$\begin{cases} \dot{\bar{x}}(t) = T^{-1}\bar{A}T\bar{x}(t) + \bar{B}\bar{\lambda}(t) \\ 0 \leq \bar{\lambda}(t) \perp \bar{w}(t) = \bar{D}\bar{x}(t) + \bar{F} \geq 0 \end{cases} \tag{57}$$

with $\bar{A} = \begin{pmatrix} A + EM & EM \\ 0_n & A - LC \end{pmatrix}$, $\bar{B} = \mathrm{diag}(B, B)$, $\bar{D} = \begin{pmatrix} D & GM \\ 0_{m\times n} & D + GM \end{pmatrix}$ and $\bar{F} = \begin{pmatrix} F \\ F \end{pmatrix}$. We may rewrite (57) as follows

$$-\dot{\bar{x}}(t) + T^{-1}\bar{A}T\bar{x}(t) \in \bar{B}\ \partial\psi_K\left(\bar{D}\bar{x}(t) + \bar{F}\right) \tag{58}$$

with $K = (I\!R^+)^{2m}$. Let us state the following, without proof:

Theorem 8 *Consider the differential inclusion in (58). Let the triple $(T^{-1}\bar{A}T, \bar{B}, \bar{D})$ be SPR, and B have full column rank. Then the closed-loop system (55)–(56) is well-posed, and the origin $\bar{x} = 0$ is globally asymptotically stable.*

The proof is along the same lines as the proofs in section 4.3, and is not given for the sake of briefness. Notice that the SPR condition is equivalent to having $(\bar{A}, T^{-1}\bar{B}, \bar{D}T)$ being SPR, i.e. the following LMI has ot be satisfied for some matrices M and L (design feedback gains):

$$\begin{cases} \bar{P}\bar{A} + \bar{A}^T\bar{P} < 0 \\ \bar{P}T^{-1}\bar{B} = T^T\bar{D}^T \end{cases} \tag{59}$$

The conditions under which the LMI in (59) possesses solutions is not tackled here. Also it is noteworthy that the general problem when the set $S(t) = S(u(t))$ remains open.

5 The nonlinear case

We have seen that the observer design follows several steps: (i) the well-posedness of the system, (ii) the choice of an observer structure, (iii) the well-posedness of the observer, (iv) the stability of the error system, and finally

(v) the system's stabilization with the estimated state feedback. In this section we outline how this design problem may be tackled when the vector field is nonlinear. Let us consider the system

$$-\dot{x}(t) - f(x(t)) - g(x(t))u(\hat{x}(t), y(t), t) \in G(x(t))\varrho(H(x(t)), t) \tag{60}$$

and the observer structure

$$-\dot{\hat{x}}(t) - f(\hat{x}(t)) - g(\hat{x}(t))u(\hat{x}(t), y(t), t) + L[h(x(t)) - h(\hat{x}(t))] \in G(\hat{x}(t))\varrho(H(\hat{x}(t)), t) \tag{61}$$

where $\varrho(\cdot,\cdot)$ is some multivalued mapping. The error dynamics takes the form

$$\begin{aligned} -\dot{e}(t) - \hat{f}(x(t)) + \hat{f}(\hat{x}(t)) - [g(x(t)) - g(\hat{x}(t))]u(\hat{x}(t), t(t), t) \quad & \in G(x(t))\varrho(H(x(t)), t) \\ & -G(\hat{x}(t))\varrho(H(\hat{x}(t)), t) \end{aligned} \tag{62}$$

with $\hat{f}(x) = f(x) - Lh(x)$. Needless to say that the nonlinear case is in its full generality quite intractable. For instance the mapping $x \mapsto \nabla H(x)\varrho(H(x))$ is not monotone in general, despite $x \mapsto \varrho(x)$ is. Also the controller $u(\cdot)$ usually appears in the error dynamics, contrary to (27). This section only aims at showing how the nonlinear case may be tackled. Let us focus on a particular class of dissipative nonlinear complementarity systems, whose well-posedness is studied in [9]. Dissipativity will be helpful to achieve the above first three steps. The following class of complementarity systems is introduced formally

$$\begin{cases} \dot{x}(t) = a(x(t)) + B\lambda(t) + e(x(t), u(t)) \\ 0 \leq \lambda(t) \perp c(x(t)) + g(u(t)) \geq 0 \\ y(t) = d(x(t)) \end{cases} \tag{63}$$

where $x(t) \in I\!R^n$, $u(t) \in I\!R^p$, $\lambda(t) \in I\!R^m$, $y(t) \in I\!R^l$. Let $S(t) = \{z \in I\!R^n \mid c(h^{-1}(z)) + g(u(t)) \geq 0\}$. Let us state some properties:

- **H1** The mappings $a(\cdot)$, $e(\cdot,\cdot)$ and $g(\cdot)$ are locally Lipschtiz continuous, $a(0) = 0$, $g(0) = 0$, $e(\cdot, 0) = 0$;
- **H2** The system $\dot{x}(t) = a(x(t)) + B\lambda(t)$, $w(t) = c(x(t))$ is dissipative with respect to the supply rate $w^T\lambda$, and there exists a positive function $V(\cdot) \in C^3(I\!R^n; I\!R^+)$, $V(0) = 0$, $\frac{\partial^2 V}{\partial x^2}(x)$ is symmetric positive definite for all $x \in I\!R^n$, such that $c^T(x) = \frac{\partial V}{\partial x}^T(x)B$;
- **H3** There exists a state transformation $z = h(x)$ with $\frac{\partial h}{\partial x}(x) = \left(\frac{\partial^2 V}{\partial x^2}(x)\right)^{\frac{1}{2}} \triangleq \Lambda(x)$, and there exists a constant $\rho > 0$ such that for all $x \in I\!R^n$ one has $\rho B_{I\!R^m} \subset B^T\Lambda(x)(B_{I\!R^m}) + (I\!R^+)^m$, where $B_{I\!R^m}$ is the Euclidean closed unit ball in $I\!R^m$ centered at the origin.
- **H4** The Hessian $\frac{\partial^2 V}{\partial x^2}(x)$ is bounded on the convex hull co(Rge(S)) of Rge(S) $= \{z \in I\!R^n \mid \exists\, t \in I\!R^+$ with $z \in S(t)\}$.

Let us consider an output feedback $u = u(d(x))$ and study the conditions under which the closed-loop system satifies **H2**. From the KYP Lemma [8, Lemma 4.84] it follows that **H2** holds if and only if $\frac{\partial V}{\partial x}(x)[a(x) + e(x, u(d(x))] \leq 0$, $\frac{\partial V}{\partial x}(x)B = c^\top(x) + g^T(d(x))$, and $B^T\frac{\partial c^\top(x) + g^\top(d(x))}{\partial x} \geq 0$ is symmetric (> 0 if B has full column rank m). Then we have the following:

Lemma 8 *[9] Let $u(\cdot)$ be locally AC. Under assumptions* **H1–H3**, *the system in (63) can be rewritten as the differential inclusion*

$$\begin{cases} -\dot{z}(t) + \tilde{h}(z(t)) + \tilde{e}(z(t), u(t)) \in N(S(t); z(t)) \\ y(t) = d(h^{-1}(z(t))) \end{cases} \tag{64}$$

where $S(t) = \{z \mid c(h^{-1}(z)) + g(u(t)) \geq 0\}$, $N(S(t); z)$ *is the Fréchet normal cone to* $S(t)$ *at* z, *and* $\tilde{h}(z) = \frac{\partial h}{\partial x}^T(x)a(h^{-1}(z))$, $\tilde{e}(z, u(t)) = \frac{\partial h}{\partial x}^T(x)e(h^{-1}(z), u(t))$, $z = h(x)$.

In fact step (i) may also be seen as a suitable state space transformation which will allow us to design an observer structure. Performing a state transformation is common in observer design [20, 19, 42] (though it may also be applied on the error dynamics rather than on the system's dynamics [10]). We recall that $S(t)$ may be convex (for each t) while $z \mapsto c(h^{-1}(z))$ is not a convex function. But in general $S(t)$ may not be convex. So we shall rather assume that the functions $d(\cdot)$ and $h(\cdot)$ are such that $S(\cdot)$ satisfies **(A1)**. The formalism in (64) will be used to design an observer structure. Let us now provide a result on the well-posedness of (64).

- **H5** The mapping $z \mapsto \tilde{h}(z) + \tilde{e}(z, u(t))$ satisfies a linear growth condition $\| \tilde{h}(z) + \tilde{e}(z, u(t)) \| \leq k(t)(1 + \| z \|)$ for all $(t, z) \in I\!R^+ \times I\!R^n$ and some nonnegative function $k(\cdot) \in \mathcal{L}^1_{loc}([0, \infty), I\!R^n)$.

Theorem 9 *[9] Let* $z(0) \in S(0)$, *and* $u(\cdot)$ *be locally AC. Let assumptions* **H1**–**H4** *be satisfied. Then there exists a* $T > 0$ *such that the differential inclusion (64) has one and only one locally AC solution on* $[0, T)$. *If in addition assumption* **H5** *holds then* $T = +\infty$.

Let us now introduce an observer dynamics for the transformed system (64):

$$-\hat{z}(t) + \tilde{h}(\hat{z}(t)) + \tilde{e}(\hat{z}(t), u(t)) + L(y(t) - \hat{y}(t)) \in N(S(t); \hat{z}(t)) \tag{65}$$

where $\hat{y}(t) = d \circ h^{-1}(\hat{z})$ and $L \in I\!R^{n \times l}$. Supposing that the system (64) is well-posed (so in particular $y(t)$ is a locally AC function), the observer dynamics well-posedness may be shown by Theorem 9, with a slight modification of the functions $\tilde{h}(\cdot)$ and $\tilde{e}(\cdot, \cdot)$. Let us now study the error dynamics stability. Lyapunov stability implies that solutions are defined on $I\!R^+$. This may be assured by assumption **H5**, however there may exist cases where **H5** is not satisfied, yet solutions exist on $I\!R^+$. We shall therefore make the following, supposed to hold in the rest of this section:

Assumption 2 *The system's dynamics (64) and the observer dynamics (65) both possess unique locally AC solutions on* $I\!R^+$ *for all* $z(0) \in S(0)$ *and* $\hat{z}(0) \in S(0)$.

The error dynamics takes the following form ($e = z - \hat{z}$):

$$\begin{cases} -\dot{e}(t) + \tilde{h}(z(t)) - \tilde{h}(\hat{z}(t)) + \tilde{e}(z(t), u(t)) - \tilde{e}(\hat{z}(t), u(t)) + L(y(t) - \hat{y}(t)) = w(t) - \hat{w}(t) \\ w(t) \in N(S(t); z(t)), \ \hat{w}(t) \in N(S(t); \hat{z}(t)) \\ z(0) \in S(0), \ \hat{z}(0) \in S(0) \end{cases} \tag{66}$$

The choice of the observer dynamics in (65) as a copy of the observed system with a corrective term, is usual in the literature on nonlinear observers [19, 26, 10, 42, 20, 3, 35]. The study of the asymptotic stability of the error dynamics, then relies on various types of assumptions that are made on the observed system. Since our goal in this section is just to point out that the above theory may extend to the nonlinear case, we shall not construct an extensive theory (in particular one could consider a state dependent gain $L(\hat{x})$ instead of a constant gain matrix). Let us therefore make the following assumption, that is a (local) sector-like condition [26]:

Assumption 3 *There exist* $R > 0$, *bounded constants* α *and* β, *and matrices* A *and* C *such that*

$$\begin{cases} \| \tilde{h}(z) - \tilde{h}(\hat{z}) + \tilde{e}(z, u) - \tilde{e}(\hat{z}, u) - Ae \| \leq \alpha \| e \| \\ \| y - \hat{y} + Ce \| \leq \beta \| e \| \end{cases} \tag{67}$$

for all $z \in B(0, R)$, $\hat{z} \in B(0, R)$.

Clearly the first upperbound is a strong assumption on the dependence of $\tilde{e}(\cdot,\cdot)$ on u. Then we have the following:

Theorem 10 *Let assumption 3 hold. Suppose that there exists a matrix L such that $A - LC + (\alpha + \beta \parallel L \parallel +1)I_n$ is an asymptotically stable matrix. Suppose that the trajectories of the system and of the observer satisfy $\parallel -\dot{z}(t) + \tilde{h}(z(t)) + \tilde{e}(z(t), u(t)) \parallel < r$ and $\parallel -\dot{\hat{z}}(t) + \tilde{h}(\hat{z}(t)) + \tilde{e}(\hat{z}(t), u(t)) + L(y(t) - \hat{y}(t)) \parallel < r$ respectively. Then the error dynamics in (66) has a locally exponentially stable fixed point $e = 0$.*

Proof: First of all when $z = \hat{z}$ then from (66) we get $0 \in 0$ which shows that $e = 0$ is a fixed point of the error dynamics. Let $V(e) = \frac{1}{2}e^\top e$. Calculating the derivative of $V(e)$ along the error dynamics trajectories we get:

$$\begin{aligned}
\dot{V}(e) &= e^\top[\tilde{h}(z(t)) - \tilde{h}(\hat{z}(t)) + \tilde{e}(z(t), u(t)) - \tilde{e}(\hat{z}(t), u(t))] \\
&+ e^\top[L(y(t) - \hat{y}(t))] - e^\top(w(t) - \hat{w}(t)) \\
&= e^\top[\tilde{h}(z(t)) - \tilde{h}(\hat{z}(t)) + \tilde{e}(z(t), u(t)) - \tilde{e}(\hat{z}(t), u(t)) \pm Ae(t)] \\
&+ e^\top[L(y(t) - \hat{y}(t)) \pm LCe(t)] - e^\top(w(t) - \hat{w}(t)) \\
&\leq \alpha \parallel e(t) \parallel^2 + \beta \parallel L \parallel \parallel e(t) \parallel^2 + \parallel e(t) \parallel^2 + e^\top(t)(A - LC)e(t)
\end{aligned} \tag{68}$$

The result is a consequence of the last inequality. ■

We recall that r comes form property **(A1)**. This result relies on the assumption that there exists a control input such that the trajectories are "slow" (with a small enough derivative). If the sets $S(t)$ are convex for each t, and if the sector-like conditions (67) hold globally ($R = +\infty$), then one gets global stability.

6 Conclusions

In this paper we consider observer design for multivalued systems with maximal monotone multivalued mappings, and also with normal cones to convex or $r-$prox-regular sets. In contrast to the previous work on nonlinear observer design, the considered class of systems is nonsmooth set-valued and the standard theory does not apply. The existence and uniqueness of solutions is not a priori guaranteed and has to be carefully examined, as it has consequences on the type of set-valued system that may be observed. We propose two observer structures, together with a constructive design method. The approach taken in the paper is based on rendering the linear part of the observation error dynamics SPR, by choosing appropriate observer gains. Under the natural assumption that the observed system has a solution, and that the control input belongs to a certain admissible class, it is shown that there exists a unique solution for the estimated state, and that the observer recovers the state of the original system asymptotically. The results are applied to systems with time-invariant multivalued mappings, and systems with a class of time-varying multivalued mappings. In the latter case, the perturbed Moreau's sweeping process is used to analyse the system and the observer dynamics. Several open problems deserve future attention: the error dynamics stability and the stabilization with the observed state when the multifunction depends explicitly on the control input ($\varrho(x, u)$); the robustness of the observers when the time-varying multifunction model has uncertainties (jumps in the observer's state and in the system's state may not be simultaneous); more generally the observability properties of this class of set-valued systems with interesting dissipative properties; in the nonlinear case, derive new state space change that transform the original inclusions into suitable canonical representations. We also expect that this work paves the way to observer design for other classes of set-valued systems like evolution variational inequalities, projected systems, and possibly complementarity Lagrangian systems that can be embedded into second order Moreau's sweeping process.

A Appendix

The Haussdorf distance between two sets S and $S' \subset I\!R^n$ is haus$(S, S') = \max\{\sup_{z\in S} d(z, S'), \sup_{z\in S'} d(z, S)\}$, with $d(z, S) = \inf\{\parallel z - x \parallel, x \in S\}$.

Lemma 9 *[36, p.760] Let $S = \{x \mid Ax - b \in K, x \in C\}$, $S' = \{x \mid A'x - b' \in K, x \in C\}$, where C and K are nonempty closed convex sets, and $K = \{z \mid Dz \geq 0\}$. Then there exists a constant β depending on A and D such that haus$(S, S') \leq \beta \parallel D \parallel \parallel b - b' \parallel$.*

It is recalled here that the set S is supposed to be polyhedral, i.e. $S = \{x \in I\!R^n \mid Dx \geq 0\}$ for some matrix D.

Lemma 10 *Let $(H - KC)$ have rank l. The set $S'(t) = \{z \in I\!R^n \mid (H - KC)R^{-1}z \in S(t) \triangleq S - \{Ky(t)\}\}$ is locally AC (resp. locally BV) if the signal $y(\cdot)$ is locally AC (resp. locally BV).*

Proof: First we notice that the rank of $(H - KC)$ follows from the assumption that G is full column rank, see section 3. Now using the upperbound of the Hausdorff distance between two sets in Lemma 9, one can assert that there exists a constant β that depends only on S (i.e. on D) and on $(H - KC)R^{-1}$, such that

$$\begin{aligned} \text{haus}(S'(t), S'(\tau)) &\leq \beta \parallel Ky(t) - Ky(\tau) \parallel \\ &\leq \beta \parallel K \parallel \parallel y(t) - y(\tau) \parallel \end{aligned} \tag{69}$$

From this inequality it follows that if the function $y(\cdot)$ is locally AC (resp. locally BV), then the multivalued mapping $S'(\cdot)$ is locally AC (resp. locally BV).

The next lemma is a particular case of [38, Exercise 6.7] and of [25, Proposition 5.3.1], where the data are adapted to our case. It is presented here as a lemma for the sake of readability of the paper.

Lemma 11 *Let $\mathcal{H} : I\!R^n \to I\!R^l$ be a linear mapping $x \mapsto Hx$, $H \in I\!R^{l \times n}$. Let a $r-$prox-regular set $D \subset I\!R^l$ be given, and let $C = \mathcal{H}^{-1}(D) = \{x \in I\!R^n \mid Hx \in D\}$. Suppose that H has full row rank l and let $u = Hx$. Then*

$$N(C; x) = \{H^\top y \mid y \in N(D; u)\} = H^\top N(D, u) \tag{70}$$

where $N(C; x)$ is the Fréchet normal cone to C at x (if C is convex this is the normal cone of convex analysis).

Acknowledgement: The first author thanks Aris Daniilidis (Departament de Matematiques, Universitat Autonoma de Barcelona) for useful discussions on normal cones.

References

[1] V. Acary, B. Brogliato, and D. Goeleven. Higher order Moreau's sweeping process: mathematical formulation and numerical simulation. *Mathematical Programming Ser. A, in press*, 2007.

[2] K. Addi, S. Adly, B. Brogliato, and D. Goeleven. A method using the approach of Moreau and Panagiotopoulos for the mathematical formulation of non-regular circuits in electronics. *Nonlinear Analysis, Hybrid Systems, in press*, 2007.

[3] M. Arcak and P. Kokotović. Observer based control of systems with slope-restricted nonlinearities. *IEEE Transactions on Automatic Control*, 46(7):1146–1150, 2001.

[4] B. Brogliato. Some perspectives on the analysis and control of complementarity systems. *IEEE Transactions on Automatic Control*, 48:918 – 935, 2003.

[5] B. Brogliato. Absolute stability and the Lagrange-Dirichlet theorem with monotone multivalued mappings. *Systems and Control Letters*, 51:343–353, 2004.

[6] B. Brogliato, A. Daniilidis, C. Lemaréchal, and V. Acary. On the equivalence between complementarity systems, projected systems and differential inclusions. *Systems and Control Letters*, 55:45–51, 2006.

[7] B. Brogliato and D. Goeleven. The Krakovskii-LaSalle invariance principle for a class of unilateral dynamical systems. *Mathematics of Control, Signals and Systems*, 17:57–76, 2005.

[8] B. Brogliato, R. Lozano, B. Maschke, and O. Egeland. *Dissipative Systems Analysis and Control. Theory and Applications*. 2nd Ed., Communications and Control Engineering. Springer Verlag, London, 2007.

[9] B. Brogliato and L. Thibault. Well-posedness results for non-autonomous dissipative complementarity systems. *INRIA research report 5931, ISSN 0249-6399 (available at http://hal.inria.fr/docs/00/07/95/71/PDF/RR-5931.pdf)*, 2006.

[10] K.K. Busawon and M. Saif. A state observer for nonlinear systems. *IEEE Transactions on Automatic Control*, 44:2098–2103, 1999.

[11] M.K. Camlibel, J.S. Pang, and J. Shen. Conewise linear systems: non-zenoness and observability. *SIAM J. Control Optimizaton*, 45:1769–1800, 2006.

[12] M.J. Corless and G. Leitmann. Continuous state feedback guaranteeing uniform ultimate boundedness for uncertain dynamic systems. *IEEE Transactions on Automatic Control*, 26:1139–1144, 1981.

[13] K. Deimling. *Multivalued Differential Equations*. De Gruyter Series in Nonlinear Analysis and Applications, Berlin, 1992.

[14] A. Dontchev and F. Lempio. Difference methods for differential inclusions. *SIAM review*, 34(2):263–294, 1992.

[15] J.F. Edmond and L. Thibault. Relaxation of an optimal control problem involving a perturbed sweeping process. *Mathematical Programming Ser. B*, 104:347 – 373, 2005.

[16] J.F. Edmond and L. Thibault. BV solutions of nonconvex sweeping process differential inclusion with perturbation. *Journal of Differential Equations*, 226:135 – 179, 2006.

[17] A.F. Filippov. *Differential Equations with Discontinuous Righthand Sides*. Mathematics and its Applications. Kluwer, Dordrecht, The Netherlands, 1988.

[18] R. Freeman. Global internal stabilizability does not imply global external stabilizability for small sensor disturbances. *IEEE Transactions on Automatic Control*, 40:2119 – 2122, 1995.

[19] J.P. Gauthier, H. Hammouri, and S. Othman. A simple observer for nonlinear systems, applications to bioreactors. *IEEE Transactions on Automatic Control*, 37:875–880, 1992.

[20] J.P. Gauthier and I. Kupka. Observability and observers for nonlinear systems. *SIAM J. Control and Optimization*, 32:975–994, 1994.

[21] C. Glocker. *Set-Valued Force Laws*. Lecture Notes in Applied Mechanics 1. Springer Verlag, Heidelberg, 2001.

[22] D. Goeleven and B. Brogliato. Stability and instability matrices for linear evolution variational inequalities. *IEEE Transactions on Automatic Control*, 49:521– 534, 2004.

[23] D. Goeleven, D. Motreanu, Y. Dumont, and M. Rochdi. *Variational and Hemivariational Inequalities: Theory, Methods and Applications. Volume I: Unilateral Analysis and Unilateral Mechanics*. Nonconvex Optimization and its Applications. Kluwer Academic Publishers, Boston/Dordrecht/London, 2003.

[24] W.P.M.H Heemels, J.H.M. Schumacher, and S. Weiland. Linear complementarity systems. *SIAM Journal on Applied Mathematics*, 60:1234–1269, 2000.

[25] J.B. Hiriart-Urruty and C. Lemaréchal. *Fundamentals of Convex Analysis*. Grundlehren text Editions. Springer Verlag, Berlin Heidelberg., 2001.

[26] C.S. Jeong, E.E. Yaz, A. Bahakeem, and Y.I. Yaz. Nonlinear observer design with general criteria. *Int. Journal of Innovative, Computing, Information and Control*, 4:693 – 704, 2006.

[27] K.H. Johansson, A. Rantzer, and K.J. Astrom. Fast switches in relay feedback systems. *Automatica*, 35:539–552, 1999.

[28] M. Johansson and A. Rantzer. Computation of piecewise quadratic Lyapunov functions for hybrid systems. *IEEE Transactions on Automatic Control*, 43(4):555–559, 1998.

[29] A. Juloski, W.P.M.H. Heemels, and B. Brogliato. Observer design for lur'e systems with monotonic multi-valued mappings. *Preprints of the 16th IFAC World Congress, Prague*, 2005.

[30] M. Kunze and M. Monteiro Marques. An introduction to Moreau's sweeping process. *in Impacts in Mechanical Systems, Lecture Notes in Physics 551, Springer Verlag, B. Brogliato (Ed.)*, pages 1–60, 2000.

[31] M.D.P. Monteiro Marques. *Differential Inclusions in Nonsmooth Mechanical Problems. Shocks and Dry Friction*. Progress in Nonlinear Differential Equations and Their Applications 9. Birkhauser, Basel, 1993.

[32] J.J. Moreau. Evolution problem associated with a moving convex set in a hilbert space. *Journal of Differential Equations*, 26:347–374, 1977.

[33] M. Osorio and J.A. Moreno. Dissipative design of observers for multivalued nonlinear systems. *Proceedings of the IEEE Conference on Decision and Control*, pages 5400–5405, 2006.

[34] R.A. Poliquin, R.T. Rockafellar, and L. Thibault. Local differentiability of distance functions. *Transactions of the American Mathematical Society*, 352:5231–5249, 2000.

[35] R. Rajamani. Observers for Lipschitz nonlinear systems. *IEEE Transactions on Automatic Control*, 43:397–401, 1998.

[36] S.M. Robinson. Stability theory for systems of inequalities. part I: Linear systems. *SIAM J. Numerical Analysis*, 12:754 – 769, 1975.

[37] R.T. Rockafellar. *Convex Analysis*. Princeton University Press, Princeton, New Jersey, 1970.

[38] R.T. Rockafellar and R.J.B. Wets. *Variational Analysis*. Springer, Berlin, 1998.

[39] A. J. van der Schaft and J. M. Schumacher. The complementary-slackness class of hybrid systems. *Mathematics of Control, Signals and Systems*, 9:266–301, 1996.

[40] G.V. Smirnov. *Introduction to the Theory of Differential Inclusions*. Graduate Studies in Mathematics vol.41. American Mathematical Society, Providence, Rhode Island, 2002.

[41] E. D. Sontag. Nonlinear regulation: The piecewise linear approach. *IEEE Transactions on Automatic Control*, 26(2):346–358, April 1981.

[42] A.J. van der Schaft. On nonlinear observers. *IEEE Transactions on Automatic Control*, 30:1254–1256, 1985.

[43] M. Vidyasagar. *Nonlinear Systems Analysis*. Prentice Hall, Engelwood Cliffs, New Jersey, 1993.

[44] J.T. Wen. Time domain and frequency domain conditions for strict positive realness. *IEEE Transactions on Automatic Control*, 33(10):988–992, 1988.

[45] Y. A. Yakubovich. The matrix inequality method in the theory of the stability of nonlinear control systems, part I,II,III, translation from russian. *Avtomatika i Telemekhanika*, 25,26, 1964,1965.

Contents

1 Introduction **3**

2 Preliminaries **4**
2.1 Notation and definitions . . . 4
2.2 Monotone differential inclusions . . . 5
2.3 Perturbed sweeping process and measure differential inclusions . . . 6

3 Problem statement (linear case) **7**
3.1 Time-invariant multifunction . . . 8
3.2 Time-varying multifunction . . . 9
3.3 Observers structure . . . 10

4 Main results (linear case) **11**
4.1 Time-invariant multifunction . . . 11
4.1.1 Observers well-posedness . . . 11
4.1.2 Stability of the error dynamics . . . 13
4.2 Time-varying multifunctions . . . 14
4.2.1 Observer well-posedness . . . 15
4.2.2 Stability of the error dynamics . . . 16
4.3 Stabilization with the observed state . . . 17
4.4 Further comments on the stabilization problem . . . 19

5 The nonlinear case **20**

6 Conclusions **23**

A Appendix **23**

Unité de recherche INRIA Rhône-Alpes
655, avenue de l'Europe - 38334 Montbonnot Saint-Ismier (France)

Unité de recherche INRIA Futurs : Parc Club Orsay Université - ZAC des Vignes
4, rue Jacques Monod - 91893 ORSAY Cedex (France)
Unité de recherche INRIA Lorraine : LORIA, Technopôle de Nancy-Brabois - Campus scientifique
615, rue du Jardin Botanique - BP 101 - 54602 Villers-lès-Nancy Cedex (France)
Unité de recherche INRIA Rennes : IRISA, Campus universitaire de Beaulieu - 35042 Rennes Cedex (France)
Unité de recherche INRIA Rocquencourt : Domaine de Voluceau - Rocquencourt - BP 105 - 78153 Le Chesnay Cedex (France)
Unité de recherche INRIA Sophia Antipolis : 2004, route des Lucioles - BP 93 - 06902 Sophia Antipolis Cedex (France)

Éditeur
INRIA - Domaine de Voluceau - Rocquencourt, BP 105 - 78153 Le Chesnay Cedex (France)
http://www.inria.fr
ISSN 0249-6399