HAL open science

A qualitative mathematical analysis of a class of variational inequalities via semi-complementarity problems. Applications in electronics

Khalid Addi, Bernard Brogliato, Daniel Goeleven

▶ To cite this version:

Khalid Addi, Bernard Brogliato, Daniel Goeleven. A qualitative mathematical analysis of a class of variational inequalities via semi-complementarity problems. Applications in electronics. [Research Report] RR-5990, INRIA. 2006. inria-00103328v2

HAL Id: inria-00103328
https://inria.hal.science/inria-00103328v2

Submitted on 4 Oct 2006

HAL is a multi-disciplinary open access archive for the deposit and dissemination of scientific research documents, whether they are published or not. The documents may come from teaching and research institutions in France or abroad, or from public or private research centers.

L'archive ouverte pluridisciplinaire **HAL**, est destinée au dépôt et à la diffusion de documents scientifiques de niveau recherche, publiés ou non, émanant des établissements d'enseignement et de recherche français ou étrangers, des laboratoires publics ou privés.

INSTITUT NATIONAL DE RECHERCHE EN INFORMATIQUE ET EN AUTOMATIQUE

A qualitative mathematical analysis of a class of variational inequalities via semi-complementarity problems. Applications in electronics

Khalid Addi — Bernard Brogliato — Daniel Goeleven

N° 5990

October 2006

Thème ?

Rapport de recherche

ISSN 0249-6399 ISRN INRIA/RR--5990--FR+ENG

A qualitative mathematical analysis of a class of variational inequalities via semi-complementarity problems. Applications in electronics

Khalid Addi *, Bernard Brogliato †, Daniel Goeleven ‡

Thème ? —
Projet Bipop

Rapport de recherche n° 5990 —October 2006 — 53 pages

Abstract: The main object of this paper is to present a general mathematical theory applicable to the study of a large class of variational inequalities arising in electronics.

Key-words: Variational inequalities, Complementarity problems, Recession functions, Recession cones, Set-valued ampere-volt characteristics in electronics.

* IREMIA, Université de La Réunion, Saint-Denis, 97400, France, addi@univ-reunion.fr
† INRIA Rhône-Alpes, ZIRST Montbonnot, 655 avenue de l'Europe, 38334 Saint-Ismier, France, Bernard.Brogliato@inrialpes.fr
‡ IREMIA, Université de La Réunion, Saint-Denis, 97400, France, goeleven@univ-reunion.f

Unité de recherche INRIA Rhône-Alpes
655, avenue de l'Europe, 38334 Montbonnot Saint Ismier (France)
Téléphone : +33 4 76 61 52 00 —Télécopie +33 4 76 61 52 52

Analyse qualitative d'une classe d'inégalités variartionnelles par des problèmes de semi-complémentarité. Applications en électronique.

Résumé : Dans cet article nous proposons une théorie mathématique applicable à l'étude d'une large classe d'inégalités variationnelles apparaissant en électronique.

Mots-clés : Inegalités variationnelles, problèmes de complémentarité, fonctions de récéssion, cônes de récession, caractéristiques courant-tension en électronique.

1 Introduction

The first major contribution of this paper is to propose a new mathematical approach that can be used to derive conditions for the existence and uniqueness of a general class of variational inequalities of the form: Find $u \in \mathbb{R}^n$ such that

$$\langle Mu + q, v - u\rangle + \Phi(v) - \Phi(u) \geq 0, \ \forall v \in \mathbb{R}^n \tag{1}$$

where $M \in \mathbb{R}^{n\times n}$ is a real matrix, $q \in \mathbb{R}^n$ a vector and $\Phi : \mathbb{R}^n \to \mathbb{R}\cup\{+\infty\}$ a proper convex and lower semicontinuous function.

In this paper, we first develop a topological approach using Brouwer degree theory that has been introcuded in [29] for the case $\Phi \equiv \Psi_K$ where Ψ_K denotes the indicator function of some nonempty closed convex set K. This approach reduces the study of problem (1) to the one of some semi-complementarity problems like:

$$\begin{cases} z \in D(\Phi)_\infty \\ Mz \in (D(\Phi_\infty))^* \\ \langle Mz, z\rangle \leq 0, \end{cases} \tag{2}$$

where $D(\Phi)_\infty$ is the recession cone of the domain of Φ and $(D(\Phi_\infty))^*$ is the dual cone of the domain of the recession function Φ_∞ of Φ.

Then we show that this approach can be used to state conditions for the existence and uniqueness of solutions of Problem (1) for various important classes of matrices M and functions Φ. In particular, we show that fundamental results known in complementarity theory and concerning several classes of matrices like positive definite matrices, P-matrices, weakly positive definite matrices, positive stable matrices, diagonally stable matrices, positive semidefinite matrices, P_0-matrices, weakly positive semidefinite matrices, positive semi-stable matrices, copositive matrices and diagonally semi-stable matrices can be generalized to problem (1). Recession tools play a major role in this approach.

Then we present how our theory for problem (1) can be used to derive conditions for the existence and uniqueness of solutions of the generalized equation

$$Ax + Du \in B\partial\Xi(Cx) \tag{3}$$

where $A \in \mathbb{R}^{n\times n}, B \in \mathbb{R}^{n\times m}, C \in \mathbb{R}^{m\times n}$ and $D \in \mathbb{R}^{n\times p}$ are matrices, $u \in \mathbb{R}^p$ is a vector, $\Xi : \mathbb{R}^m \to \mathbb{R}\cup\{+\infty\}$ is a proper convex and lower semicontinuous function and ∂ denotes the subdifferential operator of convex analysis.

The second major contribution of this paper consists to show that the mathematical model in (3) and consequently in (1) can be used to develop a suitable methodology for the formulation and mathematical analysis of circuits in electronics involving devices like diodes and operational amplifiers.

As shown through several examples of classical static electrical circuits like clipping circuits, slicers, sampling gates, operational amplifiers, four-diode bridge full-wave rectifiers, such generalized equations are mandatory studying to characterize the well-posedness of the circuits (u may be a time-varying input signal $t \mapsto u(t)$) as well as to compute some defined output signal. We show also that the results which are presented in this paper can be useful for the determination of the equilibrium points of dynamical circuits, a topic of major importance for further dynamical analysis and control applications.

2 Mathematical Tools

The aim of this Section is to recall some notions and fundamental results in convex analysis which will be used throughout this paper.

For $x, y \in \mathbb{R}^n$, the notation $\langle x, y\rangle = \sum_{i=1}^n x_i y_i$ is used to denote the euclidean scalar product on $\mathbb{R}^n$ and $\|x\| = \sqrt{\langle x, x\rangle}$ to denote the corresponding norm. The identity mapping on $\mathbb{R}^n$ will be denoted by $id_{\mathbb{R}^n}$ while the

identity matrix of order n is denoted by I. We will also denote by $\{e^1, ..., e^n\}$ the canonical basis of $\mathbb{R}^n$.

• **[Convex subdifferential]** Let $\Gamma_0(\mathbb{R}^n; \mathbb{R} \cup \{+\infty\})$ be the set of proper, convex and lower semicontinuous functions from $\mathbb{R}^n$ to $\mathbb{R} \cup \{+\infty\}$. Let $\Phi \in \Gamma_0(\mathbb{R}^n; \mathbb{R} \cup \{+\infty\})$ be given. The convex subdifferential $\partial\Phi(x)$ (see e.g. [30], [45]) of Φ at x is defined by:

$$\partial\Phi(x) = \{w \in \mathbb{R}^n : \Phi(v) - \Phi(x) \geq \langle w, v - x\rangle, \forall v \in \mathbb{R}^n\}.$$

The set $\partial\Phi(x)$ describes the differential properties of Φ by means of the supporting hyperplanes to the epigraph of Φ at $(x, \Phi(x))$.

• **[Fenchel transform]** Let $\Phi \in \Gamma_0(\mathbb{R}^n; \mathbb{R} \cup \{+\infty\})$ be given. We denote by $D(\Phi)$ the domain of Φ, i.e.

$$D(\Phi) = \{x \in \mathbb{R}^n : \Phi(x) < +\infty\}.$$

The Fenchel transform Φ^* of Φ is the function defined by:

$$\Phi^*(z) = \sup_{x \in D(\Phi)} \{\langle x, z\rangle - \Phi(x)\}, \ (z \in \mathbb{R}^n).$$

The function $\Phi^* : \mathbb{R}^n \to \mathbb{R} \cup \{+\infty\}$ is proper convex and lower semicontinuous. A well known result in convex analysis (see e.g. [30], [45]) ensures that:

$$z \in \partial\Phi(x) \Longleftrightarrow x \in \partial\Phi^*(z) \Longleftrightarrow \Phi(x) + \Phi^*(z) = \langle x, z\rangle.$$

• **[Closed convex set]** Let $K \subset \mathbb{R}^n$ be a nonempty closed convex set. We denote by Ψ_K the indicator function of K, that is:

$$\Psi_K(x) := \begin{cases} 0 \ \text{ if } \quad x \in K \\ \\ +\infty \ \text{ if } \ x \notin K \end{cases}, \quad (x \in \mathbb{R}^n). \tag{4}$$

Then

$$\partial\Psi_K(x) = \begin{cases} \{w \in \mathbb{R}^n : \langle w, v - x\rangle \leq 0, \forall v \in K\} \ \text{ if } \ x \in K \\ \\ \qquad \emptyset \qquad\qquad\qquad\qquad\qquad \text{if } x \notin K \end{cases}$$

and

$$\Psi_K^*(z) = \sup_{x \in K} \langle x, z\rangle, \quad (z \in \mathbb{R}^n).$$

The dual cone of K is the nonempty closed convex cone K^* defined by

$$K^* := \{w \in \mathbb{R}^n : \langle w, v\rangle \geq 0, \ \forall v \in K\}. \tag{5}$$

• **[Recession function]** Let x_0 be any element in $D(\Phi)$. The recession function of Φ is defined by

$$\Phi_\infty(x) = \lim_{\lambda \to +\infty} \frac{1}{\lambda}\Phi(x_0 + \lambda x) \ \ (x \in \mathbb{R}^n).$$

The function $\Phi_\infty : \mathbb{R}^n \to \mathbb{R} \cup \{+\infty\}$ is a proper convex and lower semicontinuous function which describes the asymptotic behavior of Φ.

• **[Recession cone]** Let x_0 be some arbitrary element of K. The recession cone of K is defined by

$$K_\infty = \bigcap_{\lambda > 0} \frac{1}{\lambda}(K - x_0).$$

The set K_∞ is a nonempty closed convex cone that is described in terms of the directions which recede from K.

Let us here recall some important properties of the recession function and recession cone (see Section 1.4 in [27]):

Proposition 1 *a) Let $\Phi : \mathbb{R}^n \to \mathbb{R} \cup \{+\infty\}$ be a proper convex and lower semicontinuous function. Then*

$$\Phi_\infty(\alpha x) = \alpha \Phi_\infty(x),\ (\alpha \geq 0,\ x \in \mathbb{R}^n), \tag{6}$$

$$\Phi_\infty(x) = \liminf_{t \to +\infty, v \to x} \frac{\Phi(tv)}{t},\ (x \in \mathbb{R}^n), \tag{7}$$

$$(x \in D(\Phi), e \in \mathbb{R}^n) \implies \Phi_\infty(e) \geq \Phi(x+e) - \Phi(x). \tag{8}$$

b) Let $\Phi_1 : \mathbb{R}^n \to \mathbb{R} \cup \{+\infty\}$ and $\Phi_2 : \mathbb{R}^n \to \mathbb{R} \cup \{+\infty\}$ be two proper, convex and lower semicontinuous functions. Then

$$(\Phi_1 + \Phi_2)_\infty(x) \geq (\Phi_1)_\infty(x) + (\Phi_2)_\infty(x),\ (x \in \mathbb{R}^n). \tag{9}$$

c) Let $K \subset \mathbb{R}^n$ be a nonempty, closed and convex set. Then

$$(\Psi_K)_\infty(x) = \Psi_{K_\infty}(x),\ \ (x \in \mathbb{R}^n), \tag{10}$$

$$(x \in K,\ e \in K_\infty) \implies x + e \in K. \tag{11}$$

d) Let $K \subset \mathbb{R}^n$ be a nonempty closed and convex cone. Then

$$K_\infty = K. \tag{12}$$

e) Let $K \subset \mathbb{R}^n$ be a nonempty compact and convex set. Then

$$K_\infty = \{0\}. \tag{13}$$

• **[Proximation operator]** Let $\Phi \in \Gamma_0(\mathbb{R}^n; \mathbb{R} \cup \{+\infty\})$ be given. It is known that for each $y \in \mathbb{R}^n$, there exists a unique $x \in \mathbb{R}^n$ such that

$$\langle x - y, v - x \rangle + \Phi(v) - \Phi(x) \geq 0,\ \forall v \in \mathbb{R}^n,$$

that is

$$y \in x + \partial\Phi(x).$$

The mapping $P_\Phi : \mathbb{R}^n \to \mathbb{R}^n; y \mapsto P_\Phi(y)$, called the proximation operator (see e.g. [43]), and defined by

$$P_\Phi(y) = (id_{\mathbb{R}^n} + \partial\Phi)^{-1}(y),\ (y \in \mathbb{R}^n) \tag{14}$$

is thus a well-defined singled-valued operator. Moreover, it is easy to check that:

$$y \in x + \partial\Phi(x) \Longleftrightarrow x = (id_{\mathbb{R}^n} + \partial\Phi)^{-1}(y) \Longleftrightarrow x = \ \mathrm{argmin}_{v \in \mathbb{R}^n}\{\frac{1}{2}||v - y||^2 + \Phi(v)\}.$$

If K is a nonempty closed convex set, then

$$P_{\Psi_K} \equiv P_K$$

where P_K denotes the projector from $\mathbb{R}^n$ onto K, i.e.

$$P_K(x) = \ \mathrm{argmin}_{v \in K}\{\frac{1}{2}||v - x||^2\}.$$

• **[Brouwer topological degree]** Let $D \subset \mathbb{R}^n$ be an open and bounded set. If $f : \bar{D} \to \mathbb{R}^n$ is continuous and $0 \notin f(\partial D)$ then the Brouwer topological degree of f with respect to D and 0 is well-defined (see e.g. [35]) and denoted by $\deg(f, D, 0)$.

Let us here recall some properties of the topological degree we will use later in this paper.

P1. Solution property: If $0 \notin f(\partial D)$ and $\deg(f, D, 0) \neq 0$ then there exists $x \in D$ such that $f(x) = 0$.

P2. Homotopy invariance property: Let $\varphi : [0, 1] \times \bar{D} \to \mathbb{R}^n; (\lambda, x) \mapsto \varphi(\lambda, x)$, be continuous such that, for each $\lambda \in [0, 1]$, one has $0 \notin \varphi(\lambda, \partial D)$. Then the map $\lambda \mapsto \deg(\varphi(\lambda, .), D, 0)$ is constant on $[0, 1]$.

P3. Normalized property: If $p \in D$ then $\deg(id_{\mathbb{R}^n} - p, D, 0) = 1$.

3 A Class of Variational Inequalities

Let $\Phi : \mathbb{R}^n \to \mathbb{R} \cup \{+\infty\}$ be a proper, convex and lower semicontinuous function with closed domain, i.e.

$$\overline{D(\Phi)} = D(\Phi). \tag{15}$$

Let $M \in \mathbb{R}^{n\times n}$ be a given matrix and $q \in \mathbb{R}^n$ a given vector. We consider the variational inequality problem:

$\mathbf{VI}(\mathbf{M}, \mathbf{q}, \mathbf{\Phi})$: Find $u \in \mathbb{R}^n$ such that:

$$\langle Mu + q, v - u\rangle + \Phi(v) - \Phi(u) \geq 0, \ \forall v \in \mathbb{R}^n. \tag{16}$$

The solution set of problem $\mathbf{VI}(\mathbf{M}, \mathbf{q}, \mathbf{\Phi})$ will be denoted by $SOL(M, q, \Phi)$ and the resolvant set by $\mathcal{R}(M, \Phi)$, that are:

$$SOL(M, q, \Phi) := \{u \in \mathbb{R}^n : u \text{ solution of } (16)\}$$

and

$$\mathcal{R}(M, \Phi) := \{q \in \mathbb{R}^n : SOL(M, q, \Phi) \neq \emptyset\}.$$

Remark 1 *i) The variational inequality in (16) is equivalent to the differential inclusion:*

$$Mu + q \in -\partial\Phi(u) \tag{17}$$

and $\mathcal{R}(M, \Phi)$ is nothing else that the range of the set-valued mapping $x \rightrightarrows -Mx - \partial\Phi(x)$, i.e.

$$\mathcal{R}(M, \Phi) = \cup_{x\in\mathbb{R}^n}\{-Mx - \partial\Phi(x)\}.$$

ii) If a solution of (16) exists, let us say u^*, then: $\langle Mu^* + q, e\rangle + \Phi(u^* + e) - \Phi(u^*) \geq 0, \ \forall e \in \mathbb{R}^n$ and then using (8), we get: $\langle Mu^* + q, e\rangle + \Phi_\infty(e) \geq 0, \ \forall e \in \mathbb{R}^n$. It results that necessarily:

$$\langle q, e\rangle + \Phi_\infty(e) \geq 0, \ \forall e \in \ker\{M^T\}. \tag{18}$$

iii) Condition (15) is not really necessary to develop our approach but it is assumed in order to simplify its presentation.

3.1 Special classes of matrices M and functions Φ

In the study of Problem $\mathbf{VI}(\mathbf{M}, \mathbf{q}, \mathbf{\Phi})$, the following definitions of various special matrices M and functions Φ will be used.

• We denote by $\Gamma(\mathbb{R}^n;\mathbb{R}\cup\{+\infty\})$ the set of proper convex and lower semicontinuous functions $\Phi:\mathbb{R}^n\to\mathbb{R}\cup\{+\infty\}$ with closed domain, i.e.:

$$\Gamma(\mathbb{R}^n;\mathbb{R}\cup\{+\infty\}):=\{\Phi\in\Gamma_0(\mathbb{R}^n;\mathbb{R}\cup\{+\infty\}):D(\Phi)=\overline{D(\Phi)}\}.$$

• We denote by $D\Gamma(\mathbb{R}^n;\mathbb{R}\cup\{+\infty\})$ the set of functions $\Phi:\mathbb{R}^n\to\mathbb{R}\cup\{+\infty\}$ with the "diagonal" structure:

$$\Phi(x)=\Phi_1(x_1)+\Phi_2(x_2)+...+\Phi_n(x_n),\ \forall x\in\mathbb{R}^n, \tag{19}$$

where, for all $1\le i\le n$, we have

$$\Phi_i\in\Gamma(\mathbb{R}^n;\mathbb{R}\cup\{+\infty\}) \tag{20}$$

and

$$\Phi_i(\lambda x)=\lambda\Phi_i(x),\ \forall\lambda\ge 0,\ \forall x\in\mathbb{R}^n. \tag{21}$$

It is clear that

$$D\Gamma(\mathbb{R}^n;\mathbb{R}\cup\{+\infty\})\subset\Gamma(\mathbb{R}^n;\mathbb{R}\cup\{+\infty\})\subset\Gamma_0(\mathbb{R}^n;\mathbb{R}\cup\{+\infty\}).$$

• We define by $\mathbf{B_n}$ the set of $(M,\Phi)\in\mathbb{R}^{n\times n}\times\Gamma(\mathbb{R}^n;\mathbb{R}\cup\{+\infty\})$ such that $D(\Phi)$ is bounded.

• We define by $\mathbf{PD_n}$ the set of $(M,\Phi)\in\mathbb{R}^{n\times n}\times\Gamma(\mathbb{R}^n;\mathbb{R}\cup\{+\infty\})$ such that

$$\langle Mx,x\rangle>0,\ \forall x\in D(\Phi)_\infty, x\neq 0. \tag{22}$$

• We define by $\mathbf{PD0_n}$ the set of $(M,\Phi)\in\mathbb{R}^{n\times n}\times\Gamma(\mathbb{R}^n;\mathbb{R}\cup\{+\infty\})$ such that

$$\langle Mx,x\rangle\ge 0,\ \forall x\in D(\Phi)_\infty. \tag{23}$$

• We define by $\mathbf{P_n}$ the set of $(M,\Phi)\in\mathbb{R}^{n\times n}\times\Gamma(\mathbb{R}^n;\mathbb{R}\cup\{+\infty\})$ such that

$$x\in D(\Phi)_\infty\implies\langle x,e^j\rangle e^j\in D(\Phi_\infty)\ (1\le j\le n), \tag{24}$$

and

$$(x\in D(\Phi)_\infty, x\neq 0)\implies\exists\alpha\in\{1,...,n\}:x_\alpha(Mx)_\alpha>0. \tag{25}$$

• We define by $\mathbf{P0_n}$ the set of $(M,\Phi)\in\mathbb{R}^{n\times n}\times\Gamma(\mathbb{R}^n;\mathbb{R}\cup\{+\infty\})$ such that

$$x\in D(\Phi)_\infty\implies\langle x,e^j\rangle e^j\in D(\Phi_\infty)\ (1\le j\le n), \tag{26}$$

and

$$(x\in D(\Phi)_\infty, x\neq 0)\implies\exists\alpha\in\{1,...,n\}:x_\alpha\neq 0\text{ and }x_\alpha(Mx)_\alpha\ge 0. \tag{27}$$

Remark 2 *i) Note that both $D(\Phi)_\infty$ and $D(\Phi_\infty)$ are used in (24) and (26).*

ii) Condition (24) (or (26)) means that if $w\in D(\Phi)_\infty$ then its projection $\langle w,e^j\rangle e^j=w_je^j$ onto the space

$$X_j:=\{x\in\mathbb{R}^n:x_k=0,\forall k\in\{1,...,n\},k\neq j\}$$

belongs to $D(\Phi_\infty)$.

iii) If $\Phi\equiv\Psi_K$ with $K=\mathbb{R}^n$, $\mathbb{R}^{n-\alpha}\times(\mathbb{R}_+)^\alpha$ $(\alpha\in\{1,...,n\})$ or $(\mathbb{R}_+)^n$ then condition (24) (or (26)) holds.

Let $\sigma(M) \subset \mathbb{C}$ be the set of eigenvalues of M.

• We define by $\mathbf{PS_n}$ the set of $(M, \Phi) \in \mathbb{R}^{n\times n} \times \Gamma(\mathbb{R}^n; \mathbb{R} \cup \{+\infty\})$ such that

$$D(\Phi_\infty) = \mathbb{R}^n, \tag{28}$$

and

$$\sigma(M) \cap \mathbb{R} \subset]0, +\infty[. \tag{29}$$

• We define by $\mathbf{PS0_n}$ the set of $(M, \Phi) \in \mathbb{R}^{n\times n} \times \Gamma(\mathbb{R}^n; \mathbb{R} \cup \{+\infty\})$ such that

$$D(\Phi_\infty) = \mathbb{R}^n, \tag{30}$$

and

$$\sigma(M) \cap \mathbb{R} \subset \mathbb{R}_+ . \tag{31}$$

Remark 3 *Condition (29) (resp. (31)) means that any real eigenvalue of M is positive (resp. nonnegative).*

• We define by $\mathbf{Q_n}$ the set of $(M, \Phi) \in \mathbb{R}^{n\times n} \times \Gamma(\mathbb{R}^n; \mathbb{R} \cup \{+\infty\})$ such that

$$\mathcal{R}(M, \Phi) = \mathbb{R}^n,$$

i.e. for each $q \in \mathbb{R}^n$, problem $\mathbf{VI}(\mathbf{M}, \mathbf{q}, \mathbf{\Phi})$ has at least one solution.

• We define by $\mathbf{Q0_n}$ the set of $(M, \Phi) \in \mathbb{R}^{n\times n} \times \Gamma(\mathbb{R}^n; \mathbb{R} \cup \{+\infty\})$ such that there exists $\lambda_0 > 0$ so that

$$\mathcal{R}(\lambda I + M, \Phi) = \mathbb{R}^n, \ \forall\, 0 < \lambda \leq \lambda_0,$$

i.e. for any $0 < \lambda \leq \lambda_0$, and for each $q \in \mathbb{R}^n$, problem $\mathbf{VI}(\lambda\mathbf{I} + \mathbf{M}, \mathbf{q}, \mathbf{\Phi})$ has at least one solution.

It is clear that

$$\mathbf{PD_n} \subset \mathbf{PD0_n}, \ \ \mathbf{P_n} \subset \mathbf{P0_n}, \ \ \mathbf{PS_n} \subset \mathbf{PS0_n}.$$

Subset-superset relationships cannot be expected as illustrated by the following simple examples.

Example 1 *Let us consider the matrices*

$$M_1 = \begin{pmatrix} -1 & 0 \\ 0 & 0 \end{pmatrix}, \quad M_2 = \begin{pmatrix} 2 & -1 \\ -1 & 2 \end{pmatrix}, \ M_3 = \begin{pmatrix} 1 & 1 \\ -4 & 1 \end{pmatrix}, \ M_4 = \begin{pmatrix} 1 & 1 \\ -4 & -1 \end{pmatrix}$$

and the functions:

$$\Phi_1 \equiv \Psi_{[0,1]\times[0,1]}, \ \ \Phi_2 \equiv \Psi_{\{x\in(\mathbb{R}_+)^2:\, x_2 \geq x_1 - 1\}}, \ \ \Phi_3 \equiv \Psi_{[1,+\infty[\times[1,+\infty[},$$
$$\Phi_4(x) = \mid x_1 \mid + \mid x_2 \mid \ \ (\forall x \in \mathbb{R}^2), \ \ \Phi_5 \equiv \Psi_{\mathbb{R}_+ \times \mathbb{R}_+}.$$

It is easy to see that $(M_1, \Phi_1) \in \mathbf{B_2}$ and $(M_1, \Phi_1) \notin \big(\mathbf{PD0_2} \cup \mathbf{P0_2} \cup \mathbf{PS0_2}\big)$, $(M_2, \Phi_2) \in \mathbf{PD_2}$ and $(M_2, \Phi_2) \notin \big(\mathbf{B_2} \cup \mathbf{P0_2} \cup \mathbf{PS0_2}\big)$, $(M_3, \Phi_3) \in \mathbf{P_2}$ and $(M_3, \Phi_3) \notin \big(\mathbf{B_2} \cup \mathbf{PD0_2} \cup \mathbf{PS0_2}\big)$. We see also that $(M_4, \Phi_4) \in \mathbf{PS_2}$ and $(M_4, \Phi_4) \notin \big(\mathbf{B_2} \cup \mathbf{PD0_2} \cup \mathbf{P0_2}\big)$.

Remark 4 *The class of matrices satisfying condition (22) recovers the class of positive definite matrices, the class of matrices satisfying condition (25) recovers the class of P-matrices and the class of matrices satisfying condition (29) recovers the class of weakly positive definite matrices and consequently the class of positive stable matrices. The class of matrices satisfying condition (23) recovers the class of positive semidefinite matrices, the class of matrices satisfying condition (27) recovers the class of P_0-matrices and the class of matrices satisfying condition (31) recovers the class of weakly positive semidefinite matrices and consequently the class of positive semi-stable matrices. The concepts introduced above can thus be used to recover and unify several situations involving matrices for which there is no subset-superset relationship.*

3.2 The asymptotic continuation principle

• Recalling that $D(\Phi)$ is nonempty, convex and assumed to be closed, the set $D(\Phi)_\infty$ is then a well-defined nonempty closed and convex cone. Let us now consider the semi-complementarity problem:

$\mathbf{SCP}_\infty(\mathbf{M}, \mathbf{\Phi})$:

$$\begin{cases} z \in D(\Phi)_\infty \\ Mz \in D(\Phi_\infty)^* \\ \langle Mz, z\rangle \leq 0. \end{cases} \tag{32}$$

Recall that $D(\Phi_\infty)^*$ denotes the dual cone of $D(\Phi_\infty)$ and the second relation in (32) reads also:

$$\langle Mz, h\rangle \geq 0,\ \forall h \in D(\Phi_\infty).$$

Note that the first relation in (32) involves the recession cone of the domain of Φ while the second relation in (32) invokes the dual cone of the domain of Φ_∞ and not the dual cone of the recession cone of the domain of Φ.

Let us now first remark that if $D(\Phi)_\infty = D(\Phi_\infty)$ then problem $\mathbf{SCP}_\infty(\mathbf{M}, \mathbf{\Phi})$ reduces to a classical complementarity problem.

Proposition 2 *Let $\Phi : \mathbb{R}^n \to \mathbb{R}$ be a proper convex and lower semicontinuous function with closed domain and let $M \in \mathbb{R}^{n\times n}$ be a given matrix. If $D(\Phi)_\infty = D(\Phi_\infty)$ then $z \in \mathbb{R}^n$ is a solution of problem $\mathbf{SCP}_\infty(\mathbf{M}, \mathbf{\Phi})$ if and only if z is a solution of the complementarity problem $\mathbf{CP}(\mathbf{M}, \mathbf{D}(\mathbf{\Phi})_\infty)$:*

$$\begin{cases} z \in D(\Phi)_\infty \\ Mz \in (D(\Phi)_\infty)^* \\ \langle Mz, z\rangle = 0. \end{cases} \tag{33}$$

Proof: Let z be a solution of problem $\mathbf{SCP}_\infty(\mathbf{M}, \mathbf{\Phi})$. Then the second relation in (32) reads here

$$\langle Mz, h\rangle \geq 0, \forall h \in D(\Phi)_\infty$$

from which we deduce in particular that $\langle Mz, z\rangle \geq 0$. This together with the third relation in (32) ensures that $\langle Mz, z\rangle = 0$.

If z is a solution of problem $\mathbf{CP}(\mathbf{M}, \mathbf{D}(\mathbf{\Phi})_\infty)$ then clearly z is a solution of problem $\mathbf{SCP}_\infty(\mathbf{M}, \mathbf{\Phi})$ too. □

Remark 5 *Let $\Phi : \mathbb{R}^n \to \mathbb{R}$ be a proper convex and lower semicontinuous function with closed domain.*

i) The following inclusion holds:

$$D(\Phi_\infty) \subset D(\Phi)_\infty. \tag{34}$$

Indeed, let $e \in D(\Phi_\infty)$ be given. Then, for some $x_0 \in D(\Phi)$, we have

$$\Phi_\infty(e) = \lim_{\lambda\to+\infty} \frac{1}{\lambda}\Phi(x_0 + \lambda e) = c < +\infty.$$

Then, remarking that

$$\lim_{\lambda\to+\infty} \frac{1}{\lambda}\Phi(x_0 + \lambda e) = \lim_{\lambda\to+\infty} \frac{1}{\lambda}(\Phi(x_0 + \lambda e) - \Phi(x_0)) = \sup_{\lambda>0} \frac{1}{\lambda}(\Phi(x_0 + \lambda e) - \Phi(x_0)),$$

we see that $\Phi(x_0+\lambda e) \leq c\lambda + \Phi(x_0),\ \forall \lambda > 0$, *so that* $x_0+\lambda e \in D(\Phi),\ \forall \lambda > 0$, *and thus* $e \in \frac{1}{\lambda}(D(\Phi) - x_0),\ \forall \lambda > 0$, *so that* $e \in D(\Phi)_\infty$.

ii) If $\Phi \equiv \Psi_K$ *where* $K \subset \mathbb{R}^n$ *is a nonempty closed convex set, then using (10), we see that*

$$D((\Psi_K)_\infty) = D(\Psi_{K_\infty}) = K_\infty = D(\Psi_K)_\infty.$$

In this case, problem $\mathbf{SCP}_\infty(\mathbf{M}, \mathbf{\Psi_K})$ *reduces to the complementarity problem:*

$$\begin{cases} z \in K_\infty \\ Mz \in (K_\infty)^* \\ \langle Mz, z\rangle = 0. \end{cases} \tag{35}$$

iii) Let $\Phi : \mathbb{R} \to \mathbb{R}$ *be the function defined by*

$$\Phi(x) = x^2,\ \forall x \in \mathbb{R}\,.$$

Then $\Phi_\infty \equiv \Psi_{\{0\}}$, $D(\Phi_\infty) = \{0\}$, $D(\Phi)_\infty = \mathbb{R}$ *and the inclusion in (34) is strict.*

• Let us now denote by $\mathcal{B}(M, \Phi)$ the solutions set of problem $\mathbf{SCP}_\infty(\mathbf{M}, \mathbf{\Phi})$. Remark that problem $\mathbf{SCP}_\infty(\mathbf{M}, \mathbf{\Phi})$ has at least one (trivial) solution since $0 \in \mathcal{B}(M, \Phi)$.

Let us also set:

$$\mathcal{K}(M, \Phi) = \{x \in \mathbb{R}^n : Mx \in D(\Phi_\infty)^*\}, \tag{36}$$

$$\mathcal{N}_0(M) = \{x \in \mathbb{R}^n : \langle Mx, x\rangle = 0\}, \tag{37}$$

$$\mathcal{N}_-(M) = \{x \in \mathbb{R}^n : \langle Mx, x\rangle \leq 0\}, \tag{38}$$

$$\mathcal{N}_+(M) = \{x \in \mathbb{R}^n : \langle Mx, x\rangle \geq 0\}. \tag{39}$$

Proposition 3 *Let* $\Phi : \mathbb{R}^n \to \mathbb{R}$ *be a proper convex and lower semicontinuous function and let* $M \in \mathbb{R}^{n\times n}$ *be a given matrix. If* u_1 *and* u_2 *denote two solutions of problem* $\mathbf{VI}(\mathbf{M}, \mathbf{\Phi}, \mathbf{q})$ *then*

$$u_1 - u_2 \in \mathcal{N}_-(M).$$

Proof: If u_1 and u_2 denote two solutions of $\mathbf{VI}(\mathbf{M}, \mathbf{q}, \mathbf{\Phi})$ then $\langle Mu_1 + q, u_2 - u_1\rangle + \Phi(u_2) - \Phi(u_1) \geq 0$ and $\langle Mu_2 + q, u_1 - u_2\rangle + \Phi(u_1) - \Phi(u_2) \geq 0$ from which we deduce that $\langle M(u_1 - u_2), u_1 - u_2\rangle \leq 0$. □

The structure of the set $\mathcal{B}(M, \Phi)$ can be specified in several situations that are described in the following proposition.

Proposition 4 *Let* $\Phi : \mathbb{R}^n \to \mathbb{R}$ *be a proper convex and lower semicontinuous function with closed domain and let* $M \in \mathbb{R}^{n\times n}$ *be a given matrix.*

a) We have $\mathcal{B}(M, \Phi) = D(\Phi)_\infty \cap \mathcal{N}_-(M) \cap \mathcal{K}(M, \Phi)$. *b) If* $D(\Phi_\infty) = D(\Phi)_\infty$ *then* $\mathcal{B}(M, \Phi) = D(\Phi)_\infty \cap \mathcal{N}_0(M) \cap \mathcal{K}(M, \Phi)$. *c) If* $D(\Phi_\infty) = \mathbb{R}^n$ *then* $\mathcal{B}(M, \Phi) = \ker\{M\}$. *d) If* $D(\Phi_\infty) = \mathbb{R}^n$ *and* M *is invertible then* $\mathcal{B}(M, \Phi) = \{0\}$. *e) If* $(M, \Phi) \in \mathbf{B}_n$ *then* $\mathcal{B}(M, \Phi) = \{0\}$. *f) If* $(M, \Phi) \in \mathbf{PD0}_n \cup \mathbf{P0}_n$ *then* $\mathcal{B}(M, \Phi) = D(\Phi)_\infty \cap \mathcal{N}_0(M) \cap \mathcal{K}(M, \Phi)$. *g) If* $(M, \Phi) \in \mathbf{PS0}_n$ *then* $\mathcal{B}(M, \Phi) = \ker\{M\}$.

Proof: a) Part a) is a direct consequence of the definition of the set $\mathcal{B}(M,\Phi)$. b) Part b) is a direct consequence of Proposition 2. c) Here $D(\Phi_\infty)^* = \{0\}$ and $\mathcal{K}(M,\Phi) = \ker\{M\} \subset \mathcal{N}_-(M)$ so that $\mathcal{B}(M,\Phi) = \ker\{M\}$. d) Part d) is a direct consequence of part c). e) If $(M,\Phi) \in \mathbf{B_n}$ then $D(\Phi)$ is bounded and thus $D(\Phi)_\infty = \{0\}$. f) If $(M,\Phi) \in \mathbf{PD0_n}$ then $\langle Mx, x\rangle \geq 0, \forall x \in D(\Phi)_\infty$ and thus $D(\Phi)_\infty \cap \mathcal{N}_-(M) = D(\Phi)_\infty \cap \mathcal{N}_0(M)$. Let $(M,\Phi) \in \mathbf{P0_n}$ be given. Let $w \in \mathcal{B}(M,\Phi)$ be given. It suffices to check that $\langle Mw, w\rangle = 0$. We know that: $\langle Mw, h\rangle \geq 0, \forall h \in D(\Phi_\infty)$. Let $j \in \{1,...,n\}$ be given. We may set $h = \langle w, e^j\rangle e^j$ to get $(Mw)_j w_j \geq 0$. This last relation holds for all $j \in \{1,...,n\}$ and since $0 \geq \langle w, Mw\rangle = \sum_{j=1}^n (Mw)_j w_j$ we obtain finally that $\langle Mw, w\rangle = 0$. g) Part g) is a direct consequence of part c). □

Definition 1 *We define by* $\mathbf{AC}_n$ *the set of* $(M,\Phi) \in \mathbb{R}^{n\times n} \times \Gamma(\mathbb{R}^n; \mathbb{R}\cup\{+\infty\})$ *such that*

$$\forall t \in [0,1] \ : \ \mathcal{B}((1-t)I + tM, \Phi) = \{0\}.$$

In other words, we say that the couple (M,Φ) is of class $\mathbf{AC_n}$ provided that, for all $t \in [0,1]$, 0 is the unique solution of problem $\mathbf{SCP}_\infty((\mathbf{1-t})\mathbf{I} + \mathbf{tM}, \mathbf{\Phi})$.

This concept that may appear technical can in fact be used to recover various important situations. This is shown in the following proposition.

Proposition 5 *We have:*

$$\mathbf{B_n} \cup \mathbf{PD_n} \cup \mathbf{P_n} \cup \mathbf{PS_n} \subset \mathbf{AC_n}.$$

Proof: a) We prove that $\mathbf{B_n} \subset \mathbf{AC_n}$. Here $D(\Phi)$ is assumed bounded and thus $D(\Phi)_\infty = \{0\}$. If $t \in [0,1]$ and $z \in \mathcal{B}((1-t)I + tM, \Phi)$ then $z \in D(\Phi)_\infty$ and the result follows.

b) We prove that $\mathbf{PD_n} \subset \mathbf{AC_n}$. Let $(M,\Phi) \in \mathbf{PD_n}$, $t \in [0,1]$ and $z \in \mathcal{B}((1-t)I + tM, \Phi)$ be given. Then $z \in D(\Phi)_\infty$ and

$$\langle (1-t)z + tMz, z\rangle \leq 0.$$

If $t = 1$ then $\langle Mz, z\rangle \leq 0$ and (22) yields $z = 0$. If $0 \leq t < 1$ then

$$||z||^2 \leq -\frac{t}{1-t}\langle Mz, z\rangle$$

and from (22), we deduce that necessarily $z = 0$. The result follows.

c) We prove that $\mathbf{P_n} \subset \mathbf{AC_n}$. Let $(M,\Phi) \in \mathbf{P_n}$, $t \in [0,1]$ and $z \in \mathcal{B}((1-t)I + tM, \Phi)$ be given. We assert that $z = 0$. Suppose on the contrary that $z \neq 0$. We claim that there exists some index $k \in \{1,...,n\}$ such that

$$(1-t)z_k^2 + t(Mz)_k z_k > 0.$$

Indeed, if $0 < t \leq 1$ the result follows from (25) since $z \in D(\Phi)_\infty, z \neq 0$ while if $t = 0$, the result is trivial since $z \neq 0$. We know that

$$\langle (1-t)z + tMz, h\rangle \geq 0, \forall h \in D(\Phi_\infty).$$

Let $j \in \{1,...,n\}$ be given. Using (25), we may set $h = \langle z, e^j\rangle e^j$ to get

$$(1-t)z_j^2 + t(Mz)_j z_j \geq 0.$$

This last relation holds for all $j \in \{1,...,n\}$ and since

$$\langle (1-t)z + tMz, z\rangle \leq 0,$$

we get the contradiction:

$$0 \geq (1-t)z_k^2 + t(Mz)_k z_k + \sum_{j \neq k} (1-t)z_j^2 + t(Mz)_j z_j > 0.$$

d) We prove that $\mathbf{PS_n} \subset \mathbf{AC_n}$. Let $(M, \Phi) \in \mathbf{PS_n}$, $t \in [0,1]$ and $z \in \mathcal{B}((1-t)I + tM, \Phi)$ be given. We claim that $z = 0$. Suppose on the contrary that $z \neq 0$. Here $D(\Phi_\infty)^* = \{0\}$ and the second relation in (32) yields

$$(1-t)z + tMz = 0.$$

If $t = 0$ then $z = 0$ and a contradiction. If $0 < t \leq 1$ then

$$Mz = -\frac{(1-t)}{t} z$$

so that $\nu^* := -\frac{(1-t)}{t} \leq 0$ is a real eigenvalue of M and a contradiction to (29). □

Let us now give some additional properties that will be used later.

Proposition 6 *Let $\Phi : \mathbb{R}^n \to \mathbb{R}$ be a proper convex and lower semicontinuous function with closed domain and let $M \in \mathbb{R}^{n \times n}$ be a given matrix. If*

$$(M, \Phi) \in \mathbf{PD0_n} \cup \mathbf{P0_n} \cup \mathbf{PS0_n}$$

then

$$\forall \lambda > 0, \quad (\lambda I + M, \Phi) \in \mathbf{AC_n}.$$

Proof: Let $\lambda > 0$ be given.

a) If $(M, \Phi) \in \mathbf{PD0_n}$ then condition (23) on M entails that $\lambda I + M$ satisfies condition (22) and the result is a consequence of Proposition 5.

b) If $(M, \Phi) \in \mathbf{P0_n}$ then condition (27) on M entails that for each $x \in D(\Phi)_\infty$, $x \neq 0$, there exists $\alpha \in \{1, ..., n\}$ such that:

$$x_\alpha(\lambda x + Mx)_\alpha = \lambda x_\alpha^2 + x_\alpha(Mx)_\alpha > 0$$

and thus $\lambda I + M$ satisfies condition (25) and the result follows from Proposition 5.

b) Let $(M, \Phi) \in \mathbf{PS0_n}$ be given. Let $t \in [0,1]$ and $z \in \mathcal{B}((1-t)I + tM, \Phi)$ be given. We claim that $z = 0$. Suppose on the contrary that $z \neq 0$. Here from (28) we deduce that $D(\Phi_\infty)^* = \{0\}$ and the second relation in (32) yields

$$(1-t)z + tMz + t\lambda z = 0.$$

If $t = 0$ then $z = 0$ and a contradiction. If $0 < t \leq 1$ then

$$Mz = -\frac{(1-t)}{t} z - \lambda z$$

so that $\nu^* := -\frac{(1-t)}{t} - \lambda < 0$ is a real eigenvalue of M and a contradiction to (31). □

The following Theorem is the basic result of this Section. It reduces the study of the general class of variational inequalities $\mathbf{VI(M, q, \Phi)}$ to semi-complementarity problems $\mathbf{SCP_\infty(tM + (1-t)I, \Phi)}$ ($t \in [0,1]$) involving the convex combinations of the matrix M and the identity matrix I. More precisely, we prove that if the couple $(M, \Phi) \in \mathbf{AC}_n$ then for each $q \in \mathbb{R}^n$, problem $\mathbf{VI(M, q, \Phi)}$ has at least one solution. In other words we prove that

$$\mathbf{AC_n} \subset \mathbf{Q_n}.$$

Theorem 1 *(Asymptotic continuation principle) If*

$$(M, \Phi) \in \mathbf{AC_n}$$

then, for each $q \in \mathbb{R}^n$, problem $\mathbf{VI}(\mathbf{M}, \mathbf{q}, \mathbf{\Phi})$ has at least one solution.

Proof: Let $q \in \mathbb{R}^n$ be given. From (14) and (17), Problem $\mathbf{VI}(\mathbf{M}, \mathbf{q}, \mathbf{\Phi})$ is equivalent to the fixed point problem:

$$u = P_\Phi(u - (Mu + q)).$$

Let us now define by $H : [0, 1] \times \mathbb{R}^n \to \mathbb{R}^n$ the continuous homotopy denoted as

$$H(t, u) = P_\Phi(tu - t(Mu + q)) = P_\Phi(u - \big(t(Mu + q) + (1 - t)u\big)).$$

We claim that there exists $R_0 > 0$ such that for all $R \geq R_0$ and for all $t \in [0, 1]$,

$$H(t, u) \neq u, \ \forall u \in \mathbb{R}^n, ||u|| = R. \tag{40}$$

Indeed, if we suppose the contrary then we may find sequences $\{t_i\}_{i\in\mathbb{N}} \subset [0, 1]$ and $\{u_i\}_{i\in\mathbb{N}} \subset \mathbb{R}^n$ satisfying $||u_i|| \to +\infty$ and $u_i = H(t_i, u_i)$. Then

$$\langle t_i(Mu_i + q) + (1 - t_i)u_i, v - u_i\rangle + \Phi(v) - \Phi(u_i) \geq 0, \forall v \in \mathbb{R}^n. \tag{41}$$

It is clear from (41) that

$$u_i \in D(\Phi) \ (i \in \mathbb{N}).$$

Moreover, for i large enough, $||u_i|| \neq 0$ and we may set:

$$z_i := \frac{u_i}{||u_i||}.$$

There exists subsequences, again denoted by $\{t_i\}$ and $\{z_i\}$, such that $\lim_{i\to+\infty} t_i = t \in [0, 1]$ and $\lim_{i\to+\infty} z_i = z$ with $||z|| = 1$.

Let $x_0 \in D(\Phi)$ be any element in the domain of Φ. Let $\lambda > 0$ be given. For i large enough, $\frac{\lambda}{||u_i||} < 1$ and thus

$$\frac{\lambda}{||u_i||}u_i + (1 - \frac{\lambda}{||u_i||})x_0 \in D(\Phi)$$

since the set $D(\Phi)$ is convex.

Recalling that the set $D(\Phi)$ is assumed to be closed and taking the limit as $i \to +\infty$, we get $\lambda z + x_0 \in D(\Phi)$. This result holds for any $\lambda > 0$ and thus

$$z \in \bigcap_{\lambda>0} \frac{1}{\lambda}(D(\Phi) - x_0) = D(\Phi)_\infty. \tag{42}$$

Let $e \in D(\Phi_\infty)$ be given. Then from (34), $e \in D(\Phi)_\infty$ and from (11), $u_i + e \in D(\Phi)$. We may thus set $v = u_i + e$ in (41) to get

$$\langle (1 - t_i)u_i + t_i(Mu_i + q), e\rangle + \Phi(u_i + e) - \Phi(u_i) \geq 0$$

and thus using (8), we obtain

$$\langle (1 - t_i)u_i, e\rangle + \langle t_i(Mu_i + q), e\rangle + \Phi_\infty(e) \geq 0.$$

Note that $\Phi_\infty(e) < +\infty$ since $e \in D(\Phi_\infty)$ and we may therefore divide this last relation by $||u_i||$ to get:

$$\langle (1 - t_i)z_i, e\rangle + \langle t_i Mz_i + t_i \frac{q}{||u_i||}, e\rangle + \frac{1}{||u_i||}\Phi_\infty(e) \geq 0.$$

Taking the limit as $i \to +\infty$, we get $\langle (1-t)z + tMz, e\rangle \geq 0$. This holds for any $e \in D(\Phi_\infty)$ and thus

$$(1-t)z + tMz \in D(\Phi_\infty)^*. \tag{43}$$

Setting now $v = x_0$ in (41), we obtain:

$$(1-t_i)||u_i||^2 + t_i\langle Mu_i, u_i\rangle \leq \langle (1-t_i)u_i, x_0\rangle + \langle t_i Mu_i, x_0\rangle + \langle t_i q, x_0 - u_i\rangle + \Phi(x_0) - \Phi(u_i). \tag{44}$$

The function Φ is proper, convex and lower semicontinuous, and thus (see e.g. Theorem 1.1.11 in [27]) there exists $a \geq 0$ and $b \in \mathbb{R}$ such that:

$$\Phi(x) \geq -a||x|| + b, \ \forall x \in \mathbb{R}^n.$$

Thus

$$(1-t_i)||u_i||^2 + t_i\langle Mu_i, u_i\rangle \leq a||u_i|| - b + \langle (1-t_i)u_i, x_0\rangle + \langle t_i Mu_i, x_0\rangle + \langle t_i q, x_0 - u_i\rangle + \Phi(x_0).$$

Dividing this last relation by $||u_i||^2$, we get:

$$(1-t_i)||z_i||^2 + t_i\langle Mz_i, z_i\rangle \leq \frac{a}{||u_i||} - \frac{b}{||u_i||^2} + \langle t_i Mz_i, \frac{x_0}{||u_i||}\rangle +$$

$$+(1-t_i)\langle z_i, \frac{x_0}{||u_i||}\rangle + \langle t_i \frac{q}{||u_i||}, \frac{x_0}{||u_i||} - z_i\rangle + \frac{\Phi(x_0)}{||u_i||^2}.$$

Taking the limit as $i \to +\infty$, we get

$$\langle (1-t)z + tMz, z\rangle \leq 0.$$

This last relation together with (42) and (43) imply that $z \in \mathcal{B}((1-t)I + tM, \Phi)$. Moreover $z \neq 0$ and we obtain a contradiction to our assumption requiring that (M, Φ) is AC well-posed.

Thus, for $R \geq R_0$, (40) holds and the Brouwer degree with respect to the set $D_R := \{x \in \mathbb{R}^n : ||x|| < R\}$ and 0 of the map $u \mapsto u - H(t, u)$ is well-defined for all $t \in [0, 1]$. Set $R_1 := P_\Phi(0)$ and let $R > \max\{R_0, R_1\}$ be given. Using the homotopy invariance property as well as the normalized property of Brouwer degree, we obtain:

$$\deg(id_{\mathbb{R}^n} - P_\Phi(id_{\mathbb{R}^n} - (M. + q), D_R, 0) = \deg(id_{\mathbb{R}^n} - H(1, .), D_R, 0)$$

$$= \deg(id_{\mathbb{R}^n} - H(0, .), D_R, 0) = \deg(id_{\mathbb{R}^n} - P_\Phi(0), D_R, 0) = 1.$$

It results from solution property of Brouwer degree that $SOL(M, q, \Phi) \neq \emptyset$ and the result follows. □

3.3 Positivity and solvability conditions

Using Theorem 1 together with Proposition 5 we obtain

$$\mathbf{B_n} \cup \mathbf{PD_n} \cup \mathbf{P_n} \cup \mathbf{PS_n} \subset \mathbf{AC_n} \subset \mathbf{Q_n}$$

and we get the following result ensuring that for each $q \in \mathbb{R}^n$, problem $\mathbf{VI(M, q, \Phi)}$ has at least one solution:

Corollary 1 *If*

$$(M, \Phi) \in \mathbf{B_n} \cup \mathbf{PD_n} \cup \mathbf{P_n} \cup \mathbf{PS_n}$$

then

$$\mathcal{R}(M, \Phi) = \mathbb{R}^n.$$

Each matrix discussed in Corollary 1 presents some "positivity property" and is nonsingular on $D(\Phi)_\infty$ in the sense that:

$$D(\Phi)_\infty \cap \ker\{M\} = \{0\}.$$

3.4 Nonnegativity and solvability conditions

Let $\Phi : \mathbb{R}^n \to \mathbb{R} \cup \{+\infty\}$ be a proper, convex and lower semicontinuous function with closed domain and let $M \in \mathbb{R}^{n\times n}$ be a matrix. In this Section, we will assume that $(M, \Phi) \in \mathbf{Q0_n}$.

Theorem 2 *If* $(M, \Phi) \in \mathbf{Q0_n}$ *and* $\mathcal{B}(M, \Phi) = \{0\}$ *then*

$$\mathcal{R}(M, \Phi) = \mathbb{R}^n.$$

Proof: Here there exists $\lambda_0 > 0$ such that:

$$\mathcal{R}(\lambda I + M, \Phi) = \mathbb{R}^n, \ \forall\, 0 < \lambda \leq \lambda_0. \tag{45}$$

It results that for all $i \in \mathbb{N}, i \geq \frac{1}{\lambda_0}$, there exists $u_i \in \mathbb{R}^n$ such that

$$\langle (\frac{1}{i} I + M)u_i + q, v - u_i\rangle + \Phi(v) - \Phi(u_i) \geq 0, \ \forall v \in \mathbb{R}^n. \tag{46}$$

We claim that the sequence $\{u_i\} \equiv \{u_i; i \in \mathbb{N}\backslash\{0\}\}$ is bounded. Suppose on the contrary that $||u_i|| \to +\infty$ as $i \to +\infty$. Then, for i large enough, $||u_i|| \neq 0$ and we may set $z_i := \frac{u_i}{||u_i||}$. There exists a subsequence, again denoted by $\{z_i\}$, such that $\lim_{i\to+\infty} z_i = z$ with $||z|| = 1$.

It is clear from (46) that

$$u_i \in D(\Phi) \ (i \in \mathbb{N}, n \neq 0).$$

Let $x_0 \in D(\Phi)$ be any element in the domain of Φ. Let $\lambda > 0$ be given. For i large enough, $\frac{\lambda}{||u_i||} < 1$ and thus

$$\frac{\lambda}{||u_i||} u_i + (1 - \frac{\lambda}{||u_i||}) x_0 \in D(\Phi)$$

since $D(\Phi)$ is convex and $x_0 \in D(\Phi)$. Taking the limit as $i \to +\infty$, we get $\lambda z + x_0 \in D(\Phi)$ since $D(\Phi)$ is assumed to be closed. This result holds for any $\lambda > 0$ and thus

$$z \in \bigcap_{\lambda>0} \frac{1}{\lambda}(D(\Phi) - x_0) = D(\Phi)_\infty. \tag{47}$$

Let $e \in D(\Phi_\infty)$ be given. Then $e \in D(\Phi)_\infty$ and from (11), $u_i + e \in D(\Phi)$. We may set $v = u_i + e$ in (46) to get

$$\langle (\frac{1}{i} I + M)u_i + q, e\rangle + \Phi(u_i + e) - \Phi(u_i) \geq 0$$

and thus using (8), we obtain

$$\langle \frac{1}{i} u_i, e\rangle + \langle M u_i + q, e\rangle + \Phi_\infty(e) \geq 0.$$

Remarking that $\Phi_\infty(e) < +\infty$ since $e \in D(\Phi_\infty)$, we may divide this last relation by $||u_i||$ to get:

$$\langle \frac{1}{i} z_i, e\rangle + \langle M z_i + \frac{q}{||u_i||}, e\rangle + \frac{1}{||u_i||}\Phi_\infty(e) \geq 0.$$

Taking the limit as $i \to +\infty$, we get $\langle M z, e\rangle \geq 0$. This holds for any $e \in D(\Phi_\infty)$ and thus

$$z \in \mathcal{K}(M, \Phi). \tag{48}$$

Setting now $v = x_0$ in (46), we obtain:

$$\frac{1}{i}||u_i||^2 + \langle M u_i, u_i\rangle \leq \langle (\frac{1}{i} I + M)u_i, x_0\rangle + \langle q, x_0 - u_i\rangle + \Phi(x_0) - \Phi(u_i). \tag{49}$$

The function Φ is proper, convex and lower semicontinuous, and thus (see e.g. Theorem 1.1.11 in [27]) there exists $a \geq 0$ and $b \in \mathbb{R}$ such that:

$$\Phi(x) \geq -a||x|| + b, \ \forall x \in \mathbb{R}^n.$$

Thus

$$\langle Mu_i, u_i \rangle \leq a||u_i|| - b + \langle (\frac{1}{i}I + M)u_i, x_0 \rangle + \langle q, x_0 - u_i \rangle + \Phi(x_0).$$

Dividing this last relation by $||u_i||^2$, we get:

$$\langle Mz_i, z_i \rangle \leq \frac{a}{||u_i||} - \frac{b}{||u_i||^2} + \langle (\frac{1}{i}I + M)z_i, \frac{x_0}{||u_i||} \rangle + \langle \frac{q}{||u_i||}, \frac{x_0}{||u_i||} - z_i \rangle + \frac{\Phi(x_0)}{||u_i||^2}.$$

Taking the limit as $i \to +\infty$, we get $\langle Mz, z \rangle \leq 0$. Thus

$$z \in \mathcal{N}_-(M). \tag{50}$$

Using (47), (48) and (50) we obtain that

$$z \in \mathcal{B}(M, \Phi).$$

Finally, we get a contradiction since we have proved that $z \neq 0$ and $z \in \mathcal{B}(M, \Phi)$.

The sequence $\{u_i\}$ is thus bounded and there exists a subsequence, again denoted $\{u_i\}$ which converges. Let us set

$$u = \lim_{i \to +\infty} u_i.$$

Let $v \in \mathbb{R}^n$ be fixed. We have:

$$\langle (\frac{1}{i}I + M)u_i + q, u_i - v \rangle - \Phi(v) + \Phi(u_i) \leq 0.$$

Taking the limit inferior as $i \to +\infty$, and using the lower semicontinuity of Φ, we obtain:

$$\langle Mu + q, u - v \rangle - \Phi(v) + \Phi(u) \leq 0. \tag{51}$$

The vector v has been chosen arbitrarily in $\mathbb{R}^n$ and thus the result in (51) holds for all $v \in \mathbb{R}^n$. The existence result follows. □

From Theorem 1 and Proposition 6, we have

$$\mathbf{PD0_n} \cup \mathbf{P0_n} \cup \mathbf{PS0_n} \subset \mathbf{Q0_n}$$

and thus if $(M, \Phi) \in \mathbf{PD0_n} \cup \mathbf{P0_n} \cup \mathbf{PS0_n}$ and $\mathcal{B}(M, \Phi) = \{0\}$ then $(M, \Phi) \in \mathbf{Q_n}$. This together with Proposition 4 give:

Corollary 2 *If*

$$(M, \Phi) \in \mathbf{PD0_n} \cup \mathbf{P0_n} \cup \mathbf{PS0_n}$$

and

$$D(\Phi)_\infty \cap \mathcal{N}_0(M) \cap \mathcal{K}(M, \Phi) = \{0\}$$

then

$$\mathcal{R}(M, \Phi) = \mathbb{R}^n.$$

Remark 6 *Various other classes of couples (M, Φ) can be studied in using the asymptotic continuation principle. This is however not the main deal of this paper and will be discussed in a future work.*

3.5 Existence and uniqueness results

In requiring some additional structural properties on Φ as specified in (19), (20) and (21), the uniqueness of the solution of problem $\mathbf{VI}(\mathbf{M}, \mathbf{q}, \mathbf{\Phi})$ can be proved. The following result is a generalization of a well-known existence and uniqueness theorem in complementarity theory. Recall that $\Phi \in D\Gamma(\mathbb{R}^n; \mathbb{R} \cup \{+\infty\})$ means that

$$\Phi(x) = \Phi_1(x_1) + \Phi_2(x_2) + ... + \Phi_n(x_n), \ \forall x \in \mathbb{R}^n, \tag{52}$$

where, for all $1 \leq i \leq n$, we have

$$\Phi_i \in \Gamma(\mathbb{R}^n; \mathbb{R} \cup \{+\infty\}) \tag{53}$$

and

$$\Phi_i(\lambda x) = \lambda \Phi_i(x), \ \forall \lambda \geq 0, \ \forall x \in \mathbb{R}^n. \tag{54}$$

Theorem 3 *Suppose that*

$$\Phi \in D\Gamma(\mathbb{R}^n; \mathbb{R} \cup \{+\infty\})$$

and let $M \in \mathbb{R}^{n \times n}$ be a P-matrix, i.e.

$$x \neq 0 \implies \exists \, \alpha \in \{1, ..., n\} : x_\alpha (Mx)_\alpha > 0. \tag{55}$$

Then, for each $q \in \mathbb{R}^n$, problem $\mathbf{VI}(\mathbf{M}, \mathbf{q}, \mathbf{\Phi})$ has a unique solution.

Proof: We first remark that here $D(\Phi) = D(\Phi_1) \times D(\Phi_2) \times ... \times D(\Phi_n)$. Moreover, as a consequence of assumptions (53) and (54), each set $D(\Phi_i)$ is a nonempty closed convex cone and thus $D(\Phi)_\infty = D(\Phi)$. Moreover, the function Φ is positively homogeneous and thus $\Phi_\infty \equiv \Phi$, $D(\Phi_\infty) = D(\Phi)$. We claim that $(M, \Phi) \in \mathbf{P_n}$. Indeed, if $x \in D(\Phi)_\infty = D(\Phi)$ then for all $j \in \{1, ..., n\}$, we see that $\langle x, e^j \rangle e^j = (0 \ ... \ 0 \ x_j \ 0 \ ... \ 0)^T \in D(\Phi_1) \times ... D(\Phi_{j-1}) \times D(\Phi_j) \times D(\Phi_{j+1}) \times ... \times D(\Phi_n)$ and thus $\langle x, e^j \rangle e^j \in D(\Phi) = D(\Phi_\infty)$. This together with (55) ensure that $(M, \Phi) \in \mathbf{P_n}$. The existence result is then a direct consequence of Corollary 1.

To prove the uniqueness, suppose by contradiction that problem $\mathbf{VI}(\mathbf{M}, \mathbf{q}, \mathbf{\Phi})$ has two different solutions u and U. We set

$$w = Mu + q, \quad W = MU + q.$$

We have

$$\langle w, v - u \rangle + \Phi(v) - \Phi(u) \geq 0, \forall v \in \mathbb{R}^n \tag{56}$$

and

$$\langle W, v - U \rangle + \Phi(v) - \Phi(U) \geq 0, \forall v \in \mathbb{R}^n. \tag{57}$$

We may set $v = u + \langle u, e^j \rangle e^j \in D(\Phi)$ $(1 \leq j \leq n)$ in (56) to get

$$0 \leq w_j u_j + \sum_{k=1}^{n} \Phi_k(u_k + u_j e_k^j) - \sum_{k=1}^{n} \Phi_k(u_k) = w_j u_j + \Phi_j(2u_j) - \Phi_j(u_j).$$

Thus, for all integers $1 \leq j \leq n$:

$$0 \leq w_j u_j + \Phi_j(u_j). \tag{58}$$

Using (57), we check in the same way that, for all integers $1 \leq j \leq n$:

$$0 \leq W_j U_j + \Phi_j(U_j). \tag{59}$$

Let us now set $v = u + \langle U, e^j \rangle e^j \in D(\Phi)$ $(1 \leq j \leq n)$ in (56) to get

$$0 \leq w_j U_j + \Phi_j(u_j + U_j) - \Phi_j(u_j) \tag{60}$$

and $v = U + \langle u, e^j \rangle e^j \in D(\Phi)$ $(1 \leq j \leq n)$ in (57) to get

$$0 \leq W_j u_j + \Phi_j(U_j + u_j) - \Phi_j(U_j). \tag{61}$$

Setting $v = 0$ in (56), we get also

$$0 \geq \langle w, u \rangle + \Phi(u)$$

and thus

$$0 \geq \sum_{j=1}^{n} [w_j u_j + \Phi_j(u_j)]. \tag{62}$$

Using (57) we prove in the same way that

$$0 \geq \sum_{j=1}^{n} [W_j U_j + \Phi_j(U_j)]. \tag{63}$$

Using (58) and (59) together with (62) and (63), we see that, for all integers $1 \leq j \leq n$:

$$w_j u_j + \Phi_j(u_j) = 0, \quad W_j U_j + \Phi_j(U_j) = 0.$$

Then, for all integers $1 \leq j \leq n$:

$$(u - U)_j (M(u - U))_j = (u_j - U_j)(w_j - W_j) = u_j w_j + U_j W_j - u_j W_j - U_j w_j \leq$$
$$\leq -\Phi_j(u_j) - \Phi_j(U_j) + \Phi_j(U_j + u_j) - \Phi_j(U_j) + \Phi_j(u_j + U_j) - \Phi_j(u_j)$$
$$= 2\Phi_j(u_j + U_j) - 2(\Phi_j(u_j) + \Phi_j(U_j)).$$

Note that

$$2\Phi_j(u_j + U_j) = 2\Phi_j(2(\frac{1}{2}u_j + \frac{1}{2}U_j)) = 4\Phi_j(\frac{1}{2}u_j + \frac{1}{2}U_j) \leq 2(\Phi_j(u_j) + \Phi_j(U_j)).$$

Thus, for all integers $1 \leq j \leq n$:

$$(u - U)_j (M(u - U))_j \leq 0.$$

Recalling that $u - U \neq 0$, a contradiction to (55) has been obtained. □

Remark 7 *The famous result on complementarity problems with P-matrices (see e.g. [18]) can be easily deduced from Theorem 3. Indeed, if $\Phi = \Psi_{(\mathbb{R}_+)^n}$ then Φ can be written as in (52) with $\Phi_i = \Psi_{\mathbb{R}_+}$ $(1 \leq i \leq n)$ and if M is a P-matrix then Theorem 3 can be applied to ensure that for each $q \in \mathbb{R}^n$, there exists a unique $u \in (\mathbb{R}_+)^n$ such that $Mu + q \in (\mathbb{R}_+)^n$ and $\langle u, Mu + q \rangle = 0$.*

The following variant of Theorem 3 can be used provided that the functions Φ_i $(1 \leq i \leq n)$ are strictly convex.

Theorem 4 *Suppose that*

$$\Phi \in D\Gamma(\mathbb{R}^n; \mathbb{R} \cup \{+\infty\})$$

and

$$\Phi_i \text{ is strictly convex}, (1 \leq i \leq n), \tag{64}$$

where Φ_i $(1 \leq i \leq n)$ as given in (52).
Let $M \in \mathbb{R}^{n \times \mathbb{N}}$ be a P_0-matrix, i.e.

$$x \neq 0 \implies \exists \alpha \in \{1, ..., n\} : x_\alpha \neq 0 \text{ and } x_\alpha (Mx)_\alpha \geq 0. \tag{65}$$

(a) Then, for each $q \in \mathbb{R}^n$, problem $\mathbf{VI}(\mathbf{M}, \mathbf{q}, \mathbf{\Phi})$ has at most one solution.

(b) If $D(\Phi)_\infty \cap \mathcal{N}_0(M) \cap \mathcal{K}(M, \Phi) = \{0\}$ then, for each $q \in \mathbb{R}^n$, problem $\mathbf{VI}(\mathbf{M}, \mathbf{q}, \mathbf{\Phi})$ has a unique solution.

Proof: As in the proof of Theorem 3, it is easy to check that $(M, \Phi) \in \mathbf{P0_n}$. The existence result in part (b) is then a direct consequence of Corollary 2.

To prove the uniqueness in parts (a) and (b), we suppose by contradiction that problem $\mathbf{VI}(\mathbf{M}, \mathbf{q}, \mathbf{\Phi})$ has two different solutions u and U and we proceed as in the proof of Theorem 3 to see that, for all integers $1 \leq j \leq n$:

$$(u - U)_j (M(u - U))_j \leq 2\Phi_j(u_j + U_j) - 2(\Phi_j(u_j) + \Phi_j(U_j)).$$

Using the strict convexity of the functions Φ_j $(1 \leq j \leq n)$, we obtain finally that for all integers $\alpha \in \{1, ..., n\}$ such that $u_\alpha \neq U_\alpha$:

$$(u - U)_\alpha (M(u - U))_\alpha < 0$$

and a contradiction to (65) has been obtained. □

3.6 Semicoercivity and solvability conditions

The results discussed in the previous section require that $\mathcal{B}(M, \Phi) = \{0\}$. If $\mathcal{B}(M, \Phi) \neq \{0\}$ then in assuming some semicoercivity condition on the matrix M, we may determine conditions on q ensuring the solvability of problem $\mathbf{VI}(\mathbf{M}, \mathbf{q}, \mathbf{\Phi})$.

Theorem 5 *Let $\Phi : \mathbb{R}^n \to \mathbb{R} \cup \{+\infty\}$ be a proper, convex and lower semicontinuous function with closed domain and let $M \in \mathbb{R}^{n \times n}$ be a matrix. Suppose in addition that*

$$\langle Mx, x \rangle \geq 0, \forall x \in D(\Phi) \cup D(\Phi)_\infty.$$

If there exists $x_0 \in D(\Phi)$ such that:

$$\langle q - M^T x_0, v \rangle + \Phi_\infty(v) > 0, \ \forall v \in \ \mathcal{B}(M, \Phi), \ v \neq 0, \tag{66}$$

then problem $\mathbf{VI}(\mathbf{M}, \mathbf{q}, \mathbf{\Phi})$ has at least one solution.

Proof: Let $q \in \mathbb{R}^n$ be given. Here $(M, \Phi) \in \mathbf{PD0_n}$ and using Proposition 6 and Theorem 1, we see that for all $i \in \mathbb{N}, i \neq 0$, there exists $u_i \in D(\Phi)$ such that

$$\langle (\frac{1}{i} I + M) u_i + q, v - u_i \rangle + \Phi(v) - \Phi(u_i) \geq 0, \ \forall v \in \mathbb{R}^n. \tag{67}$$

We claim that the sequence $\{u_i\} \equiv \{u_i; i \in \mathbb{N} \backslash \{0\}\}$ is bounded. Suppose on the contrary that $||u_i|| \to +\infty$ as $i \to +\infty$. Then, for i large enough, $||u_i|| \neq 0$ and we may set: $z_i := \frac{u_i}{||u_i||}$. There exists a subsequence, again denoted by $\{z_i\}$, such that $\lim_{i \to +\infty} z_i = z$ with $||z|| = 1$.

As in the proof of Theorem 2 we check that $z \in \mathcal{B}(M, \Phi)$. Using now (67) with $v = x_0$, we get also:

$$\langle (\frac{1}{i} I + M) u_i, u_i - x_0 \rangle \leq \langle q, x_0 - u_i \rangle + \Phi(x_0) - \Phi(u_i).$$

Here

$$\langle (\frac{1}{i} I + M) u_i, u_i \rangle > 0, \forall i \in \mathbb{N}, i \neq 0,$$

and thus

$$-\langle (\frac{1}{i} I + M) u_i, x_0 \rangle + \langle q, u_i - x_0 \rangle - \Phi(x_0) + \Phi(u_i) < 0.$$

Dividing this last relation by $||u_i||$, we get:

$$-\langle(\frac{1}{i}I+M)z_i,x_0\rangle+\langle q,z_i-\frac{x_0}{||u_i||}\rangle-\frac{\Phi(x_0)}{||u_i||}+\frac{\Phi(||u_i||z_i)}{||u_i||}<0.$$

Taking the limit inferior as $i\to+\infty$, we get:

$$\langle q-M^Tx_0,z\rangle+\liminf_{i\to+\infty}\frac{\Phi(||u_i||z_i)}{||u_i||}\leq 0$$

and thus, using (7), we obtain:

$$\langle q-M^Tx_0,z\rangle+\Phi_\infty(z)\leq 0.$$

This is a contradiction to condition (66) since we have proved above that $z\in\mathcal{B}(M,\Phi)$ and $z\neq 0$.

The sequence $\{u_i\}$ is thus bounded and we may conclude as in the proof of Theorem 2. □

Remark 8 *i) Let us set*

$$\mathcal{R}_+(M,\Phi_\infty):=\{z\in\mathbb{R}^n:\langle z,v\rangle+\Phi_\infty(v)>0,\ \forall v\in\mathcal{B}(M,\Phi),v\neq 0\}$$

and

$$M^T(D(\Phi))=\bigcup_{x\in D(\Phi)}\{M^Tx\}.$$

Condition (66) means that if $q\in M^T(D(\Phi))+\mathcal{R}_+(M,\Phi_\infty)$ *then* $q\in\mathcal{R}(M,\Phi)$.
ii) Note that if $\mathcal{B}(M,\Phi)=\{0\}$ *then condition (66) is trivially satisfied on the empty set.*

Remark 9 *If* $0\in D(\Phi)$ *(which is the case for most practical problems) then we may choose* $x_0=0$ *to see (66) in the more legible form*

$$\langle q,v\rangle+\Phi_\infty(v)>0,\ \forall v\in\mathcal{B}(M,\Phi),v\neq 0. \tag{68}$$

Theorem 5 may obviously be applied to the class of positive semidefinite matrices, i.e.

$$\langle Mx,x\rangle\geq 0,\forall x\in\mathbb{R}^n.$$

This last class of (not necessarily symmetric) matrices is of particular interest for various problems in engineering and it is then worthwhile to specify our results in this framework.

Corollary 3 *Let* $\Phi:\mathbb{R}^n\to\mathbb{R}\cup\{+\infty\}$ *be a proper, convex and lower semicontinuous function with closed domain and let* $M\in\mathbb{R}^{n\times n}$ *be a positive semidefinite matrix.*

a) If $D(\Phi)_\infty\cap\ker\{M+M^T\}\cap\mathcal{K}(M,\Phi)=\{0\}$ *then for each* $q\in\mathbb{R}^n$*, problem* $\mathbf{VI}(\mathbf{M},\mathbf{q},\mathbf{\Phi})$ *has at least one solution.*

b) Suppose that $D(\Phi)_\infty\cap\ker\{M+M^T\}\cap\mathcal{K}(M,\Phi)\neq\{0\}$*. If there exists* $x_0\in D(\Phi)$ *such that:*

$$\langle q-M^Tx_0,v\rangle+\Phi_\infty(v)>0,\ \forall v\in\ D(\Phi)_\infty\cap\ker\{M+M^T\}\cap\mathcal{K}(M,\Phi),\ v\neq 0, \tag{69}$$

then problem $\mathbf{VI}(\mathbf{M},\mathbf{q},\mathbf{\Phi})$ *has at least one solution.*

c) If u_1 *and* u_2 *denote two solutions of problem* $\mathbf{VI}(\mathbf{M},\mathbf{q},\mathbf{\Phi})$ *then*

$$u_1-u_2\in\ \ker\{M+M^T\}. \tag{70}$$

Proof: Setting $X_1 = \ker\{M + M^T\}$, we may write $\mathbb{R}^n = X_1 \oplus X_1^{\perp}$. We denote by P_{X_1} (resp. $P_{X_1^{\perp}}$) the orthogonal projector from $\mathbb{R}^n$ onto X_1 (resp. $X_1^{\perp}$). The matrix M is positive semidefinite and thus (see e.g. Proposition 3.4.3 in [27]) there exists $c > 0$ such that:

$$\langle Mx, x\rangle \geq c||P_{X_1^{\perp}}x||^2, \ \forall x \in \mathbb{R}^n. \tag{71}$$

Thus $\mathcal{N}_-(M) = X_1$. Part a) is then a direct consequence of Corollary 2, part b) follows from Theorem 5 and part c) is a consequence of Proposition 3. □

Remark 10 *Recession tools like recession functions and recession cones can also be used to develop powerful methods, called recession methods, that can be used to the study the solvability of general noncoercive variational inequalities in Hilbert spaces. The idea of this approach goes back to G. Fichera [19]. Various solvability results using recession tools have then been developed in the field of semicoercive linear and semicoercive nonlinear variational and hemivariational inequalities in Hilbert spaces with applications in unilateral mechanics (see e.g. [9], [23]-[28] and the references cited therein).*

If in addition the matrix M is symmetric, then u is a solution of problem $\mathbf{VI}(\mathbf{M}, \mathbf{q}, \mathbf{\Phi})$ if and only if u is a solution of the optimization problem:

$$\min_{x\in\mathbb{R}^n}\{\frac{1}{2}\langle Mx, x\rangle + \langle q, x\rangle + \Phi(x)\}. \tag{72}$$

This last case is also of particular interest.

Corollary 4 *Let $\Phi : \mathbb{R}^n \to \mathbb{R}\cup\{+\infty\}$ be a proper, convex and lower semicontinuous function with closed domain and let $M \in \mathbb{R}^{n\times n}$ be a positive semidefinite and symmetric matrix.*

a) If $D(\Phi)_\infty \cap \ker\{M\} \cap \mathcal{K}(M, \Phi) = \{0\}$ then for each $q \in \mathbb{R}^n$, problem $\mathbf{VI}(\mathbf{M}, \mathbf{q}, \mathbf{\Phi})$ has at least one solution.

b) Suppose that $D(\Phi)_\infty \cap \ker\{M\} \cap \mathcal{K}(M, \Phi) \neq \{0\}$. If

$$\langle q, v\rangle + \Phi_\infty(v) > 0, \ \forall v \in \ D(\Phi)_\infty \cap \ker\{M\} \cap \mathcal{K}(M, \Phi), \ v \neq 0, \tag{73}$$

then problem $\mathbf{VI}(\mathbf{M}, \mathbf{q}, \mathbf{\Phi})$ has at least one solution.

c) If u_1 and u_2 denote two solutions of problem $\mathbf{VI}(\mathbf{M}, \mathbf{q}, \mathbf{\Phi})$ then

$$u_1 - u_2 \in \ \ker\{M\}. \tag{74}$$

and

$$\langle q, u_1 - u_2\rangle = \Phi(u_2) - \Phi(u_1). \tag{75}$$

d) If

$$\Phi(x + z) = \Phi(x), \forall x \in D(\Phi), \ z \in \ \ker\{M\}$$

and

$$\langle q, e\rangle \neq 0, \ \forall e \in \ \ker\{M\}, e \neq 0,$$

then problem $\mathbf{VI}(\mathbf{M}, \mathbf{q}, \mathbf{\Phi})$ has at most one solution.

e) If the function Φ is stricly convex then problem $\mathbf{VI}(\mathbf{M}, \mathbf{q}, \mathbf{\Phi})$ has at most one solution.

Proof: Let us first remark that $\ker\{M + M^T\} = \ker\{M\}$ and parts a) and the first relation in part c) are direct consequences of part a) and c) in Corollary 3. Using the equivalence of problem $\mathbf{VI}(\mathbf{M}, \mathbf{q}, \mathbf{\Phi})$ with problem (72), we get also

$$\frac{1}{2}\langle Mu_1, u_1\rangle + \langle q, u_1\rangle + \Phi(u_1) = \frac{1}{2}\langle Mu_2, u_2\rangle + \langle q, u_2\rangle + \Phi(u_2)$$

from which we deduce the second relation in part c). It is easy to check that part d) is a direct consequence of part c).

Moreover, let $x_0 \in D(\Phi)$ be given. Then, for all $v \in \ker\{M\}$, we have $\langle M^T x_0, v\rangle = \langle x_0, Mv\rangle = 0$. It results that condition (69) is thus here equivalent to condition (73). Part b) is then a direct consequences of part b) in Corollary 3.

Finally, if Φ is strictly convex then the function $x \mapsto \frac{1}{2}\langle Mx, x\rangle + \langle q, x\rangle + \Phi(x)$ is strictly convex too and thus problem (72) has at most one solution. The result in part e) follows since problem (72) is equivalent to problem $\mathbf{VI}(\mathbf{M}, \mathbf{q}, \mathbf{\Phi})$. □

3.7 Copositivity and solvability conditions

Our aim in this section is to show that our results established in Corollary 2 and Theorem 5 recover some results established in the framework of complementarity systems on $K = (\mathbb{R}_+)^n$ involving copositive plus matrices.

Let $K \subset \mathbb{R}^n$ be a nonempty closed convex cone. We set:

$$\mathcal{B}(M, K) = \{x \in K : Mx \in K^* \text{ and } \langle Mx, x\rangle = 0\}. \tag{76}$$

Here $\mathcal{B}(M, \Psi_K) \equiv \mathcal{B}(M, K)$ and problem $\mathbf{VI}(\mathbf{M}, \mathbf{q}, \mathbf{\Psi_K})$ is equivalent to the complementarity problem $\mathbf{CP}(\mathbf{M}, \mathbf{q}, \mathbf{K})$:

$$\begin{cases} u \in K \\ Mu + q \in K^* \\ \langle u, Mu + q\rangle = 0. \end{cases}$$

Our results in Corollary 2 and Theorem 5 read here:

Corollary 5 *Let $K \subset \mathbb{R}^n$ be a closed convex cone. Let M be a matrix satisfying:*

$$\langle Mx, x\rangle \geq 0, \ \forall x \in K. \tag{77}$$

a) If $\mathcal{B}(M, K) = \{0\}$ then for each $q \in \mathbb{R}^n$, problem $\mathbf{CP}(\mathbf{M}, \mathbf{q}, \mathbf{K})$ has at least one solution.

b) Suppose that $\mathcal{B}(M, K) \neq \{0\}$. If there exists $x_0 \in K$ such that

$$\langle q - M^T x_0, v\rangle > 0, \ \forall v \in \ \mathcal{B}(M, K), \ v \neq 0, \tag{78}$$

then problem $\mathbf{CP}(\mathbf{M}, \mathbf{q}, \mathbf{K})$ has at least one solution.

c) Moreover, if u_1 and u_2 denote two solutions of problem $\mathbf{CP}(\mathbf{M}, \mathbf{q}, \mathbf{K})$ then

$$u_1 - u_2 \in \mathcal{N}_-(M). \tag{79}$$

□

Remark 11 *i) Recall that one says that a matrix $M \in \mathbb{R}^{n\times n}$ is copositive plus on K provided that*

$$\langle Mx, x\rangle \geq 0, \forall x \in K$$

and

$$(x \in K,\ \langle Mx, x\rangle = 0) \implies x \in \ker\{M + M^T\}.$$

In this case

$$\mathcal{B}(M, K) = \{x \in K : Mx \in K^* \text{ and } x \in \ker\{M + M^T\}\}.$$

ii) Note that the approach developed in [20] and [21] for complementarity systems originated the approach developed in [23] for variational inequalities. We note that Theorem 5 recovers both solvability results and unifies both approaches (anyway in the framework of finite dimensional problems).

4 Variational inequalities method in electronics

Several researchers have recently shown that mathematical tools from complementarity systems theory and variational inequalities theory may be used to develop rigorous mathematical study of circuits in electronics involving devices like diodes, Zener diodes and varistors that are characterized by set-valued ampere-volt characteristics. Mathematical approaches using tools from mathematical programming and complementarity systems theory have been particularly developed in [15], [16], [31], [34], [37] and the references cited therein while mathematical approaches using tools from set-valued analysis and variational inequalities theory have been studied in [7], [8], [10], [13], [17] and [22].

4.1 Set-valued Ampere-Volt Characteristics in Electronics

Electrical devices like diodes are described in terms of Ampere-Volt characteristics (i, V) that is a graph expressing the difference of potential V across the device as a function of current i through the device.

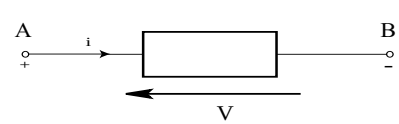

Figure 1: Electrical Device

The schematic symbol of a circuit element is given in Figure 1. The conventional current flow i will be depicted on the conductor in the direction of the arrow and the potential $V := V_A - V_B$ (V_A (resp. V_B)) potential of point

A (resp. B) across the device will be denoted alongside the device. Experimental measures as well as empirical and physical models lead to a variety of monotone graphs that may present vertical branches. The reader can find general descriptions of devices and Ampere-Volt characteristics either in the appropriate electronics literature or in electronics society catalogs (see e.g. [1], [2], [3], [4], [5], [6], [36]).

Let us so suppose here that we may write:

$$V \in \mathcal{F}(i),\ (i \in \mathbb{R})$$

for some set-valued function $\mathcal{F} : \mathbb{R} \rightrightarrows \mathbb{R}$. The domain $D(\mathcal{F})$ of $\mathcal{F}$ is defined by:

$$D(\mathcal{F}) = \{x \in \mathbb{R} : \mathcal{F} \neq \emptyset\}.$$

We assume that $\mathcal{F}$ is maximal monotone, i.e.

$$(z_1 - z_2)(x_1 - x_2) \geq 0,\ \forall\, x_1, x_2 \in D(\mathcal{F}), z_1 \in \mathcal{F}(x_1), z_2 \in \mathcal{F}(x_2)$$

and the graph $G(\mathcal{F})$ of $\mathcal{F}$, i.e.

$$G(\mathcal{F}) := \{(x, y) \in \mathbb{R}^n \times \mathbb{R}^n : x \in D(\mathcal{F}),\ y \in \mathcal{F}(x)\}$$

is not properly included in any other monotone subset of $\mathbb{R} \times \mathbb{R}$.

A classical result (see e.g. Proposition 1.3.15 in [27]) ensures that there exists a proper, convex and lower semi-continuous function $\varphi : \mathbb{R} \to \mathbb{R} \cup \{+\infty\}$ such that

$$\mathcal{F}(i) = \partial\varphi(i),\ (i \in \mathbb{R}).$$

Note that there exists $-\infty \leq a \leq b \leq +\infty$ such that $]a, b[\ \subset D(\mathcal{F}) \subset [a, b]$ and φ can be determined by the formula:

$$\varphi(i) = \begin{cases} \int_{i_0}^{i} \beta^0(s)ds \ \text{ if } \ i \in [a, b] \\ \\ +\infty \ \text{ if } \ i \in \mathbb{R}\backslash[a, b] \end{cases} \tag{80}$$

where $i_0 \in\ ]a, b[$ and $\beta^0 : D(\mathcal{F}) \to \mathbb{R}$ denotes the minimal section of $\mathcal{F}$, i.e. $\beta^0(x) \in \mathcal{F}(x)$ and $|\beta^0(x)| = \inf\{|w| : w \in \mathcal{F}(x)\}$. Remark that the function φ in (80) is determined by $\mathcal{F}$ up to an additive constant.

Note also that:

$$\partial\varphi(i) = \left[\beta^0(i^-), \beta^0(i^+)\right],\ \forall i \in]a, b[,$$

where

$$\beta^0(i^-) = \lim_{z \to i, z < i} \beta(z)$$

and

$$\beta^0(i^+) = \lim_{z \to i, z > i} \beta(z).$$

We have

$$V \in \partial\varphi(i) \Longleftrightarrow i \in \partial\varphi^*(V) \Longleftrightarrow \varphi(i) + \varphi^*(V) = iV.$$

Remark 12 *(Terminology) We will say that an electrical device is* <u>*VAM-admissible*</u> *provided that its ampere-volt characteristic graph (i, V) is maximal monotone. Then there exists a proper convex and lower semicontinuous function $\varphi : \mathbb{R} \to \mathbb{R} \cup \{+\infty\}$ such that*

$$V \in \partial\varphi(i),\ \forall i \in \mathbb{R}\,.$$

The function φ will be called the <u>*electrical superpotential*</u> *(determined up to an additive constant) of the device. Roughly speaking, the electrical superpotential φ appears as a "primitive" of $\mathcal{F}$ in the sense that the "derivative" (in the generalized sense) of φ recovers the set-valued function $\mathcal{F}$.*

4.1.1 Diode models

The diode is a device that constitutes a rectifier which permits the easy flow of charges in one direction but restrains the flow in the opposite direction. Diodes are used in power electronics applications like rectifier circuits, switching inverter and converter circuits.

Example 2 (IDEAL MODEL) *Figure 2 illustrates the ampere-volt characteristic of an ideal diode.*

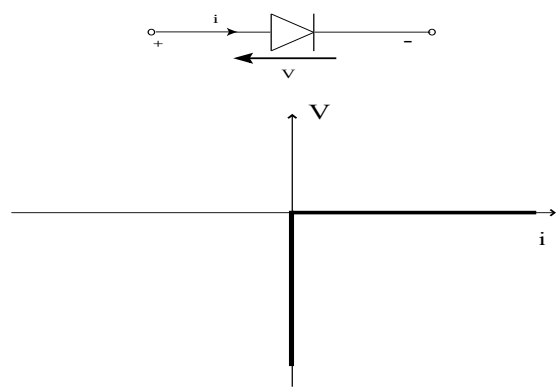

Figure 2: Ideal diode model

This is a model in which the diode is a simple switch. If $V < 0$ *then* $i = 0$ *and the diode is blocking. If* $i > 0$ *then* $V = 0$ *and the diode is conducting. We first see that the ideal diode is described by the complementarity relation*

$$V \leq 0, \quad i \geq 0, \quad Vi = 0$$

that is also

$$\min\{-V, i\} = 0.$$

The electrical superpotential of the ideal diode is

$$\varphi_D(x) = \Psi_{R_+}(x), \quad (x \in \mathbb{R})$$

Then

$$\varphi_D^*(z) = \Psi_{R_-}(z), \quad (z \in \mathbb{R})$$

and the recession function of the electrical superpotential is:

$$(\varphi_D)_\infty(x) = \varphi_D(x), \ (x \in \mathbb{R}).$$

We have also

$$\partial\varphi_D(x) := \begin{cases} \mathbb{R}_- & \textit{if } x = 0 \\ 0 & \textit{if } x > 0 \\ \emptyset & \textit{if } x < 0 \end{cases}, \quad (x \in \mathbb{R})$$

and

$$\partial\varphi_D^*(z) := \begin{cases} \mathbb{R}_+ & \textit{if } z = 0 \\ 0 & \textit{if } z < 0 \\ \emptyset & \textit{if } z > 0 \end{cases}, \quad (z \in \mathbb{R}).$$

The complementarity relation can be written as

$$V \in \partial\varphi_D(i) \Longleftrightarrow i \in \partial\varphi_D^*(V) \Longleftrightarrow \varphi_D(i) + \varphi_D^*(V) = iV.$$

Example 3 (PRACTICAL DIODE MODEL) *Figure 3 illustrates the ampere-volt characteristic of a practical diode model.*

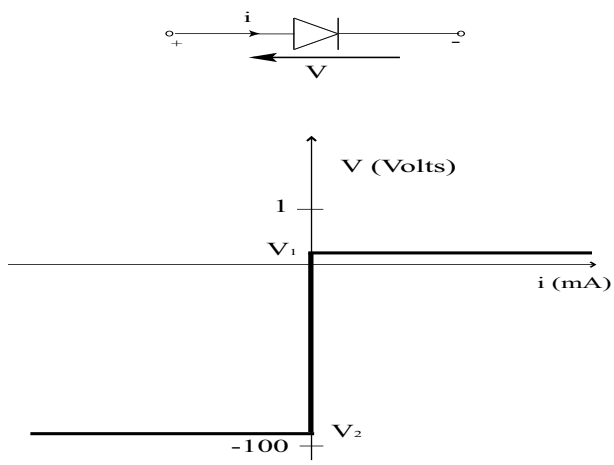

Figure 3: Practical diode model

There is a voltage point, called the knee voltage V_1, at which the diode begins to conduct and a maximum reverse voltage, called the peak reverse voltage V_2, that will not force the diode to conduct. When this voltage is exceeded, the depletion may breakdown and allow the diode to conduct in the reverse direction. Note that usually $\mid V_2 \mid >> \mid V_1 \mid$ and the model is locally ideal.

For general purpose diodes used in low frequency/speed applications, $\mid V_1 \mid \simeq 0.7 - 2.5$ V and $\mid V_2 \mid \simeq 5$ kV; for high voltage rectifier diodes, $\mid V_1 \mid \simeq 10$ V and $\mid V_2 \mid \simeq 30$ kV; for fast diodes used in switched mode power supply and inverter circuits, $\mid V_1 \mid \simeq 0.7 - 1.5$ V and $\mid V_2 \mid \simeq 3$ kV and for Schottky diodes used in high frequency applications, $\mid V_1 \mid \simeq 0.2 - 0.9$ V and $\mid V_2 \mid \simeq 100$ V.

The electrical superpotential of the practical diode is

$$\varphi_{PD}(x) = \begin{cases} V_1 x & \textit{if } x \geq 0 \\ V_2 x & \textit{if } x < 0 \end{cases}, \quad (x \in \mathbb{R}).$$

Then

$$\varphi_{PD}^*(z) = \Psi_{[V_2, V_1]}(z), \quad (z \in \mathbb{R})$$

and the recession function of the electrical superpotential is given by:

$$(\varphi_{PD})_\infty(x) = \varphi_{PD}(x), \ (x \in \mathbb{R}).$$

We see that

$$\partial\varphi_{PD}(x) = \begin{cases} V_2 \ \ \textit{if} \ \ x < 0 \\ [V_2, V_1] \ \ \textit{if} \ \ x = 0 \\ V_1 \ \ \textit{if} \ \ x > 0 \end{cases} \ , \ \ (x \in \mathbb{R})$$

recovers the ampere-volt characteristic (i, V) *while*

$$\partial\varphi^*_{PD}(z) = \begin{cases} \mathbb{R}_- \ \ \textit{if} \ \ z = V_2 \\ 0 \ \ \textit{if} \ \ z \in]V_2, V_1[\\ \mathbb{R}_+ \ \ \textit{if} \ \ z = V_1 \\ \emptyset \ \ \textit{if} \ \ z \in \mathbb{R} \setminus [V_2, V_1] \end{cases} \ , \ \ (z \in \mathbb{R}).$$

recovers the volt-ampere characteristic (V, i)*. The ampere-volt characteristic of the practical diode can thus be written as*

$$V \in \partial\varphi_{PD}(i) \Longleftrightarrow i \in \partial\varphi^*_{PD}(V) \Longleftrightarrow \varphi_{PD}(i) + \varphi^*_{PD}(V) = iV.$$

Example 4 (COMPLETE DIODE MODEL) *Figure 4 illustrates a complete diode model which includes the effect of the natural resistance of the diode, called the bulk resistance, the reverse current* I_{R_1}*, the diode capacitance and the diffusion current. This last model is more accurate and represents the true operating characteristics of the diode.*

Note that $\mid V_4 \mid << \mid V_1 \mid$*. For example, the 10ETS.. rectifier (SAFEIR series [3]) has been designed with* $\mid V_1 \mid = 1.1$ *V,* $\mid V_4 \mid = 800 - 1600$ *V,* $I_{R1} = 0.05$ *mA and with a bulk resistance equal to* 20 *m*Ω*.*
Let us use the notation of Figure 4. It is implicitly assumed that

$$I_{R2} < 0 < I_{R1}, \ V_4 < V_2 < 0 < V_1 < V_3.$$

Let us also set:

$$\alpha := \frac{(V_3 - V_1)}{(I_{R3} - I_{R1})}, \ \beta := \frac{(I_{R1}V_3 - I_{R3}V_1)}{(I_{R3} - I_{R1})}, \ \gamma := \frac{I_{R1}(I_{R1}V_3 - I_{R3}V_1)}{2(I_{R3} - I_{R1})}.$$

The electrical superpotential of the complete diode is

$$\varphi_{CD}(x) = \begin{cases} V_4 x + I_{R2}(\frac{V_2}{2} - V_4) \ \ \textit{if} \ \ x \leq I_{R2} \\ \frac{V_2}{2I_{R2}} x^2 \ \ \textit{if} \ \ I_{R2} < x \leq 0 \\ \frac{V_1}{2I_{R1}} x^2 \ \ \textit{if} \ \ 0 < x \leq I_{R1} \\ \frac{1}{2}\alpha x^2 - \beta x + \gamma \ \ \textit{if} \ \ I_{R1} < x \end{cases} \ , \ \ (x \in \mathbb{R})$$

and simple calculations yield:

$$\partial\varphi_{CD}(x) = \begin{cases} V_4 \ \ \textit{if} \ \ x < I_{R2} \\ [V_4, V_2] \ \ \textit{if} \ \ x = I_{R2} \\ \frac{V_2}{I_{R2}} x \ \ \textit{if} \ \ I_{R2} < x \leq 0 \\ \frac{V_1}{I_{R1}} x \ \ \textit{if} \ \ 0 < x \leq I_{R1} \end{cases} \ , \ \ (x \in \mathbb{R}).$$

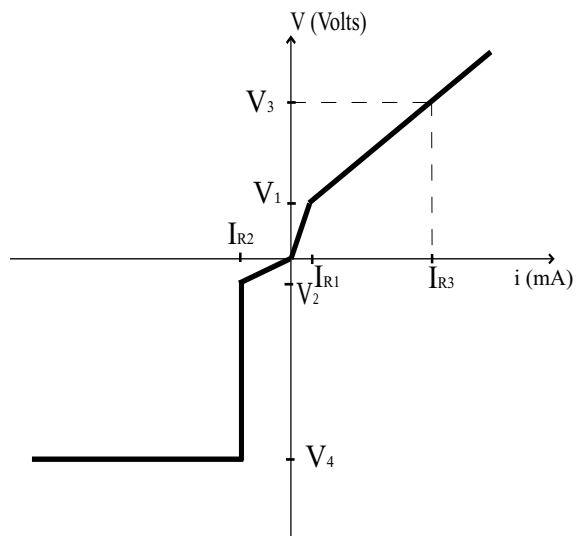

Figure 4: Complete diode model

On the other hand, we may compute the conjugate function:

$$\varphi^*_{CD}(z) = \begin{cases} +\infty \ \ \textit{if} \ \ z \leq V_4 \\ \\ I_{R2}(z - \dfrac{V_2}{2}) \ \ \textit{if} \ \ V_4 < z \leq V_2 \\ \\ \dfrac{I_{R2}}{2V_2} z^2 \ \ \textit{if} \ \ V_2 < z \leq 0 \\ \\ \dfrac{I_{R1}}{2V_1} z^2 \ \ \textit{if} \ \ 0 < z \leq V_1 \\ \\ \dfrac{1}{2}\alpha z^2 + (I_{R_1} - \alpha V_1)z + \dfrac{1}{2}V_1(\alpha V_1 - I_1) \ \ \textit{if} \ \ V_1 < z \end{cases} \quad , \quad (z \in \mathbb{R})$$

and

$$\partial\varphi^*_{CD}(z) = \begin{cases} \emptyset \ \ \textit{if} \ \ z < V_4 \\ \\ ]-\infty, I_{R2}] \ \textit{if} \ \ z = V_4 \\ \\ I_{R2} \ \ \textit{if} \ \ V_4 < z \leq V_2 \\ \\ \dfrac{I_{R2}}{V_2} z \ \ \textit{if} \ \ V_2 < z \leq 0 \\ \\ \dfrac{I_{R1}}{V_1} z \ \ \textit{if} \ \ 0 < z \leq V_1 \\ \\ \alpha z + (I_{R1} - \alpha V_1) \ \ \textit{if} \ \ V_1 < z \end{cases} \quad , \quad (z \in \mathbb{R}).$$

The recession function of the electrical superpotential is here:

$$(\varphi_{CD})_\infty(x) = \begin{cases} V_4 x \ \ \textit{if} \ \ x \leq I_{R2} \\ \\ +\infty \ \ \textit{if} \ \ x > I_{R2} \end{cases} \quad , \quad (x \in \mathbb{R}).$$

The ampere-volt characteristic of the complete diode can then be written as

$$V \in \partial\varphi_{CD}(i) \Longleftrightarrow i \in \partial\varphi^*_{CD}(V) \Longleftrightarrow \varphi_{CD}(i) + \varphi^*_{CD}(V) = iV.$$

Example 5 (EMPIRICAL DIODE MODEL) *An empirical model used in electronics to describe the ampere-volt characteristic of a diode is:*

$$V(i) = \frac{V_T}{\eta} \ln(\frac{i}{I_S} + 1) \ \ (i > -I_S),$$

where I_S is the saturating reverse current ($10^{-15} \leq . \leq 10^{-12}$ A), V_T is the thermodynamic voltage (25 mV) and η is the emission coefficient ($1 \leq . \leq 2$). This model is usually considered in the engineering literature when a rigorous mathematical analysis taking care of the domain of V is not required. It is however possible to proceed to a suitable mathematical treatment as above in defining the set-valued function $\mathcal{V} : \mathbb{R} \rightrightarrows \mathbb{R}$ by

$$\mathcal{V}(i) = \begin{cases} \frac{V_T}{\eta} \ln(\frac{i}{I_S} + 1) \ \ \textit{if} \ \ i > -I_S \\ \\ \emptyset \ \ \textit{if} \ \ i \leq -I_S. \end{cases}$$

Then setting

$$\varphi_{ED}(i) = \begin{cases} \frac{V_T}{\eta} \ln(\frac{i}{I_S} + 1)(i + I_S) - \frac{V_T I_S}{\eta} i \ \ \textit{if} \ \ i > -I_S \\ \\ \frac{V_T I_S^2}{\eta} \ \ \textit{if} \ \ i = -I_S \\ \\ +\infty \ \ \textit{if} \ \ i < -I_S \end{cases}$$

we see that

$$\mathcal{V}(i) = \partial\varphi_{ED}(i) \ \ (i \in \mathbb{R}).$$

Moreover

$$(\varphi_{ED})_\infty(i) = \Psi_{\{0\}}(i), \ (i \in \mathbb{R}).$$

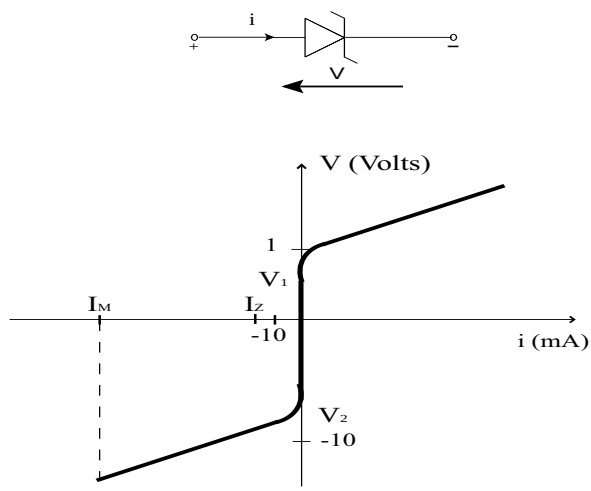

Figure 5: Zener diode model

4.1.2 Zener diode models

The Zener diodes are made to permit current to flow in the reverse direction if the voltage is larger than the rated breakdown or "Zener voltage" V_2. For example, for a common Zener diode, $V_1 \simeq 0.7$ volts and $V_2 \simeq -7$ volts.

The Zener diode (see Figure 5) is a good voltage regulator to maintain a constant voltage regardless of minor variations in load current or input voltage. There is a current point I_Z, called the Zener knee current, which is the minimum value of the Zener current required to maintain voltage regulation and a maximum allowable value of Zener current I_M. Currents above this value will damage or destroy the system.

The graph corresponding to the ampere-volt characteristic (i, V) is maximal monotone and there exists a proper convex and continuous electrical superpotential $\varphi : \mathbb{R} \to \mathbb{R}$ such that

$$V \in \partial\varphi(i), \quad (i \in \mathbb{R}).$$

Example 6 (IDEAL ZENER DIODE MODEL) *The ideal Zener diode model (see Figure 6) is given by the complete diode model (see Figure 3) with the appropriate values for V_1 and V_2. This means that the voltage across the diode is constant over a wide range of device current values.*

Example 7 (PRACTICAL ZENER DIODE MODEL) *This model (see Figure 7) is a piecewise linear model that includes the effects of the Zener impedance.*

Let us use the notation of Figure 7. It is here implicitly assumed that

$$I_1 < 0 < I_2, \quad V_1 < V_3 < 0 < V_4 < V_2.$$

The electrical superpotential of the Zener diode is

$$\varphi_Z(x) = \begin{cases} \frac{(V_1 - V_3)}{2I_1} x^2 + V_3 x \ \ \textit{if} \ \ x < 0 \\ \\ \frac{(V_2 - V_4)}{2I_2} x^2 + V_4 x \ \ \textit{if} \ \ x \geq 0 \end{cases}, \quad (x \in \mathbb{R}).$$

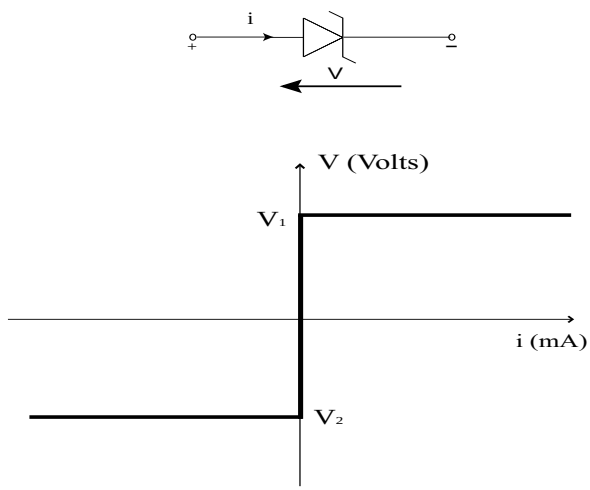

Figure 6: Ideal Zener diode model

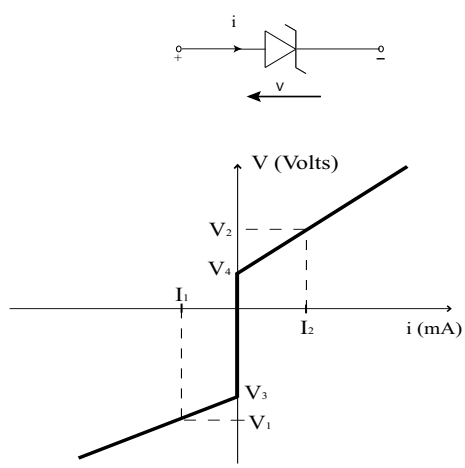

Figure 7: Practical Zener diode model

Then

$$\varphi_Z^*(z) = \begin{cases} \frac{I_1}{2(V_1-V_3)}(z^2 - 2V_3 z + V_3^2) \ \ \textit{if} \ \ z < V_3 \\ 0 \ \ \textit{if} \ \ V_3 \leq z \leq V_4 \\ \frac{I_2}{2(V_2-V_4)}(z^2 - 2V_4 z + V_4^2) \ \ \textit{if} \ \ V_4 < z \end{cases} \quad , \quad (z \in \mathbb{R}).$$

The recession function of the electrical superpotential is given by:

$$(\varphi_Z)_\infty(x) = \Psi_{\{0\}}(x),\ (x \in \mathbb{R}).$$

Moreover

$$\partial\varphi_Z(x) = \begin{cases} \frac{(V_1-V_3)}{I_1}x + V_3 \ \ \textit{if} \ \ x < 0 \\ [V_3, V_4] \ \ \textit{if} \ \ x = 0 \\ \frac{(V_2-V_4)}{I_2}x + V_4 \ \ \textit{if} \ \ x > 0 \end{cases}, \ \ (x \in \mathbb{R})$$

and

$$\partial\varphi_Z^*(z) = \begin{cases} \frac{I_1}{V_1-V_3}(z - V_3) \ \ \textit{if} \ \ z < V_3 \\ 0 \ \ \textit{if} \ \ V_3 \leq z \leq V_4 \\ \frac{I_2}{V_2-V_4}(z - V_4) \ \ \textit{if} \ \ V_4 < z \end{cases}, \ \ (z \in \mathbb{R}).$$

The ampere-volt characteristic of the complete diode can thus be written as

$$V \in \partial\varphi_Z(i) \Longleftrightarrow i \in \partial\varphi_Z^*(V) \Longleftrightarrow \varphi_Z(i) + \varphi_Z^*(V) = iV.$$

Example 8 (VARISTOR) *A varistor is a nonlinear device that has an electrical behavior similar to the Zener diode (with* $\mid V_1 \mid = \mid V_2 \mid$*). More precisely, the varistor (see Figure 8) is a voltage-dependent resistor with a symmetrical monotone ampere-volt characteristic.*

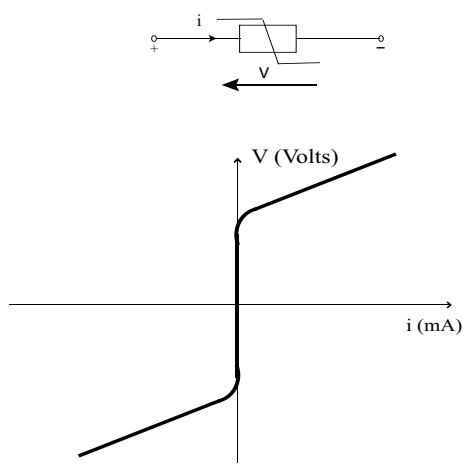

Figure 8: Varistor

It is used connected in parallel with the electronic device or circuit that is to be guarded in order to form a low-resistance shunt when voltage increases and thus prevent any further rise in the overvoltage.

4.2 Mathematical Formulation of a Class of Non-regular Models in Electronics

A circuit in electronics is formed by the interconnection of electrical devices like generators, resistors, capacitors, inductors, transistors, diodes and various others. The behaviour of a circuit is usually described in terms of currents and voltages that can be specified through each involved electrical device. The approach to state a mathematical model that can be used to determine these currents and voltages consists to formulate the ampere-volt characteristic

of each electrical device, to write the Kirchoff's voltage law expressing that the algebraic sum of the voltages between successive nodes in all mesches in the circuit are zero and to write the Kirchhoff's current law stating that the algebraic sum of the currents in all branches which converge to a common node equal zero.

The practice (see [8] and [12]) shows that a large class of circuits can be studied via the following general mathematical formalism.

Let $A \in \mathbb{R}^{n\times n}$, $B \in \mathbb{R}^{n\times m}$, $C \in \mathbb{R}^{m\times n}$ and $D \in \mathbb{R}^{n\times p}$ be given matrices. Let $\Xi : \mathbb{R}^m \to \mathbb{R} \cup \{+\infty\}$ be a given proper, convex and lower semicontinuous function. Let $u \in \mathbb{R}^p$ be given, we consider the problem:

$\mathbf{NRM}(\mathbf{A}, \mathbf{B}, \mathbf{C}, \mathbf{D}, \mathbf{u}, \mathbf{\Xi})$: Find $(x, y_L) \in \mathbb{R}^n \times \mathbb{R}^m$ such that

$$Ax - By_L + Du = 0, \tag{81}$$

$$y = Cx, \tag{82}$$

and

$$y_L \in \partial\Xi(y). \tag{83}$$

The matrices A, B, C and D in (81) are structural matrices used to state Kirchoff's voltage laws and Kirchoff's current laws in matrix form. The matrix A depends of electrical parameters like resistances, capacitances and inductances. Usually u is a control vector that drives the system, x denotes a current vector and y_L is a voltage vector corresponding to electrical devices like diodes whose (possibly set-valued) ampere-volt characteristics can be described as in (83).

It is noteworthy that (81)–(83) may represent the equations of a static circuit, but also the generalized equation that is to be satisfied by the equilibrium points of a dynamical circuit, or more generally of a class of differential inclusions (see [12] for applications in the absolute stability problem).

Let us now make the following two assumptions:

Assumption $(H1)$: $\Xi : \mathbb{R}^m \to \mathbb{R} \cup \{+\infty\}$ *is proper convex lower semicontinuous and*

$$D(\Xi) = \overline{D(\Xi)}.$$

Assumption $(H2)$: *There exists* $\bar{x}_0 \in \mathbb{R}^n$ *such that* Ξ *is finite and continuous at* $\bar{y}_0 = C\bar{x}_0$.

Assumption $(H3)$: *There exists an invertible matrix* $P \in \mathbb{R}^{n\times n}$ *such that*

$$PB = C^T$$

We set

$$\Phi(x) = \Xi(Cx), \ (\forall x \in \mathbb{R}^n). \tag{84}$$

Then

$$D(\Phi) = \{x \in \mathbb{R}^n : Cx \in D(\Xi)\}. \tag{85}$$

Assumption $(H2)$ entails that $D(\Phi) \neq \emptyset$ and it is clear that $\Phi : \mathbb{R}^n \to \mathbb{R} \cup \{+\infty\}$ is proper convex and lower semicontinuous. Moreover $D(\Phi)$ is convex since $D(\Xi)$ is convex and closed since $D(\Xi)$ is supposed to be closed in $(H1)$.

Proposition 7 *Suppose that assumptions* $(H1) - (H3)$ *are satisfied and let* Φ *be defined as in (84).*

i) If (x, y_L) is a solution of Problem $\mathbf{NRM}(\mathbf{A}, \mathbf{B}, \mathbf{C}, \mathbf{D}, \mathbf{u}, \mathbf{\Xi})$ then x is a solution of problem $\mathbf{VI}(-\mathbf{PA}, -\mathbf{PDu}, \mathbf{\Phi})$, i.e.

$$\langle -PAx - PDu, v - x\rangle + \Phi(v) - \Phi(x) \geq 0, \forall v \in \mathbb{R}^n. \tag{86}$$

ii) If x is a solution of problem $\mathbf{VI}(-\mathbf{PA}, -\mathbf{PDu}, \mathbf{\Phi})$ then there exists $y_L \in \mathbb{R}^m$ such that (x, y_L) is a solution of Problem $\mathbf{NRM}(\mathbf{A}, \mathbf{B}, \mathbf{C}, \mathbf{D}, \mathbf{u}, \mathbf{\Xi})$.

Proof: Let (x, y_L) be a solution of Problem (81)-(83). Then

$$0 \in Ax - B\partial\Xi(Cx) + Du$$

which is equivalent to

$$0 \in PAx - PB\partial\Xi(Cx) + PDu$$

since P is invertible. Thus

$$0 \in PAx - C^T\partial\Xi(Cx) + PDu.$$

The existence of a vector $\bar{y}_0 = C\bar{x}_0$ at which Ξ is finite and continuous ensures that (see e.g. Proposition 1.3.11 in [27]):

$$C^T\partial\Xi(Cz) = \partial\Phi(z),\ (z \in \mathbb{R}^n).$$

Thus

$$0 \in PAx + PDu - \partial\Phi(x),$$

that is

$$\langle -PAx - PDu, v - x\rangle + \Phi(v) - \Phi(x) \geq 0, \forall v \in \mathbb{R}^n.$$

Suppose now that x is solution of Problem (86). We see as above that:

$$0 \in Ax - B\partial\Phi(Cx) + Du.$$

It results that there exists $y_L \in \partial\Phi(Cx)$ such that:

$$0 = Ax - By_L + Du.$$

Then we obtain the relations in (81)-(83) by setting $y = Cx$. □

Proposition 7 means that if assumptions $(H1)-(H3)$ hold then problem (81)-(83) can be studied via the variational inequality $\mathbf{VI}(\mathbf{M}, \mathbf{q}, \mathbf{\Phi})$ with

$$M = -PA, \quad q = -PDu, \quad \Phi \equiv \Xi \circ C. \tag{87}$$

The results discussed in Section 3 can thus be used here too. The following result is then of particular interest to calculate the recession tools involved in $\mathcal{B}(M, q, \Phi)$, that are here $D(\Phi)_\infty$, Φ_∞ and $D(\Phi_\infty)$ with $\Phi \equiv \Xi \circ C$.

Proposition 8 *Suppose that assumptions $(H1)$ and $(H3)$ are satisfied and let Φ be defined as in (84). Then*

$$D(\Phi)_\infty = \{x \in \mathbb{R}^n : Cx \in D(\Xi)_\infty\}, \tag{88}$$

$$\Phi_\infty(x) = \Xi_\infty(Cx),\ \forall x \in \mathbb{R}^n \tag{89}$$

and

$$D(\Phi_\infty) = \{x \in \mathbb{R}^n : Cx \in D(\Xi_\infty)\}. \tag{90}$$

Proof: i) Let us set

$$\mathcal{D}_\infty(C,\Xi) := \{x \in \mathbb{R}^n : Cx \in D(\Xi)_\infty\}.$$

It is easy to see that

$$D(\Phi)_\infty = \mathcal{D}_\infty(C,\Xi). \tag{91}$$

Indeed, if $e \in D(\Phi)_\infty$ then $\lambda e + \bar{x}_0 \in D(\Phi), \forall \lambda > 0$. Thus $C(\lambda e + \bar{x}_0) \in D(\Xi), \forall \lambda > 0$. Here $\bar{y}_0 = C\bar{x}_0 \in D(\Xi)$ and

$$Ce \in \bigcap_{\lambda > 0} \frac{1}{\lambda}(D(\Xi) - \bar{y}_0) = D(\Xi)_\infty.$$

Thus $e \in \mathcal{D}_\infty(C,\Xi)$.

Reciprocally, if $e \in \mathcal{D}_\infty(C,\Xi)$ then $Ce \in D(\Xi)_\infty$. Thus $\lambda Ce + \bar{y}_0 \in D(\Xi), \forall \lambda > 0$. Thus $\lambda e + \bar{x}_0 \in D(\Phi), \forall \lambda > 0$ and then

$$e \in \bigcap_{\lambda > 0} \frac{1}{\lambda}(D(\Phi) - \bar{x}_0) = D(\Phi)_\infty.$$

ii) We have:

$$\Phi_\infty(x) = \lim_{\lambda \to +\infty} \frac{1}{\lambda}\Xi(C(\bar{x}_0 + \lambda x)) = \lim_{\lambda \to +\infty} \frac{1}{\lambda}\Xi(\bar{y}_0 + \lambda Cx) = \Xi_\infty(Cx) \quad (x \in \mathbb{R}^n).$$

iii) The relation in (90) is a direct consequence of (89). □

5 Diode Circuits

We are now in position to study diode circuits like amplitude selectors that are used to transmit the part of a given waveform which lies above or below some given reference level, double-diode clippers that are used to limit the input amplitude at two independent levels, sampling gates which are transmission circuits in which the output is a reproduction of an input waveform during a selected time interval and is zero otherwise and other circuits involving both diodes and operational amplifiers.

We will present some electrical systems involving ideal diodes that can be studied by means of classical tools from complementarity theory and then discuss some extensions to systems involving practical components.

Let us first start with two simple clipping circuits to illustrate the essence of our methodology.

Example 9 (Clipping circuit 1 / Ideal diode) *Let us consider the circuit of figure 9 involving a load resistance $R > 0$, an input-signal source u and corresponding instantaneous current i, an ideal diode as a shunt element and a supply voltage E.*

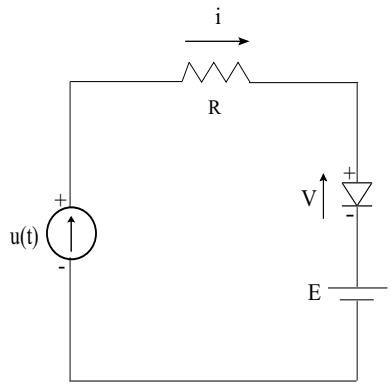

Figure 9: Clipping circuit 1: Diode as shunt element

Kirchoff's voltage law gives

$$u = U_R + V + E$$

where $U_R = Ri$ *denotes the difference of potential across the resistor and* $V \in \partial\Psi_{\mathbb{R}_+}(i)$ *is the difference of potential across diode. Thus*

$$E + Ri - u \in -\partial\Psi_{\mathbb{R}_+}(i) \tag{92}$$

which is equivalent to $\mathbf{VI}(\mathbf{R}, \mathbf{E} - \mathbf{u}, \mathbf{\Psi}_{\mathbb{R}_+})$*, i.e.*

$$i \in \mathbb{R}_+ : (Ri + E - u)(v - i) \geq 0, \forall v \in \mathbb{R}_+.$$

Here $R > 0$ *and for each* $E, u \in \mathbb{R}$*, we may apply Corollary 1 to assert that (92) has a unique solution. Moreover:*

$$(92) \iff \frac{E}{R} + i - \frac{u}{R} \in -\partial\Psi_{\mathbb{R}_+}(i) \iff -\frac{E}{R} + \frac{u}{R} \in i + \partial\Psi_{\mathbb{R}_+}(i)$$

$$\iff i = (id_{\mathbb{R}} + \partial\Psi_{\mathbb{R}_+})^{-1}(\frac{u - E}{R}) = \frac{1}{R}\max\{0, u - E\}.$$

If $u \leq E$ *then the diode is blocking while if* $u > E$ *then the diode is conducting.*
Let us now consider a driven time depending input $t \mapsto u(t)$ *and define the output-signal* $t \mapsto V_o(t)$ *as*

$$V_o(t) = E + V(t).$$

The time depending current $t \mapsto i(t)$ *is given by*

$$i(t) = \frac{1}{R}\max\{0, u(t) - E\} \tag{93}$$

and thus

$$V_o(t) = V(t) + E = u(t) - Ri(t) = u(t) + \min\{0, E - u(t)\} = \min\{u(t), E\}. \tag{94}$$

This shows that the circuit in figure 9 can be used to transmit the part of a given input-signal u *which lies below some given reference level* E*.*

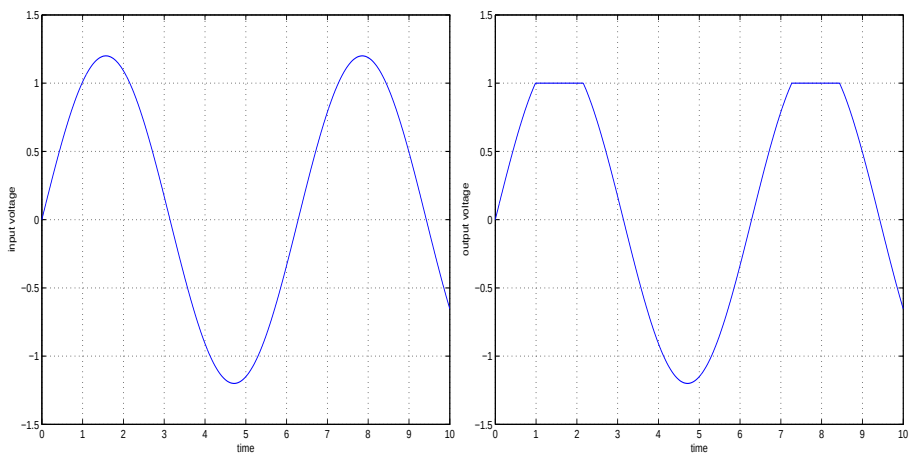

Figure 10: Clipping circuit 1: Ideal diode as shunt element, $E = 1$

Example 10 (Clipping circuit 1 / General diode) *In the case of a diode with electrical superpotential φ, we may follow the same steps as above to get:*

$$i(t) = (id_{\mathbb{R}} + \partial\varphi)^{-1}(\frac{u(t) - E}{R}) = \text{argmin}_{x\in\mathbb{R}}\{\frac{1}{2}|x - (\frac{u(t) - E}{R})|^2 + \varphi(x)\}. \tag{95}$$

and

$$V_o(t) = u(t) - Ri(t). \tag{96}$$

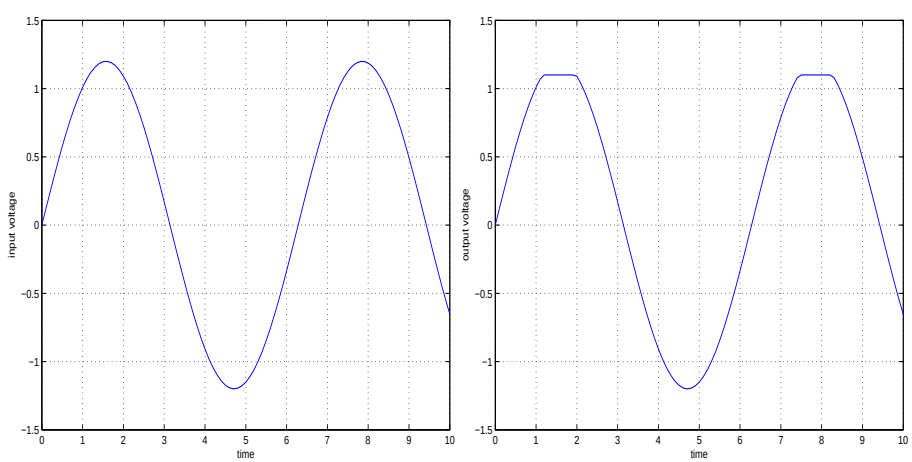

Figure 11: Clipping circuit 1: General diode as shunt element using, $V_1 = 0.1, V_2 = -90$, $E = 1$

Example 11 (Clipping circuit 2 / Ideal diode) *Let us consider the circuit of figure 12.*

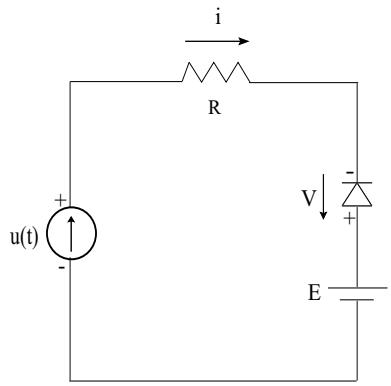

Figure 12: Clipping circuit 2: Diode as shunt element

Here we have

$$u = U_R - V + E$$

with $U_R = Ri$ *and* $V \in \partial\Psi_{\mathbb{R}_+}(-i)$*. Thus*

$$E + Ri - u \in \partial\Psi_{\mathbb{R}_+}(-i) = -\partial\Psi_{\mathbb{R}_-}(i) \tag{97}$$

which is equivalent to $\mathbf{VI}(\mathbf{R}, \mathbf{E} - \mathbf{u}, \mathbf{\Psi}_{\mathbb{R}_-})$*, i.e.*

$$i \in \mathbb{R}_- : (Ri + E - u)(v - i) \geq 0, \forall v \in \mathbb{R}_-.$$

Here $R > 0$ *and for each* $E, u \in \mathbb{R}$*, we may apply Corollary 1 to assert that (97) has a unique solution. Moreover:*

$$(97) \Longleftrightarrow \frac{E}{R} + i - \frac{u}{R} \in -\partial\Psi_{\mathbb{R}_-}(i) \Longleftrightarrow -\frac{E}{R} + \frac{u}{R} \in i + \partial\Psi_{\mathbb{R}_-}(i)$$

$$\Longleftrightarrow i = (id_{\mathbb{R}} + \partial\Psi_{\mathbb{R}_-})^{-1}(\frac{u - E}{R}) = \frac{1}{R}\min\{0, u - E\}.$$

If $u < E$ *then the diode is conducting while if* $u \geq E$ *then the diode is blocking. For a driven time depending input* $t \mapsto u(t)$ *the time depending current* $t \mapsto i(t)$ *is given by*

$$i(t) = \frac{1}{R}\min\{0, u(t) - E\}. \tag{98}$$

and the output-signal $t \mapsto V_o(t) = V(t) + E$ *is*

$$V_o(t) = \max\{u(t), E\} \tag{99}$$

and thus the circuit in figure 12 can be used to transmit the part of a given input-signal u *which lies above some given reference level* E*.*

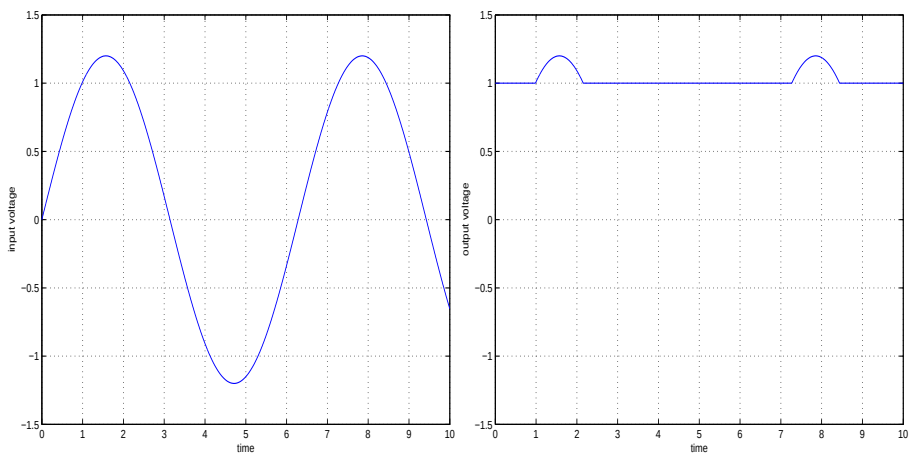

Figure 13: Clipping circuit 2: Ideal diode as shunt element

Example 12 (Clipping circuit 2 / General diode) *In the case of a general diode with superpotential φ, we set:*

$$\bar{\varphi}(x) = \varphi(-x), \quad (x \in \mathbb{R}).$$

Suppose there exists a point $y_0 = -x_0$ at which φ is finite and continuous. Note that this is the case for each model discussed in Section 4. Then:

$$\partial\bar{\varphi}(x) = -\partial\varphi(-x), \quad (x \in \mathbb{R}).$$

Thus

$$E + Ri - u \in \partial\varphi(-i) = -\partial\bar{\varphi}(i) \Longleftrightarrow -\frac{E}{R} + \frac{u}{R} \in i + \partial\bar{\varphi}(i)$$

$$\Longleftrightarrow i = (id_{\mathbb{R}} + \partial\bar{\varphi})^{-1}\left(\frac{u-E}{R}\right) = \mathrm{argmin}_{x\in\mathbb{R}}\{\frac{1}{2}|x - \left(\frac{u-E}{R}\right)|^2 + \bar{\varphi}(x)\}$$

$$= \mathrm{argmin}_{x\in\mathbb{R}}\{\frac{1}{2}|x - \left(\frac{u-E}{R}\right)|^2 + \varphi(-x)\}.$$

For a driven time depending input $t \mapsto u(t)$ the time depending current $t \mapsto i(t)$ is given by

$$i(t) = \mathrm{argmin}_{x\in\mathbb{R}}\{\frac{1}{2}|x - \left(\frac{u(t)-E}{R}\right)|^2 + \varphi(-x)\}. \tag{100}$$

and the output-signal $t \mapsto V_o(t) = V(t) + E$ can be computed by the formula

$$V_o(t) = u(t) - Ri(t). \tag{101}$$

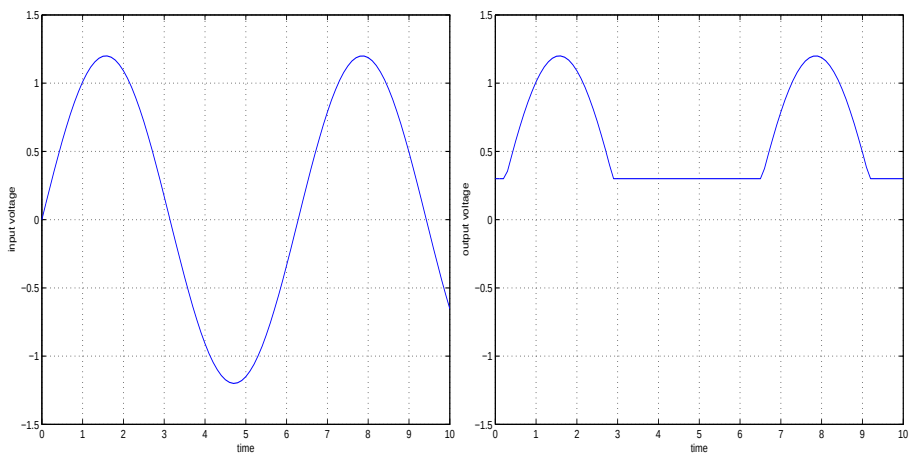

Figure 14: Clipping circuit 2: practical diode as shunt element, $V_1 = 0.2, V_2 = -90, E = 0.5$

Let us now discuss two circuits, a double-diode clipper and a sampling gate, to illustrate the results established in Proposition 7 and Corollary 4.

Example 13 (Double-diode clipper / Ideal diode) *Let us consider the circuit in Figure 15 involving a load resistance $R > 0$, two ideal diodes, an input-signal source and two supply voltages E_1 and E_2. It is assumed that $E_1 < E_2$. We denote by i the current through the resistor R and we set $i = i_1 + i_2$ where $-i_1$ denotes the current through diode D_1 and i_2 is the current through diode D_2.*

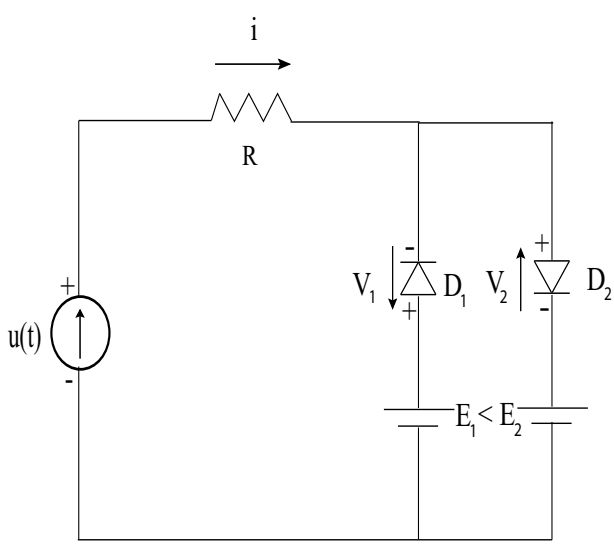

Figure 15: Double-diode clipper

Using Kirchoff's voltage laws, we get the system:

$$\begin{cases} E_1 + R(i_1 + i_2) - u = +V_1 \\ E_2 + R(i_1 + i_2) - u = -V_2 \end{cases} \tag{102}$$

where $V_1 \in \partial\Psi_{\mathbb{R}_+}(-i_1) = -\Psi_{\mathbb{R}_-}(i_1)$ is the difference of potential across diode D_1 and $V_2 \in \partial\Psi_{\mathbb{R}_+}(i_2)$ is the difference of potential across diode D_2.

Setting $\Phi \equiv \Psi_{\mathbb{R}_- \times \mathbb{R}_+}$ and

$$M = \begin{pmatrix} R & R \\ R & R \end{pmatrix}, \quad q = \begin{pmatrix} E_1 - u \\ E_2 - u \end{pmatrix}, \quad \Upsilon = \begin{pmatrix} i_1 \\ i_2 \end{pmatrix}, \tag{103}$$

we see that the system in (102) is equivalent to the variational inequality $\mathbf{VI}(\mathbf{M}, \mathbf{q}, \mathbf{\Phi})$, i.e.

$$\Upsilon \in \mathbb{R}^2 : \ \langle M\Upsilon + q, v - \Upsilon \rangle + \Phi(v) - \Phi(\Upsilon) \geq 0, \forall v \in \mathbb{R}^2. \tag{104}$$

Here the matrix M is positive semidefinite and symmetric, $D(\Phi)_\infty = \mathbb{R}_- \times \mathbb{R}_+$, $\ker\{M\} = \{v \in \mathbb{R}^2 : v_2 = -v_1\}$ and $\mathcal{K}(M, \Phi) = \{v \in \mathbb{R}^2 : v_2 = -v_1\}$. Thus

$$D(\Phi)_\infty \cap \ker\{M\} \cap \mathcal{K}(M, \Phi) = \{v \in \mathbb{R}^2 : v_1 \leq 0, v_2 = -v_1\}.$$

Then, for all $v \in D(\Phi)_\infty \cap \ker\{M\} \cap \mathcal{K}(M, \Phi)$, $v \neq 0$, we have $-v_1 = v_2 > 0$ and thus

$$\langle q, v \rangle = (E_1 - u)v_1 + (E_2 - u)v_2 = v_2(E_2 - E_1) > 0. \tag{105}$$

We may apply Corollary 4 which ensures that the system in (104) has at least one solution.

Using the first relation in part (c) of Corollary 4 we first remark that if Υ and $\bar{\Upsilon}$ denote two solutions of (102) then $\Upsilon - \bar{\Upsilon} \in ker\{M\}$ and thus $i_1 - \bar{i}_1 = -(i_2 - \bar{i}_2)$, i.e.

$$i_1 + i_2 = \bar{i}_1 + \bar{i}_2. \tag{106}$$

It results that if $\Upsilon^* = (i_1^* \ i_2^*)^T$ denotes a solution of the system in (104) then the current through the resistor R, i.e. $i^* = i_1^* + i_2^*$ is uniquely determined.

Using now the second relation of part (c) of Corollary 4, we obtain also that:

$$(E_1 - u)i_1 + (E_2 - u)i_2 = (E_1 - u)\bar{i}_1 + (E_2 - u)\bar{i}_2. \tag{107}$$

Here $E_2 \neq E_1$ and thus the system in (106)-(107) yields $i_1 = \bar{i}_1$ and $i_2 = \bar{i}_2$. The solution of (104) is thus unique.

Using the relations in (102) we see that :

$$i_1^* + i_2^* = \min\{i_2^*, \frac{u - E_1}{R}\} = \max\{i_1^*, \frac{u - E_2}{R}\}$$

from which we deduce, after elementary calculations, that:

$$i^* = \begin{cases} \frac{u - E_1}{R} & \text{if} \ \ u < E_1 \\ 0 \ \text{ if} \ \ E_1 \leq u \leq E_2 \\ \frac{u - E_2}{R} & \text{if} \ \ u > E_2 \end{cases}.$$

So, for a driven time depending input $t \mapsto u(t)$ the time depending current $t \mapsto i^*(t)$ through the resistor R is given by

$$i^*(t) = \begin{cases} \frac{u(t) - E_1}{R} & \text{if} \ \ u(t) < E_1 \\ 0 \ \text{ if} \ \ E_1 \leq u(t) \leq E_2 \\ \frac{u(t) - E_2}{R} & \text{if} \ \ u(t) > E_2 \end{cases} \tag{108}$$

and the output-signal $t \mapsto V_o(t)$ *defined by*

$$V_o(t) = V_2(t) + E_2 = u(t) - Ri^*(t)$$

is then given by the expression:

$$V_o(t) = \begin{cases} E_1 \ \text{ if } \ u(t) < E_1 \\ \\ u(t) \ \text{ if } \ E_1 \leq u(t) \leq E_2 \\ \\ E_2 \ \text{ if } \ u(t) > E_2 \end{cases} . \tag{109}$$

This shows that the circuit can be used to transmit the part of a given input-signal u *that lies above some level* E_1 *and below some level* E_2*.*

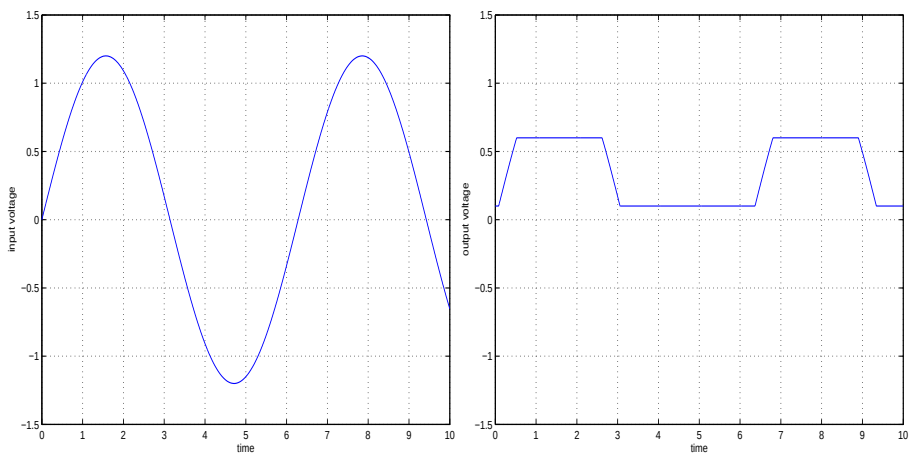

Figure 16: Double-diode clipper: ideal diode, $E_1 = 0.1, E_2 = 0.6$

Example 14 (Double-diode clipper / Practical diode) *Let us again consider the circuit in Figure 15 and suppose that the electrical superpotential of each diodes* D_1 *and* D_2 *is given by (practical diode model):*

$$\varphi_{PD}(x) = \begin{cases} \nu_1 x \ \ \textit{if} \ \ x \geq 0 \\ \\ \nu_2 x \ \ \textit{if} \ \ x < 0 \end{cases} , \quad (x \in \mathbb{R})$$

where $\nu_2 < 0 < \nu_1$*. We suppose also that*

$$\mid \nu_2 \mid > \frac{E_2 - E_1}{2}. \tag{110}$$

We set

$$\bar{\varphi}_{PD}(x) = \varphi_{PD}(-x), \ \ \forall \, x \in \mathbb{R}$$

and

$$\Phi(x) = \bar{\varphi}_{PD}(x_1) + \varphi_{PD}(x_2), \ \ \forall \, (x_1, x_2) \in \mathbb{R}^2. \tag{111}$$

Kirchoff's laws yield the system

$$\begin{cases} E_1 + R(i_1 + i_2) - u = +V_1 \in -\partial\bar{\varphi}_{PD}(i_1) \\ \\ E_2 + R(i_1 + i_2) - u = -V_2 \in -\partial\varphi_{PD}(i_2) \end{cases} \tag{112}$$

which is equivalent to the variational inequality $\mathbf{VI}(\mathbf{M}, \mathbf{q}, \mathbf{\Phi})$*, i.e.*

$$\Upsilon \in \mathbb{R}^2 : \ \langle M\Upsilon + q, v - \Upsilon\rangle + \Phi(v) - \Phi(\Upsilon) \geq 0, \forall v \in \mathbb{R}^2, \tag{113}$$

with M *and* q *as in (103) and* Φ *as in (111). Here* $D(\Phi)_\infty = \mathbb{R}^2$*,* $\Phi_\infty \equiv \Phi$*,* $\mathcal{N}(M, \Phi) = \ker\{M\}$ *and thus*

$$D(\Phi)_\infty \cap \ker\{M\} \cap \mathcal{N}(M, \Phi) = \ker\{M\} = \{v \in \mathbb{R}^2 : v_2 = -v_1\}.$$

Let $v \in \ker\{M\}$*,* $v \neq 0$*, be given. Then:*

$$\langle q, v\rangle + \Phi_\infty(v) = v_2(E_2 - E_1) + \varphi_{PD}(-v_1) + \varphi_{PD}(v_2) = v_2(E_2 - E_1) + 2\varphi_{PD}(v_2).$$

It results that if $v_2 > 0$ *then*

$$\langle q, v\rangle + \Phi_\infty(v) = v_2(E_2 - E_1) + 2\nu_1 v_2 > 0$$

while if $v_2 < 0$ *then*

$$\langle q, v\rangle + \Phi_\infty(v) = -v_2(2 \mid \nu_2 \mid -(E_2 - E_1)) > 0.$$

We may then apply Corollary 4 which ensures that the system in (113) has at least one solution.

If $\Upsilon^* = (i_1^* \ i_2^*)^T$ *denotes a solution of the system in (113) then from the first relation in part c) of Corollary 4, we deduce that the current* $i^* = i_1^* + i_2^*$ *through the resistor* R *is uniquely determined.*

Moreover, the function Φ *is strictly convex and part e) of Corollary 4 ensures that the solution* Υ^* *is unique and given by:*

$$\Upsilon^* = \ \mathrm{argmin}_{x\in\mathbb{R}^2}\{\frac{1}{2}\langle Mx, x\rangle + \langle q, x\rangle + \Phi(x)\}. \tag{114}$$

So, for a driven time depending input $t \mapsto u(t)$ *the time depending current* $t \mapsto i^*(t)$ *through the resistor* R *is given by*

$$i^*(t) = i_1^*(t) + i_2^*(t) \tag{115}$$

where

$$\begin{pmatrix} i_1^*(t) & i_2^*(t) \end{pmatrix}^T = \ \mathrm{argmin}_{x\in\mathbb{R}^2}\{\frac{1}{2}\langle Mx, x\rangle + (E_1 - u(t))x_1 + (E_2 - u(t))x_2 + \Phi(x)\} \tag{116}$$

and the output-signal V_o *can then be determined by the formula:*

$$V_o(t) = u(t) - Ri^*(t).$$

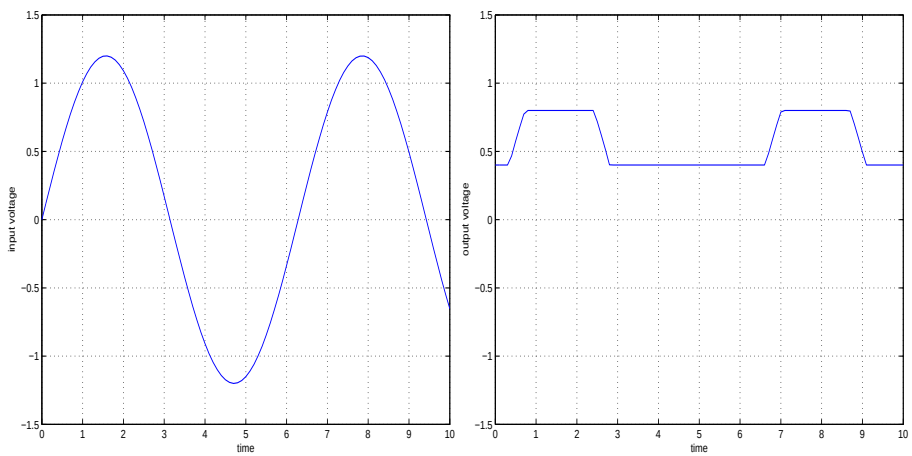

Figure 17: Double-diode clipper: practical diode

Example 15 (Sampling gate) *A sampling gate is a circuit in which the output is a reproduction of the input waveform during a selected time interval and is zero otherwise. The time interval is selected by the gate signal V_c. The circuit in Figure 18 is a sampling gate involving a bridge of four diodes D_1, D_2, D_3, D_4 and symmetrically controlled by gate voltages $+V_c$ and $-V_c$ through the control resistors $R_c > 0$. The input-signal is given by V_i and the output signal is defined by the voltage V_o through the load resistor $R_L > 0$. Usually, V_i is sinusoidal while V_c is rectangular shaped.*

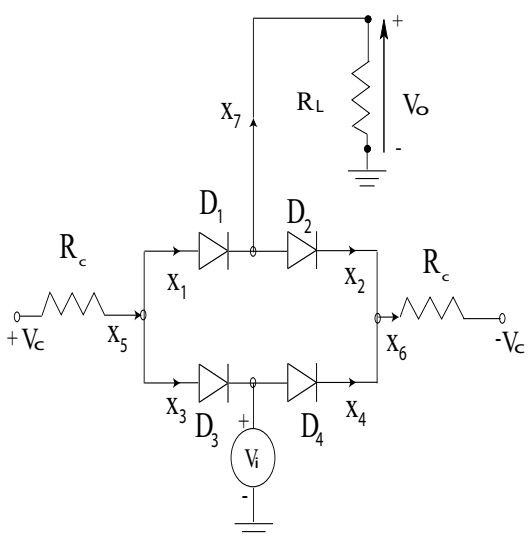

Figure 18: four-diode-bridge sampling gate

We denote by V_j the voltage of the diode D_j and by x_i the current across the diode D_j $(1 \leq j \leq 4)$. Moreover, x_5 denotes the current through the left resistor R_c, x_6 is the current through the right resistor R_c and x_7 denotes the current trough resistor R_L. Kirchoff's laws yield

$$V_i - V_4 + V_2 - R_L x_7 = 0$$

$$2V_c - V_3 - V_4 - R_c x_6 - R_c x_5 = 0$$

$$-V_1 - V_2 + V_3 + V_4 = 0.$$

Moreover $x_1 + x_3 = x_2 + x_4 = x_5 = x_6$ *and* $x_1 - x_2 = x_4 - x_3 = x_7$. *Thus*

$$\overbrace{\begin{pmatrix} -R_L & 0 & 0 \\ 0 & -2R_c & 0 \\ 0 & 0 & 0 \end{pmatrix}}^{A} \overbrace{\begin{pmatrix} x_7 \\ x_6 \\ x_1 \end{pmatrix}}^{x} - \overbrace{\begin{pmatrix} 0 & -1 & 0 & 1 \\ 0 & 0 & 1 & 1 \\ 1 & 1 & -1 & -1 \end{pmatrix}}^{B} \overbrace{\begin{pmatrix} V_1 \\ V_2 \\ V_3 \\ V_4 \end{pmatrix}}^{V} + \overbrace{\begin{pmatrix} 1 & 0 \\ 0 & 1 \\ 0 & 0 \end{pmatrix}}^{D} \overbrace{\begin{pmatrix} V_i \\ 2V_c \end{pmatrix}}^{u} = 0,$$

and

$$\begin{cases} V_1 \in \partial\psi_{\mathbb{R}_+}(x_1) \\ V_2 \in \partial\psi_{\mathbb{R}_+}(x_2) = \partial\psi_{\mathbb{R}_+}(x_1 - x_7) \\ V_3 \in \partial\psi_{\mathbb{R}_+}(x_3) = \partial\psi_{\mathbb{R}_+}(x_6 - x_1) \\ V_4 \in \partial\psi_{\mathbb{R}_+}(x_4) = \partial\psi_{\mathbb{R}_+}(x_7 + x_6 - x_1) \end{cases} \tag{117}$$

Setting

$$y = \overbrace{\begin{pmatrix} 0 & 0 & 1 \\ -1 & 0 & 1 \\ 0 & 1 & -1 \\ 1 & 1 & -1 \end{pmatrix}}^{C} \begin{pmatrix} x_7 \\ x_6 \\ x_1 \end{pmatrix}$$

and defining the function $\Xi \equiv \Psi_{(\mathbb{R}_+)^4}$, *we may write the relations in (117) equivalently as:*

$$V \in \partial\Xi(y)$$

and we may then consider problem $\mathbf{NRM}(\mathbf{A}, \mathbf{B}, \mathbf{C}, \mathbf{D}, \mathbf{u}, \mathbf{\Xi})$.

Let us first check that the assumptions of Proposition 7 are satisfied. Indeed, it is clear that Assumption $(H1)$ *holds. Moreover* $\begin{pmatrix} 2 & 1 & 1 & 2 \end{pmatrix} = C \begin{pmatrix} 1 & 3 & 2 \end{pmatrix} \in \operatorname{int}\{K\}$ *is a point at which* Ξ *is finite and continuous and Assumption* $(H2)$ *is thus satisfied. Finally, we remark that* $C^T = B$ *and thus Assumption* $(H3)$ *holds with* $P = I$.

As a consequence of Proposition 7, problem $\mathbf{NRM}(\mathbf{A}, \mathbf{B}, \mathbf{C}, \mathbf{D}, \mathbf{u}, \mathbf{\Xi})$ *can be studied via the problem* $\mathbf{VI}(-\mathbf{A}, -\mathbf{Du}, \mathbf{\Phi})$ *where* $\Phi = \Xi \circ C$. *Here* $-A$ *is symmetric and positive semi-definite. Moreover* $D(\Phi)_\infty = D(\Phi_\infty) = \{x \in \mathbb{R}^3 : Cx \in (\mathbb{R}_+)^4\}$ *and* $\ker\{-A\} = \{\begin{pmatrix} 0 & 0 & \alpha \end{pmatrix}^T ;\ \alpha \in \mathbb{R}\}$. *It is then easy to see that*

$$\ker\{-A\} \cap D(\Phi)_\infty \cap \mathcal{K}(-A, \Phi)\} = \{0\}.$$

It results from Corollary 4 that the system in $\mathbf{NRM}(\mathbf{A}, \mathbf{B}, \mathbf{C}, \mathbf{D}, \mathbf{u}, \mathbf{\Xi})$ *has a at least one solution* x^*. *The matrix A is symmetric and thus:*

$$-\frac{1}{2}\langle Ax^*, x^*\rangle - \langle Du, x^*\rangle \leq -\frac{1}{2}\langle Ax, x\rangle - \langle Du, x\rangle,\ \forall x \in \mathbb{R}^3 : Cx \in (\mathbb{R}_+)^4. \tag{118}$$

Moreover, if $\bar{x}$ denotes another solution, then using part c) in Corollary 4:

$$\begin{pmatrix} x_7^* - \bar{x}_7 \\ x_6^* - \bar{x}_6 \\ x_1^* - \bar{x}_1 \end{pmatrix} = \begin{pmatrix} 0 \\ 0 \\ \alpha \end{pmatrix}$$

for some $\alpha \in \mathbb{R}$. It results that $x_7^* = \bar{x}_7$ and $x_6^* = \bar{x}_6$, i.e. the current through the resistor R and the current through the resistor R_c are uniquely determined.

So, for a driven time depending input $t \mapsto V_s(t)$ and control gate signals $t \mapsto V_c(t)$ and $t \mapsto -V_c(t)$, the output time depending voltage $t \mapsto V_o(t)$ through the resistor R_L is uniquely determined by:

$$V_o(t) = R_L x_7(t)$$

where the current function $t \mapsto x_7(t)$ is uniquely determined in solving the variational inequality $\mathbf{VI}(-\mathbf{A}, -\mathbf{Du}(\mathbf{t}), \mathbf{\Phi})$.

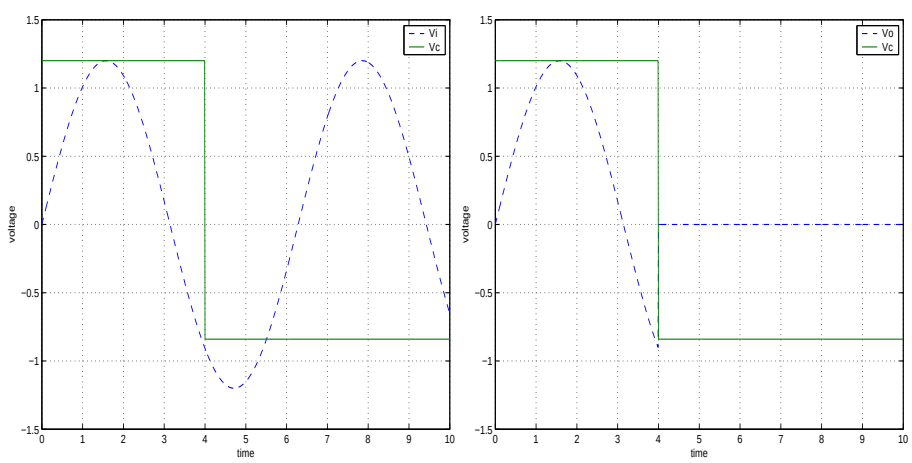

Figure 19: four-diode-bridge sampling gate

The previous examples show that the place filled by the class of symmetric and positive semidefinite matrices is as important in Electronics as it is in Mechanics. However, the mathematical formulation of circuits involving devices like operational amplifiers involves matrices that are neither symmetric nor positive semidefinite. The following example constitutes a nice illustration of Theorem 3.

Example 16 (Operational amplifier) *An operational amplifier is a great versatile circuit element based on transistors which is used to design audio equipments, oscillators and waveform generators, filters and many other applications. Let us consider the system of Figure 20 involving an ideal Zener diode D and a non-inverting amplifier circuit with resistors $R_1 > 0$ and $R_2 > 0$. We denote by $R_i > 0$ the input resistor, R_o the output resistor and $\gamma > 0$ the differential gain of the operational amplifier. Note that R_i is very large (a few MΩ) while R_o is very small (a few Ω). The differential gain γ is very large ($\simeq 100000$).*

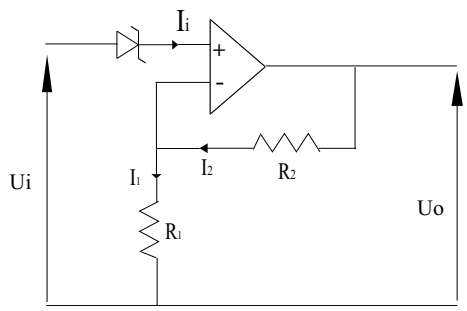

Figure 20: Zener diode + Operational amplifier

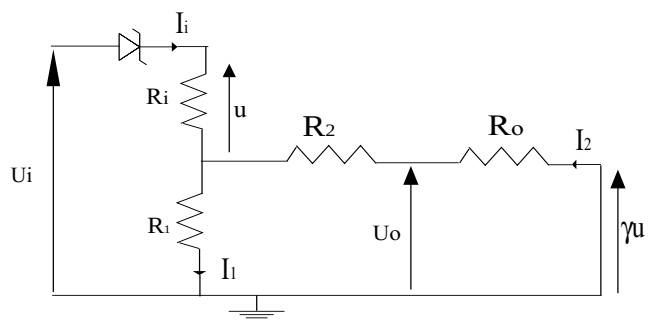

Figure 21: Small signals model

Considering as in Figure 21 a small signals model for the operational amplifier, Kirchoff's laws give:

$$\begin{cases} I_i - I_1 + I_2 = 0, \\ R_i I_i + R_1 I_1 - U_i + V_D = 0, \\ -\gamma R_i I_i + R_1 I_1 + (R_2 + R_0) I_2 = 0. \end{cases}$$

with currents I_i, I_1, I_2 and voltages V_D, U_i as defined in Figure 21. Therefore:

$$\overbrace{\begin{pmatrix} 1 & -1 & 1 \\ R_i & R_1 & 0 \\ -\gamma R_i & R_1 & (R_2+R_o) \end{pmatrix}}^{A}\overbrace{\begin{pmatrix} I_i \\ I_1 \\ I_2 \end{pmatrix}}^{\Upsilon} - \overbrace{\begin{pmatrix} 0 \\ -1 \\ 0 \end{pmatrix}}^{B} V_D + \overbrace{\begin{pmatrix} 0 \\ -1 \\ 0 \end{pmatrix}}^{D} U_i = 0,$$

and

$$V_D \in \partial\varphi_{ZD}(I_i) \tag{119}$$

where φ_{ZD} denotes the electrical superpotential of the Zener diode, i.e.

$$\varphi_{ZD}(x) = \begin{cases} V_1 x \ \text{ if } \ x \geq 0 \\ V_2 x \ \text{ if } \ x < 0 \end{cases}, \quad (x \in \mathbb{R}),$$

with $V_2 < 0 < V_1$. Setting

$$y = \overbrace{\begin{pmatrix} 1 & 0 & 0 \end{pmatrix}}^{C} \begin{pmatrix} I_i \\ I_1 \\ I_2 \end{pmatrix},$$

we may write the relation in (119) equivalently as:

$$V \in \partial\varphi_{ZD}(y)$$

and we may consider the problem $\mathbf{NRM}(\mathbf{A}, \mathbf{B}, \mathbf{C}, \mathbf{D}, \mathbf{U_i}, \varphi_{\mathbf{ZD}})$.

We check that the assumptions of Proposition 7 are satisfied. Indeed, Assumptions $(H1)$ and $(H2)$ are satisfied since φ_{ZD} is convex and continuous on $\mathbb{R}^3$. Assumption $(H3)$ holds with

$$P = \begin{pmatrix} 0 & -1 & 0 \\ 0 & 0 & -1 \\ -1 & 0 & 0 \end{pmatrix}.$$

As a consequence of Proposition 7, problem $\mathbf{NRM}(\mathbf{A}, \mathbf{B}, \mathbf{C}, \mathbf{D}, \mathbf{U_i}, \varphi_{\mathbf{ZD}})$ can be studied via the problem $\mathbf{VI}(-\mathbf{PA}, -\mathbf{PDU_i}, \mathbf{\Phi}$ where

$$\Phi(x) = \varphi_{ZD}(Cx) = \varphi_{ZD}(x_1), \ \forall x \in \mathbb{R}^3.$$

Here we have:

$$-PA = \begin{pmatrix} R_i & R_1 & 0 \\ -\gamma R_i & R_i & (R_2+R_0) \\ 1 & -1 & 1 \end{pmatrix}.$$

The matrix $-PA$ is a P-matrix and $\Phi \in D\Gamma(\mathbb{R}^3; \mathbb{R}\cup\{+\infty\})$ (with $\Phi_1 \equiv \Phi, \Phi_2 \equiv \Phi_3 \equiv 0$). We may thus apply Theorem 3 to ensure that the system in $\mathbf{NRM}(\mathbf{A}, \mathbf{B}, \mathbf{C}, \mathbf{D}, \mathbf{U_i}, \varphi_{\mathbf{ZD}})$ has a unique solution.

Thus, for a driven time depending input $t \mapsto U_i(t)$ the output time depending voltage $t \mapsto U_o(t)$ defined by (see Figure 20):

$$U_o(t) = \gamma R_i I_i(t) - R_o I_2(t)$$

is uniquely defined with the current functions $t \mapsto I_i(t)$ and $t \mapsto I_2(t)$ that are uniquely determined in solving $\mathbf{VI}(-\mathbf{PA}, -\mathbf{PDU_i(t)}, \mathbf{\Phi_1})$.

In the next example we analyse the stationary solutions of a bridge rectifier. This application constitutes an example that does not fit within this class of generalized equations in (81)–(83). Here the unknown in (16) is not x but y_L (see (81)–(83)).

Example 17 (Four-diode bridge full-wave rectifier) *Let us consider the circuit in figure 22 involving four diodes D_1, D_2, D_3 and D_4, a resistor $R > 0$ and a capacitor $C > 0$. We denote by $\varphi_{D_i} \in \Gamma(\mathbb{R}; \mathbb{R} \cup \{+\infty\})$ $(1 \leq i \leq 4)$ the electrical superpotential of diode D_i.*

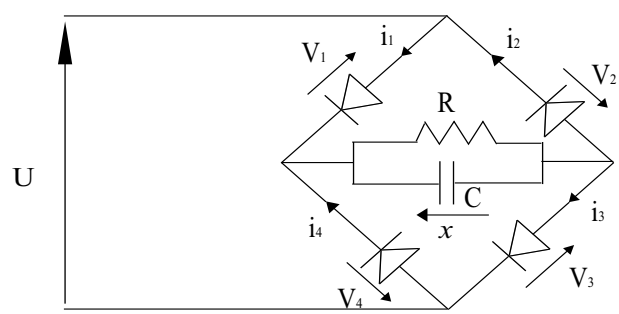

Figure 22: Four-diode bridge

Let us denote by V_i the voltage of diode D_i $(1 \leq i \leq 4)$, x the voltage of the capacitor and use the other notation indicated on Figure 22. Kirchoff's laws yield the system:

$$\begin{cases} i_1 + i_4 = \frac{x}{R} + C\frac{dx}{dt} \\ -V_4 = x + V_3 \\ i_3 = i_4 + i_1 - i_2 \\ -V_1 = x + V_3 - u \\ -V_2 = -V_3 + u. \end{cases}$$

We have

$$-V_4 \in -\partial\varphi_{D_4}(i_4), -V_1 \in -\partial\varphi_{D_1}(i_1), -V_2 \in -\partial\varphi_{D_2}(i_2).$$

Moreover

$$V_3 \in \partial\varphi_{D_1}(i_3) \Leftrightarrow i_3 \in \partial\varphi^*_{D_3}(V_3).$$

We set

$$\theta_{D_3}(x) = \varphi^*_{D_3}(-x), \forall x \in \mathbb{R},$$

and we assume the existence of a point $x_0 \in \mathbb{R}$ at which θ_{D_3} is finite and continuous. Then

$$\partial\theta_{D_3}(x) = -\partial\varphi^*_{D_3}(-x), \forall x \in \mathbb{R}\,.$$

Therefore

$$V_3 \in \partial\varphi_{D_1}(i_3) \Leftrightarrow i_3 \in -\partial\theta_{D_3}(-V_3).$$

We set

$$\Phi(x) = \varphi_{D_4}(x_1) + \theta_{D_3}(x_2) + \varphi_{D_1}(x_3) + \varphi_{D_2}(x_4),\ \forall x \in \mathbb{R}^4\,.$$

It results that the dynamical behavior of the circuit in Figure 22 are described by the system:

$$\frac{dx}{dt} = \frac{-1}{RC}x + \overbrace{\begin{pmatrix} \frac{1}{C} & 0 & \frac{1}{C} & 0 \end{pmatrix}}^{B} \begin{pmatrix} i_4 \\ -V_3 \\ i_1 \\ i_2 \end{pmatrix}, \tag{120}$$

$$\overbrace{\begin{pmatrix} -V_4 \\ i_3 \\ -V_1 \\ -V_2 \end{pmatrix}}^{y} = \overbrace{\begin{pmatrix} 1 \\ 0 \\ 1 \\ 0 \end{pmatrix}}^{C} x + \overbrace{\begin{pmatrix} 0 & -1 & 0 & 0 \\ 1 & 0 & 1 & -1 \\ 0 & -1 & 0 & 0 \\ 0 & 1 & 0 & 0 \end{pmatrix}}^{N} \overbrace{\begin{pmatrix} i_4 \\ -V_3 \\ i_1 \\ i_2 \end{pmatrix}}^{y_L} + \overbrace{\begin{pmatrix} 0 \\ 0 \\ -1 \\ 1 \end{pmatrix}}^{F} u \tag{121}$$

and

$$y \in -\Phi(y_L). \tag{122}$$

Assuming that u remains constant, i.e. $u(.) \equiv u$, the stationary solutions (or fixed points) of (120)-(122) satisfy the problem:

$$\begin{cases} -ax + By_L = 0 \\ \\ \langle Ny_L + Cx + Fu, v - y_L \rangle + \Phi(v) - \Phi(y_L) \geq 0, \ \ \forall\, v \in \mathbb{R}^4, \end{cases} \tag{123}$$

with $a := \frac{1}{RC} > 0$.
From the first equation of (123) one deduces that $x = \frac{1}{a} By_L$, so that $y = (N + \frac{1}{a}CB)y_L + Fu$ and our problem reduces to problem $\mathbf{VI}((\mathbf{N} + \frac{\mathbf{1}}{\mathbf{a}}\mathbf{CB}), \mathbf{\Phi}, \mathbf{Fu})$, i.e:

$$\langle (N + \frac{1}{a}CB)y_L + Fu, v - y_L \rangle + \Phi(v) - \Phi(y_L) \geq 0, \ \ \forall\, v \in \mathbb{R}^4. \tag{124}$$

The matrix $N \in \mathbb{R}^{4\times 4}$ is skew-symmetric and the matrix

$$M := N + \frac{1}{a}CB = \begin{pmatrix} R & -1 & R & 0 \\ 1 & 0 & 1 & -1 \\ R & -1 & R & 0 \\ 0 & 1 & 0 & 0 \end{pmatrix}$$

has rank 3 and is positive semidefinite since

$$\langle x, Mx \rangle = \frac{1}{a}\langle x, CBx \rangle = R(x_1 + x_3)^2, \ \forall x \in \mathbb{R}^4 \,.$$

Case 1. *Suppose that all diodes are ideal, i.e.*

$$\varphi_{D_i}(x) = \Psi_{\mathbb{R}_+}(x), \forall x \in \mathbb{R} \ (1 \leq i \leq 4).$$

Then $\Phi \equiv \Psi_{(\mathbb{R}_+)^4}$, $D(\Phi)_\infty = (\mathbb{R}_+)^4$ and clearly

$$D(\Phi)_\infty \cap \ker\{M + M^T\} \cap K(M, \Phi) = \{0\}.$$

Indeed, $x \in \ker\{M + M^T\}$ yields $x_1 = -x_3$ and thus $x_1 = x_3 = 0$ since $x \in (\mathbb{R}_+)^4$. Using then $x \in \mathcal{K}(M, \Phi)$, we get also $-x_2 \geq 0$ and $-x_4 \geq 0$ and thus $x_2 = x_4 = 0$ since $x \in (\mathbb{R}_+)^4$. It results from Corollary 2 that for each $u \in \mathbb{R}$, problem $\mathbf{VI}((\mathbf{N} + \frac{\mathbf{1}}{\mathbf{a}}\mathbf{CB}), \mathbf{\Phi}, \mathbf{Fu})$ has at least one solution.

Case 2. *Suppose that diodes D_1 and D_4 are ideal and consider for diodes D_2 and D_3 the practical model with electrical superpotential*

$$\varphi(x) = \begin{cases} V_1 x \ \ \textit{if} \ \ x \geq 0 \\ \\ V_2 x \ \ \textit{if} \ \ x < 0 \end{cases}, \ \ (x \in \mathbb{R}),$$

with $V_2 < 0 < V_1$. Here

$$\Phi(x) = \Psi_{\mathbb{R}_+}(x_1) + \varphi^*(-x_2) + \Psi_{\mathbb{R}_+}(x_3) + \varphi(x_4), \ \forall x \in \mathbb{R}^4$$

and

$$\varphi^* \equiv \Psi_{[V_2,V_1]}.$$

Thus $D(\Phi) = \mathbb{R}_+ \times [V_2, V_1] \times \mathbb{R}_+ \times \mathbb{R}$, $D(\Phi)_\infty = \mathbb{R}_+ \times \{0\} \times \mathbb{R}_+ \times \mathbb{R}$ *and* $D(\Phi_\infty) = \mathbb{R}_+ \times \{0\} \times \mathbb{R}_+ \times \mathbb{R}$. *We check that*

$$D(\Phi)_\infty \cap \ker\{M + M^T\} \cap \mathcal{K}(M, \Phi) = \{0\}.$$

Indeed, here $x_2 = 0$ *and* $x \in \ker\{M+M^T\}$ *yields* $x_1 = -x_3$ *and thus* $x_1 = x_3 = 0$ *since* $x_1 \geq 0$. *Using then* $x \in \mathcal{K}(M, \Phi)$, *we get also* $x_4 = 0$. *It results from Corollary 2 that for each* $u \in \mathbb{R}$, *problem* $\mathbf{VI}((\mathbf{N} + \frac{\mathbf{1}}{\mathbf{a}}\mathbf{CB}), \mathbf{\Phi}, \mathbf{Fu})$ *has at least one solution.*

Various cases can be so studied and this shows that studying the fixed points of an interesting class of electrical circuits can be cast into a variational inequality problem such as (16), written as: Find $y_L \in \mathbb{R}^n$ such that

$$\langle My_L + q, v - y_L\rangle + \Phi(v) - \Phi(y_L) \geq 0, \ \ \forall\, v \in \mathbb{R}^n. \tag{125}$$

6 Conclusions

In the first part of this paper, it is shown that some classical existence and uniqueness results for complementarity problems can be recovered and can be generalized to variational inequalities using recession tools from convex analysis. Various classes of matrices M are introduced which allow one to state well-posedness results for variational inequalities of the form $\langle Mu + q, v - u\rangle + \Phi(v) - \Phi(u) \geq 0$ for all $v \in \mathbb{R}^n$, thus recovering the well-known results for P-, P_0, positive definite and semi positive definite matrices in linear complementarity problems. In the second part of the paper, it is shown that the study of electrical circuits with diodes, a topic of major importance in Electrical Engineering, may benefit a lot from the results of the first part. This work also paves the way to numerical tools that may be used to determine the equilibrium points of electrical circuits with non-smooth elements and external excitation.

References

[1] Anonymous, Electro-Principles I, ETEC 1120 (http://www.technology.niagarac.on.ca").

[2] Anonymous, Electronic Devices and Circuits, Engineering Sciences 154, Diode i-v Characteristics (http://people.deas.harvard.edu).

[3] Anonymous, 10ETS.. SAFEIR Series, Bulletin 12120 rev. A 07/97, (http://www.digchip.com).

[4] Anonymous, Voltage regulator diodes, (http://www.datasheetcatalog.com/).

[5] Anonymous, Diode Basics, (http://www.powerdesigners.com/).

[6] Anonymous, Littelfuse varistors - Basic properties, Terminology and theory, Application Note AN9767.1, 1999.

[7] Acary V., Brogliato B., Goeleven D., Higher order Moreau's sweeping process: Mathematical formulation and numerical simulation, to appear in *Mathematical Programming*.

[8] Addi K., Adly S., Brogliato B. and Goeleven D., A method using the approach of Moreau and Panagiotopoulos for the mathematical formulation of non-regular circuits in electronics, to appear in *Nonlinear Analysis, Series C : Hybrid Systems and Applications*.

[9] Adly S. and Goeleven D., A Discretization Theory for a Class of Semi-coercive Unilateral Problems, *Numerische Mathematik*, **87**, (2000), 1-34.

[10] Adly S. and Goeleven D., A Stability Theory for Second-Order Nonsmooth Dynamical Systems with Applications to Friction Problems, *Journal de Mathématiques Pures et Appliquées*, **83**, (2004), 17-51.

[11] Brogliato B., Some Perspectives on the Analysis and Control of Complementarity Systems, *IEEE Transactions on Automatic Control*, **48**, (2003), 918-935.

[12] Brogliato B., Absolute Stability and the Lagrange-Dirichlet Theorem with Monotone Multivalued Mappings, *Systems and Control Letters*, **51**, (2004), 343-353.

[13] Brogliato B. and Goeleven D., The Krakovskii-LaSalle Invariance Principle for a Class of Unilateral Dynamical Systems, *Mathematics of Control, Signals and Systems*, **17**, (2005), 57-76.

[14] Brogliato B., Lozano R., Maschke B.M., Egeland O., *Dissipative Systems Analysis and Control*, Springer CCE series, London (2006).

[15] Camlibel M.K., Heemels W.P.M.H. and Schumacher H., On Linear Passive Complementarity Systems, *Eur. J. Control*, **8**, (2002), 220-237.

[16] Camlibel M.K. and Schumacher J.M., Existence and uniqueness of solutions for a class of piecewise linear dynamical systems, *Linear Algebra and its Applications*, **351-352**, (2002), 147-184.

[17] Denoyelle P. and Acary V., The Non-Smooth Approach applied to simulating Integrated Circuits and Power Electronics. Evolution of electronic circuit simulators towards fast-SPICE performance, INRIA technical report RT-0321, (2006) (http://hal.inria.fr/inria-00080839/en/).

[18] Facchinei F. and Pang J.-S., *Finite Dimensional Variational Inequalities and Complementarity Problems*, Springer Verlag, Berlin, (2003).

[19] Fichera G., Boundary Value Problems in Elasticity with Unilateral Constraints, In: *Encyclopedia of Physics* (ed. by S. Flügge), Springer Verlag, Berlin, Vol. VI a/2, (1972).

[20] Gowda M.S., Complementarity Problems over Locally Compact Cones, *SIAM Journal on Control and Optimization*, **27**, (1989), 836-841.

[21] Gowda M.S. and Seidman I., Generalized Linear Complementarity Problems, *Mathematical Programming*, **46**, (1990) 329-340.

[22] Goeleven D., Brogliato B., Stability and Instability matrices for Linear Evolution Variational Inequalities, *IEEE Transactions on Automatic Control*, **49**, (2004), 521-534.

[23] Goeleven D., On the Solvability of Linear Noncoercive Variational Inequalities in Separable Hilbert Spaces, *Journal of Optimization Theory and Applications*, 79, (1993), 493-511.

[24] Goeleven D., Stavroulakis G.E. and Panagiotopoulos P.D., Solvability Theory for a Class of Hemivariational Inequalities Involving Copositive Plus Matrices, Applications in Robotics, *Mathematical Programming*, 75, (1996), 441-465.

[25] Goeleven D., *Noncoercive Variational Problems and Related Results*, Pitman Research Notes in Mathematics Series, N°357, Longman, 1996.

[26] Goeleven D. and Gwinner J., On Semicoerciveness of a Class of Variational Inequalities, and an Application to a Friction Problem for von Karman Plates, *Mathematische Nachrichten*, 144, (2002) 89-109.

[27] Goeleven D., Motreanu D., Dumont Y. and Rochdi M., *Variational and Hemivariational Inequalities – Theory, Methods and Applications. Vol.1: Unilateral Analysis and Unilateral Mechanics*, Kluwer Academic Publishers, Boston, (2003).

[28] Goeleven D. and Motreanu D., *Variational and Hemivariational Inequalities – Theory, Methods and Applications. Vol.2: Unilateral Problems and Unilateral Mechanics*, Kluwer Academic Publishers, Boston, (2003).

[29] Goeleven D. and Motreanu D., On the Solvability of Variational Inequalities via Relaxed Complementarity Problems, *Communications in Applied Analysis*, 4, 533-546, (2000).

[30] Hiriart-Urruty J.B. and Lemaréchal C., *Fundamentals of Convex Analysis*, Springer Grundlehren Text Editions, Heidelberg, (2001).

[31] Heemels W.P.M.H. and Schumacher J.M. and Weiland S., Linear complementarity systems, *SIAM J. Applied Math.*, **60**, (2000), 1234-1269.

[32] Hu S.C. and Papageorgiou N.S., *Handbook of Set-Valued Analysis*, Kluwer Academic Publishers, Boston, (1999).

[33] Isac G., *Complementarity Problems*, Lecture Notes in Mathematics 1528, Springer Verlag, Heidelberg, 1993.

[34] Leenaerts D. and van Bokhoven W.M.G., *Piecewise Linear Modeling and Analysis*, Kluwer Academic Publishers, Norwell, MA, USA (1998).

[35] Lloyd N.G., *Degree Theory*, Cambridge Tracts in Mathematics 73, Cambridge University Press, Cambridge (1978).

[36] Millman J. and Halkias C.C., *Integrated Electronics*, McGraw-Hill Kogakusha, LTD, Sydney, (1985).

[37] Murakami Y., A Method for the Formulation and Solution of Circuits Composed of Switches and Linear RLC networks, *IEEE Transactions on Circuits and Systems-I*, **49**, (2002), 315-327.

[38] K.G. Murty, *Linear Complementarity, Linear and Nonlinear Programming*, (1997), available at http://www-personal.engin.umich.edu/∼ murty/book/LCPbook/

[39] Moreau J.J., La Notion du Surpotentiel et les Liaisons Unilatérales on Elastostatique, *C.R. Acad. Sci. Paris*, **167A**, (1968), 954-957.

[40] Moreau J.J. and Panagiotopoulos P.D. (eds) *Nonsmooth Mechanics and Applications*, CISM, Vol. 302, Springer Verlag, Wien, (1988).

[41] Panagiotopoulos P.D., *Inequality Problems in Mechanics and Applications, Convex and Nonconvex Energy Functions*, Birkhaüser, Basel, (1985).

[42] Pang J.S., *Complementarity Problems* in R. Horst and P. Pardalos, editors, Handbook in Global Optimization, Kluwer Academic Publishers, Boston, (1994).

[43] Pascali D. and Sburlan S., *Nonlinear Mappings of Monotone Type*, Sijthoff and Noordhoff International Publishers, Amsterdam, The Netherlands, (1978).

[44] Rauch J., Discontinuous semilinear differential equations and multiple valued maps, *Proc. Amer. Math. Soc.*, **64**, (1977), 277-282.

[45] Rockafellar R.T., *Convex Analysis*, Princeton Univ. Press, Princeton, (1970).

[46] Stewart D.E., Reformulations of measure differential inclusions and their closed graph property, *Journal of Differential Equations*, **175**, (2001), 108-129.

Unité de recherche INRIA Rhône-Alpes
655, avenue de l'Europe - 38334 Montbonnot Saint-Ismier (France)

Unité de recherche INRIA Futurs : Parc Club Orsay Université - ZAC des Vignes
4, rue Jacques Monod - 91893 ORSAY Cedex (France)
Unité de recherche INRIA Lorraine : LORIA, Technopôle de Nancy-Brabois - Campus scientifi que
615, rue du Jardin Botanique - BP 101 - 54602 Villers-lès-Nancy Cedex (France)
Unité de recherche INRIA Rennes : IRISA, Campus universitaire de Beaulieu - 35042 Rennes Cedex (France)
Unité de recherche INRIA Rocquencourt : Domaine de Voluceau - Rocquencourt - BP 105 - 78153 Le Chesnay Cedex (France)
Unité de recherche INRIA Sophia Antipolis : 2004, route des Lucioles - BP 93 - 06902 Sophia Antipolis Cedex (France)

Éditeur
INRIA - Domaine de Voluceau - Rocquencourt, BP 105 - 78153 Le Chesnay Cedex (France)
http://www.inria.fr
ISSN 0249-6399