HAL open science

Minimal Selectors and Fault Tolerant Networks

Omid Amini, Frédéric Giroire, Florian Huc, Stéphane Pérennes

To cite this version:

Omid Amini, Frédéric Giroire, Florian Huc, Stéphane Pérennes. Minimal Selectors and Fault Tolerant Networks. [Research Report] 2006, pp.24. inria-00082015

HAL Id: inria-00082015

https://inria.hal.science/inria-00082015v1

Submitted on 7 Jul 2006

HAL is a multi-disciplinary open access archive for the deposit and dissemination of scientific research documents, whether they are published or not. The documents may come from teaching and research institutions in France or abroad, or from public or private research centers.

L'archive ouverte pluridisciplinaire **HAL**, est destinée au dépôt et à la diffusion de documents scientifiques de niveau recherche, publiés ou non, émanant des établissements d'enseignement et de recherche français ou étrangers, des laboratoires publics ou privés.

INSTITUT NATIONAL DE RECHERCHE EN INFORMATIQUE ET EN AUTOMATIQUE

Minimal Selectors and Fault Tolerant Networks

Omid Amini — Frédéric Giroire — Florian Huc — Stéphane Pérennes

N° ????

juin 2006

Thème COM

Rapport de recherche

ISSN 0249-6399

Minimal Selectors and Fault Tolerant Networks

Omid Amini * † , Frédéric Giroire ‡ , Florian Huc * §, Stéphane Pérennes *

Thème COM — Systèmes communicants
Projets MASCOTTE

Rapport de recherche n° ???? — juin 2006 — 24 pages

Abstract: A $(p, \lambda, k)-$network is an undirected graph with $p+\lambda$ inputs, $p+k$ outputs and internal vertices of degree four. A $(p, \lambda, k)-$network is *valid* if for any choice of p inputs and p outputs, there exist p edge-disjoint paths from the inputs to the outputs. In the special case $\lambda = 0$, a $(p, \lambda, k)-$network is already known as a *selector*. We wish to determine $N(p, \lambda, k)$, the minimum number of nodes in a valid $(p, \lambda, k)-$network. For this, we present validity certificates from which derive lower bounds for $N(p, \lambda, k)$. We also provide constructions, and hence upper bounds, based on expanders. The problem is very sensitive to the order of λ and k. For instance, when λ and k are small compared to p, the question reduces to avoid certain forbidden local configurations. For larger values of λ and k, the problem is to find graphs with a good expansion property for small sets. This lead us to introduce a new parameter called *robustness*. In many cases, we provide asymptotically tight bounds for $N(p, \lambda, k)$.

Key-words: on-board networks, selectors, superselectors, fault tolerance, switching networks, routing, expanders, connectivity, disjoint paths.

* Projet Mascotte (CNRS, INRIA, UNSA), INRIA Sophia-Antipolis, 2004 route des Lucioles BP 93, 06902 Sophia-Antipolis Cedex, France
† École Polytechnique, 91120 Palaiseau
‡ Projet Algorithmes, INRIA Rocquencourt, F-78153 Le Chesnay, France
§ This author is partialy supported by Région Provence Alpes Côte d'Azur

Unité de recherche INRIA Sophia Antipolis
2004, route des Lucioles, BP 93, 06902 Sophia Antipolis Cedex (France)
Téléphone : +33 4 92 38 77 77 —Télécopie : +33 4 92 38 77 65

Les sélecteurs minimaux et les réseaux tolérant aux pannes

Résumé : Un réseau (p, λ, k) est un graphe non orienté avec $p + \lambda$ entrées, $p + k$ sorties et des noeuds internes de degré 4. Un réseau (p, λ, k) est valide si pour n'importe quel choix de p entrées et de p sorties il existe p chemins arêtes disjoints reliant les entrées aux sorties. Dans le cas particulier $\lambda = 0$, un réseau (p, λ, k) est un *sélecteur*. Notre objectif est de déterminer $N(p, \lambda, k)$: le nombre minimum de noeuds d'un réseau (p, λ, k) valide. Pour cela, on utilise une condition suffisante de validité qui nous permet d'obtenir les bornes inférieures pour $N(p, \lambda, k)$. D'autre part on propose des constructions de réseaux valides utlisant des *expandeurs*, ce qui donne les bornes suppérieures. Le problm̀e dépend très fortement des ordres de λ et k, par exemple lorsque λ et k sont petits par rapport à p, certains patterns sont interdits. Pour les valeurs plus grandes de λ et k, on peut construire un réseau (p, λ, k) valide à partir d'un graphe ayant de bonne propriété d'expension concernant les petits ensembles de sommets. Cela nous emmène à introduire un nouveau paramètre : la *robustness*. On obtient dans de nombreux cas des bornes assymptotiques exactes.

Mots-clés : réseaux embarqués, sélecteurs, supersélecteurs, tolérance aux pannes, réseaux de switchs, routage, expandeur, connectivité, chemins disjoints.

1 Introduction

Motivation. The problem is the design of efficient on-board networks in satellites (also called Traveling Wave Tube Amplifiers). The original question was asked by Alcatel Space Industry. For example, the satellites under consideration are used for TV and video transmission (like the Eutelsat or Astra series) as well as for private applications. Signals incoming in a telecommunication satellite through ports have to be routed through an on-board network to amplifiers. A first constraint is that the network is built of switches with four links. But other constraints appear. On the one hand the amplifiers may fail during satellite lifetime and cannot be repaired. On the other hand, as the satellite is rotating on itself, all the ports and amplifiers are not well oriented and hence not available. So more amplifiers and ports are needed than the number of signals which have to be routed.

One can easily construct a network fulfilling these constraints by using two selectors of any fixed degree. However, to decrease launch costs, it is crucial to minimize the network physical weight, i.e. for us, to minimize the number of switches. Since switches are also expensive to build, it is worth saving even one. Space industries are interested in designing such networks for specific values of the parameters. However the general theory is of interest by itself.

Problem. We consider here *networks*, that is graphs connecting *inputs* to *outputs* and where vertices represent the switches. We define a $(p, \lambda, k)-$*network* as a network with $p+\lambda$ inputs and $p+k$ outputs. A $(p, \lambda, k)-$network is said to be *valid*, if, for any choice of p inputs and of p outputs, there exist p edge-disjoint paths linking all the chosen inputs to all the chosen outputs. For symmetry reason, we may assume in the following that $k \geq \lambda$ and we note $n := p + k$.

Deciding if a given $(p, \lambda, k)-$network is valid is a Co-NP complete problem, see [BKP+81] (reduction to the problem of finding a clique of given size - adapting their proof, we can suppose the maximum degree of the graphs used is four). Note that finding a minimal network is a challenging problem as the number of possible networks grows exponentially and that testing the validity of a given network is an NP complete problem; indeed if we fix the valid inputs and the valid outputs it reduced to a flow problem but the number of possible choice of inputs and outputs grows exponentially as they are binomial coefficients

Of primary interest for the applications is the specific case where the switches of the network have degree four (although the theory can be generalized to any degree). The problem is to find $N(p, \lambda, k)$, the *minimum* number of switches in a valid $(p, \lambda, k)-$network and to give *constructions* of such networks.

In the specific case $\lambda = k$, one can design networks with a particular property: every switch linked to a port is also linked to an amplifier. In practise, when both two available ports and amplifiers are connected to the same switch, we route one to the other. This minimizes the length of the signal and avoids the interferences. These networks are called *s*implified networks. Observe that in that case every switch is linked to either two or four switches.

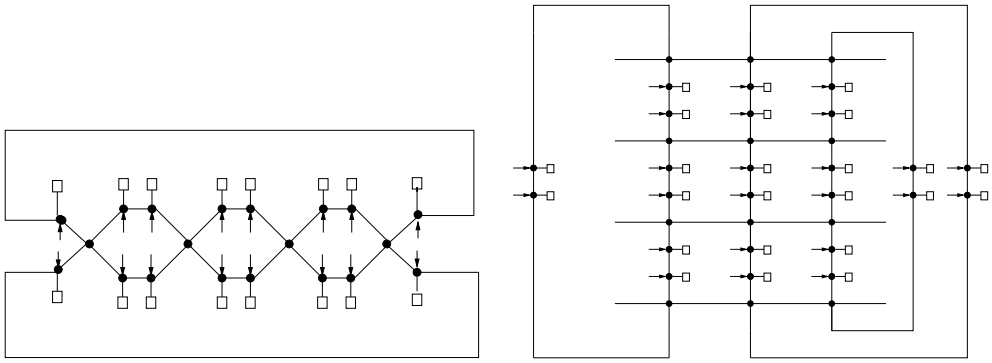

Figure 1: A valid (16,4,4)-network and a valid (24,6,6)-network.

Related Work. When $\lambda = 0$, a valid network is called a *s*elector, this has been studied for instance in [BDD02]. A general theory of selectors can be found in [BPT01] where several results are obtained for small values of k. For example it is proved that $N(p, 0, 4) = \lceil \frac{5p}{4} \rceil$.

In [BDH$^+$03] and [DHMP05] the case of selectors with switches of degree $2k > 4$ is considered. In [BHT06] the authors consider a variant of selectors where some signals have priority and should be sent to amplifiers offering the best quality of service.

In [BGP06], small values of k and λ are obtained, for instance $N(p, 2, 1) = N(p, 1, 2) = N(p, 2, 2) = p + 2$.

For $k \in \{3, 4\}$ and $0 < \lambda \leq 4$

$$\mathcal{N}(p, \lambda, k) = \lceil \frac{5n}{4} \rceil$$

For $k \in \{5, 6\}$ and $0 < \lambda \leq 6$

$$\mathcal{N}(p, \lambda, k) \leq \lceil \frac{3n}{2} \rceil$$

Examples of $(p, 4, 4)$ and $(p, 6, 6)-$networks are given in Fig. 1.

Results. We are primarily interested in this paper in *large networks*, where $n = p + k$ tends to infinity and also k is large enough.

We first present a simple cut criterion which implies the validity of networks. This criterion will be useful both to prove the validity of the designed networks (giving upper bounds) and also to find lower bounds for the minimal number $N(p, \lambda, k)$ of switches of valid $(p, \lambda, k)-$networks.

The construction of optimal valid networks will heavily rely on expanders. Using these, we are able to construct simplified networks with $2n$ switches as soon as n is large enough and $k \leq c_1 \log n$ for some constant c_1 (Section 3.3). In Section 5.3 we also give a lower bound of order $2n(1 - \epsilon(k))$ where $\epsilon(k)$ tends to zero when k tends to infinity (but we do

not need $k \leq c_1 \log n$). Thus for simplified networks the problem is asymptotically solved for $k \leq c_1 \log n$.

For general networks, using bipartite expanders, we obtain an upper bound of $n + \frac{3}{4}n$ when $k \leq c_2 \log n$ for some constant c_2. The lower bound we obtain is $(n + \frac{2}{3}n)(1 - \epsilon(\lambda, k))$, and we conjecture that $n + \frac{3}{4}n$ should be the right value. We also give a construction of selectors of size $n + \frac{n}{2}$, in which case we get also a tight lower bound.

To extend the results for larger values of k, we define a local expansion property that we call $\alpha-r$obustness. This notion is interesting by its own sake and contains as particular case several expansion invariants as bisection-width and Cheeger's constant. Using this we present a construction of valid $(p, \lambda, k)-$networks with $3n$ switches for $\lambda \leq k \leq \frac{n}{7}$.

2 Preliminaries

In this section, we define more formally the design problem and introduce notations used throughout the paper. We enounce a cut criterion (Proposition 1): this criterion is fundamental because it characterizes the validity of $(p, \lambda, k)-$networks. It is extensively used to prove that networks are valid.

In Section 5 we use the cut criterion to detect forbidden patterns leading to lower bounds for the number of switches of valid networks. Proofs of lower and upper bounds are simplified by the use of last notion introduced here, the *associated graph* of a network (see Section 3.2 and Section 5.1).

Notations. Given a function f, we define $f(A) := \sum_{a \in A} f(a)$ for any finite set A. For a subset W of vertices of a graph $G = (V, E)$, let us denote by $\Delta(W)$ the set of edges connecting W and $\overline{W} = V \backslash W$, by $\delta(W)$ the cardinality of $\Delta(W)$, and by $\Gamma(W)$ the set of vertices of $\overline{W}$ adjacent to a vertex of W. More generally, the convention used here is that, if a set is designed by an upper case letter, the corresponding lower case letter denotes its cardinality.

$(p, \lambda, k)-$**networks and valid** $(p, \lambda, k)-$**networks.** A $(p, \lambda, k)-$*network* is a triple $\mathcal{N} = \{(V, E), i, o\}$ where (V, E) is a graph and i, o are positive integral functions defined on V called input and output functions, such that for any $v \in V$, $i(v) + o(v) + deg(v) = 4$. The total number of inputs is $i(V) = \Sigma_{v \in V} i(v) = p + \lambda$, and the total number of outputs is $o(V) = \Sigma_{v \in V} o(v) = p + k$. We can see a network as a graph where all vertices but the leaves have degree 4, in which inputs and outputs are leaves. A *non-faulty output function* is a function o' defined on V such that $o'(v) \leq o(v)$ for any $v \in V$ and $o'(V) = p$. A *used input function* is a function i' defined on V such that $i'(v) \leq i(v)$ for any $v \in V$ and $i'(V) = p$. A (p, λ, k)-network is said *valid* if for any faulty output function o' and any used input function i', there are p edge-disjoint paths in G such that each vertex $v \in V$ is the initial vertex of $i'(v)$ paths and the terminal vertex of $o'(v)$ paths.

Design Problem. Let $N(p, \lambda, k)$ denotes the minimum number of switches of a valid (p, λ, k)-network. The *Design Problem* consists in determining $N(p, \lambda, k)$ and in constructing a minimum (p, λ, k)-network, or at least a valid (p, λ, k)-network with a number of vertices

close to the optimal value. We introduce a variation of the problem: consider networks with $p + \lambda$ doublons (with exactly one input and one output). and with $k - \lambda$ switches with only one output. To find minimum valid network like these is what we call the *Simplified Design Problem.* Networks of this kind are especially good for practical applications, as they simplify the routing process, minimize path lengths and lower interferences between signals.

Excess, Validity and Cut-criterion. We show that, to verify if a network is valid, instead of solving a flow/supply problem for each possible configuration of output failures and of used inputs, it is sufficient to look at an invariant measure of subsets of the network, the *excess*, as expressed in the following proposition.

Proposition 1 (Cut Criterion) *A $(p, \lambda, k)-$network is* valid *if and only if, for any subset of vertices $W \subset V$ the* excess of W*, defined by,*

$$\varepsilon(W) := \delta(W) + o(W) - \min(k, o(W)) - \min(i(W), p),$$

satisfies $\varepsilon(W) \geq 0$.

The intuition is that the signals arriving in W (in number at most $\min(i(W), p)$) should be routed either to the valid outputs of W (in number at least $o(W) - \min(k, o(W))$) or to the links going outside (in number $\delta(W)$). The omitted formal proof reduces to a supply/demand flow problem. Remark that, for the cut criterion, it is sufficient to consider only connected subsets W with connected complement $\overline{W}$ (This comes from the submodularity of ε).

Associated Graph

Vertices $D \in V$ of degree 2 with $i(D) = o(D) = 1$ play an important role. We call them *doublon*. A switch that is not a doublon is called an *R-switch*.

Let $\mathcal{N}$ be a $(p, \lambda, k)-$network. We build a *graph $\mathcal{R}$ associated to $\mathcal{N}$*. Its vertices are the R-switches of $\mathcal{N}$.

Remark that for $k \geq 3$ there is no paths of length more than 4 with only doublons in the middle. Indeed if we consider the set W consisting of this three doublons we have $\delta(W) = 2$ and $o(W) = i(W) = 3$. The cut criterion would give a contradiction.

Consequently the edges of $\mathcal{R}$ are of three kinds, repectively E_0, E_1 and E_2: the edges of $\mathcal{N}$ between two $R-$switches, the edges corresponding in $\mathcal{N}$ to a path of length 2 with a doublon in the middle and those corresponding to a path of length 3 with 2 doublons in the middle.

3 Upper Bounds: The design problem

In this section, we present three constructions with $2n$, $n+\frac{3}{4}n$ and $n+\frac{n}{2}$ switches respectively for the simplified design problem, the design problem (any λ) and for the design problem when $\lambda = 0$ for $k \leq c \cdot \log n$ (where c is a constant depending only on the expansion factor of 3 and $4-$regular graphs).

3.1 Expanders

An expander (see [DH00] or [Mur03] for a survey) is a highly connected sparse graph. They are used in various fields of computer science and mathematics. For example in constructions of error-correcting codes with efficient encoding and decoding algorithms, derandomization of random algorithms, construction of finitely generated groups which cannot be embedded uniformly in a Hilbert space, ... but they also have applications in areas directly related to the subject of this paper as design of explicit superefficient networks and explicit construction of graphs with large girth (length of the smallest cycle).

We present here known results about expanders that are used in proof of Sections 3.3, 3.4 and 3.5. The formal definition of an expander is as follows: an (n, r, c)-E-expander is a finite r-regular graph $G = (V, E)$ with n vertices such that for any set A of vertices of G with $|A| \leq |V|/2$ we have

$$\delta(A) \geq c|A|,$$

Well known examples of expanders are Ramanujan graphs (for more on Ramanujan graphs see [Mor94]). Explicit constructions of Ramanujan graphs are known for r of the form $r = q + 1$, with q a prime power (in particular for $r = 3$ and $r = 4$, which are of special interest in our case). More precisely there exist explicit constructions of an infinite family $G_i = (V_i, E_i)$ of ramanujan graphs such that $|V_i| \underset{i\to\infty}{\to} \infty$ with an expansion factor

$$c \geq 1 - \frac{4(r-1)}{r^2}.$$

It gives $c \geq \frac{1}{4}$ for $4-$regular graphs and $c \geq \frac{1}{9}$ for $3-$regular graphs.

The girth of the graphs of this familly satisfies:

$$g(G_i) \geq \frac{2}{3} \log_q |V_i|$$

There also exist a family $H_i = (W_i, F_i)$ of explicit *bipartite* Ramanujan graphs of girth:

$$g(H_i) \geq \frac{4}{3} \log_q |W_i|.$$

Probabilistic arguments show the existence of graphs, for *any large order of networks* (and not only for the specific values of both families) bipartite or not, with the same properties of girth and *even better expansion factor*: for 4-regular graphs, expanders

$$c \geq \frac{11}{25}$$

exist (see [Bol88]).

3.2 Cut Criterion for the Associated Graph

To simplify the proofs of validity of Sections 3.3, 3.4 and 3.5, it is better to work directly on the associated graph $\mathcal{R}$ of the $(p, \lambda, k)-$network $\mathcal{N} = ((V, E), i, o)$. More precisely, it means that, when applying the cut criterion on $\mathcal{N}$, it would be sufficient to consider only subsets of $\mathcal{R}$.

We introduce another notion of excess, ε', defined for all $W \subset V$ as $\varepsilon'(W) := \delta(W) + o(W) - \min(k, o(W)) - i(W)$. Note that $\varepsilon'(W) \leq \varepsilon(W)$. Hence, if, for all $W \subset V$, $\varepsilon'(W) \geq 0$, the network is valid. But we have no more an equivalence. The good property of ε' is that, if a switch D is a doublon, $\varepsilon'(W \cup \{D\}) \leq \varepsilon'(W)$. So it is enough to verify the cut criterion for subsets W of $\mathcal{N}$ consisting of a set of $R-$switches plus all the doublons on the edges of type E_1 and E_2 incident to the $R-$switches.

3.3 Simplified Design Problem - Upper Bound $2n$

In this subsection, we use the existence of expanders presented in subsection 3.1 to construct valid $(p, \lambda, k)-$networks with $2n = 2(p+k)$ switches for large n and $k \leq c_1 \log n$ (c_1 depending on the expansion factor of $4-$regular expanders, $c_1 = \frac{1}{6}$ when using explicit Ramanujan graphs). Furthermore we will show in Section 5 a lower bound of the same order for the simplified design problem.

Theorem 1 *Let $n = p + k$, $k \leq \frac{1}{6} \log n$, for n large enough, we have:*

$$N(p, k, k) \leq 2n$$

Proof. The results for expanders exposed in Section 3.1 state the existence of $(n, 4, c = \frac{1}{4})-$E-expander, $G = (V, E)$, of girth g, $g \geq \frac{2}{3} \log n$. Let $k \leq c \cdot g$ and $p = n - k$. It is well known that in a $4-$regular graph there exists a family of vertex disjoint cycles covering all vertices of G. Let us call this familly F and add n new vertices by subdividing each edge of F into two edges. On each new vertex, we add an output and input creating a doublon. We now have a $(p, k, k)-$network, $\mathcal{N}$, with $2n$ switches.

Let us prove that this network is valid. We use the cut criterion on $\mathcal{R}$, which is in that case exactly G. Remark first that the network is symmetric in inputs and outputs and that for any subset $W \subset V$ of vertices, $i(W) = o(W)$. Hence we have

$$\varepsilon'(W) = \delta(W) - \min(k, o(W)).$$

Furthermore, note that when a network is symmetric, it is sufficient to verify the cut criterion only for subsets W with $|W| \leq |V|/2$.

- If $|W| \geq \frac{k}{c}$ then, by the expansion property, there are at least k edges between W and $\overline{W}$ and so $\varepsilon'(W) \geq 0$.

- Otherwise, if $|W| < \frac{k}{c} \leq g$, we have $|W| < g$ and thus W is acyclic. There are at most $|W|-1$ edges inside W and, as G is 4-regular, we have $\delta(W) \geq 2|W|+2$. Let $e_F(W)$ be the number of edges of F incident to a node of W, by construction $o(W) = e_F(W)$. As the cycles of F are disjoint, $e_F(W) \leq 2|W|$. Hence $\delta(W) \geq e_F(W) = o(W)$, that is $\varepsilon'(W) \geq 0$.

The $(p,k,k)-$network is valid. □

3.4 Design Problem - Upper Bound $n + \frac{3}{4}n$

In this section, we construct general $(p,k,k)-$networks for large n, $k \leq c_2 \log n$ (where c_2 depends on the expansion factor of $3-$regular expanders). We can derive $(p,\lambda,k)-$networks for any $\lambda \leq k$ by deleting $k-\lambda$ inputs. Theorem 2 gives a $n + \frac{3}{4}n$ upper bound for such networks. Constructions are based on 3-regular bipartite expanders.

Definition 1 Two edges are at distance d *if any path that contains both of them is of length at least* $d+2$. A node is at distance d of an edge *if any path that contains both of them is of length at least* $d+1$.

Lemma 1 *Let G be a $3-$regular bipartite graph $G = (V_1 \cup V_2, E)$ of large girth ($g = \Theta(\log|V_1|)$) which is an $(2|V_1|,3,c)$-E-expander and suppose $2k \leq cg$. Let $\mathcal{F}$ be a set of selected edges, such that any two edges of $\mathcal{F}$ are at distance at least 3. The network $\mathcal{N}$ obtained from G by adding a doublon on each edge of $\mathcal{F}$, an input on each vertex of V_1 and an output on each vertex of V_2 is a valid network.*

Proof.

We use the cut criterion on the associated graph following Section 3.2. As the construction is symmetric in inputs and outputs, it is sufficient to consider connected subsets $W \in V$ with $|W| \leq \lceil \frac{|V|}{2} \rceil$. The cut criterion is implied by

$$\varepsilon'(W) = \delta(W) + o(W) - \min(o(W),k) - i(W) \geq 0$$

We now distinguish two cases for W.

- case 1: $|W| \leq \frac{2k}{c} \leq g$

  As $o(W) - min(o(W),k) \geq 0$, we have

  $$\varepsilon'(W) \geq \delta(W) - i(W).$$

  so it is sufficient to prove $\delta(W) \geq i(W)$ As $|W| \leq g$, there are no cycles inside W and therefore there are $|W|-1$ edges inside; G is $3-$regular so $\delta(W) = |W|+2$. Furthermore, $i(W) = v_1(W) + d$ so we have to prove that $v_2(W) + 2 \geq d$.

  Consider a doublon D incident to W and its associated edge $e(D) = (v_1(D), v_2(D))$ with $v_1(D) \in V_1$ and $v_2(D) \in V_2$. If $v_2(D) \in W$, associate D with $v_2(D)$. If $v_2(D) \notin W$, then $v_1(D) \in W$. Associate to D a neighboor of $v_1(D) \in W$. As the distance of two edges of $\mathcal{F}$ is at least 3, different doublons have defferent associate vertices in $V_2 \cap W$. So $v_2(W) \geq d$.

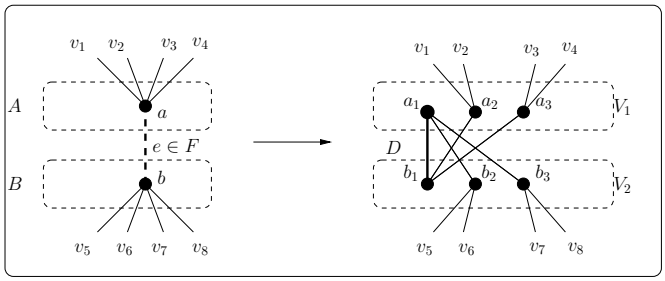

Figure 2: 'Expansion' of a selected couple of a bipartite graph (A, B, E).

- case 2: $|W| \geq \frac{2k}{c}$, by definition of ε' we have

$$\varepsilon' \geq \delta(W) + o(W) - k - i(W).$$

  - if $i(W) - o(W) \leq k$, by the expansion property, we have $\delta(W) \geq 2k \geq i(W) - o(W) + k$
  - if $i(W) - o(W) \geq k$, since the graph is bipartite, there is at least $3(i(W) - o(W))$ outgoing edges. So $\varepsilon'(W) \geq 2(i(W) - o(W)) - k \geq k > 0$.

□

Theorem 2 *(Construction) Let $n = p + k$, $k \leq \frac{1}{15} \log n$, for n large enough, we have:*

$$N(p, k, k) \leq n + \frac{3}{4} n$$

Proof. Take $H = (A, B, E)$, a bipartite $(2|A|, 4, c')$-E-expander with girth $g = \frac{4}{3} \log n$. Let k, $k \leq c' \cdot g \leq \frac{4}{3} \log n$ (for existence see Section 3.1). Take a complete matching F in the bipartite complement $\overline{H} = (A, B, \overline{E})$ of H, that is, if $(u, v) \in F$, then $u \in A$, $v \in B$ and u, v are not adjacent in H.

For each edge $e = (a, b)$ of F, replace a and b by three vertices a_1, a_2, a_3 and b_1, b_2, b_3, add edges (a_1, b_1), (a_1, b_2), (a_1, b_3), (a_2, b_1) and (a_3, b_1). Finally join a_2 (resp b_2) to two neighbours of a (resp b) and a_3 (resp b_3) to the two others neighbors. See Figure 5.1. We obtain a $3-regular$ bipartite graph G, $(6|A|, 3, \frac{c}{5}) - E-$expander. Note that by construction the edges of type (a_1, b_1), with $(a, b) \in F$ form a selected set $\mathcal{F}$ of edges pairwise at distance 3. We can apply Lemma 1 to G with $\mathcal{F}$ as selected set. All together we have $6|A| + |\mathcal{F}| = 7|A|$ switches, $|V_1| + |\mathcal{F} = 4|A|$ inputs, $|V_2| + |\mathcal{F} = 4|A|$ outputs. So, with $n = p + k$, $N(p, \lambda, k) = 7|A| = \frac{7}{4} n$

□

3.5 Design Problem: $\lambda = 0$ - Upper Bound $n + \frac{n}{2}$

In this section, we study the case when $\lambda = 0$. In the litterature, this kind of networks are known as selectors In Theorem 3 we construct valid $(p, 0, k)-$networks with $n + \frac{n}{2}$ switches for n large and $k \leq c_3 \log n$ (c_3 depends on the expansion factor of 3-regular expanders). Such networks are built from bipartite vertex-expanders (see Definition 2).

Definition 2 *(V-Expander) An (n, r, d)-V-expander is a finite r-regular graph $G = (V, E)$ with $|V| = n$ ($|V_1| = |V_2| = n$ in case of a bipartite graph and $V = V_1 \cup V_2$) such that for any subset A of vertices ($A \subset I$ when G is bipartite), the set of neighbors of $A, \Gamma(A) = \{v \in V | (v, u) \in E$ for some $u \in V\}$ satisfies*

$$|\Gamma(A)| \geq |A| + d(1 - |A|/n)|A|$$

Theorem 3 *Let $n = p + k$, $k \leq \frac{1}{48} \log_2 n$, for n large enough, we have:*

$$N(p, k, k) \leq n + \frac{3}{4} n$$

Proof.

Let us take $G = (V_1, V_2, E)$ a bipartite $(n, 3, d = \frac{1}{12}) - V-$expander of large girth $g \geq \frac{4}{3} \log n$(for existence see Section 3.1). Let $\alpha = \frac{4}{d} = 48$ and k such that $k \leq d \cdot \frac{g}{2} \leq \frac{g}{12}$ and $k.(2^{\alpha k} + 1) \leq n$.

To each vertex of V_1, we connect a node with one input and two outputs. Such a switch is said to be of type T. To each vertex of V_2, we connect an input. We choose a subset S of k nodes in V_2 such that the distance between any two of them is at least $\alpha \cdot k$ (see Definition 1). By the choice of k we can choose the nodes in S one by one after removing all the nodes at distance less than αk of already chosen nodes (at each step we remove at most $2^{\alpha k} + 1$ new nodes). We remove the inputs of all nodes of S obtaining a $(p = n - k, 0, k)-$network that we call $\mathcal{N} = (V, E, i, o)$.

To prove that this network is valid let X be a connected subset of V. Let $\overline{X} = V_1 \cup V_2 \setminus X$, $A_1 = X \cap V_1$, $S_{\overline{X}} = S \cap \Gamma(A_1) \cap \overline{X}$. We define $Z(X) = X \cup \Gamma(A_1) \setminus S_{\overline{X}}$ (Figure 3).

$Z = Z(X)$ is connected. We also have $\varepsilon(Z) \leq \varepsilon(X)$ so it is sufficient to verify the cut criterion for Z (same principles as in Section 3.2). Let $A_2 = Z \cap V_2$.

We distinguish four cases for $|A_1|$:

- $|A_1| \leq \frac{k}{2}$: as $o(Z) = 2|A_1| \leq k$ and $\varepsilon(Z) \geq \delta(Z) - i(Z)$, we have $\delta(Z) \geq 3|A_2| - 3|A_1|$ and $i(Z) \leq |A_2| + |A_1|$. Furthermore there is no cycle in Z so $|A_2| \geq 2|A_1|$. Hence $\varepsilon(Z) \geq 0$.
- $\frac{k}{2} \leq |A_1| \leq \frac{k}{d} \leq \frac{g}{2}$:
  we have $\varepsilon = \delta(Z) + o - i - k$ and $i \leq |A_1| + |A_2|$. So $\varepsilon(Z) \geq \delta(Z) - A_2 + A_1 - k$. As Z contains no cycle $\delta(Z) \geq 3|A_2| - 3|A_1|$ so $\varepsilon \geq 2|A_2| - 2|A_1| - k \geq 2|A_1| - k \geq 0$. We use again that $|A_2| \geq 2|A_1|$.

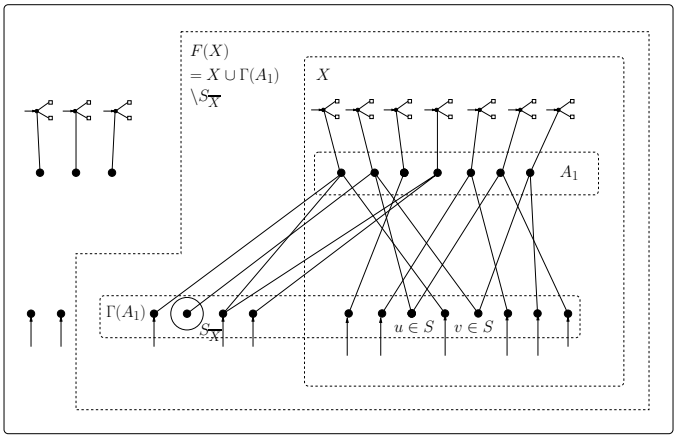

Figure 3: Sketch of proof of Theorem 3

- $\frac{k}{d} \leq |A_1| \leq n - \frac{k}{d}$:
  in this case, $\varepsilon \geq \delta(Z) - |A_2| + |A_1| - k$ and $\delta(Z) \geq 3(|A_2| - |A_1|) = |A_2| - |A_1| + 2(|A_2| - |A_1|)$, so we have $\varepsilon \geq 2(|A_2| - |A_1|) - k$. Furthermore $|A_2| - |A_1| \geq \Gamma_G(A_1) - k$, because at most k nodes of $\Gamma_G(A_1)$ are in $S \setminus A_2$ (where $\Gamma_G(A_1)$ is the neighbourhood of A_1 in G) By the expansion property we have:

  $$|\Gamma_G(A_1)| \geq |A_1| + d(1 - |A_1|/n)|A_1|$$

  In this case $d(1 - |A_1|/n) \geq 2k$. So $|\Gamma_G(A_1)| - |A_1| \geq 2k$. So $|A_2| - |A_1| \geq k$. It implies $\varepsilon \geq 0$.

- $n - \frac{k}{d} \leq |A_1|$:
  we can assume that $\overline{Z}$ is connected (see the remarks on Proposition 1). As the nodes in S are at distance at least αk and $\alpha k > \frac{k}{d}$, $\overline{Z}$ contains at most one node in S. Hence $i \geq |A_2| - k + 1 + |A_1|$ and $\varepsilon \geq \delta(Z) - |A_2| + |A_1| - 1$. Because of the connectivity of Z and the $3-$regularity $|A_2| > |A_1|$. So $\varepsilon \geq 0$.

□

4 A new general approach to the design of valid networks based on graph robustness

The construction of valid networks is related to a more general expansion property of graphs, especially to what can be seen as a 'bounded expansion property' or expansion property only

for sets of bounded size. We call this property *robustness*. Given a real α, the $\alpha-$robustness of a graph, r_α, is the largest integer such that, for any subset $X \in V$ of size $|X| \leq \frac{|V|}{2}$:

$$\delta(X) \geq \min(\alpha \cdot |X|, r_\alpha),$$

For $\alpha = 1$ we just say robustness. In other words for small subsets we ask for an expansion factor of α but for large subsets we only care about the existence of enough outgoing edges r_α. There are two main problems: on one hand we would like to have a feeling about the robustness on a general graph, which means giving some upper bounds, for instance showing the existence of subsets which violate the $\alpha-$robustness. This problem covers in particular the problem of bissection-width, studied by several authors (see for example [Alo93] and [MP01]), which has several important applications. On the other hand for many applications one would like to be able to find graphs of large robustness ($\alpha-$robustness). First examples of such graphs are expanders of expansion factor c which give graphs with $c-$robustness equal to $\frac{n}{2}$ where n is the number of vertices. In a forthcoming paper, we study robustness of regular graphs. Using an approach close to the one of Bollobas ([**?**]) we can derive a lower bound on the robustness of random $2k$ regular graphs. Those graphs are obtained as union of k hamiltonian cycles []. Using the first moment method, one can prove that: First, the probability that a set of size $q \leq \frac{\downarrow}{V}|14$ has an edge border strictly less than q is very small. On the other hand for big subsets, we have at least $\frac{|V|}{14}$ outgoing edges with large propability. This ensures that a random 4 regular graph has robustness almost surely greater than $\frac{|V|}{14}$. So we have

Theorem 4 *The maximum robustness of* 4*-regular graphs on* $2n$ *vertices is at least* $\frac{n}{7}$*. More precisely random* 4*-regular graphs on* $2n$ *nodes are* $\frac{n}{7}$*-robust with high probability as* n *goes to infinity.*

Note that this first moment bound may be not tight. Moreover one can prove using standard martingale arguments that the robustness of a random regular graph is sharply concentrated around its mean. However, we don't know what is the exact value of this mean. Furthermore, since computing the robustness of a graph is NP-Hard, Monte Carlo method can not be used to evaluate this mean. Finally, we don't know if random regular graphs achieve the best possible robustness.

Using the concept of graph robustness we can extend the results of last section to construct valid networks for $k \leq \frac{n}{2}$. More complete results will appear, for example, the previous theorem implies:

Theorem 5 *For* $k \leq \frac{n}{7}$ *there exist* $(p, \lambda, k)-$*valid networks of size* $3n$*.*

Proof. Suppose given a $4-$regular Hamiltonian graph G of robustness $\frac{n}{7}$ on $2n$ vertices. Extract a complete matching from a Hamiltonian cycle and add a doublon to every edge of this matching. It's now straightforward to show that the resulting network is valid. This gives a valid $(p = n - k, k, k)$-network on $3n$ nodes. $\square$

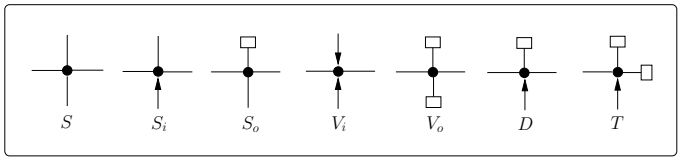

Figure 4: Kinds of switches

Remark that the proof of theorem 5 and 4 are essentially similar in the following sense: Having a graph of $\alpha-$robustness k (in the first case $\alpha = 2$ so k is essentially the girth for a 4-regular graph and in the second case $\alpha = 1$) we choose edges which will carry our inputs and outputs (doublon) and we obtain valid networks for $k = r_\alpha$. Using probabilistic arguments we can prove that by a good choice of these special edges we can build valid networks for every $k(\alpha)$ (depending continuously on α).

5 Lower Bounds

In this section we distinguish switches according to their number of inputs and outputs (represented respectively by arrows $\rightarrow$ and boxes $\square$) as shown in Figure 4: S, S_i, S_o, V_i, V_o, D and T. For example, a switch v is in D if $i(v) = o(v) = 1$. Remember that we called such a switch a doublon and that a switch that is not a doublon is called an *R-switch*. Remark that direct applications of the cut criterion show that no other types of switches are possible and that, as soon as $\lambda \geq 1$, switches of kind T are forbidden. Recall the convention that a lower case letter in the notations indicates the cardinality of the set denoted by the corresponding upper case letter.

Fundamental equations are linking these kinds of switches: Equation 1 (*switch partition equation*) which counts the number N of switches of the network, Equation 2 (*input equation*) which counts the number of inputs and Equation 3 (*output equation*) which counts the number of outputs.

$$N = s + s_i + s_o + d + v_i + v_o + t \quad (1)$$

$$p + \lambda = s_i + 2v_i + d + t \quad (2)$$

$$p + k = s_o + 2v_o + d + 2t \quad (3)$$

In subsection 5.1, we prove a fundamental preliminary theorem, Theorem 6. Its main point is that $N(p, \lambda, k) \geq \frac{3}{2}n + \frac{d}{2} - o(n)$. Direct applications of this theorem give lower bounds for general and simplified networks (Theorems 7, 8). In Sections 5.4 and 5.5, we succeed to obtain a better bound of $n + \frac{2}{3}n - o(n)$ for two cases: when λ goes to infinity (Theorem 9 and when some kinds of switches are not allowed in the networks (Theorem 10). In Section 11, we show that the bound may be increased to $n + \frac{3}{4}n - o(n)$ for other networks using majority arguments on bipartite graphs: Given a bipartite graph (A, B, E) with B partitioned in two

subsets B_0 and B_1, if for each set X of small size ($\leq k$), we have $b_0(X) \geq b_1(X)$, then, in the whole network, $b_o \geq 2b_1 + \epsilon(k)$.

5.1 Fundamental Preliminary Theorem

Definition 3 (q-quasi-partition, see [DHMP05]) Let $G = (V, E)$ be a graph and q a positive integer. A *q-quasi-partition of G* is a family $Q = \{A_1, A_2, \ldots, A_m\}$ of subsets of V, such that :

(i) for every $1 \leq i \leq m$, the subgraph $G[A_i]$ induced by A_i is connected;

(ii) for every $1 \leq i \leq m$, $\frac{q}{2} \leq |A_i| \leq q$;

(iii) $V = \bigcup_{i=1}^{m} A_i$ and $\sum_{i=1}^{m} |A_i| \leq |V| + |\{A_i, |A_i| > \frac{2q}{3}\}|$.

Lemma 2 *[[DHMP05]] Let q be a positive integer and G be a connected graph of order at least $\frac{q}{2}$. Then G admits a q-quasi-partition.*

Remark 1 *If G has several connected components of size at least $\frac{q}{2}$, applying the lemma to each component and using the additivity of both sides of Equation (iii) gives us a $q-$quasi-partition of G.*

Remark 2 *Let Q be a quasi-partition of G as in Lemma 2. Let $t = |\{A_i, |A_i| > \frac{2q}{3}\}|$ and $v = |V|$. Then we have:*

1. $m \leq \frac{2(v+t)}{q}$
2. $t \leq \frac{v}{\frac{2q}{3}-1}$,

For the proof of Theorem 6 we need to define large and small $H-$components of $\mathcal{R}$ the associated graph of $\mathcal{N}$.

Definition 4 [H-component, large and small H-components, adjacent H-components] *We consider a (p, λ, k)-network and its associated graph $\mathcal{R}$. We take H the subgraph of $\mathcal{R}$ which contains only the edges of E_0. An H-*component *of $\mathcal{R}$ is a connected component of H. An H-component is said* large *(respectively* small*) if it has more than (resp. strictely less than) q switches, with q the greatest integer satisfying $2(q + (2q + 2)q) + 2 \leq k - 1$. Remark that $q \sim \frac{\sqrt{k}}{2}$. Two H-components C_1 and C_2 are said* adjacent *if there exists an edge of $\mathcal{R}$ with one $R-$switch in C_1 and the other in C_2.*

Proposition 2 1. *A small H-component has no outgoing edge of kind E_2.*

2. *A small H-component has no input inside.*

3. *Two small H-components are not adjacent.*

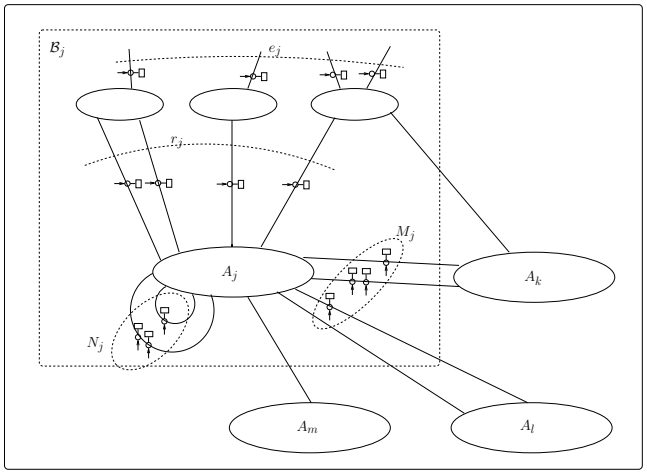

Figure 5: Sketch of proof of Theorem 6

Proof. Let C be a small H-component. We will apply the cut criterion of Section 3.2 to the set $\tilde{C}$ of $\mathcal{N}$ obtained from C by adding in $\mathcal{N}$ the doublons of the edges of type E_1 and E_2 incident to $R-$switchs of C.

As $k \leq p$ and $|C| \leq q \approx \frac{\sqrt{k}}{2}$, $o(C) \leq \frac{k}{2} \leq p$ so, the cut criterion reduces to

$$\delta(\tilde{C}) \geq i(\tilde{C})$$

Let e_1 (res. e_2) be the number of outgoing edges of kind E_1 (resp. E_2) incident to $R-$switches of C.

- By definition of a small component $\delta(\tilde{C}) = e_1 + e_2$. We have $i(\tilde{C}) \geq e_1 + 2e_2 + i(C)$. So by the cut criterion $e_2 = 0$ proving 1) and $i(C) = 0$ proving 2).
- Let C' be an other small $H-$component. If C and C' are joined by $f \geq 1$ edges, then let $W = \tilde{C} \cup \tilde{C}'$, we have $i(W) \geq e_1 + e_1' - f$ and $\delta(W) \leq e_1 + e_1' - 2f$ so $\delta(W) < i(W)$ which gives a contradiction.

□

Theorem 6 *In a valid network $\mathcal{N}$ with $k \leq \frac{n}{2}$, we have*

$$N(p, \lambda, k) \geq \left(\frac{3}{2}n - (k - \lambda)\right)\left(1 - \frac{7}{2\sqrt{k}} + O\left(\frac{1}{k}\right)\right) + \frac{d}{2}\left(1 + \frac{7}{2\sqrt{k}} + O\left(\frac{1}{k}\right)\right)$$

where $n = p + k$.

Proof. According to Lemma 2 and Remark 1, the union of the large H-components of $\mathcal{R}$ admits a q-quasi-partition $Q = \{A_1, \ldots, A_m\}$. So each A_j is connected and of size $\frac{q}{2} \leq |A_j| \leq q$.

Between all edges with doublons we distinguish:

- the edges of type R between an A_j and a small $H-$component,
- the ones of type M between two distinct A_j and A_k and
- the one of type N inside one A_j.

We introduce the sets $\mathcal{B}_j$ consisting of A_j union all the small $H-$components adjacent to it. Let
r_j be the number of edges between A_j and its small H-components,
e_j be the number of outgoing edges of small components of $\mathcal{B}_j$,
M_j be the number of doublons on the edges of type M and
N_j be the number of doublons on the edges of type N.
As two small components can not be adjacent, remark that all r_j and e_j edges are of type R.

Let us now apply the cut criterion to $\mathcal{B}_j$.

$$\delta(\mathcal{B}_j) + o(\mathcal{B}_j) - \min(k, o(\mathcal{B}_j)) - \min(i(\mathcal{B}_j), p) \geq 0$$

As $k \leq \frac{n}{2}$, we have $i(\mathcal{B}_j) \leq p$. We show first $o(\mathcal{B}_j) < k$. For if $o(\mathcal{B}_j) \geq k$, the cut criterion reduces to $\delta(\mathcal{B}_j) \geq k$, furthermore A_j is connected and of size less than q. So it has at most $2q+2$ outgoing edges and the number of small $H-$components of $\mathcal{B}_j$ is at most $2q+2$. As the size of a small $H-$component is less than q, the number of vertices in $\mathcal{B}_j$ is at most $q + (2q+2)q$. Hence the number of outgoing edges $\delta(\mathcal{B}_j)$ is at most $2(q + (2q+2)q) + 2$. By our choice of q it gives

$$k \leq \delta(\mathcal{B}_j) \leq 2(q + (2q+2)q) + 2 \leq k - 1$$

a contradiction.

So $o(\mathcal{B}_j) < k$. The cut criterion is now equivalent to $\delta(\mathcal{B}_j) \geq i(\mathcal{B}_j)$. For clarity reason, in the next equation, A_j is omitted, so for example $e_j = e_j(A_j)$. We have $\delta(\mathcal{B}_j) = \delta'(\mathcal{B}_j) + e_j$ where δ' is the number of outgoing edges of $\mathcal{B}_j$ incident to A_j. Using the definitions of switch kinds we have

$$\delta' = 4|A_j| - 2e(A_j) - r_j - 2N_j - s_i - s_o - 2v_i - 2v_o - 3t$$

Since A_j is connected, $e(A_j) \geq |A_j| - 1$, so:

$$\delta' \leq 2|A_j| + 2 - r_j - 2N_j - s_i - s_o - 2v_i - 2v_o - 3t$$

For the number of inputs in $\mathcal{B}_j$ we have:

$$i(\mathcal{B}_j) = e_j + r_j + M_j + N_j + s_i + 2v_i + t$$

The cut criterion then implies:

$$2|A_j| + 2 \geq 2s_i + s_o + 4v_i + 2v_o + 4t + 3N_j + 2r_j + M_j \tag{4}$$

The total number of doublons is d. All doublons are of type R, M or N. The doublons in M are counted for two different A_j and A_k. So $\sum_{j=1}^{m} M_j + 3N_j + 2r_j \geq 2d$. Hence taking the sum of all equations 4 over all j we obtain

$$2\sum_{j=1}^{m} |A_j| + 2m \geq 2s_i + s_o + 4v_i + 2v_o + 4t + 2d$$

The input and output equations (Equations 2 and 3) give $2s_i+4v_i+2t+2d = 2n-2(k-\lambda)$ and $s_o + 2v_o + 2t = n - d$. Hence

$$2\sum_{j=1}^{m} |A_j| + 2m \geq 3n - d - 2(k - \lambda) \tag{5}$$

The family $\{A_j\}$ forms a quasi-partition of $\mathcal{R}$. Let $t := |\{A_j, |A_j| > \frac{2q}{3}\}|$ and v the number of vertices of $\mathcal{R}$. Then by Remark 2 we have

$$m \leq \frac{2(v+t)}{q}$$

$$t \leq \frac{v}{\frac{2q}{3} - 1}$$

By definiton of a quasi-partition:

$$\sum_{i=j}^{m} |A_j| \leq v + |\{A_j, |A_j| > \frac{2q}{3}\}| = v + t.$$

Puting all these equations into Equation 5 gives

$$2v\left(1 + \frac{1}{\frac{2q}{3} - 1}\right) \geq \frac{q}{q+2}(3n - d - 2(k - \lambda))$$

$$2v \geq n\frac{q}{q+2}\frac{2q-3}{2q} = (3n - d - 2(k - \lambda))\left(1 - \frac{7}{2q+4}\right)$$

Using $N \geq v + d$, we obtain

$$N \geq \left(\frac{3}{2}n - (k - \lambda)\right)\left(1 - \frac{7}{2q+4}\right) + \frac{d}{2}\left(1 + \frac{7}{2q+4}\right)$$

Finally

$$N \geq \left(\frac{3}{2}n - (k-\lambda)\right)\left(1 - \frac{7}{2\sqrt{k}} + O\left(\frac{1}{k}\right)\right) + \frac{d}{2}\left(1 + \frac{7}{2\sqrt{k}} + O\left(\frac{1}{k}\right)\right)$$

□

5.2 Design problem: $\lambda = 0$ - Lower Bound $n + n/2$

Theorem 7 *In a valid network $\mathcal{R}$, when $k \to \infty$ with $k \leq \frac{n}{2}$, we have*

$$N(p, \lambda, k) \geq n + \frac{n}{2} + O(\frac{n}{\sqrt{k}}).$$

Proof. Follows directly from Theorem 6. □

In particular, we obtain a tight bound for networks with $\lambda = 0$ (see upper bound in Section 3.5).

5.3 Simplified Design problem: $\lambda \geq 1$ - Lower Bound $2n$

Theorem 8 *In the simplified case (no switches of kinds S_i, S_o, V_i, V_o allowed), when $k \to \infty$ with $k \leq \frac{n}{2}$, we have*

$$N(p, \lambda, k) \geq 2n + O(\frac{n}{\sqrt{k}}).$$

where $n = p + k$. More precisely

$$N(p, \lambda, k) \geq 2n\left(1 - \frac{7}{4\sqrt{k}} + O\left(\frac{1}{k}\right)\right) + \frac{3}{2}(k-\lambda)\left(1 + \frac{7}{6\sqrt{k}} + O\left(\frac{1}{k}\right)\right).$$

Proof. Proof follows from Theorem 6 and from $d = n - (k - \lambda)$ in the simplified case. □

5.4 Design problem: $\lambda \geq 1$ - $\lambda \to \infty$ - Lower Bound $n + \frac{2}{3}n$

We show here that, when $\lambda \to \infty$, $N(p, \lambda, k) \geq n + \frac{2}{3}n + O(\frac{n}{\sqrt{\lambda}})$ (Theorem 9). We first give a bound for the number of switches of types V_i and V_o using the following remark:

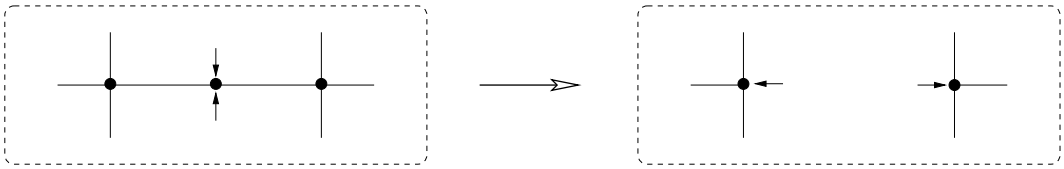

Figure 6: When $\lambda = 0$, switches of kind V_i may be removed.

Remark 3 *When $\lambda = 0$, switches of type V_i are not present in a minimal valid $(p, \lambda, k)-$network. As shown in Figure 6, they may be removed to form a new valid $(p, \lambda, k)-$network with v_i less switches.*

Lemma 3 *When $\lambda \to \infty$ and $k \to \infty$,*

$$\begin{cases} v_i & \leq & N - \frac{3}{2}n - \frac{d}{2} - \frac{k-\lambda}{2} + \lambda O(\frac{n}{\sqrt{k}}) \\ v_o & \leq & N - \frac{3}{2}(n-k+\lambda) - \frac{d}{2} + k - \frac{\lambda-k}{2} + O(\frac{n}{\sqrt{\lambda}}) \end{cases}$$

Proof. Imagine we have a valid $(p, \lambda, k)-$network with N switches and v_i nodes in V_i. We obtain a valid $(p, 0, k)-$network after removing any λ inputs. This new network has at least $v_i - \lambda$ switches of kind V_i. By Remark 3 we may remove these switches and obtain a valid $(p, 0, k)-$network with $N - v_i + \lambda$ switches. Theorem 6 gives

$$N - v_i + \lambda \geq \frac{3}{2}n + \frac{d}{2} + \frac{k-\lambda}{2} + O(\frac{n}{\sqrt{k}}).$$

So the result holds. Symmetry (in the sense of swapping inputs and outputs gives a valid $(p, k, \lambda)-$network) gives the second equation. □

Theorem 9 *When $\lambda \to \infty$ and $k \to \infty$*

$$N(p, \lambda, k) \geq n + \frac{2}{3}n + O(\frac{n}{\sqrt{\lambda}}).$$

Proof. The switch partition and the two equations 2, 3 give here

$$N = 2n - (k - \lambda) - v_i - v_o - d + s$$

Lemma 3 gives

$$\begin{aligned} N &\geq 2n - (k-\lambda) - d + s - 2N + 3n + d \\ &\quad + O(\frac{n}{\sqrt{k}}) + O(\frac{n}{\sqrt{\lambda}}) - \frac{3}{2}(k-\lambda) - \lambda - k \\ N &\geq \frac{5}{3}n + O(\frac{n}{\sqrt{k}}) + O(\frac{n}{\sqrt{\lambda}}) - \frac{5}{2}k + \frac{\lambda}{2}. \end{aligned}$$

□

5.5 Design problem: $\lambda \geq 1$ - $v_i = v_o = 0$ - Lower Bound $n + \frac{2}{3}n$

Remark 4 *As soon as $\lambda \geq 1$, switches of type W ($i(v) = 1$ and $o(v) = 2$) are forbidden.*

Proof. Direct by the cut criterion. □

When $v_i = v_o = 0$, the input equation (Equation 2) becomes $n = d + s_i$ and the output equation (Equation 3) becomes $n = d + s_o$. So $s_i = s_o$ and the switch partition equation (Equation 1) gives

$$N = 2n - d. \tag{6}$$

Theorem 10 *When $\lambda \geq 1$ and no switches of kinds V_i and V_o are allowed, when $k \to \infty$ with $k \leq \frac{n}{2}$, we have*

$$N(p, \lambda, k) \geq n + \frac{2}{3}n + O(\frac{n}{\sqrt{k}}).$$

Proof.

Theorem 6 gives

$$2n - d \geq \frac{3}{2}n + \frac{d}{2} + O(\frac{n}{\sqrt{k}})$$

$$\frac{n}{3} \geq d + O(\frac{n}{\sqrt{k}}).$$

Equation 6 gives

$$N \geq \frac{5}{3}n + O(\frac{n}{\sqrt{k}}).$$

□

5.6 Design problem: $\lambda \geq 1$ - $s = v_i = v_o = 0$, $G = (I, O, E)$-bipartite - Lower Bound $n + \frac{3}{4}n$

Theorem 11 *Let $\mathcal{N}$ be a network of N switches with the associated graph $\mathcal{R} = (V = A \cup B, E)$ such that $\mathcal{R}$ is bipartite, all vertices of A are of type S_o and all vertices of B are of type S_i When $\lambda \geq 1$ and no switches of kinds S, V_i and V_o are allowed, we have*

$$N \geq n + \frac{3}{4}n + O(\frac{n}{\sqrt{k}}).$$

Proof. We are given a ternary bipartite graph $R = (V = A \cup B, E)$ such that all vertices of A have an output and all vertices of B have an input. The vertices of B are partitioned in two sets B_1, B_0. A vertex of B_1 is adjacent to an edge of type E_1 or E_2, not those of B_0.

For subset $X \subset A$ we use the following notations : $B_i(X) = \Gamma(X) \cap B_i, i = 0, 1$ and $b_i = |B_i|$.

Let X be a subset of A such that $F(X) = X \cup \Gamma(X)$ is connected, and $6|X| \leq k$ so we have less than k outputs. To fullfill the cut-criterium for small subsets (less than k outputs), we need

$$b_0(X) \geq b_1(X) - 3 + 3c_{F(X)} \tag{7}$$

where $c_{F(X)}$ is the feed back edge set of the subgraph induced by $F(X)$.

We aim at proving that this can happen only if $b_0 + O(\frac{1}{\sqrt{k}}) \geq 2b_1$.

Let Y be a set of y vertices of B_0 such that $Y \cup \Gamma(Y)$ is connected. We have $|\Gamma(Y)| = 2y+1-c_{F(Y)}$ There is $3y+3-3c$ edges comming out of $F(Y)$, say αy toward vertices of type B_0 and $3y+3-3c-\alpha y$ toward vertices of type B_1. In G we consider the connected subgraph induced by $Z = F(Y) \cup (\Gamma(F(Y) \cap B_1)$. We have $(6-\alpha)y + 3 - 3c_{F(Y)}$ edges inside Z, so the number of vertices in $\Gamma(F(Y) \cap B_1$ is $(6-\alpha)y+3-3c_{F(Y)} - y - (2y+1-c_{F(Y)}) - c_Z = (3-\alpha)y + 2 - 2c_{F(Y)} - c_Z$. If we take $X = \Gamma(Y)$ in Equation 7 we obtain:

$$\begin{aligned}(\alpha+1)y &\geq b_0(X) \geq b_1(X) - 3 + 3c_{F(X)} \\ &\geq (3-\alpha)y + 2 - 2c_{F(Y)} - c_Z - 3 + 3c_{F(X)} \\ &\geq (3-\alpha)y - 1 - 2c_{F(Y)} + 2c_{F(X)}\end{aligned}$$

where in the last inequality we use the fact that $c_Z \leq c_{F(X)}$ and because $c_{F(Y)} \leq c_{F(X)}$ we have:

$$\alpha \geq 1 - \frac{1}{2y}$$

We consider all the connected components of the graph induced by $B_0 \cup A$ and we take a q-quasi-partition of the big components for some q, $q = O(k)$ such that all components are of the form $F(Y)$ for some Y subset of B_0. Now we count the edges going to B_0 and B_1.

For one component D of the quasi-partition with y vertices of B_0, we find at least $(3+\alpha)y \geq 4y - \frac{1}{2}$ edges toward B_0 and at most $2y + \frac{7}{2}$ edges toward B_1 with one extremity in D.

Globally, if m is the number of components and up to some small number of reconting (Quasi-partition arguments) we get $4|A| - \frac{m}{2} = 3b_0$ edges toward B_0 and $2A + \frac{7m}{2} = 3b_1$ edges toward B_1.

Hence $b_0 \geq 2b_1 + O(\frac{1}{\sqrt{k}})$.

□

6 Conclusion

In this paper we proposed constructions of valid $(p, \lambda, k)-$networks and gave lower bounds on their size. The design problem appear to be driven by two constraints: a local one, in

which small patterns are forbidden and another one which is related to some global expansion property of the network. This led us to define $\alpha-$robustness: an expansion parameter of a graph. This parameter is a generalisation of the usual edge-expansion. Using graphs of $2-$robustness $\Theta(\log n)$ we constucted almost optimal simlified networks. Similarly when $k \leq \frac{n}{7}$, using graphs of large $1-$robustness we proposed good simplified networks. Despite of our good understanding of the things for small values of $k(\leq \frac{n}{7})$, a lot of question remains to understand for larger values of k. Those questions seems to be relate to the following problems : In a $4-$regular graph, how many edges can be chosed if we want that for any set of vertices X, the number of chosen edgesin the induced subgraph is less than the number of outgoing edges. This problem is itself related to this two problems : what is the maximun bissection of a $4-$regular graph? what is the minimal number of switches of a (n, n) *superselector? For example one can construct a superselector with* $7n$ *switches by pluging* $\frac{1}{12}$ *doublons in a* $4-$*regular random graph.*

References

[Alo93] *N. Alon. On the edge-expansion of graphs.* Combinatroics, Probability and Computing, *11:1–10, 1993.*

[Bas81] *L. A. Bassalygo. Asymptotically optimal switching circuits.* Problemy Pederachi Informatsii, *17:81–88, 1981.*

[BD99] *B. Beauquier and E. Darrot. Arbitrary size Waksman networks. In* AlgoTel, *pages 95–100, 1999.*

[BDD02] *J-C. Bermond, E. Darrot, and O. Delmas. Design of fault tolerant on-boardnetworks in satellites.* Networks, *40:202–207, 2002.*

[BDH+03] *J-C. Bermond, O. Delmas, F. Havet, M. Montassier, and S. Perennes. Réseaux de télécommunications minimaux embarqués tolérants aux pannes. In* Algotel, *pages 27–32, 2003.*

[BGP06] *J-C. Bermond, F. Giroire, and S. Pérennes. Design of minimal fault tolerant networks: Constructions. In* Submitted to the International Workshop of Graph-Theoric Concepts (WG), *2006.*

[BHT06] *J-C. Bermond, F. Havet, and D. Tóth. Fault tolerant on board networks with priorities.* Networks, *47(1):9–25, 2006.*

[BKP+81] *M. Blum, R. Karp, C. Papadimitriou, O. Vornberger, and M. Yannakakis. The complexity of testing whether a graph is a superconcentrator.* Inf. Proc. Letters, *13:164–167, 1981.*

[Bol88] *B. Bollobás. The isoperimetric number of random regular graphs.* European Journal of Combinatroics, *9, no. 3:241–244, 1988.*

[BPT01] *J.-C. Bermond, S. Perennes, and Cs. D. Tóth. Fault tolerant on-board networks with priorities.* Manuscrit, *2001.*

[Chu79] *F. R. K. Chung. On concentrators, superconcentrators, generalizers and non-blocking networks.* Bell System Tech. J., *58:1765–1777, 1979.*

[CRVW02] *M. Capalbo, O. Reingold, S. Vadhan, and A. Wigderson. Randomness conductors and constant-degree lossless expanders. In* STOCS, *pages 659 – 668, 2002.*

[DH00] *Ding-Zhu Du and Frank K. Hwang, editors.* Notes on the Complexity of Switching Networks, *volume 42. Kluwer Academic Publishers, 2000.*

[DHMP05] *O. Delmas, F. Havet, M. Montassier, and S. Pérennes. Design of fault tolerant on-board networks.* Research report RR 1345-05, Laboratoire bordelais de recherche en informatique (LaBRI), Unité Mixte de Rec herche CNRS (UMR 5800), *2005.*

[hav04] *Fréderic havet. Repartitors, selectors and superselectors. Submitted to Journal of Interconnection Networks, 2004.*

[Hav06] *F. Havet. Repartitors, selectors and superselectors.* Submitted to Journal of Interconnection Networks, *2006.*

[Mor94] *M. Morgenstern. Existence and explicit constructions of* $q+1$ *regular ramanujan graphs for every prime power* q. Journal of Combinatorial Theory Series B, *62:44–62, 1994.*

[MP01] *B. Monien and R. Preis. Upper bounds on bissection width of 3- and 4- regular graphs.* Mathematical foundations of computer science, *Lecture Notes in Comput. Sci., 2136, Springer, Berlin:524–536, 2001.*

[Mur03] *M. Murty. Ramanujan graphs.* Journal of the Ramanujan Mathematical Society, *18:33–52, 2003.*

[ND01] *H. Q. Ngo and D.-Z. Du.* Notes on the complexity of switching networks, *pages 307–367. Kluwer Academic Publishers, Dordrecht, The Netherlands, 2001.*

[Pip77] *N. Pippenger. Superconcentrators.* SIAM Journal on Computing, *6:298–304, 1977.*

[RW80] *R. C. Read and N. C. Wormald. Number of labeled 4-regular graphs.* J. Graph Theory, *4:203–212, 1980.*

Unité de recherche INRIA Sophia Antipolis
2004, route des Lucioles - BP 93 - 06902 Sophia Antipolis Cedex (France)

Unité de recherche INRIA Futurs : Parc Club Orsay Université - ZAC des Vignes
4, rue Jacques Monod - 91893 ORSAY Cedex (France)
Unité de recherche INRIA Lorraine : LORIA, Technopôle de Nancy-Brabois - Campus scientifique
615, rue du Jardin Botanique - BP 101 - 54602 Villers-lès-Nancy Cedex (France)
Unité de recherche INRIA Rennes : IRISA, Campus universitaire de Beaulieu - 35042 Rennes Cedex (France)
Unité de recherche INRIA Rhône-Alpes : 655, avenue de l'Europe - 38334 Montbonnot Saint-Ismier (France)
Unité de recherche INRIA Rocquencourt : Domaine de Voluceau - Rocquencourt - BP 105 - 78153 Le Chesnay Cedex (France)

Éditeur
INRIA - Domaine de Voluceau - Rocquencourt, BP 105 - 78153 Le Chesnay Cedex (France)
http://www.inria.fr
ISSN 0249-6399