HAL open science

Well-posedness results for non-autonomous dissipative complementarity systems

Bernard Brogliato, Lionel Thibault

To cite this version:

Bernard Brogliato, Lionel Thibault. Well-posedness results for non-autonomous dissipative complementarity systems. [Research Report] 2006. inria-00079220v1

HAL Id: inria-00079220

https://inria.hal.science/inria-00079220v1

Submitted on 9 Jun 2006 (v1), last revised 13 Jun 2006 (v3)

HAL is a multi-disciplinary open access archive for the deposit and dissemination of scientific research documents, whether they are published or not. The documents may come from teaching and research institutions in France or abroad, or from public or private research centers.

L'archive ouverte pluridisciplinaire **HAL**, est destinée au dépôt et à la diffusion de documents scientifiques de niveau recherche, publiés ou non, émanant des établissements d'enseignement et de recherche français ou étrangers, des laboratoires publics ou privés.

INSTITUT NATIONAL DE RECHERCHE EN INFORMATIQUE ET EN AUTOMATIQUE

Well-posedness results for non-autonomous dissipative complementarity systems

Bernard Brogliato — Lionel Thibault

N° ????

June 2006

Thème NUM

Rapport de recherche

ISSN 0249-6399 ISRN INRIA/RR--????--FR+ENG

Well-posedness results for non-autonomous dissipative complementarity systems

Bernard Brogliato*, Lionel Thibault†

Thème NUM — Systèmes numériques
Projet Bipop

Rapport de recherche n° ???? — June 2006 — 17 pages

Abstract: This paper deals with the well-posedness of a class of nonsmooth dynamical systems: dissipative complementarity systems. Both the linear and the nonlinear cases are treated, and the systems are non-autonomous. The dissipativity property is used to perform a particular change of state vector which allows one to transform the dynamics into a perturbed Moreau's sweeping process. As an example an electrical circuit with ideal diodes is presented.

Key-words: Moreau's sweeping process, complementarity system, differential inclusion, existence, uniqueness, dissipative systems, prox-regular set.

* Bipop project, INRIA Rhône-Alpes, 655 av. de l'Europe, 38334 Saint-Ismier, France.
† University of Montpellier, Département de Mathématiques, case courrier 051, Place Eugène Bataillon, 34095 Montpellier cedex 5, France.

Unité de recherche INRIA Rhône-Alpes
655, avenue de l'Europe, 38334 Montbonnot Saint Ismier (France)
Téléphone : +33 4 76 61 52 00 — Télécopie +33 4 76 61 52 52

Existence et unicité de solutions pour les systèmes de complémentarité dissipatifs non-autonomes.

Résumé : Nous montrons comment des circuits électriques non-réguliers peuvent moyennant un changement adéquat de variables, se mettre sous la forme de processus de rafle de Moreau. Nous montrons ensuite des résultats d'existence et d'unicité de solutions dans les cas absolument continu et à variations bornées.

Mots-clés : procesus de rafle de Moreau, systèmes de complémentarité, inclusions différentielles, systèmes dissipipatifs, ensemble prox-régulier.

1 Introduction

Complementarity systems have recently been the object of strong interest in the Systems and Control community, because of their applications in various fields like mechanics, electrical circuits, transportation science, etc [18, 10, 7, 6]. The relationships between complementarity systems and other formalisms have been studied in [11, 12]. In this paper we are interested in analysing the existence and uniqueness of solutions of two classes of complementarity systems, by embedding their dynamics into the framework of so-called *perturbed sweeping processes*. The sweeping process is a particular differential inclusion that has been introduced by Moreau [15] and widely studied since then. More precisely, let us consider the following complementarity dynamical system

$$\begin{cases} \dot{x}(t) = Ax(t) + B\zeta(t) + Eu(t) \\ \\ 0 \leq \zeta(t) \perp w(t) = Cx(t) + D\zeta(t) + Gu(t) + F \geq 0, \end{cases} \tag{1.1}$$

where the matrices and vectors A, B, C, D, E, F, G are constant of suitable dimensions, $x(t) \in \mathbb{R}^n$, $u(t) \in \mathbb{R}^p$, $\zeta(t) \in \mathbb{R}^m$. The second line is a complementarity relation between $w(t)$ and $\zeta(t)$, which are forced to remain always orthogonal one to each other (both inequalities are to be understood componentwise, so that the orthogonality can equivalently be expressed componentwise). As it will become clear later, related results are in [8] where is considered a non-autonomous extension of Kato's Theorem for maximal monotone variational inequalities.

In this paper we deal with systems as in (1.1), when the vector relative degree between $w(\cdot)$ and $\zeta(\cdot)$ is equal to $(1, ..., 1)^T \in I\!R^m$ (i.e. the matrix $D = 0$), the triple (A, B, C) is positive real, and $u(\cdot)$ is either a locally absolutely continuous mapping or a mapping of local bounded variation. The developments rely on arguments obtained from recent results in [2, 3] concerning a generalization of the sweeping process, where a perturbation (or a vector field) is considered. This work generalizes some results obtained in [9] where the link between Moreau's process and dissipative complementarity systems was pointed out. It may also be seen as enlarging the studies in [11, 12] on the equivalences between different formalisms like differential inclusions and complementarity systems. The paper is organized as follows: in the next section a physical example that fits with the class of nonsmooth systems we deal with is presented. Section 3 is devoted to prove the well-posedness of the linear perturbation case, whereas section 4 is dedicated to the nonlinear perturbation case. Two major results from [2] and [3] are recalled in the appendix. Throughout the paper we will also recall some definitions and notions that are useful for the developments.

Remark 1 *The reason why it is assumed $D = 0$ throughout the paper, is clear. The tools that we will use for the well-posedness proof rely on embedding the dynamics in (1.1) into differential inclusions. If $D \neq 0$, the basic mathematical framework is different [6, Remark 10].*

2 A physical example

Let us consider the electrical circuit with ideal diodes in figure 1, with $R_1, R_2, R_3 \geq 0$, $L_2, L_3 > 0$. One has $0 \leq -u_{D_4} \perp x_2 \geq 0$ and $0 \leq -u_{D_1} \perp -x_3 + x_2 \geq 0$, where u_{D_4} and u_{D_1} are the voltages of the diodes. The dynamical equations of this circuit are the following ones

$$\begin{cases} \dot{x}_1(t) = x_2(t) \\ \\ \dot{x}_2(t) = -\left(\frac{R_1+R_3}{L_3}\right) x_2(t) + \frac{R_1}{L_3} x_3(t) - \frac{1}{L_3 C_4} x_1(t) + \frac{1}{L_3}\zeta_1(t) + \frac{1}{L_3}\zeta_2(t) + \frac{u(t)}{L_3} \\ \\ \dot{x}_{3(t)} = -\left(\frac{R_1+R_2}{L_2}\right) x_3(t) + \frac{R_1}{L_2} x_2(t) - \frac{1}{L_2}\zeta_1(t) + \frac{u(t)}{L_2} \\ \\ 0 \leq \begin{pmatrix} \zeta_1(t) \\ \zeta_2(t) \end{pmatrix} \perp \begin{pmatrix} -x_3(t) + x_2(t) \\ x_2(t) \end{pmatrix} \geq 0, \end{cases} \tag{2.1}$$

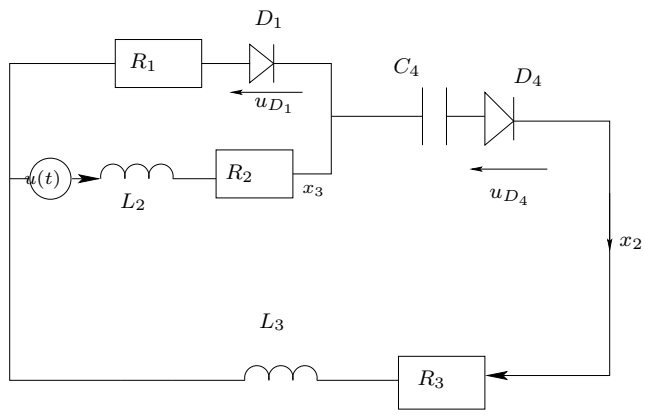

Figure 1: A circuit with ideal diodes.

where $x_1(\cdot)$ is the time integral of the current across the capacitor, $x_2(\cdot)$ is the current across the capacitor, and $x_3(\cdot)$ is the current across the inductor L_2 and resistor R_2, $-\zeta_1$ is the voltage of the diode D_1 and $-\zeta_2$ is the voltage of the diode D_4. The system in (2.1) can be written compactly as $\dot{x} = Ax + B\zeta + Eu(t)$, $0 \leq \zeta \perp y = Cx \geq 0$, with

$$A = \begin{pmatrix} 0 & 1 & 0 \\ -\frac{1}{L_3C_4} & -\frac{R_1+R_3}{L_3} & \frac{R_1}{L_3} \\ 0 & \frac{R_1}{L_2} & -\frac{R_1+R_2}{L_2} \end{pmatrix},$$

$$B = \begin{pmatrix} 0 & 0 \\ \frac{1}{L_3} & \frac{1}{L_3} \\ -\frac{1}{L_2} & 0 \end{pmatrix}, \quad C = \begin{pmatrix} 0 & 1 & -1 \\ 0 & 1 & 0 \end{pmatrix},$$

$$E = \begin{pmatrix} 0 \\ \frac{1}{L_3} \\ \frac{1}{L_2} \end{pmatrix}.$$

It can be checked that the triple (A, B, C) is positive real [4]. Thus the dynamics in (2.1) belong to the class of passive linear complementarity systems. It is not difficult to construct examples with $G \neq 0$ (see e.g. [10, Example 8]). Other fields of application exist in transportation science and macro-economics, as under certain hypothesis complementarity systems are equivalent to projected dynamical systems and various types of differential inclusions and variational inequalities [11, 12].

3 Well-posedness of the dynamics

3.1 State space transformation

We now employ a state space transformation proposed in [9, 6] which allows us to express linear passive complementarity systems of vector relative degree $(1, ..., 1)^T \in I\!R^m$ as in (1.1), into an evolution variational inequality or a differential inclusion. We recall the steps of the transformation for readabilit sake. Since the triple (A, B, C) is positive real, there exists from the Kalman-Yakubovic-Popov Lemma [13] a symmetric positive definite matrix P such that $PB = C^T$. Defining R as $R^2 = P$, the symmetric positive definite square root of P, and letting $z = Rx$, one gets:

$$\begin{cases} \dot{z}(t) = R\dot{x}(t) = RAR^{-1}z(t) + REu(t) + RB\zeta(t) \\ \\ 0 \leq \zeta(t) \perp w(t) = CR^{-1}z(t) + Gu(t) + F \geq 0. \end{cases} \tag{3.1}$$

Assuming for the moment that both $\zeta(\cdot)$ and $w(\cdot)$ are functions of time, and using basic convex analysis (see section 3.3) one equivalently rewrites (3.1) as

$$-\dot{z}(t) \in RAR^{-1}z(t) + REu(t) + RB\ \partial\psi_{(\mathbb{R}^+)^m}(CR^{-1}z(t) + Gu(t) + F)$$

and using $R^2B = C^T$

$$-\dot{z}(t) \in -RAR^{-1}z(t) - REu(t) + R^{-1}C^T\ \partial\psi_{(\mathbb{R}^+)^m}(CR^{-1}z(t) + Gu(t) + F), \tag{3.2}$$

where $\psi_Q(\cdot)$ denotes the indicator function of the set Q, i.e., $\psi_Q(x) = 0$ if $x \in Q$ and $\psi_Q(x) = +\infty$ otherwise, and ∂ denotes the subdifferential of convex analysis. The inclusion in (3.2) is in turn equivalent to the differential inclusion

$$-\dot{z}(t) + RAR^{-1}z(t) + REu(t) \in R^{-1}\partial\psi_{K(t)}(R^{-1}z(t)) \tag{3.3}$$

with

$$K(t) := \{x \in \mathbb{R}^n : Cx + Gu(t) + F \geq 0\}. \tag{3.4}$$

Putting

$$S(t) := R(K(t)) = \{Rx : x \in K(t)\}, \tag{3.5}$$

it is easy to see that $\psi_{S(t)}(x) = (\psi_{K(t)} \circ R^{-1})(x)$ for all $x \in \mathbb{R}^n$. Since R is invertible, we have

$$\partial\psi_{S(t)}(x) = R^{-1}(\partial\psi_{K(t)})(R^{-1}x) \quad \text{for all} \quad x \in R^n$$

and hence, denoting by $N(S(t); x)$ the normal cone in the sense of convex analysis, i.e., $N(S(t); x) := \partial\psi_{S(t)}(x)$, the differential inclusion (3.3) may be written in the form

$$-\dot{z}(t) + RAR^{-1}z(t) + REu(t) \in N(S(t); z(t)), \tag{3.6}$$

which appears as the perturbation of a sweeping process. The inclusion (3.6) is in turn equivalent to the evolution variational inequality

$$\langle \dot{z}(t) - RAR^{-1}z(t) - REu(t), v - z(t)\rangle \geq 0, \ \ \forall\, v \in I\!R^n,\ z(t) \in S(t).$$

If $G = 0$ then K does not vary with time and [8, Theorem 2.2] applies with $u(\cdot)$ a continuous mapping with locally L_1 derivative. Here we let K hence S be time-varying, which complicates the analysis.

3.2 Existence and uniqueness of solutions

Let $u(\cdot) : [0, +\infty[\to \mathbb{R}^p$ be a mapping from $[0, +\infty[$ to $\mathbb{R}^p$. In the notation used above and below we identify (when there is no ambiguity) a matrix and the linear mapping associated with it with respect to the usual basis of $\mathbb{R}^n$, $\mathbb{R}^m$ etc. So, the range of the matrix C will be denoted by $\mathrm{Rge}(C)$.

We now proceed to the analysis of the perturbed sweeping process (3.6). Consider an interval I of $\mathbb{R}$ and a mapping $z : I \to \mathbb{R}^n$. We recall that the variation of $z(\cdot)$ on I is the supremum of $\sum \|z(t_i) - z(t_{i-1})\|$ over the set of all finite sets of points $t_0 < t_1 < \cdots < t_k$ of I. When this supremum is finite, the mapping $z(\cdot)$ is said to be of *bounded variation* on I. The mapping $z(\cdot)$ is of *locally bounded variation* on I if it is of bounded variation on each compact subinterval of I.

Considering a set-valued mapping $S : I \rightrightarrows \mathbb{R}^n$ and replacing the above expression $\|z(t_i) - z(t_{i-1})\|$ by the Hausdorff distance $haus(S(t_i), S(t_{i-1}))$, one obtains the concept of set-valued mappings with *bounded variation* on I (resp. *locally bounded variation* on I). The Hausdorff distance between two subsets Q_1 and Q_2 in $\mathbb{R}^n$ is given as usual by

$$haus(Q_1, Q_2) := \max\{\sup_{x\in Q_1} d(x, Q_2),\ \sup_{x\in Q_2} d(x, Q_1)\}.$$

Denote by $\mathrm{var}_S(t)$ the variation of $S(\cdot)$ over $[0,t]$. When the variation function $\mathrm{var}_S(\cdot)$ is locally absolutely continuous on $[0,+\infty[$, the set-valued mapping $S(\cdot)$ is said to be *locally absolutely continuous* on $[0,+\infty[$. As usual the local absolute continuity of the function $v(\cdot) := \mathrm{var}_S(\cdot)$ means that for each $T \in [0,+\infty[$ and for any positive number ε there exists some positive number η such that $\sum_{i=1}^{k} |v(t_i) - v(s_i)| < \varepsilon$ whenever $\sum_{i=1}^{k}(t_i - s_i) < \eta$ with $s_i < t_i < s_{i+1}$ in $[0,T]$.

Recall that with any mapping $z : I \to I\!R^n$ of locally bounded variation on a subinterval I of $I\!R$ is associated a Radon vector measure, the so-called *differential vector measure* dz of $z(\cdot)$ on I. If, in addition, $z(\cdot)$ is right continuous, this vector measure dz satisfies

$$z(t) = z(s) + \int_{]s,t]} dz \quad \text{for all } s,t \in I \text{ with } s \leq t.$$

If a mapping or set-valued mapping is right continuous and has a bounded variation (resp. locally bounded variation) on I, we will say for short that it is *rcbv.* (resp. *locally rcbv*).

When an initial condition $z_0 \in S(0)$ is fixed and the set-valued mapping $S(\cdot)$ is locally absolutely continuous, the concept of solution of (3.6) is clear in the sense that it is, as usual, a locally absolutely continuous mapping $z(\cdot)$ for which $z(0) = z_0$ and the inclusion (3.6) holds for all t outside of a Lebesgue null subset of $[0,+\infty[$. Recall that any locally absolulety continous mapping $z(\cdot)$ with values in $\mathbb{R}^n$ is derivable Lebesgue almost everywhere and $z(t) - z(s) = \int_s^t \dot{z}(\tau)\, d\lambda(\tau)$. Here and below, λ denotes the one-dimensional Lebesgue measure.

Suppose now that $S(\cdot)$ is locally *rcbv* and the mapping f with $f(t,z) := -RAR^{-1}z - REu(t)$ is not identically null. Throughout, in such a case we will denote by $\mu := d(\mathrm{var}_S)$ the differential measure of $\mathrm{var}_S(\cdot)$. This Radon measure μ is obviously positive since the function $\mathrm{var}_S(\cdot)$ is non decreasing. According to [3] a mapping $z : [0,+\infty[\to \mathbb{R}^n$ is a solution of (3.6) with z_0 as initial condition if:

(i) $z(\cdot)$ is locally *rcbv* and satisfies $z(0) = z_0$ and $z(t) \in S(t)$ for all $t \in [0,+\infty[$;

(ii) there exists a positive Radon measure ν absolutely continuously equivalent to the measure $\mu + \lambda$ and with respect to which the differential vector measure dz is absolutely continuous with density $\frac{dz}{d\nu} \in L^1_{loc}([0,+\infty[, \nu; R^n)$ and

$$-\frac{dz}{d\nu}(t) - f(t,z(t))\frac{d\lambda}{d\nu}(t) \in N(S(t); z(t)) \quad \nu - \text{a.e. } t \in [0,+\infty[, \tag{3.7}$$

where $\frac{d\lambda}{d\nu}(\cdot)$ denotes the density relative to ν of the Lebesgue measure λ which is obviously absolutely continuous with respect to the measure μ.

It is observed in [3] that any mapping satisfying (i) is a solution if and only if (ii) holds with the measure $\mu + \lambda$ itself in place of ν.

So, in the bounded variation case we will follow [3] in writing (3.6) in the form

$$\begin{cases} -dz \in N(S(t); z(t)) + f(t,z(t))d\lambda \\ \\ z(0) = z_0 \in S(0). \end{cases} \tag{3.8}$$

Before proving our theorem on existence and uniqueness in the linear case, les us establish the following lemma.

Lemma 3.1 *Assume that*

$$\mathrm{Rge}(C) - \mathbb{R}^m_+ = \mathbb{R}^m \tag{3.9}$$

(which obviously holds whenever the linear mapping associated with C is onto, i.e., the matrix C has rank m).

If the mapping $u(.)$ has a local bounded variation (resp. is locally absolutely continuous) on $[0, +\infty[$, then the closed convex set-valued mapping $S(\cdot)$ has a local bounded variation (resp. is locally absolutely continuous) too.

In the same way, $S(\cdot)$ is right continuous with respect to the Hausdorff distance whenever $u(\cdot)$ is right continuous.

Proof: By assumption (3.9) and by the formula in page 760 of Robinson [1], there exists some constant $\gamma > 0$ (depending only on the matrix C) such that for all $s, t \in [0, +\infty[$ (and with $K(t)$ as defined above)

$$\mathrm{haus}(K(t), K(s)) \leq \gamma \|G(u(t)) - G(u(s))\|$$

and hence

$$\mathrm{haus}(K(t), K(s)) \leq \gamma \|G\| \|u(t) - u(s)\|.$$

Since $S(t) := R(K(t))$, one obtains easily that for all $s, t \in [0, +\infty[$

$$\mathrm{haus}(S(t), S(s)) \leq \|R\| \, \mathrm{haus}(K(t), K(s)) \leq \gamma \|R\| \, \|G\| \|u(t) - u(s)\|.$$

It is not difficult to check that this last inequality and the local bounded variation (resp. local absolute continuity) of the mapping $u(\cdot)$ entails the local bounded variation (resp. local absolute continuity) of the set-valued mapping $S(\cdot)$ on the interval $[0, +\infty[$.

Finally, the right continuity property obviously follows from the same inequality above. ■

In the proof of Theorem 3.3 we will need the following result of Moreau [14]. In [14] it has been established in the general Hilbert setting.

Proposition 3.2 *Let ν be a positive Radon measure on a compact interval I and $z(\cdot) : I \to \mathbb{R}^n$ be a* rcbv *mapping whose differential measure dz is absolutely continuous with respect to ν. Then, the function $\Phi : I \to \mathbb{R}$ with $\Phi(t) := \|z(t)\|^2$ is an rcbv function whose differential measure $d\Phi$ satisfies, in the sense of the ordering of real measures,*

$$d\Phi \leq 2\langle z(\cdot), \frac{dz}{d\nu}(\cdot)\rangle d\nu,$$

where $\langle \cdot, \cdot \rangle$ denotes the canonical inner product of $\mathbb{R}^n$.

We can now prove the theorem.

Theorem 3.3 *Assume that (3.9) in Lemma 3.1 holds and that the mapping $u(\cdot)$ is locally absolutely continuous (resp. locally* rcbv*). Then the perturbed differential inclusion (3.3) with initial condition $z(0) := z_0 \in R(K(0))$ has one and only one locally absolutely continuous (resp. locally* rcbv*) solution on $[0, +\infty[$.*

Proof: As above, put for every $(t, z) \in [0, +\infty[\times \mathbb{R}^n$

$$f(t, z) := -RAR^{-1}z - REu(t).$$

Obviously the mapping $f(\cdot, \cdot)$ is Borel measurable in t (in fact it is *rcbv* or continuous) and Lipschitz continuous with respect to z. Further for

$$k(t) := \max\{\|RE(u(t))\|, \|RAR^{-1}\|\}$$

one has the $\mathrm{L}^1_{\mathrm{loc}}$ linear growth condition

$$\|f(t, z)\| \leq k(t)(1 + \|z\|) \quad \text{for all} \quad (t, z) \in [0, +\infty[\times \mathbb{R}^n. \tag{3.10}$$

Using Lemma 3.1 and the properties above concerning the mapping $f(\cdot,\cdot)$ we may apply Theorem 1 in [2] (see the Appendix) to obtain, in the case where $u(\cdot)$ is absolutely continuous, that the perturbed sweeping process differential inclusion

$$\begin{cases} -\dot{z}(t) \in N(S(t);(z(t)) + f(t,z(t)) \\ \\ z(0) = z_0 \in S(0) \end{cases}$$

has one and only one locally absolutely continuous solution on $[0,+\infty[$. The equivalence above between (3.3) and (3.6) with the initial conditions $z(0) = z_0 \in R(K(0))$ and $z(0) = z_0 \in S(0)$ respectively yields the conclusion of the theorem in the absolutely continuous case.

Suppose now that the mapping $u(\cdot)$ is locally *rcbv* on $[0,+\infty[$. By Lemma 3.1 we know that the set-valued mapping $S(\cdot)$ is also locally *rcbv*. So Theorem 3.1 in [3] (see the Appendix) ensures that the differential inclusion (3.8) has at least a solution $z(\cdot)$ which is locally *rcbv*.

Let us prove the uniqueness. Consider two locally *rcbv* solutions $z_1(\cdot)$ and $z_2(\cdot)$ and fix any number $T > 0$. Let μ be the Radon measure associated with the variation function $\mathrm{var}_S(\cdot)$ and put as above $\nu := \mu + \lambda$. With respect to this positive Radon measure ν the differential measures dz_i and the Lebesgue measure λ are absolutely continuous, for i=1,2, and

$$-\frac{dz_i}{d\nu}(t) - f(t,z_i(t))\frac{d\lambda}{d\nu}(t) \in N(S(t);z_i(t)) \quad \nu - a.e.\ t \in [0,T].$$

Then for $\gamma := \|RAR^{-1}\|$ we have for ν-almost all $t \in [0,T]$

$$\langle \frac{dz_1}{d\nu}(t) + f(t,z_1(t))\frac{d\lambda}{d\nu}(t) - \frac{dz_2}{d\nu}(t) - f(t,z_2(t))\frac{d\lambda}{d\nu}(t), z_1(t) - z_2(t)\rangle \leq 0$$

hence

$$\langle \frac{dz_1}{d\nu}(t) - \frac{dz_2}{d\nu}(t), z_1(t) - z_2(t)\rangle \leq \gamma\|z_1(t) - z_2(t)\|^2 \frac{d\lambda}{d\nu}(t).$$

According to Proposition 3.2, for any $t \in [0,T]$ we have

$$\|z_1(t) - z_2(t)\|^2 \leq \int_{]0,t]} 2\gamma\|z_1(s) - z_2(s)\|^2 \frac{d\lambda}{d\nu}(s)\, d\nu(s),$$

i.e.,

$$\|z_1(t) - z_2(t)\|^2 \leq \int_{]0,t]} 2\gamma\|z_1(s) - z_2(s)\|^2\, d\lambda(s).$$

The Gronwall lemma (see e.g. [5, Proposition VI-9]) yields $z_1(t) = z_2(t)$ for all $t \in [0,T]$ and hence the uniqueness property is established and the proof is complete. ■

Remark 2 *The terms $Eu(t)$ and $Gu(t)$ in (1.1) play a different role in the well-posedness proof, see (3.3) and (3.4). According to [2] it is sufficient to assume that $\|Eu(t)\|$ is upper bounded by an $\mathrm{L}^1_{\mathrm{loc}}$ function. In the proofs of Lemma 3.1 and Theorem 3.3, we have not envisaged that $Eu(t)$ and $Gu(t)$ may not involve the same components of $u(t)$. The result is easily generalizable to the case of measurable mapping $Eu(\cdot)$ and locally* rcbv *(resp. locally absolutely continuous) mapping $Gu(\cdot)$.*

Remark 3 *This result can be useful to settle a solid well-posedness ground in view of subsequent feedback control, controllability analysis, trajectory tracking. Indeed setting $Eu(t) = E(Hx(t) + v(t))$ one recovers the previous framework, changing A into $A + EH$ and $Eu(t)$ into $Ev(t)$, and similarly changing C into $C+GH$ and $Gu(t)$ into $Gv(t)$. The problem of feedback passification may be important [23] in our context. It is not tackled here since this is not the goal of this paper.*

Remark 4 *When the solution is rcbv, it may possess jumps. The jumps may be deduced from (3.8) by noting that state jumps corresponds to atoms of the measure dz, so that (3.8) may be rewritten at such atoms as*

$$-z(t^+) + z(t^-) \in N(S(t); z(t^+)), \tag{3.11}$$

that is equivalent, provided $S(t)$ is a nonempty convex set, to

$$z(t^+) = prox[S(t); z(t^-)], \tag{3.12}$$

i.e., $z(t^+)$ $(= z(t))$ is the (unique) closest vector to $z(t^-)$ inside $S(t)$ (equivalently, the projection of $z(t^-)$ on $S(t)$ in the Euclidean metric). If $z_0 \notin R(K(0))$ then an initial jump has to be imposed on $z(0)$. Then the above result holds on $(0, +\infty)$. In [7] the well-posedness of linear complementarity systems as in (1.1) has been shown, when the quadruplet (A, B, C, D) is positive real, and the mapping $u(\cdot)$ is piecewise Bohl (Bohl functions are continuous functions possessing a rational Laplace transform). Specifically, [7, Theorem 7.5] proves the global existence and uniqueness of a solution with $x(\cdot)$ in $L_2(\mathbb{R}^+)$, and $\zeta(\cdot)$ is a measure whose singular part has a support contained in the set of discontinuity times of $Gu(t)$ union the initial time. Notice that the set of locally rcbv functions contains piecewise Bohl functions. Thus we consider more general inputs $u(\cdot)$ than [7, Theorem 7.5]. However since a function may belong to $L_2(\mathbb{R}^+)$ and not be locally rcbv, and vice-versa, we conclude that our results and those of [7, Theorem 7.5] are different. As shown in section 4 our framework extends to a class of nonlinear complementarity systems.

3.3 Comments on the complementarity formalism and on dissipativity

The foregoing subsection is devoted to show the well-posedness of the differential inclusion in (3.3), which is written as an inclusion of measures in (3.8) (or an inclusion of densities in (3.7)) when solutions are locally *rcbv*. The passage from the complementarity system in (1.1) to the complementarity system in (3.1) is done thanks to the state variable change $z = Rx$. The passage from the complementarity system in (3.1) to the differential inclusion is done thanks to the equivalence

$$0 \leq \zeta(t) \perp w(t) \geq 0 \Leftrightarrow -\zeta(t) \in \partial\psi_P(w(t)),\ P = (I\!R^+)^m,$$

which holds for vectors $w(t), \zeta(t) \in I\!R^m$. Let us now make the following observation: when $u(\cdot)$ is locally *rcbv*, then $z(\cdot)$ is locally *rcbv* and may possess jumps. Therefore ζ is a measure, whose atoms coincide with the times of jumps of $z(\cdot)$ and of $u(\cdot)$. The complementarity relation in (3.3) becomes meaningless at such atoms since it involves the product of a measure with a time-discontinuous function. In a dissipative systems perspective such a problem is troublesome as it means that the supply rate $W(\zeta, w) = \zeta^T w$ is not defined as a product of Schwarz' distributions at the atoms of dz (this difficulty is already present in the setting of nonsmooth mechanical systems, see e.g. [22, §1.2.2]). Thus writing down the infinitesimal dissipation inequality is not possible. It is perhaps possible to give a meaning to the input-output product $\langle \zeta, w(t) \rangle = \int \zeta^T w$ by constructing a measure from a functional. More precisely let $\zeta = \delta_t$, the Dirac measure at time t, and let $f(\cdot)$ be right-continuous at t. The space of functions which are δ_t-integrable contains functions continuous at t, and also all the functions $f(\cdot)$ which are δ_t-almost everywhere equal to an integrable (continuous) function $g(\cdot)$. Since the support of δ_t is $\{t\}$, it is sufficient that $f(t) = g(t)$. Then

$$\langle f, \delta_t \rangle = \int f d\delta_t = \int g d\delta_t = \langle g, \delta_t \rangle = g(t) = f(t) = f(t^+).$$

This may be a path to properly define a dissipation inequality over any time interval $[0, \tau]$ with $\tau > 0$. However as explained below the framework of this paper allows us to solve this issue without going into such abstract measures considerations.

In this paper we started from a complementarity formulation (1.1) and then constructed a differential inclusion which is given under its more general form in (3.8). However in view of the above observation,

it may be more logical to interpret our result in the reverse sense: the inclusion (3.8) or equivalently (3.7) is given in the case of locally absolutely continuous solutions by the inclusion (3.6). Given the definition of the set $S(t)$ in (3.5), the variable change $z = Rx$ allows one to conclude that provided $u(\cdot)$ is locally absolutely continuous, then (3.6) is equivalent to (3.1) which in turn is equivalent to (1.1) (equivalence means that if $z(\cdot)$ is the unique solution of (3.6) with initial data z_0, then $x(\cdot) = R^{-1}z(\cdot)$ is the unique solution of (3.1) with initial data $x_0 = R^{-1}z_0$). In the case $z(\cdot)$ is locally *rcbv*, the measure differential inclusion (3.8) appears to be a more general formalism than (1.1) which per se cannot handle state jumps. The measure differential inclusion (3.8) allows us to derive a state jump as shown in (3.11) (3.12), and to give a meaning to the dynamics at the atoms of dz. Moreover as exposed in the next section the differential inclusion formalism, that is originally constructed for nonlinear time-varying perturbations $f(t, z)$, is quite useful for the study of a class of nonlinear dissipative non-autonomous complementarity systems.

Let us come back on the dissipation inequality issue raised above. At atoms of dz one has $\frac{dz}{d\nu}(t) = \beta(z(t^+) - z(t^-))$ for some $\beta > 0$, while $\frac{d\lambda}{d\nu}(t) = 0$ because the Lebesgue measure has no atom. Then (3.7) is equivalent to (3.11) or (3.12). In other words, there is a $\bar{\zeta}(t) \in -N(S(t); z(t^+))$ such that $z(t^+) - z(t^-) = \bar{\zeta}(t)$. The function $\bar{\zeta}(t)$ is the density of ζ at the atom t with respect to $d\nu$, i.e., the magnitude of the Dirac measure ζ, and we may write it as $\bar{\zeta}(t) = \frac{d\zeta}{d\nu}(t)$. We may consequently write the input-output product of the dissipation inequality ([1]) associated with the differential inclusion (3.7) as

$$\langle \frac{d\zeta}{d\nu}(t), w(t)\rangle = \langle \frac{d\zeta}{d\nu}(t), CR^{-1}(z(t^+) + z(t^-)) + Gu(t)\frac{d\lambda}{d\nu}(t) + F\frac{d\lambda}{d\nu}(t)\rangle. \tag{3.13}$$

A similar development is proposed in [9] for Lagrangian nonsmooth systems embedded in the so-called Moreau's second order sweeping process. The product in (3.13) obviously is zero outside the atoms of dz.

4 Nonlinear dissipative complementarity systems

We now focus our attention to nonlinear systems of the form

$$\begin{cases} \dot{x}(t) = a(x(t)) + b(x(t))\zeta(t) + e(x(t), u(t)) \\ \\ 0 \leq \zeta(t) \perp w(t) = c(x(t)) + g(u(t)) \geq 0, \end{cases} \tag{4.1}$$

where $x(t) \in \mathbb{R}^n$, $u(t) \in \mathbb{R}^p$, $w(t) \in \mathbb{R}^m$, the mappings $a(\cdot)$, $b(\cdot)$, $e(\cdot)$ are continuous and $g(\cdot)$ is supposed to be locally Lipschitz continuous, $a(0) = 0$, $g(0) = 0$, $e(\cdot, 0) = 0$ and the regularity of $c(\cdot)$ and $u(\cdot)$ will be specified later. Let us assume that the uncontrolled system

$$\begin{cases} \dot{x}(t) = a(x(t)) + b(x(t))\zeta(t) \\ \\ w(t) = c(x(t)) \end{cases} \tag{4.2}$$

is dissipative with respect to the supply rate $w^T\zeta$, i.e. in particular (see [13]), there exists a positive function $V(\cdot)$ such that $V(0) = 0$ and

$$c^T(x) = \frac{\partial V}{\partial x}^T(x)b(x). \tag{4.3}$$

Let us assume that $V(\cdot)$ is of class $C^3(\mathbb{R}^n; \mathbb{R}^+)$ and that the Hessian $\frac{\partial^2 V}{\partial x^2}(x)$ is positive definite and symmetric for all $x \in \mathbb{R}^n$. The reason why we ask for C^3 property and not C^2 will appear later. Let us perform the state transformation $z = h(x)$, with

$$\frac{\partial h}{\partial x}(x) = \left(\frac{\partial^2 V}{\partial x^2}(x)\right)^{\frac{1}{2}} =: \Lambda(x).$$

[1] The standard dissipation inequality is obtained setting $u(\cdot) \equiv 0$ and $F = 0$ and we use this terminology with some abuse in a more general framework.

We therefore implicitly assume that $\left(\frac{\partial^2 V}{\partial x^2}(x)\right)^{\frac{1}{2}}$ is integrable, and that $h(\cdot)$ is a diffeomorphism from $\mathbb{R}^n$ into $\mathbb{R}^n$. These conditions are severe, however they are satisfied each time the storage function $V(\cdot)$ is a quadratic function with constant Hessian.

We obtain

$$\begin{cases} \dot{z}(t) = \frac{\partial h}{\partial x}^T(x)a(h^{-1}(z(t))) + \frac{\partial h}{\partial x}^T(x)b(h^{-1}(z(t)))\zeta(t) + \frac{\partial h}{\partial x}^T(x)e(h^{-1}(z(t)), u(t)) \\ 0 \leq \zeta(t) \perp w(t) = c(h^{-1}(z(t))) + g(u(t)) \geq 0. \end{cases} \tag{4.4}$$

Using basic convex analysis we rewrite (4.4) as the inclusion

$$-\dot{z}(t) + \frac{\partial h}{\partial x}^T(x)a(h^{-1}(z(t))) + \frac{\partial h}{\partial x}^T(x)e(h^{-1}(z(t)))u(t)$$

$$\in \frac{\partial h}{\partial x}^T(x)b(h^{-1}(z(t)))\partial\psi_{(\mathbb{R}^+)^m}(c(h^{-1}(z(t))) + g(u(t))).$$

Let us now assume that $b(x) = B$ is a constant $n \times m$ matrix. Using (4.3) and $\frac{\partial h}{\partial x}(x) = \left(\frac{\partial^2 V}{\partial x^2}(x)\right)^{\frac{1}{2}}$ we get

$$-\dot{z}(t) + \frac{\partial h}{\partial x}^T(x)a(h^{-1}(z(t))) + \frac{\partial h}{\partial x}^T(x)e(h^{-1}(z(t)), u(t))$$

$$\in \left(\frac{\partial^2 V}{\partial x^2}(x)\right)^{-\frac{1}{2}} \left(\frac{\partial c}{\partial x}\right)^T \partial\psi_{(\mathbb{R}^+)^m}(c(h^{-1}(z(t))) + g(u(t))).$$

Setting $S(t) := \{z \mid \ c(h^{-1}(z)) + g(u(t)) \geq 0\}$ and $\Phi_t(z) := c \circ h^{-1}(z) + g(u(t))$, we see that $\psi_{S(t)} = \psi_{(\mathbb{R}^+)^m} \circ \Phi_t$.

This equality leads us to assume that there exists some constant $\rho > 0$ such that for all $x \in \mathbb{R}^n$

$$\rho\mathbb{B}_{\mathbb{R}^m} \subset B^T\Lambda(x)(\mathbb{B}_{\mathbb{R}^n}) + (\mathbb{R}_+)^m, \tag{4.5}$$

where $\mathbb{B}_{\mathbb{R}^m}$ denotes the Euclidean closed unit ball in $\mathbb{R}^n$ centered at the origin.

This assumption (4.5) along with the assumption on the regularity of $V(\cdot)$ ensure that the convex (hence tangentially regular) function $\psi_{(\mathbb{R}^+)^m}$ and the Jacobian at $z(t)$ of $\psi_{S(t)}$ fulfill the requirement for the equality formula in [17, Theorem 10.6] and hence the equality $\frac{\partial c \circ h^{-1}}{\partial z} = \frac{\partial c}{\partial x}\left(\frac{\partial h}{\partial x}\right)^{-1}$ allows us to translate the last differential inclusion into

$$-\dot{z}(t) + \frac{\partial h}{\partial x}^T(x)a(h^{-1}(z(t))) + \frac{\partial h}{\partial x}^T(x)e(h^{-1}(z(t)), u(t)) \in \partial\psi_{S(t)}(z(t)), \tag{4.6}$$

where $\partial\psi_{S(t)}(z(t))$ denotes (see [17]) the limiting subdifferential of the function $\psi_{S(t)}$ ([2]). Recalling that the limiting subdifferential of the indicator function ψ_Q of a set Q is nothing else but its limiting normal cone $N(Q;\cdot)$, we may rewrite the inclusion in (4.6) more compactly as follows:

$$-\dot{z}(t) + \tilde{h}(z(t)) + \tilde{e}(z(t), u(t)) \in N(S(t); z(t)). \tag{4.7}$$

As a first step in the arguments of Theorem 4.2 we establish the following lemma. In its proof we use the main idea of the development of the sufficiency part of Theorem 9.40 in [17] but we deal with the inequality below in all the space $\mathbb{R}^n$. (Of course, the inequality can be seen as a *global* metric regularity).

Lemma 4.1 *Under the assumption (4.5), for the mapping $k : \mathbb{R}^n \to \mathbb{R}^m$ with $k(z) := c \circ h^{-1}(z)$ and for any fixed $\hat{z} \in \mathbb{R}^n$, the function $y \mapsto d(\hat{z}, k^{-1}((\mathbb{R}_+)^m - y))$ is finite and Lipschitz continuous with $1/\rho$ as Lipschitz modulus on all $\mathbb{R}^n$.*

[2] It is worth noting that $S(t)$ may not be a convex set, so that the notions of subdifferential and normal cone of convex analysis used in the previous section have to be extended to more general (nonconvex) objects.

Proof: Considering the set-valued mapping $M : \mathbb{R}^n \rightrightarrows \mathbb{R}^m$ with $M(z) := -k(z) + (\mathbb{R}_+)^m$, we have

$$d(\hat{z}, M^{-1}(y)) = d(\hat{z}, k^{-1}((\mathbb{R}_+)^m - y)) =: \varphi(y) \in \mathbb{R}_+ \cup \{+\infty\}.$$

Fix any real number α and take any sequence $(y_n)_n$ converging to y and satisfying $\varphi(y_n) \leq \alpha$. Choose $z_n \in M^{-1}(y_n)$ with $\varphi(y_n) = \|\hat{z} - z_n\|$. The sequence $(z_n)_n$ is bounded and hence without loss of generality we may suppose that it converges to some z in $\mathbb{R}^n$. Obviously $\|\hat{z} - z\| \leq \alpha$ and it is easy to see that $z \in M^{-1}(y)$. Therefore, $\varphi(y) \leq \alpha$ and this yields that φ is lower semicontinuous.

Fix now any $(\bar{y}, y^*)$ in the graph of the Fréchet subdifferential of φ (see e.g. [17] for the definition) and choose $\bar{z} \in M^{-1}(\bar{y})$. Then for each $\varepsilon > 0$ there exists some neighborhood Y of $\bar{y}$ such that for all $y \in Y$

$$\langle y^*, y - \bar{y}\rangle \leq \varphi(y) - \varphi(\bar{y}) + \varepsilon\|y - \bar{y}\|,$$

which means for all $z \in \mathbb{R}^n$

$$\langle 0, z - \bar{z}\rangle + \langle y^*, y - \bar{y}\rangle \leq \|z - \hat{z}\| + \psi_{\mathrm{gph}\, M}(z, y) - \|\bar{z} - \hat{z}\| - \psi_{\mathrm{gph}\, M}(\bar{z}, \bar{y}) + \varepsilon\|y - \bar{y}\|.$$

Thus, $(0, y^*)$ is a Fréchet subgradient of the function $(z, y) \mapsto \|z - \hat{z}\| + \psi_{\mathrm{gph}\, M}(z, y)$ at $(\bar{z}, \bar{y})$, where $\mathrm{gph}\, M := \{(z, y) : y \in M(z)\}$ denotes the graph of the set-valued mapping M. The two functions in the sum being regular and the first one being convex continuous, subdifferential sum rule provides some $z^* \in \mathbb{B}_{\mathbb{R}^n}$ such that (z^*, y^*) is a Fréchet normal to $\mathrm{gph}\, M$ at $(\bar{z}, \bar{y})$. Putting $\bar{p} = \bar{y} + k(\bar{z}) \in (\mathbb{R}_+)^m$, it is not difficult to translate the latter into $y^* \in N((R_+)^m; \bar{p})$ and $z^* = y^* \circ \nabla k(\bar{z})$.

Using $z^* \in \mathbb{B}_{\mathbb{R}^n}$ and the inclusion (4.5), we obtain for any $q \in \mathbb{B}_{\mathbb{R}^m}$ some $q' \in \mathbb{B}_{\mathbb{R}^n}$ and $p \in (\mathbb{R}_+)^m$ such that

$$\rho\langle y^*, b\rangle = \langle y^*, \nabla k(\bar{z})(q') + p\rangle \leq \langle y^* \circ \nabla k(\bar{z}), q'\rangle = \langle z^*, q'\rangle \leq 1,$$

which entails $\|y^*\| \leq 1/\rho$. According to this Fréchet subdifferential boundedness and to the lower semicontinuity of φ, the conclusion of the lemma follows from [21, Theorem 2.1], for example. ■

With Lemma 4.1 at hand, we prove our theorem relative to nonlinear dissipative complementarity systems, where we notice that the regularity of the function $c(\cdot)$ is secured by (4.3).

Theorem 4.2 *Consider the system in (4.1) and suppose that $a(\cdot)$, $e(\cdot)$ are continuous, $g(\cdot)$ is locally Lipschitz continuous, and $b(x) = B$ is a constant matrix. Suppose also that (4.1) is dissipative with a storage function $V(\cdot)$ of class C^3 such that $\frac{\partial^2 V}{\partial x^2}(x) > 0$ for all $x \in \mathbb{R}^n$ and such that (4.5) holds. Let $u(\cdot)$ be locally absolutely continuous, and $z_0 \in S(0)$. Then there exists some $T > 0$ such that the perturbed differential inclusion (4.7) with z_0 as initial condition has at least one locally absolutely continuous solution on $[0, T[$ and the solution is unique whenever $\frac{\partial^2 V}{\partial x^2}(\cdot)$ is bounded on the convex hull* $\mathrm{co}(\mathrm{Rge}\, S)$ *of* $\mathrm{Rge}(S)$.

If in addition, $a(\cdot)$ and $e(\cdot, u)$ are locally Lipschitz continuous and the mapping $(t, z) \mapsto \tilde{h}(z) + \tilde{e}(z, u(t))$ in (4.7) satisfies an $\mathrm{L}^1_{\mathrm{loc}}$ linear growth condition like (3.10), then T may be taken equal to $+\infty$.

Proof: The statement in the above lemma translates that the inverse M^{-1} of the set-valued mapping M with $M(z) = -k(z) + (\mathbb{R}_+)^m$ is Lipschitzian on R^m with respect to the hausdorff distance (with $1/\rho$ as Lipschitz modulus). Since $S(t) = M^{-1}(g(u(t))$, the assumptions above easily give the local absolute continuity of the set-valued mapping S with respect to the Hausdorff distance. Put $f(t, z) := -\tilde{h}(z) - \tilde{e}(z, u(t))$ with $\tilde{h}(\cdot)$ and $\tilde{e}(\cdot)$ given by the translation of (4.6) into (4.7). Fix any positive number $r > \|z_0\|$ and take

$$\tilde{f}(t, z) := \begin{cases} f(t, z) & \text{if} \quad \|z\| \leq r \\ f(t, \frac{r}{\|z\|} z) & \text{if} \quad \|z\| \geq r. \end{cases}$$

This mapping $\tilde{f}(\cdot, \cdot)$ is continuous and bounded on $[0, r] \times \mathbb{R}^n$. By Theorem 4.4 in [20] the differential inclusion

$$-\dot{z}(t) \in N(S(t); z(t)) + \tilde{f}(t, z(t)) \tag{4.8}$$

with initial condition $z_0 \in S(0)$ has at least an absolutely continuous solution $z(\cdot)$ on $[0, r]$. Since $z(\cdot)$ is continuous, we may choose some positive number $T \leq r$ such that $\|z(t)\| \leq r$ for all $t \in [0, T]$. Then for

all $t \in [0,T]$ we have $\tilde{f}(t,z(t)) = f(t,z(t))$ and hence from (4.8) we obtain that $z(\cdot)$ is a solution of (4.7) on $[0,T]$.

Suppose now the boundedness of $\frac{\partial^2 V}{\partial x^2}(\cdot)$ on $\mathrm{co}(\mathrm{Rge}\, S)$ and fix any $t \geq 0$. Take $z_i^* \in N(S(t); z_i)$ with $i = 1,2$. Since $\psi_{S(t)} = \psi_{(\mathbb{R}_+)^m} \circ \Phi_t$, where $\Phi_t(z) := k(z) + g(u(t))$ with $k(\cdot)$ as in Lemma 4.1, the convexity of $\psi_{(\mathbb{R}_+)^m}$ and (4.5) allow us to apply the equality formula in [17, Theorem 10.6] to obtain some $y_i^* \in N((\mathbb{R}_+)^m; \Phi_t(z_i))$ such that $z_i^* = y_i^* \circ \nabla k(z_i)$. Observing that

$$\Phi_t(z_1) - \Phi_t(z_2) = \nabla k(z_2)(z_1 - z_2) + \int_0^1 (\nabla k(z_2 + s(z_1 - z_2)) - \nabla k(z_2))(z_1 - z_2)\, ds$$

we may write

$$\begin{array}{rcl} \langle z_2^*, z_1 - z_2 \rangle & = & \langle y_2^*, \Phi_t(z_1) - \Phi_t(z_2) \rangle - \langle y_2^*, \int_0^1 (\nabla k(z_2 + s(z_1 - z_2)) - \nabla k(z_2))(z_1 - z_2)\, ds \rangle \\ & \leq & 0 + \beta \|y_2^*\| \, \|z_1 - z_2\|^2. \end{array} \tag{4.9}$$

where the constant $0 \leq \beta < +\infty$ exists because of the boundedness of $\frac{\partial^2 V}{\partial x^2}(\cdot)$ which secures the boundedness of the derivative of the function $k(\cdot)$. By (4.5), as in the proof of Lemma 4.1, for any $q \in \mathbb{B}_{\mathbb{R}^m}$ there exist $q' \in \mathbb{B}_{\mathbb{R}^n}$ and $p \in (\mathbb{R}_+)^m$ such that

$$\rho \langle y_2^*, q \rangle = \langle y_2^*, \nabla k(z_2) q' + p \rangle \leq \langle z_2^*, q' \rangle \leq \|z_2^*\|$$

and hence $\|y_2^*\| \leq \frac{1}{\rho} \|z_2^*\|$. Using this and (4.9) we obtain

$$\langle z_1^* - z_2^*, z_1 - z_2 \rangle \geq -\frac{\beta}{\rho} (\|z_1\| + \|z_2\|) \|z_1 - z_2\|^2.$$

Theorem 4.1 in [16] says that $S(t)$ is r-prox-regular with a uniform constant r independent of t. So, [2, Theorem 1] yields the uniqueness.

Under the additional growth condition, it is enough to handle with [2, Theorem 1] (see the appendix). The proof is then complete. ■

Remark 5 *In [18] a class of autonomous nonlinear affine in the input systems is studied, with analytic data. The local existence and uniqueness of analytic solutions is proved. The class of systems studied in this paper and in [18] are therefore different one from each other as well as the obtained results, see the regularity conditions in Theorem 4.2 and the assumptions on the system dissipativity properties.*

The existence of a continuously differentiable storage function hinges on two system's assumptions (reachability of the state space — here with $\zeta(\cdot)$ as the input–, differentiability of the available storage [19]) which we do not recall here. We assume a little more: that $V(x)$ be C^2.

Example 1

$$\left\{ \begin{array}{l} \dot{x}(t) = -x^3(t) + \zeta(t) + (x^2(t) + 1)u(t) \\ \\ 0 \leq w(t) = x(t) + \sin(u(t)) \perp \zeta(t) \geq 0 \end{array} \right. \tag{4.10}$$

with $x(t) \in \mathbb{R}$ and $w(t) \in \mathbb{R}$. Let us choose $V(x) = \frac{1}{2}x^2$. Since $b = 1$ one obtains $h(x) = x$, so that $z = x$. One can check that the uncontrolled system in (4.10) is dissipative with storage function equal to $V(x)$ since

$$V(x(t)) - V(x(0)) = \int_0^t x(s)\zeta(s) ds - \int_0^t x^4(s) ds = -\int_0^t x^4(s) ds$$

where the last equality holds since $x(t)\zeta(t) = 0$. Applying the above transformation we get

$$-\dot{z}(t) - z^3(t) + (z^2(t) + 1)u(t) \in \partial \psi_{[-\sin(u(t)), +\infty)}(z(t)).$$

Since the vector field (the perturbation in the language of [2]) is locally Lipschitz continuous, we obtain that for any initial condition $z_0 \in [-\sin(u(0)), +\infty[$ there exists a local solution which is absolutely continuous and it is unique, provided $u(\cdot)$ is itself locally absolutely continuous.

Example 2 *Consider a system of the form*

$$\begin{cases} \dot{x}(t) = Ax(t)x^T(t)Gx(t) + B\zeta(t) + e(x(t), u(t)) \\ 0 \leq w(t) = Cx(t) + g(u(t)) \perp \zeta(t) \geq 0 \end{cases} \tag{4.11}$$

where (A, B, C) is positive real [13], $g(\cdot)$ and $e(\cdot)$ have the required regularity properties, $G \geq 0$. A storage function for the uncontrolled system is $V(x) = \frac{1}{2}x^T Px$ where $PA + A^T P \leq 0$ and $PB = C^T$, $P = P^T > 0$. Indeed we have

$$0 = \int_0^t w(s)^T \zeta(s)ds = \int_0^t x^T(s)[P\dot{x}(s) - PAx(s)x^T(s)Gx(s)]ds =$$

$$= V(x(t)) - V(x(0)) - \frac{1}{2}\int_0^t x^T(s)(PA + A^T P)x(s)x^T(s)Gx(s)ds$$

for all $t \geq 0$. The state vector change is given by $z = Rx$ with R a symmetric positive definite square root of P. The rest of the developments are like in section 3.1, and Theorem 4.2 applies.

5 Conclusion

In this paper some results in [9, 6] on existence and uniqueness of solutions of a class of nonsmooth autonomous dynamical systems, are extended to non-autonomous systems. The dissipativity property of the considered systems is used to perform a change of state vector, which allows us to transform the dynamics into a perturbed Moreau's sweeping process. Two cases are examined: when the perturbation is linear and when it is nonlinear. Then the results of [2, 3, 20] are used to prove existence and uniqueness of solutions. This work may also be seen as enlarging the studies on the relationships between various kinds of nonsmooth dynamical systems like differential inclusions, complementarity systems, projected systems, and variational inequalities, as initiated in [11, 12].

6 Appendix

6.1 $r-$prox-regular set

Let H be a real Hilbert space and $r > 0$.. A nonempty closed subset Q of H is r-prox-regular provided the distance function $d(\cdot, Q)$ is Fréchet differentiable on the open tube $\{x \in H : d(x, Q) < r\}$. (Recall that $d(x, Q) = \inf\{\|x - y\| : y \in Q\}$. Closed convex sets and C^2-submanifolds are prox-regular. See e.g. [16, 17] for several other examples as well as results of preservation of prox-regularity under operations. Roughly, prox-regular sets may be non convex sets for which the projection onto the set is uniquely defined for points close enough to the set.

The following characterization, where $N(Q; \cdot)$ denotes the limiting normal cone to Q, is extracted from Theorem 4.1 in [16]. The closed set Q is r-prox-regular if and only if for any $x_i \in Q$ $(i = 1, 2)$, the inequality

$$\langle \zeta_1 - \zeta_2, x_1 - x_2 \rangle \geq -\|x_1 - x_2\|^2$$

holds whenever $\zeta_i \in N(Q; x_i)$ with $\|\zeta_i\| < r$.

6.2 Theorem 1 of [2]

For the ease of reading let us recall Theorem 1 of [2]. Let $I = [t_0, t]$, $t_0 < t$ be an interval of $I\!R$ and $C(\cdot)$ be a set-valued map from I to the Hilbert space H. It is assumed that:

- (H1) For each $t \in I$, $C(t)$ is a nonempty closed subset of H which is $r-$prox regular;

- (H2) $C(t)$ varies in an absolutely continuous way, that is, there exists an absolutely continuous function $v(\cdot) : I \to I\!R$ such that for any $y \in H$ and $s, t \in I$ one has $|d(y, C(t)) - d(y, C(s))| \leq |v(t) - v(s)|$.

The notation $B[0, \eta]$ means the closed ball of radius η centered at 0.

Theorem 6.1 *Let $f : I \times H \to H$ be a separately measurable map on I such that*

- *(i) For every $\eta > 0$ there exists a non-negative function $k_\eta(\cdot) \in L^1(I, I\!R)$ such that for all $t \in I$ and for any $(x, y) \in B[0, \eta] \times B[0, \eta]$ one has $||f(t, x) - f(t, y)|| \leq k_\eta(t)||x - y||$;*
- *there exists a non-negative function $\beta(\cdot) \in L^1(I, I\!R)$ such that, for all $t \in I$ and for all $x \in \bigcup_{s \in I} C(s)$, $||f(t, x)|| \leq \beta(t)(1 + ||x||)$.*

Then for any $x_0 \in C(t_0)$ the following perturbed sweeping process

$$\begin{cases} -\dot{x}(t) \in N(C(t), x(t)) + f(t, x(t)) \ \ a.e.\ t \in I \\ \\ x(t_0) = x_0 \end{cases} \tag{6.1}$$

has one and only one absolutely continuous solution $x(\cdot)$. This solution satisfies $||\dot{x}(t) + f(t, x(t))|| \leq (1 + l)\beta(t) + |\dot{v}(t)|$ a.e. $t \in I$, and $||f(t, x(t))|| \leq (1 + l)\beta(t)$ a.e. $t \in I$, where

$$l = ||x_0|| + \exp\left\{\int_{t_0}^{t} \beta(s)ds\right\} \int_{t_0}^{t} [2\beta(s)(1 + ||x_0||) + |\dot{v}(s)|]\, ds.$$

6.3 Theorem 3.1 of [3]

The notation is the same as in the foregoing subsection. It is assumed that:

- (H1) For each $t \in I$, $C(t)$ is a nonempty closed subset of H which is $r-$prox regular;
- (H2) The set-valued map $C(\cdot)$ is of right continuous bounded variation on I, i.e. it is of bounded variation on I and its variation function $var_C(\cdot)$ is right continuous on I.

The Radon measure associated with $var_C(\cdot)$ is denoted as μ, so that for any $s, t \in I$ with $s \leq t$ one has $|d(y, C(t)) - d(y, C(s))| \leq \mu((s, t])$ for all $y \in H$.

Theorem 6.2 *Let $F : I \times H \to H$ be a set-valued map with nonempty convex compact values such that*

- *(i) for any $x \in H$, $F(\cdot, x)$ has a $\lambda-$measurable selection;*
- *(ii) for all $t \in I$, $F(t, \cdot)$ is scalarly upper semicontinuous on H;*
- *(iii) for some compact subsect K of the unit ball of $I\!R^n$ and for some real number $\beta \geq 0$, we have $F(t, x) \subset \beta(1 + ||x||)K$ for all $(t, x) \in I \times H$.*

Assume that $\sup_{s \in (t_0, t]} \mu(\{s\}) < \frac{r}{2}$. Then for any $x_0 \in C(t_0)$, the following sweeping process on I with perturbation

$$\begin{cases} -dx \in N(C(t), x(t)) + F(t, x(t))d\lambda \\ \\ x(t_0) = x_0 \end{cases} \tag{6.2}$$

has at least one solution $x(\cdot)$. More precisely, if $(\beta + 1)(t - t_0) \leq \frac{1}{4}$, setting $l = 2\,(\mu((t_0, t]) + ||x_0|| + 1)$, for $\nu = \mu + (l + 1)(\beta + 1)\lambda$, there exists a $\lambda-$integrable map $z : I \to H$ such that, for $\lambda-$almost all $t \in I$, $z(t) \in F(t, x(t))$ and $z(t) \in (l + 1) - (\beta + 1)\bar{co}(K \cup \{0\})$. Moreover for $\nu-$almost all $t \in I$,

$$\frac{du}{d\nu}(t) + z(t)\frac{d\lambda}{d\nu}(t) \in -N(C(t), x(t)),$$

$$\left\| \frac{du}{d\nu}(t) + z(t)\frac{d\lambda}{d\nu}(t) \right\| \leq 1$$

and

$$\left\| z(t)\frac{d\lambda}{d\nu}(t) \right\| \leq 1.$$

References

[1] S.M. Robinson, 1975 "Stability theory for systems of inequalities. Part I: Linear systems", SIAM Journal of Numerical Analysis, vol.12, pp.754-769.

[2] J.F. Edmond, L. Thibault, 2005 "Relaxation of an optimal control problem involving a perturbed sweeping process", Mathematical Programming, vol.104, no 2-3, pp.347-373, November.

[3] J.F. Edmond and L. Thibault, "BV solutions of nonconvex sweeping process differential inclusions with perturbation", Journal of Differential Equations, in press.

[4] B. Brogliato, D. Goeleven, 2004 " The Krakovskii-LaSalle invariance principle for a class of unilateral dynamical systems", Mathematics of Control, Signals and Systems, vol.17, pp.57-76.

[5] C. Castaing and M. Valadier, 1977 *Convex Analysis and Measurable Multifunctions*, Springer Berlin, Lecture Notes in Mathematics, vol. 580.

[6] D. Goeleven, B. Brogliato, 2004 "Stability and instability matrices for linear evolution variational inequalities", IEEE Transactions on Automatic Control, vol.49, no 4, pp.521-534.

[7] K. Camlibel, W.P.M.H. Heemels, J.M. Schumacher, 2002 "On linear passive complementarity systems", European Journal of Control, vol.8, no 3, pp.220-237.

[8] D. Goeleven, D. Motreanu, V.V. Motreanu, 2003 "On the stability of stationary solutions of parabolic variational inequalities", Advances in Nonlinear Variational Inequalities, vol.6, pp.1-30.

[9] B. Brogliato, 2004 "Absolute stability and the Lagrange-Dirichlet theorem with monotone multivalued mappings", Systems and Control Letters, vol.51, pp.343-353.

[10] B. Brogliato, 2003 "Some perspectives on the analysis and control of complementarity systems", IEEE Transactions on Automatic Control, vol.48, no 6, pp.918-935.

[11] B. Brogliato, A. Daniliidis, C. Lemaréchal, V. Acary, 2006 "On the equivalence between complementarity systems, projected systems and differential inclusions", Systems and Control Letters, vol.55, pp.45-51.

[12] W.P.M.H. Heemels, J.M. Schumacher, S. Weiland, 2000 "Projected dynamical systems in a complementarity formalism", Operations Research Letters, vol.27, no 2; pp.83-91.

[13] B. Brogliato, R. Lozano, B.M. Maschke, O. Egeland 2006 *Dissipative Systems Analysis and Control*, Springer London, CCE Series, second edition.

[14] J.J. Moreau, 1975 "Sur les mesures différentielles des fonctions vectorielles à variation localement bornée", Séminaire d'Analyse Convexe de Montpellier, Exposé 17.

[15] J.J. Moreau, 1977 "Evolution problem associated with a moving convex set in a Hilbert space", Journal of Differential Equations, vol. 26, pp. 347-374.

[16] R.A. Poliquin, R.T. Rockafellar, L. Thibault, 2000 "Local differentiability of distance functions", Transactions of American Mathematical Society, vol. 352, pp.5231-5249.

[17] R.T. Rockafellar, R.J.B. Wets, 1998 *Variational Analysis*, Springer, Comprehensive Studies in Mathematics, vol.317.

[18] A.J. van der Schaft, J.M. Schumacher 1998 "Complementarity modeling of hybrid systems", IEEE Transactions on Automatic Control, vol.43, pp.483-490.

[19] D.J. Hill, P.J. Moylan, 1976 "The stability of nonlinear dissipative systems", IEEE Transactions on Automatic Control, vol.21, no 5, pp.708-711, October.

[20] L. Thibault, 2003 "Sweeping process with regular and nonregular sets", Journal of Differential Equations, vol.193, pp.1-26.

[21] L. Thibault, D. Zagrodny, 1995 "Integration of subdifferentials of nonconvex functions", Journal of Mathematical Analysis and Applications, vol.189, pp. 33-58.

[22] B. Brogliato, 1999 *Nonsmooth Mechanics*, Springer London, 2nd edition.

[23] A.L. Fradkov, 1974 "Synthesis of an adaptive system of linear plant stabilization", Automat. Telemekh., no 12, pp.1960-1966.

Contents

1 Introduction **3**

2 A physical example **3**

3 Well-posedness of the dynamics **4**
3.1 State space transformation 4
3.2 Existence and uniqueness of solutions 5
3.3 Comments on the complementarity formalism and on dissipativity 9

4 Nonlinear dissipative complementarity systems **10**

5 Conclusion **14**

6 Appendix **14**
6.1 $r-$prox-regular set 14
6.2 Theorem 1 of [2] 14
6.3 Theorem 3.1 of [3] 15

Unité de recherche INRIA Rhône-Alpes
655, avenue de l'Europe - 38334 Montbonnot Saint-Ismier (France)

Unité de recherche INRIA Futurs : Parc Club Orsay Université - ZAC des Vignes
4, rue Jacques Monod - 91893 ORSAY Cedex (France)
Unité de recherche INRIA Lorraine : LORIA, Technopôle de Nancy-Brabois - Campus scientifique
615, rue du Jardin Botanique - BP 101 - 54602 Villers-lès-Nancy Cedex (France)
Unité de recherche INRIA Rennes : IRISA, Campus universitaire de Beaulieu - 35042 Rennes Cedex (France)
Unité de recherche INRIA Rocquencourt : Domaine de Voluceau - Rocquencourt - BP 105 - 78153 Le Chesnay Cedex (France)
Unité de recherche INRIA Sophia Antipolis : 2004, route des Lucioles - BP 93 - 06902 Sophia Antipolis Cedex (France)

Éditeur
INRIA - Domaine de Voluceau - Rocquencourt, BP 105 - 78153 Le Chesnay Cedex (France)
http://www.inria.fr
ISSN 0249-6399