HAL open science

Queueing algorithms with breakdowns in data bases modelling

François Baccelli, T. Znati

To cite this version:

François Baccelli, T. Znati. Queueing algorithms with breakdowns in data bases modelling. [Research Report] RR-0050, INRIA. 1980. inria-00076511

HAL Id: inria-00076511

https://inria.hal.science/inria-00076511

Submitted on 24 May 2006

HAL is a multi-disciplinary open access archive for the deposit and dissemination of scientific research documents, whether they are published or not. The documents may come from teaching and research institutions in France or abroad, or from public or private research centers.

L'archive ouverte pluridisciplinaire **HAL**, est destinée au dépôt et à la diffusion de documents scientifiques de niveau recherche, publiés ou non, émanant des établissements d'enseignement et de recherche français ou étrangers, des laboratoires publics ou privés.

Institut National
de Recherche
en Informatique
et en Automatique

Domaine de Voluceau
Rocquencourt
B.P. 105 78150 Le Chesnay
France
Tél: 954 90 20

Rapports de Recherche

N° 50

QUEUEING ALGORITHMS WITH BREAKDOWNS IN DATA BASES MODELLING

François BACCELLI
Taeib ZNATI

Décembre 1980

ALGORITHMES D'ATTENTE AVEC INTERRUPTION DE SERVICE DANS LA MODELISATION DES BASES DE DONNEES

QUEUEING ALGORITHMS WITH BREAKDOWNS IN DATA BASES MODELLING

Résumé

Cet article contient l'analyse de deux systèmes de files d'attente faisant intervenir des interruptions de service. Le principal intérêt méthodologique consiste dans l'utilisation de variables supplémentaires permettant une analyse markovienne des systèmes d'attente de ce type. Les motivations pratiques ont pour origine l'évaluation de certaines procédures utilisées dans le contrôle de cohérence (algorithmes des tickets) et dans le contrôle de la fiabilité (algorithmes de reprise) des bases de données.

Abstract

This paper contains the markovian analysis of two queueing systems submitted to service interruptions. The main theoretical interest consists in showing that the method of supplementary variables yields a tractable approach for analyzing such systems. The main practical motivations are originated in evaluating some procedures involved in coherence control (distributed control algorithms using tickets) and in reliability control (checkpointing and Rollback Recovery algorithms) of data bases.

INTRODUCTION

This paper contains the analysis of two queueing systems with breakdowns. Each of these systems may be studied in terms of an algorithm describing the succession of breakdowns and availability periods and the resulting evolution of the queue. The main theoretical interest consists in showing that the method of supplementary variables yields a tractable approach for analyzing such systems, when breakdowns have a complex structure. (the usual approach being regenerative theory GAV 62): In the first system (I.1) the occurrence and the end of the service interruptions due to breakdowns are controlled by the customer process ; In the second one (I.2), two types of breakdowns are simultaneously considered (preemptive resume and preemptive repeat).

The main practical motivations are originated in modelling and performance evaluation of data bases. The first system yields a model for "reordering queues" involved in some algorithms used to maintain coherence in distributed data bases (II.1) (However such reordering queues are involved in the distributed control of other systems, like packets switching networks, for instance). The second one yields a refined model for the static optimization of data bases operating under the checkpointing and Rollback Recovery mode (II.2).

PART I - QUEUEING ANALYSIS

In all the models of this study, it is assumed that the arrival Process of customers is Poisson and that the service they require is an independent random variable with arbitrary distribution function possessing a density and second moment.

I.1. - THE QUEUEING ALGORITHM OF FIG [1]

I.1.1. - Description of the algorithm

Consider the queueing algorithm in fig [1]. This algorithm describes the evolution of the state vector (X, N, Y) where $N \in \mathbb{N}$ is the number of customers in the queue and (X,Y) are two supplementary state variables. $X \in \{0,1\}$ describes global properties (good or bad behaviour) of the queue and Y is the amount of service already received by the customer being served in the queue (0 if the queue contains no customer). When the number of customers is at least equal to one and Y is strictly positive the queue will be said in state X = 0 [good behaviour]. It behaves exactly as a classical M/G/1 queue : Arrivals occur as an Poisson process of rate λ, so that N may increase during a service period. Departures also occur (with the infinitesimal rate $\sigma(y) = s(y)/1-S(y)$ if Y = y, S and s beeing respectively the distribution function and the density of the service distribution). At such departure instants N is decreased by one and Y becomes 0. If N does not become 0 (when decreased by one), one amongst two possible evolutions is to be chosen by the system : either to remain in state X = 0, in which case it begins to give service to at least one of those customers waiting ; or to jump in state X = 1, in which case it begins a breakdown period during which no service can be delivered to any customer. This choice has to be made by the system just after a departure instant for which N > 0, and is assumed to be taken in function of the state (X,N,Y) at this moment : Assume it is (X=0, N=n, Y=0), then, with probability $r(o,n,o) \triangleq \alpha(n)$, the transition in X = 1 occurs, and with probability $1 - \alpha(n)$ the system remains in state X = 0.

When in state X = 1 (i.e., as long as the breakdown has not terminated), N = n, Y = 0, **transitions** outside this state occur only at arrival dates (Poisson process of rate λ). Again, with probability $r(1,n,0) \triangleq \beta(n)$ (which is a function of the state just before this arrival) this transition leads to state (X = 1, N = n+1, Y = 0) and with probability $1 - \beta(n)$ to state ($X = 0$, $N = n+1$, $Y = 0^+$)(0^+ because a new service begins at once).

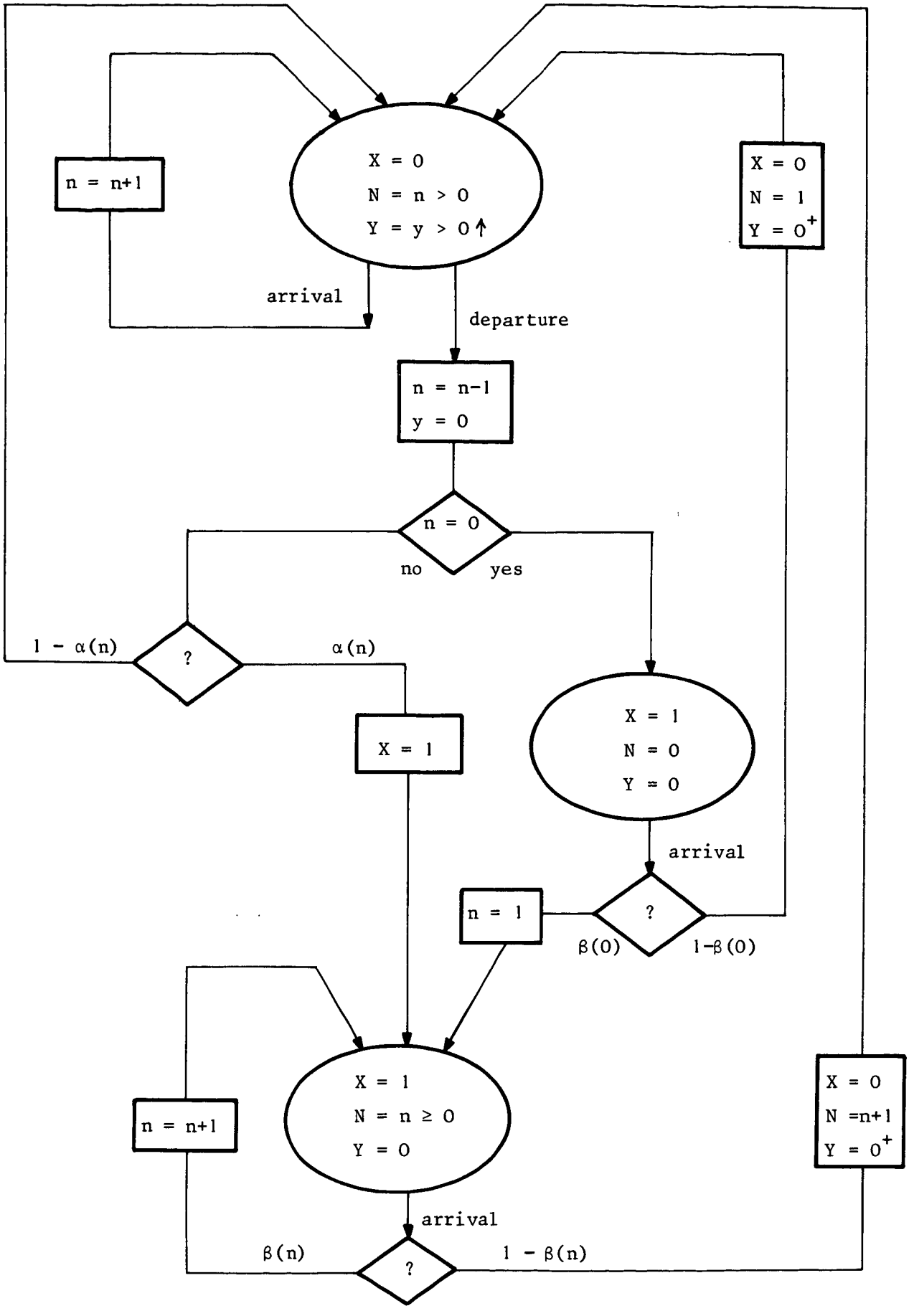
X = 0
N = n > 0
Y = y > 0↑
n = n+1
arrival
departure
X = 0
N = 1
Y = 0+
n = n-1
y = 0
n = 0
no
yes
1 - α(n)
?
α(n)
X = 1
X = 1
N = 0
Y = 0
arrival
n = 1
?
β(0)
1-β(0)
X = 1
N = n ≥ 0
Y = 0
n = n+1
X = 0
N =n+1
Y = 0+
arrival
β(n)
?
1 - β(n)

Figure 1

To complete the description of the algorithm, we have now to precise the system evolution when $N = 0$, just after the departure of a customer. In that case, we choose arbitrarily to say that $X = 1$. Sojourn in state $(X = 1, N = 0, Y = 0)$ terminates at the date of the next arrival. Similarly to the previous case, with probability $\beta(o)$, this arrival produces a transition in state $(X = 1, N = 1, Y = 0)$ and with probability $1 - \beta(o)$ in state $(X = 0, N = 1, Y = 0^+)$.

I.1.2. - Kolmogorov's equations

Let $\{Z_t = (X_t, N_t, Y_t)\ t \in \mathbb{R}^+\}$ be the state of the queueing system at time t. This process is markovian (its state space is $\{0,1\} \times \mathbb{N} \times \mathbb{R}^+$). Assume that the law of Z_t converges to a stationary law on $\{0,1\} \times \mathbb{N} \times \mathbb{R}^+$ when $t \to \infty$ and consider :

$$(1)\quad \begin{cases} p(0,n,y) = \lim\limits_{dy \to o} \dfrac{1}{dy} P\,[X_t=0,\ N_t=n,\ y \le Y_t < y + dy] \\ n \ge 1 \\ y \ge 0 \\ p(1,n) = P[X_t=1,\ N_t=n,\ Y_t=0] \\ n \ge 0 \end{cases}$$

(these functions are defined at steady state and do not depend of time t). Kolmogorov's equations at steady state yield :

$$(2)\quad \begin{cases} n \ge 2\ ,\ y > 0 \\ \dfrac{\partial}{\partial y} p(0,n,y) = \lambda p(0,n-1,y) - (\lambda+\sigma(y))\ p(0,n,y) \end{cases}$$

$$(3)\quad \begin{cases} y > 0 \\ \dfrac{\partial}{\partial y} p(0,1,y) = -\ (\lambda+\sigma(y))\ p(0,1,y) \end{cases}$$

$$(4)\quad \lambda\ p(1,0) = \int_0^\infty p(0,1,y)\sigma(y)dy$$

$$(5)\qquad \begin{cases} \lambda p(1,n) = \int_0^\infty p(0,n+1,y)\sigma(y)dy\ \alpha(n) + \lambda\beta(n-1)p(1,n-1) \\ n \geq 1 \end{cases}$$

$$(6)\qquad \begin{cases} p(0,n,0) = \int_0^\infty p(0,n+1,y)\sigma(y)\ dy\ (1 - \alpha(n)) \\ \qquad\qquad + \lambda(1 - \beta(n-1))\ p(1,n-1) \\ n \geq 1 \end{cases}$$

Consider now for $Z \in \mathbb{C}$, $|Z| \leq 1$

$$(7)\qquad R_o(Z,y) = \sum_{n=1}^{\infty} p(0,n,y)\ Z^n$$

$$(8)\qquad R_1(Z) = \sum_{n=1}^{\infty} p(1,n)\ Z^n$$

$$(9)\qquad Q_o(Z) = \int_0^\infty \sum_{n=1}^{\infty} \alpha(n)\ p(0,n+1,y)\ Z^n\ \sigma(y)dy$$

$$(10)\qquad Q_1(Z) = \sum_{n=1}^{\infty} \beta(n)\ p(1,n)\ Z^n$$

We obtain from (2), (3) :

$$\frac{\partial}{\partial y} R_o(Z,y) = -\ (\lambda\ (1-Z) + \sigma(y))\ R_o(Z,y)$$

therefore :

$$(11)\qquad R_o(Z,y) = R_o(Z,0)\ \exp\left[-\ \lambda y(1-Z) - \int_0^y \sigma(u)\ du\right]$$

Which yields (we note $S^*(u)$, $u \in \mathbb{C}$, $Re(u) > 0$, the Laplace transform of S) :

$$(12)\qquad \int_0^\infty R_o(Z,y)\sigma(y)dy = R_o(Z,0)\ S^*(\lambda(1-Z))$$

$$(13)\qquad \int_0^\infty R_o(Z,y) = R_o(Z,0)\ .\ \frac{1 - S^*(\lambda(1-Z))}{\lambda(1-Z)} \triangleq R_o(Z)$$

Now, the remaining equations lead to the following system of equations :

$$(14)\quad \begin{cases} R_o(Z,0)\left(1 - \dfrac{S^*(\lambda(1-Z))}{Z}\right) = -Q_o(Z) - \lambda Z\, Q_1(Z) \\ \qquad + \lambda Z\, R_1(Z) + \lambda((1-\beta(0))Z - 1)\, p(1,0) \\ \lambda R_1(Z) = Q_o(Z) + \lambda Z\, Q_1(Z) + \lambda Z\, \beta(0)\, p(1,0) \end{cases}$$

Where all of the functions $R_o(Z,0)$, $R_1(Z)$, $Q_o(Z)$, $Q_1(Z)$ and the constant $p(1,0)$ are unknown.

The next sections give examples, involving constant and geometric functions, for which closed form solution of equation (14) may be obtained, as well as conditions for existence and unicity of this solution.

I.1.3. - Constant functions

Theorem [1] : Let $0 \le \alpha < 1$ and $0 \le \beta < 1$ such that $\alpha + \beta < 1$ and assume that $\{\alpha(n) = \alpha,\ n \ge 1\}$ and $\{\beta(n) = \beta,\ n \ge 0\}$. $\{Z_t = (X_t, N_t, Y_t),\ t \in IR^+\}$ is ergodic if and only if $\rho = \frac{\lambda}{\mu}$ satisfies :

$$(15)\qquad 0 \le \rho < 1 - \frac{\alpha}{1-\beta}$$

When this condition is fulfilled, the generating function of the stationary marginal distribution of the number of customers in the system $Q(Z)$ is given by :

$$(16)\quad \begin{cases} Q(Z) = p(1,0)\left\{ \dfrac{1-\alpha}{1-\beta Z} + \left(\dfrac{1-S^*(\lambda(1-Z))}{(1-Z)} + \dfrac{\alpha S^*(\lambda(1-Z))}{Z(1-\beta Z)}\right) \cdot \dfrac{\theta(Z)}{Z(1-\beta Z) - \varphi(Z) S^*(\lambda(1-Z))} \right\} \\ p(1,0) = \dfrac{(1-\beta)(1-\rho) - \alpha}{1-\alpha} \\ \theta(Z) = Z[(1-\beta Z)((1-\beta)Z + \alpha - 1) + Z(1-\beta)(\beta Z - \alpha)] \\ \varphi(Z) = (1-\alpha)(1-\beta Z) + \alpha Z(1-\beta) \end{cases} \qquad \square$$

Proof : Assume that Z_t is ergodic. There exists a stationary solution to Kolmogorov's equations satisfying equation (14). With our assumptions on $\alpha(n)$ and $\beta(n)$, only two unknown functions remain in (14) : $R_o(Z,0)$, $R_1(Z)$ (plus $p(1,0)$ which is also unknown). Direct substitutions in the system yield :

$$\begin{cases} R_o(Z,0) = p(1,0) \dfrac{\lambda\ \theta(Z)}{Z(1-\beta Z) - \varphi(Z)\ S^*(\lambda(1-Z))} \\ R_1(Z) \quad = R_o(Z,0)\ .\dfrac{\alpha S^*(\lambda(1-Z))}{\lambda Z(1-\beta Z)} + p(1,0)\ \dfrac{\beta Z - \alpha}{1 - \beta Z} \end{cases}$$

Furthermore :

$$Q(Z) = p(1,0) + R_1(Z) + R_o(Z).$$

Using (13), we see that Q(Z) must be as given in equation (16), in which p(1,0) is determined by the necessary condition Q(1) = 1 (and l'Hospital's rule) :

$$p(1,0) = \frac{(1-\beta)\ (1-\rho) - \alpha}{1 - \alpha}$$

p(1,0) must be strictly positive. Therefore ρ satisfies $\rho < 1 - \frac{\alpha}{1-\beta}$. This quantity being positive only for α and β such that $\alpha + \beta < 1$.

This proves the necessity of condition (15). To prove its sufficiency we shall show that a Markov chain imbedded in the process Z_t is ergodic when it is satisfied.

Let Z_n be the state Z_t at $t = T_n$, just after the nth departure and before the α-test following it. We have : $Z_n = (0,N_n,0)$. Let us show that the irreducible aperiodic Markov chain N_n is ergodic when ρ satisfies (15). Using PAKES lemma (PAK69), this will be proved if we show that :

$$\begin{cases} \text{(i)} \quad |E[N_{i+1} - N_i | N_i = j]| < \infty \qquad \forall\ j \in \mathbb{N} \\ \text{(ii)} \quad \limsup_{j \to \infty} [E\ N_{i+1} - N_i | N_i = j] < 0. \end{cases}$$

Consider the following expression :

$$N_{i+1} - N_i = A_{]T_i,\ T_{i+1}]} - D_{]T_i,\ T_{i+1}]}$$

Where $A_{]s,t]}$ (resp. $D_{]s,t]}$) is the number of arrivals (resp. departures) in interval]s,t] . We have :

$$D_{]T_i,T_{i+1}]} = E(D_{]T_i,T_{i+1}]}) = 1$$

$$E[A_{]T_i,T_{i+1}]}|N_i = j] = \lambda \quad E[T_{i+1} - T_i|N_i = j].$$

Furthermore :

$$E[T_{i+1} - T_i|N_i = 0] = \frac{1}{\lambda} + \frac{1-\beta}{\mu} + \beta\ E[T_{i+1} - T_i|X_{T_i^+} = 1]$$

$$E[T_{i+1} - T_i|N_i > 0] = (1-\alpha)\ \frac{1}{\mu} + \alpha\ E[T_{i+1} - T_i|X_{T_i^+} = 1]$$

$$E[T_{i+1} - T_i|X_{T_i^+} = 1] = (1-\beta) \sum_{n=1}^{\infty} \beta^{n-1}\ [\frac{1}{\mu} + \frac{n}{\lambda}] = \frac{1}{\mu} + \frac{1}{\lambda(1-\beta)}$$

So that condition (i) is fulfilled. Now, whenever $\rho < 1 - \frac{\alpha}{1-\beta}$ (for α and β such that $\alpha + \beta = 1$) :

$$\limsup_{j \to \infty} E[N_{i+1} - N_i|N_i = j] = \rho + \frac{\alpha}{1-\beta} - 1 < 0$$

This completes the proof. □

Direct differenciation yields the stationary mean value of N : $\bar{N}$:

$$(17) \quad \left\{ \begin{array}{l} \bar{N} = \dfrac{(1-\alpha)\ [(2\rho + \lambda^2\ \overline{S^2}) - \rho\ \psi'']}{2\ \psi'^2} \\ \quad + \dfrac{\alpha(1-\alpha)\ [2(1+(1-\beta)\rho)\psi' + (1-\beta)\psi'']}{2(1-\beta)^2\ \psi'^2} + \dfrac{\beta(1-\alpha)}{(1-\beta)^2} \\ \psi(Z) \triangleq \lambda Z(1-\beta Z)(Z(1-\beta Z) - \varphi(Z)\ S^*(\lambda-\lambda Z)). \\ \psi' \triangleq \dfrac{d\psi(Z)}{dZ}\Big|_{Z=1} \\ \psi'' \triangleq \dfrac{d^2\psi(Z)}{dZ^2}\Big|_{Z=1} \end{array} \right.$$

$$\bar{S}^2 = \frac{d^2S^*(\omega)}{d\omega^2}\Big|_{\omega=0}$$

I.1.4. - Constant and geometric functions

Theorem [2] : Let $0 \le \alpha < 1$, $0 \le \beta < 1$ and assume that $\{\alpha(n) = \alpha^n,\ n \ge 1\}$ $\{\beta(n) = \beta,\ n \ge 0\}$. Z_t is ergodic if and only if $\rho < 1$. When this condition is fulfilled, the generating function $Q(Z)$ of the number of customers in the system at steady state is the following infinite product :

$$(18)\quad \begin{cases} Q(Z) = \prod_{i=o}^{\infty} \dfrac{PK_S(\alpha^i Z)}{PK_S(\alpha^i)} \prod_{i=o}^{\infty} \dfrac{M_\beta(\alpha^i Z)}{M_\beta(\alpha^i)} & Z \in [0,1] \\[2ex] PK_S(Z) = \dfrac{(1-\rho)(1-Z)\ S^*(\lambda(1-Z))}{S^*(\lambda(1-Z)) - Z} \\[2ex] M_\beta(Z) = \dfrac{1-\beta}{1-\beta Z} \end{cases} \qquad \square$$

Proof : Assume that Z_t is ergodic. This implies the existence of a stationary solution to Kolmogorov's equations. Equations (14) become :

$$(19)\quad \begin{cases} R_o(Z,0) = \dfrac{1}{Z}\ R_o(Z,0)\ S^*(\lambda(1-Z)) \\ \qquad - \dfrac{1}{\alpha Z} R_o(\alpha Z,0) S^*(\lambda(1-\alpha Z)) + \lambda Z\ (1-\beta)(R_1(Z) + p(1,0)) \\[2ex] [R_1(Z) + p(1,0)]\ \lambda(1-\beta Z) = \dfrac{1}{\alpha Z}\ R_o(\alpha Z,0)\ S^*(\lambda(1-\alpha Z)) \end{cases}$$

Let us choose $F(Z) = R_o(Z,0)$ as our main unknown function. (which depends of a great number of parameters : α, β, λ, S^*). Direct substitutions in (18) yield that $F(Z)$ is solution of the following key equation :

$$(20)\quad \begin{cases} F(Z) = G(Z)\ F(\alpha Z) & \forall Z\ ,\ 0 \le Z \le 1 \\[2ex] G(Z) = \dfrac{Z-1}{Z - S^*(\lambda(1-Z))} \cdot \dfrac{S^*(\lambda(1-\alpha Z))}{\alpha(1-\beta Z)} \end{cases}$$

The generating function of interest, i.e. $Q(Z) = p(1,0) + R_1(Z) + R_o(Z)$, is a very simple function of $F(Z)$:

$$(21)\qquad Q(Z) = F(Z)\ .\ \frac{S^*(\lambda(1-Z))}{\lambda Z}$$

We know from Takacs lemma (TAK 62 p.47) that, if $\rho > 1$, $\exists\, Z_o \in [0,1[\ /\ Z_o = S^*(\lambda(1-Z_o))$; So that the key equation has no analytical solution in the unit circle. From now, assume $\rho \leq 1$.

Consider now equation (19) where F(Z) is supposed to be a generating function. We have the following property :

$$F(\varepsilon) = F'(\varepsilon)\ \varepsilon + O(\varepsilon)$$

Equation (19) yields :

$$(22)\quad \left\{ \begin{array}{l} F(Z) = F(\alpha^{n+1}Z)\ .\ \prod_{i=0}^{n} G(\alpha^i Z) \\ \qquad = [\alpha^{n+1}Z\ F'(0) + O(\alpha^{n+1}Z)].P_{1,n}(Z).P_{2,n}(Z)\ \dfrac{S^*(\lambda(1-\alpha^{n+1}Z))}{\alpha^{n+1}.S^*(\lambda(1-Z))} \\ \text{with} \\ P_{1,n}(Z) = \prod_{i=0}^{n} \dfrac{S^*(\lambda(1-\alpha^i Z))}{S^*(\lambda(1-\alpha^i Z)) - \alpha^i Z} \triangleq \prod_{i=0}^{n} a_i(Z) \\ P_{2,n}(Z) = \prod_{i=0}^{n} \dfrac{1-\alpha^i Z}{1-\alpha^i \beta Z} \end{array} \right.$$

We prove now that, when $\rho \in [0,1]$, each of the products $P_{1,n}(Z)$ and $P_{2,n}(Z)$ converges towards a limit. Because $\rho \leq 1$, we know from Takacs lemma that $S^*(\lambda(1-\alpha^i Z)) - \alpha^i Z \geq 0$, $\forall\ i \geq 0$, $\forall\ Z \in [0,1]$, the equality being only for $i = 0$ and $Z = 1$. So that $\forall i \geq 0$, $\forall Z \in [0,1[$, $\exists \log(a_i(Z))$. Furthermore $\log a_i(Z) \underset{i \to \infty}{\sim} \dfrac{\alpha^i Z}{S^*(\lambda)}$. We have proved the following :

$$\exists\, P_1(Z) = \lim_{n\to\infty} P_{1,n}(Z) \qquad 0 < Z < 1$$

Simple considerations yield also :

$$\exists\, P_2(Z) = \lim_{n\to\infty} P_{2,n}(Z) \qquad 0 < Z \leq 1$$

Taking the limit over n in (21), we obtain : $\forall\ Z \in [0,1[$

$$Q(Z) = \frac{F'(0).S^*(\lambda)}{\lambda}\ .\ P_1(Z)\ .\ P_2(Z)$$

The unknown constant $F'(0)$ has to be determined from the necessary condition $Q(1) = 1$. This is only possible when $\rho < 1$ and yields for $Q(Z)$ the formula in theorem 2.

The proof for sufficiency is very similar to the one in theorem [1]. Pakes lemma applies for the same sequence of stopping times $\{T_n, n \in \mathbb{N}\}$: We have :

$$E[T_{i+1} - T_i | N_i = 0] = \frac{1}{\lambda} + \frac{1-\beta}{\mu} + \beta\, E[T_{i+1} - T_i | X_{T_i^+} = 1]$$

$$E[T_{i+1} - T_i | N_i = j] = (1-\alpha^j)\frac{1}{\mu} + \alpha^j\, E[T_{i+1} - T_i | X_{T_i^+} = 1]$$

$$E[T_{i+1} - T_i | X_{T_i^+} = 1] = \frac{1}{\mu} + \frac{1}{\lambda} \cdot \frac{1}{1-\beta}$$

Condition (i) of Pakes lemma is satisfied. Furthermore :

$$\limsup_{\to \infty} E[N_{i+1} - N_i | N_i = j] = -1 + \rho < 0 \qquad \square$$

<u>Corollary</u> [3] : When the service distribution function is exponential :

$$(23) \quad \begin{cases} Q(Z) = \dfrac{\exp(A(Z))}{\exp(A(1))} \\[2ex] A(Z) = \displaystyle\sum_{k=1}^{\infty} Z^k \frac{\beta^k + \rho^k}{k(1-\alpha^k)} \end{cases} \qquad \square$$

<u>Proof</u> : Take $S^*(\omega) = \frac{\mu}{\mu+\omega}$ in the last theorem. $\square$

The stationary mean value, $\bar{N}$ is given by :

$$(24) \quad \begin{cases} \bar{N} = \displaystyle\sum_{i=0}^{\infty} \frac{a_i}{PK_S(\alpha^i)} + \frac{b_i}{M_\beta(\alpha^i)} \\[2ex] a_i = \dfrac{d}{dZ} PK_S(\alpha^i Z)\big|_{Z=1} \\[2ex] b_i = \dfrac{d}{dZ} M_\beta(\alpha^i Z)\big|_{Z=1} \end{cases}$$

in the exponential case :

$$(25) \quad \begin{cases} \bar{N} = \displaystyle\sum_{k=1}^{\infty} \frac{\rho^k + \beta^k}{1 - \alpha^k} \\[2ex] \quad \sim \dfrac{\rho}{1-\rho} + \dfrac{\beta}{1-\beta} + \dfrac{\alpha\rho}{1-\alpha\rho} + \dfrac{\alpha\beta}{1-\alpha\beta} \qquad \text{if } \alpha \ll 1 \end{cases}$$

I.2. - THE QUEUEING ALGORITHM OF FIG [2]

I.2.1. - Description of algorithm

The state variables are $\{X,N,Y\}$; $X \in \{0,1,2\}$ is the system macro-state - 0 for availability, 1 for type 1-unavailability, 2 for type 2-unavailability.

When the system is in macro-state 0, type 1-failures (resp. type 2-failures) occur, independantly of the other state variables N and Y, as an independant homogenous Poisson process of parameter γ_1 (resp. γ_2). $N \in \mathbb{N}$ is the number of customers in the queue and $Y \in \mathbb{R}^+$ is the amount of service already received by the customer being served (0 if $N = 0$). When a type 1-failure occurs, the actual service (if there is one) is interrupted. The system jumps in state $(X = 1, N = n, Y = y)$ in which no service can be delivered. Transitions from this state occur either with a new arrival towards state $(X = 1, N = n+1, Y = y)$, or with the end of the unavailability period (which is an independant exponential r.v with rate τ_1) towards state $(X = 0, N = n, Y = y)$. In the last case, the amount of service already received by the customer when interrupted is resumed and its service restarts immediatly from $Y = y$. Type 2-unavailability periods have a similar structure but the amount of service already received by an interrupted customer is destroyed so that this customer has to restart from $Y = 0$ after the end of the unavailability period.

I.2.2. - Kolmogorov's equation

$\{Z_t = (X_t, N_t, Y_t),\ t \in \mathbb{R}^+\}$ is a Markov process with state space $\{0,1,2\} \times \mathbb{N} \times \mathbb{R}^+$. Assume that Z_t converges towards a stationary process when $t \to \infty$. Consider, at steady state :

$$(1) \qquad p(j,n,y) \triangleq \lim_{dy \to 0} \frac{1}{dy} P[X_t = j,\ N_t = n,\ y < Y_t \leq y + dy] \qquad \begin{array}{l} y \geq 0 \\ n \geq 1 \\ j = 0,1 \end{array}$$

$$(2) \qquad p(j,n,0^*) \triangleq P[X_t = j,\ N_t = n,\ Y_t = 0] \qquad n \geq 0,\ j = 0,1,2$$

Kolmogorov's equations yield :

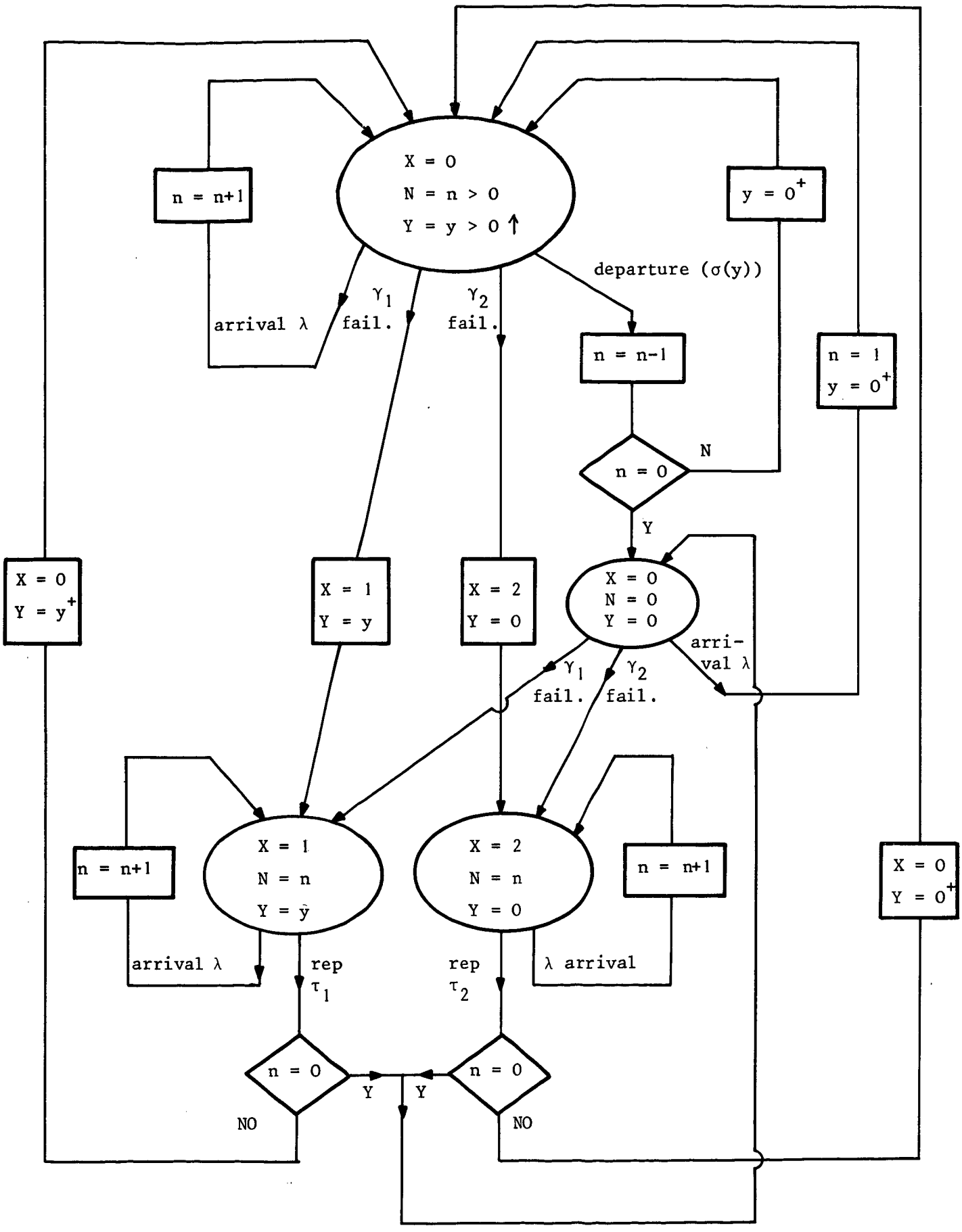
X = 0
N = n > 0
Y = y > 0 ↑
n = n+1
y = 0+
arrival λ
γ1 fail.
γ2 fail.
departure (σ(y))
n = n-1
n = 1
y = 0+
n = 0
N
Y
X = 0
Y = y+
X = 1
Y = y
X = 2
Y = 0
X = 0
N = 0
Y = 0
arri-val λ
γ1 fail.
γ2 fail.
n = n+1
X = 1
N = n
Y = ỹ
X = 2
N = n
Y = 0
n = n+1
X = 0
Y = 0+
arrival λ
rep τ1
rep τ2
λ arrival
n = 0
Y
Y
n = 0
NO
NO

Figure 2

$$(3)\quad \begin{cases} \frac{\partial}{\partial y} p(0,n,y) = -(\lambda+\gamma_1+\gamma_2+\sigma(y))p(0,n,y) + \lambda p(0,n-1,y) \\ \qquad\qquad + \tau_1 p(1,n,y) \\ y > 0 \end{cases}$$

$$(4)\quad \begin{cases} \frac{\partial}{\partial y} p(0,1,y) = -(\lambda+\gamma_1+\gamma_2+\sigma(y))p(0,1,y) + \tau_1\, p(1,1,y) \\ y > 0 \end{cases}$$

$$(5)\quad \begin{cases} p(0,n,0) = \int_0^\infty p(0,n+1,u)\sigma(u)du + \tau_1\, p(1,n,0^*) + \tau_2\, p(2,n,0^*) \\ n \geq 2 \end{cases}$$

$$(6)\quad \begin{cases} p(0,1,0) = \int_0^\infty p(0,2,u)\sigma(u)du + \lambda p(0,0,0^*) + \tau_1\, p(1,1,0^*) \\ \qquad\qquad + \tau_2\, p(2,1,0^*) \end{cases}$$

$$(7)\quad \begin{cases} p(0,0,0^*)\,(\lambda+\gamma_1+\gamma_2) = \int_0^\infty p(0,1,u)\sigma(u)du + \tau_1\, p(1,0,0^*) \\ \qquad\qquad + \tau_2\, p(2,0,0^*) \end{cases}$$

$$(8)\quad \begin{cases} (\lambda+\tau_1)\, p(1,n,y) = \lambda\, p(1,n-1,y) + \gamma_1\, p(0,n,y) \\ n \geq 2, \quad y \geq 0 \end{cases}$$

$$(9)\qquad (\lambda+\tau_1)\, p(1,1,y) = \gamma_1\, p(0,1,y) \quad , \quad y \geq 0$$

$$(10)\qquad p(1,n,0^*)\,(\lambda+\tau_1) = \lambda\, p\,(1,n-1,0^*),\ n \geq 1$$

$$(11)\qquad (\lambda+\tau_1)\, p(1,0,0^*) = \gamma_1\, p(0,0,0^*)$$

$$(12)\qquad (\lambda+\tau_2)\, p(2,n,0^*) = \gamma_2 \int_0^\infty p(0,n,y)dy + \lambda\, p(2,n-1,0^*),\ n \geq 1$$

$$(13)\qquad (\lambda+\tau_2)\, p(2,0,0^*) = \gamma_2\, p(0,0,0^*)$$

Let, for $Z \in \mathbb{C}$, $|Z| \leq 1$:

$$(14)\quad \begin{cases} G_k(Z,y) \triangleq \sum_{n\geq 1} Z^n\, p(k,n,y) & y \geq 0,\ k = 0,1 \\ G_1(Z,0^*) \triangleq \sum_{n\geq 1} Z^n\, p(1,n,0^*) \\ G_2(Z,0^*) \triangleq \sum_{n\geq 0} Z^n\, p(2,n,0^*) \end{cases}$$

We have :

$$(15)\quad \begin{cases} \frac{\partial}{\partial y} G_o(Z,y) = -(\lambda(1-Z) + \gamma_1 + \gamma_2)\, G_o(Z,y) & y > 0 \\ \qquad + \tau_1\, G_1(Z,y) \end{cases}$$

$$(16)\quad \begin{cases} G_o(Z,0) = \frac{1}{Z} \int_0^\infty G_o(Z,y)\sigma(y)\, dy - p(0,0,0^*)(\lambda(1-Z) + \gamma_1 + \gamma_2) \\ \qquad + \tau_1[G_1(Z,0^*) + p(1,0,0^*)] + \tau_2\, G_2(Z,0^*) \end{cases}$$

Furthermore :

$$G_1(Z,y) = G_o(Z,y) \cdot \frac{\gamma_1}{\tau_1 + \lambda(1-Z)} \qquad y \geq 0$$

$$G_1(Z,0^*) + p(1,0,0^*) = p(0,0,0^*)\, \frac{\gamma_1}{\tau_1 + \lambda(1-Z)}$$

$$G_2(Z,0^*) = \frac{\gamma_2}{\tau_2 + \lambda(1-Z)} [p(0,0,0^*) + \int_0^\infty G_o(Z,y)dy]$$

Let :

$$(17)\quad \begin{cases} A(Z) = \lambda(1-Z) + \sum_{i=1}^{2} \gamma_i \left(1 - \frac{\tau_i}{\tau_i + \lambda(1-Z)}\right) \\ E(Z) = \lambda(1-Z) + \gamma_2 + \gamma_1 \left(1 - \frac{\tau_1}{\tau_1 + \lambda(1-Z)}\right) \end{cases}$$

We have :

$$(18)\quad \begin{cases} G_o(Z,y) = G_o(Z,0).\exp[-E(Z)y + \int_0^y \sigma(u)du] \\ G_o(Z,0) = \frac{1}{Z} \int_0^\infty G_o(Z,y)\sigma(y)dy - A(Z)\, p(0,0,0^*) \\ \qquad + (E(Z) - A(Z)) \int_0^\infty G_o(Z,y)dy \end{cases}$$

Consider now :

$$H_o(Z) = \int_0^\infty G_o(Z,y)dy + p(0,0,0^*)$$

(18) yields :

$$H_o(Z) = p(0,0,0^*) \frac{(1-Z)\ E(Z)\ .\ S^*(E(Z))}{(1-Z)E(Z)S^*(E(Z)) - Z\ A(Z)(1-S^*(E(Z))} \tag{19}$$

So that the generating function of the number of customers in the system at steady state Q(Z) is :

$$Q(Z) = H_o(Z)\ [1 + \sum_{i=1}^{2} \frac{\gamma_i}{\tau_i+\lambda(1-Z)}] \tag{20}$$

I.2.3. - <u>The equivalent service</u>

Let $\omega \in \mathbb{C}$, $Re(\omega) > 0$ and :

$$\begin{cases} \varepsilon(\omega) = \omega + \gamma_2 + \gamma_1\ (1 - \frac{\tau_1}{\tau_1+\omega}) \\ \alpha(\omega) = \omega + \sum_{i=1}^{2} \gamma_i\ (1 - \frac{\tau_i}{\tau_i+\omega}) \end{cases} \tag{21}$$

We call equivalent service law the distribution function on $\mathbb{R}^+$ with Laplace transform $T^*(\omega)$:

$$\begin{cases} T^*(\omega) = \dfrac{S^*(\varepsilon(\omega))\ \varepsilon(\omega)}{\varepsilon(\omega) - (1 - S^*(\varepsilon(\omega)))(\varepsilon(\omega) - \alpha(\omega))} \\ t = -\ T'(\omega)\big|_0 = \dfrac{(1 + \frac{\gamma_1}{\tau_1} + \frac{\gamma_2}{\tau_2})\ (1 - S^*(\gamma_2))}{\gamma_2\ S^*(\gamma_2)} \end{cases} \tag{22}$$

<u>Theorem [3]</u> : $\{Z_t,\ t \in \mathbb{R}^+\}$ is ergodic if and only if :

$$\lambda t < 1 \tag{23}$$

When this condition is fulfilled :

(24) $$Q(Z) = PK_T(Z) \cdot \frac{L(Z)}{L(1)} \qquad Z \in \mathbb{C},\ |Z| \leq 1$$

with :

(25) $$\begin{cases} PK_T(Z) = \dfrac{(1-\lambda t)\ (1-Z)\ T^*(\lambda(1-Z))}{T^*(\lambda(1-Z)) - Z} \\ L(Z) = 1 + \sum_{i=1}^{2} \dfrac{\gamma_i}{\tau_i + \lambda(1-Z)} \end{cases}$$ □

Proof : From (22), one obtains $S^*(\lambda(1-Z))$ as a function of $T^*(\lambda(1-Z))$. Using this in equation (19) yields :

$$H_o(Z) = p(0,0,0^*)\ \frac{(1-Z)\ .\ T^*(\lambda(1-Z))}{T^*(\lambda(1-Z)) - Z}$$

$$= \frac{p(0,0,0^*)}{1 - \lambda t}\ .\ PK_T(Z)$$

The necessary condition $Q(1) = 1$ in equation (20) gives :

(26) $$p(0,0,0^*) = \frac{1 - \lambda t}{L(1)}$$

The necessity of condition (23) for ergodicity is also proved. Pakes Lemma, applied exactly as in section II, proves its sufficiency. □

Remark : In each of the queueing systems we analyzed, the stopping times of intrance in state N=0 are regeneration points for the stochastic process N_t. Therefore Little's formula is valid.

PART II - APPLICATIONS TO DATA BASES MODELLING

II.1. - PERFORMANCE EVALUATION OF SOME COHERENCE CONTROL ALGORITHMS IN DISTRIBUTED DATA BASE

II.1.1. - Mutual coherence control in fully duplicate distributed data bases

A fully duplicate distributed data base includes four elements (fig. 3)

- A data base, (i.e. a collection of data units) duplicated over several devices.
- A set of storage processors, (one per device), responsible for physical data handling on these devices.
- A set of processors called producers, in charge of running updates submitted by users accessing the data units.
- A transmission medium (for instance a packet switching network).

Updates may be submitted from any producer and have to be processed on each of the storage processors. The mutual coherence requirement consists in having the same sequences of updates processed on each of the storage processors. This may be achieved by many types of algorithms [ELL 77], [GEL 78], [LEL 78], [HER 79]. Section I.1 is devoted to performance evaluation of those algorithms involving reordering procedures.

II.1.2. - Example of reordering queues in coherence control algorithms using tickets

We sketch as example the principle of one of the algorithms achieving coherence by mean of ticketing and reordering procedures [LEL 78].

This algorithm is using a virtual ring configuration in which each producer has an identity i, a predecessor of identity (i-1) and successor of identity (i+1). A unique particular message, the control token, circulates on the ring. It transports morked tickets : 0,1,2... when a producer has the control token, it picks up enough tickets and supplies each update with a ticket before sending it through the transmission medium towards each of the storage processors. One can check that a strategy of updates consumption of each storage processor realized according to a strict increasing order of tickets insures mutual coherence in the data base. We call reordering queue any queueing system with marked customers and such a scheduling strategy.

II.1.3. - Markovian approximation for M/G/1 reordering queues

A formal definition for the queueing system described in Section II.1.2 would be the following :

Let $\{C_n, n \in N\}$ be the nth customer arriving in a queue during the time interval $[0,\infty]$. Let d, be a bijection $N \to N$ called the disorder function, which assigns to customer C_n an integer valued mark $k_n = d(C_n)$. A reordering queue with disorder d is defined by the following scheduling strategy : when the customer with mark k has completed its service, the next customer to be served is the one with mark k+1.

However, this formal approach has two major inconvenients for our purpose : Firstly a queue defined as above can not be analyzed in terms of usual priority queues, even with an infinite number of classes (Clearly, because of disorder d, customer k may be absent and even remain absent after new arrivals. In such a case, the server must suspend its service and wait for k. Due to a such a non-availability phenomenon, reordering queue may not be analyzed as usual priority queues). Secondly, it is very difficult to determine the analytical properties of a disorder function resulting of transmission delays (the problem of determining the joint distribution of the delays of several customers, even through a simple Jackson network is an open question. LEM 77, MIT 79). Therefore, we propose an heuristic approach, based on a "markovian approximation", which consists in looking at the reordering queue in some "aggregated state space" (which does not include the set of all the marks present in

the queue) and in taking into account the first order effects of disorder on the evolution of the queue in this sate space.

Let $Z = (X,N,Y)$ be this aggregated state vector in the M/G/1 case; $x \in \{0,1\}$, $N \in N$, $Y \in R^+$ are defined as in section I.1.1 (part I). Consider now the intervention of disorder in terms of the answers (with state space Y,N) to the following questions :

A_k : Customer k-1 has just completed its service; Is customer k among the queueing customers ?

B_k : A_k was negative sometime in the past. A new customer arrives; is it k ?

Our approximation consists in the following two assumptions

- Conditional independance assumption : Given the present state of Z (i.e. the state of Z when the question A_k (resp. B_k) is asked), the answer to A_k (resp. B_k) is independant of the past of Z. We shall note $\alpha_k(n)$ (resp. $\beta_k(n)$) the conditional probability of a negative answer to A_k (resp. B_k) when this state is $Z = (0,n,0)$ (resp. $Z = (1,n,0)$)

- Stationarity assumption. The $\alpha_k(n)$ (resp. $\beta_k(n)$) do not depend on k.

Let us remark that these assumptions are the largest ones which allow a markovian stationary evolution of the M/G/1 reordering queue in its macro-state space. This approximation reduces the analysis of reordering queues with unknown disorder function, like those involved in the algorithm of section II.1.2, to a tractable queueing model (analyzed in section I.1 of part I), the parameters of which may be obtained by the easy measurements of α and β.

II.1.4. - Overhead due to Reordering in Distributed Control using Tickets

Clearly, the use of tickets for achieving the distributed control of a distributed data base determines 3 types of delays, the sum of which yields the system response time from the request point of view :

- the delay for getting the control token (i.e., its ticket)
- the transmission delay
- the response time of the end processor.

The overhead due to the last type of delay is now evaluated by means of the markovian approximation of reordering queues analyzed in section I.1. On the curves of fig. 4, we just apply Little's formula (which is valid for this type of queueing systems) to get the average response time from the average queue size at equilibrium. These curves are concerning the average response time of a M/M/1 reordering queue in a simplified DDSS model, the transmission medium of which is a Jackson Feedforward Network. Simulation results, given in appendix, are showing that in this case, the functions $\alpha(n)$ and $\beta(n)$ might be chosen as constant. The average response time of the markovian approximation of a M/M/1 reordering queue with $\alpha(n) = \alpha$, $\beta(n) = \beta^n$ is also given in fig. [5].

II.2. - CHECKPOINTING AND ROLLBACK RECOVERY IN CENTRALIZED DATA BASES

II.2.1. - Description of checkpointing and rollback recovery (CRR)

The aim of the CRR method is to increase reliability by means of software redundancy (BOU 79). Roughly speaking, it consists in making frequent copies of the whole data base on secondary devices (suppose to be unfailable) - this is the checkpointing procedure -. So when a failure occurs, one may recover by coming back to the copy of the most recent checkpoint and reprocessing all the transactions since this most recent checkpoint - this is the Rollback Recovery Procedure. Clearly too frequent checkpoints waste time making unnecessary copies, and too distant checkpoints waste time reprocessing a great number of transactions for each failure. CHA 75 defines the static optimization of CRR as the determination of the checkpointing frequency which minimizes the average response time of the system at steady state.

II.2.2. - Queueing Algorithm N° 2 as a refined model of CRR methods

In this section, we analyze the basic model proposed by Gelenbe - Derochette (GEL 78) when removing the exponential assumptions on request completion. In this model, the data base, when available, is considered as a queueing system processing requests on a FIFO basis (the system is said in state 0). Two types of breakdowns may occur corresponding to the situation when the system is unavailable for requests due to checkpointing (type 1 breakdown in our section I.2 model) and due to recovering (type 2 breakdown). Furthermore the system evolution in state space {0,1,2} is assumed to be markovian. Clearly, taking into account the real statistic properties of transaction completion demands further description of the types of interruptions : those service interruptions due to checkpointing decisions are to be considered as preemptive resume (because it is not necessary to reprocess all the requests of the interrupted transaction after the end of the checkpoint). On the contrary, those due to failures are modelled as preemptive repeat (this distinction collapses for exponential laws). The results of section I.2 are used to derive the checkpointing frequency which minimizes the average response time at steady state (fig. [6]) for Erlang distributed request processing laws.

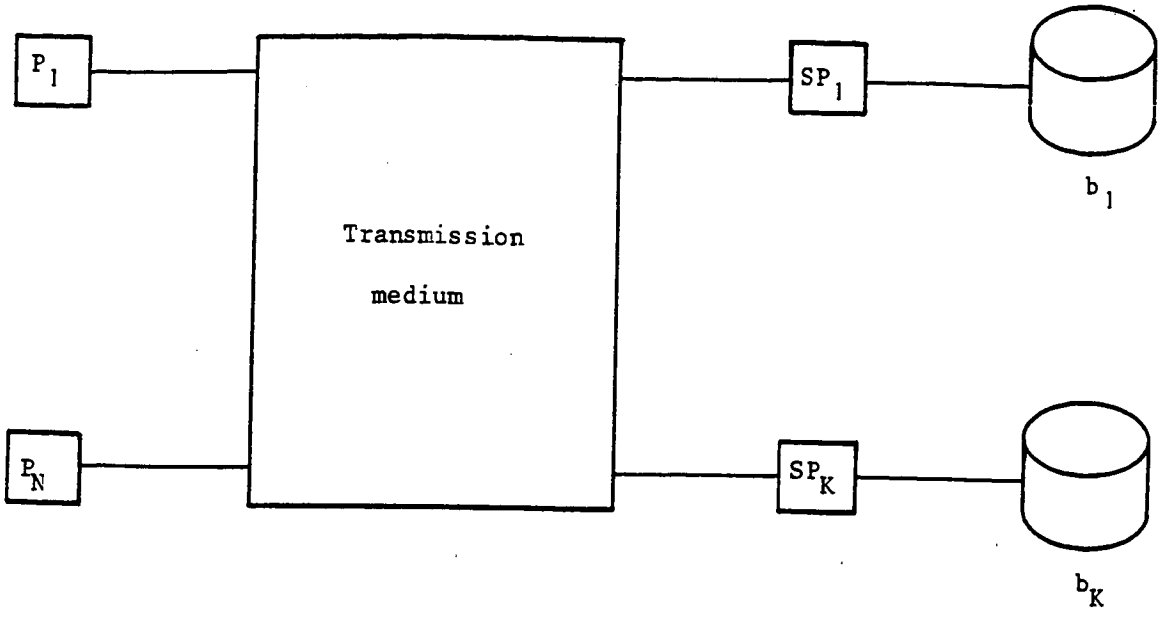

Figure 3

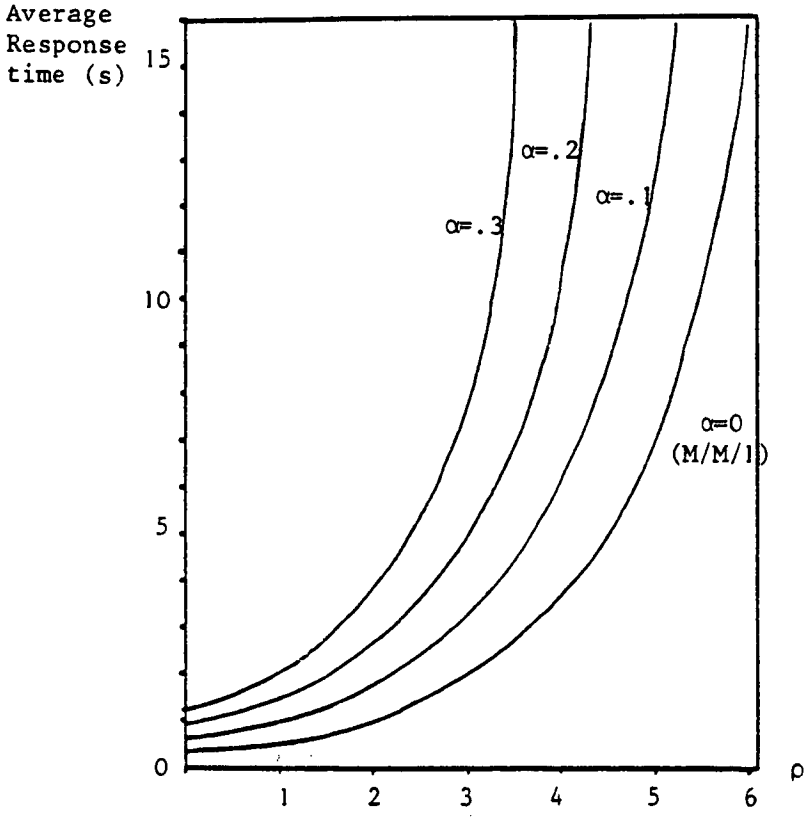

Figure 4 M/M/1 reordering queue $\begin{cases} \beta(n) = \beta \\ \alpha(n) = \alpha \end{cases}$ $n \geq 0$

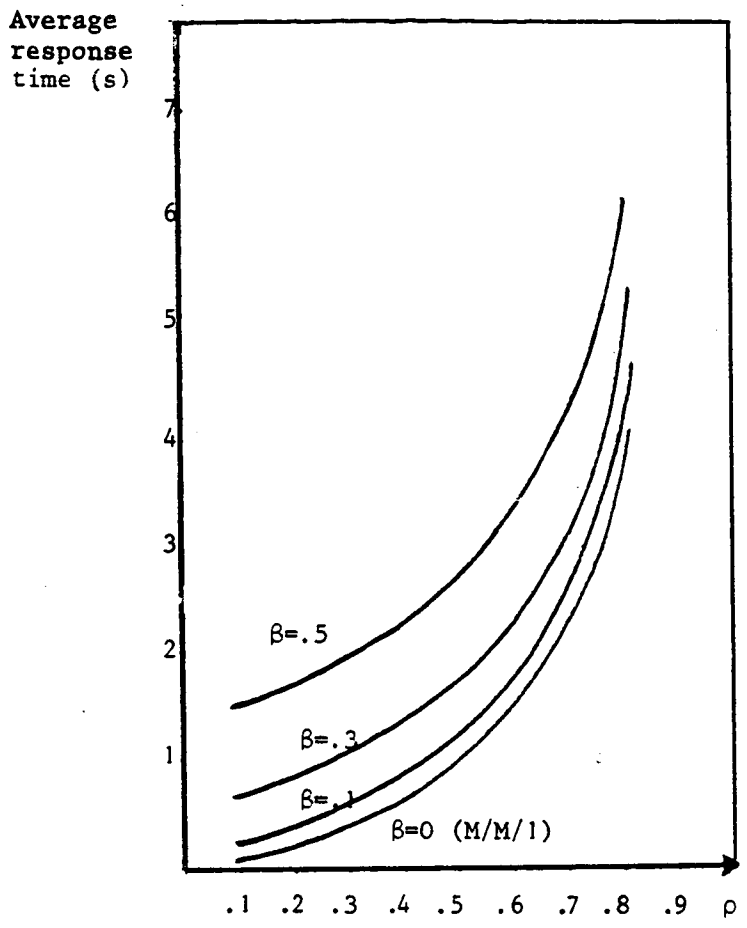

Figure 5 M/M/1 reordering queue $\begin{cases} \beta(n) = \beta \\ \alpha(n) = \beta^n \quad n \geq 0 \end{cases}$

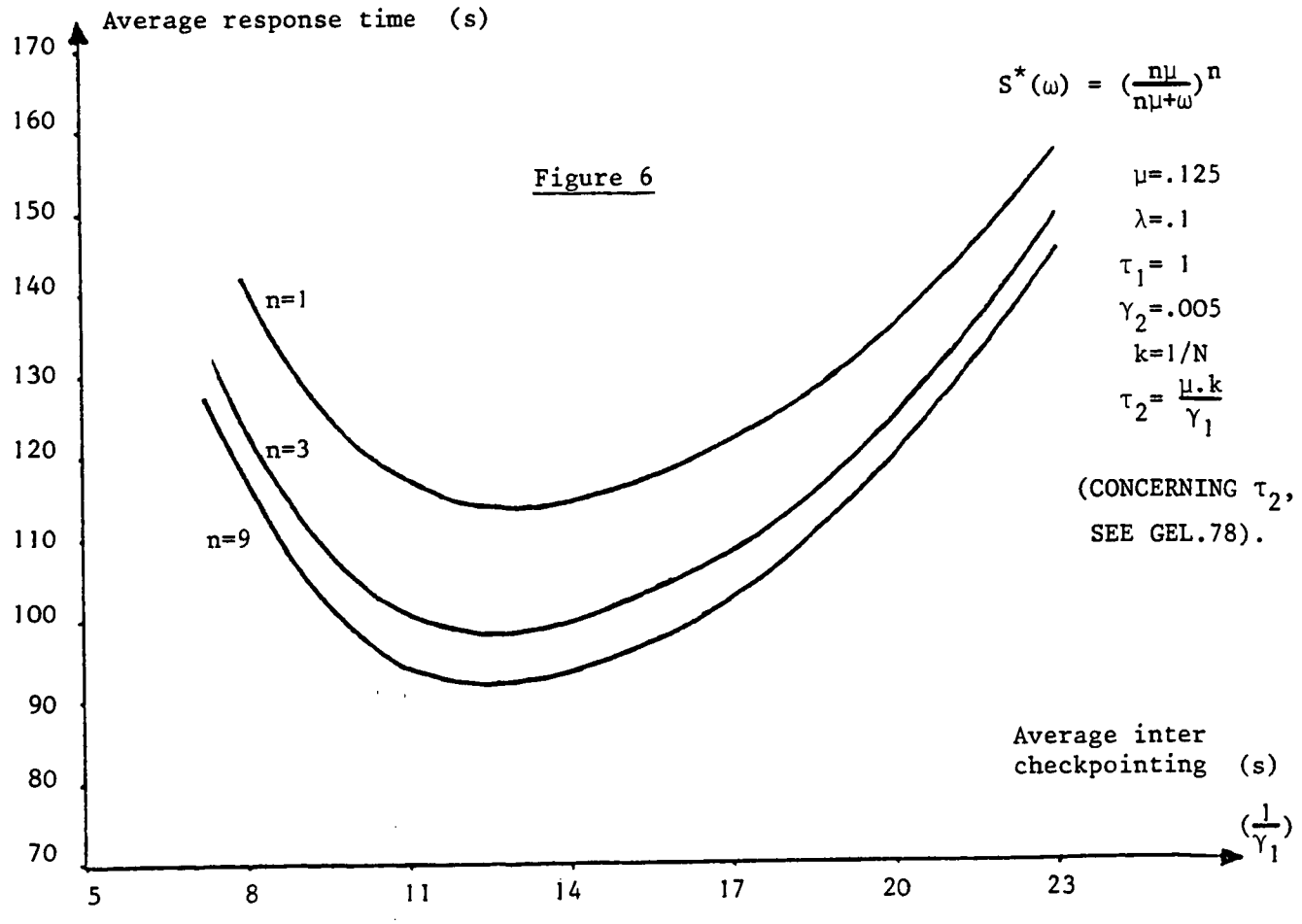

Figure 6

APPENDIX

A simulation program has been written in order to determine which assumptions are more consistant, concerning the functions $\alpha(n)$ and $\beta(n)$, in a feedforward Jackson network, and to evaluate the values of the involved parameters. The results are showing that constant functions yield a good approximation in that case : the following tables give, for example, a typical $\alpha(n)$ function (NB(n) is the number of breakdowns which occured in state n; N(n) is the number of visits in state N=n ; $\alpha(n) = \frac{NB(n)}{N(n)}$) :

$$\begin{bmatrix} \alpha(1) = .23 & NB(1) = 8956 \\ \alpha(2) = .31 & NB(2) = 2086 \\ \alpha(3) = .33 & NB(3) = 683 \\ \alpha(4) = .34 & NB(4) = 259 \\ \alpha(5) = .27 & NB(5) = 89 \\ \alpha(6) = .30 & NB(6) = 25 \end{bmatrix}$$

$$\beta \simeq .5$$

BIBLIOGRAPHY

AVI.63] AVIITZHAK and P. NAOR, "Some queueing problems with the service station subject to breakdown", Op. Res. 11, 1963.

BAC 80] BACCELLI F., "Analysis of a service facility with periodic checkpointing", to appear in ACTA INFORMATICA 1980.

BOU 79] BOUCHET P., "Procédures de reprise", Monographie d'informatique de l'AFCET, Ed. Hommes et Techniques, 1979.

CHA 75] CHANDY K.M., "A survey of analytic models of Rollback recovery Strategies", IEEE Computer 8, p. 40-47, 1975.

ELL 77] ELLIS C.A., "Consistency and correctness of duplicate database systems". Proceedings of the sixth ACM Symposium on Operating systems principles, Nov. 1977.

GAV 62] GAVER D.P., "A waiting Line with interrupted service", J. Roy. Stat. Soc. B, 24, 1962.

GEL 78] GELENBE E., DEROCHETTE, "Communications of the ACM, June 1978, Volume 21, Number 6 : "Performance of Rollback recovery systems under intermittent failures".

GEL 78] GELENBE E., SEVCIK K., "Analysis of update synchronisation for multiple copy data bases", Rapport de Recherche n° 322, INRIA, Septembre 1978.

HER 79] HERMAN D., VERJUS J.P., "An algorithm for maintaining the consistency of multiple copies", First international conference on distributed computing systems, Huntsville, Alabama, Oct. 1979.

KEI 62] KEILSON J., "Queues subject to service interruption", Ann. Math. Stat. 33, 1962.

LEL 78] LE LANN G., "Algorithms for distributed data sharing systems which uses Tickets", Proceedings of the third Berkeley Workshop on Distributed Data Management and Computer Networks, August 29-31, 1978, San Francisco.

LEM 77] LEMOINE A.J., "Networks of queues. A survey of equilibrium analysis", Management Science, Vol. 24, N° 4, December 77.

MIT 79] MITRANI I., "A critical note on a result by Lemoine", Management Science, Vol. 25, N° 10, Octobre 1979.

PAK 69] PAKES A.G., "Some conditions for ergodicity and recurrence of Markov chains", Op. Research 17 (1969), 1058-1061.

TAK 62] TAKACS L., "Theory of Queues", Oxford 1962.