HAL
open science

Medium term production planning model with production subsystems and part-families

Xiaolan Xie, Hervé Hillion, Jean-Marie Proth

To cite this version:

Xiaolan Xie, Hervé Hillion, Jean-Marie Proth. Medium term production planning model with production subsystems and part-families. [Research Report] RR-0736, INRIA. 1987. inria-00075816

HAL Id: inria-00075816

https://inria.hal.science/inria-00075816

Submitted on 24 May 2006

HAL is a multi-disciplinary open access archive for the deposit and dissemination of scientific research documents, whether they are published or not. The documents may come from teaching and research institutions in France or abroad, or from public or private research centers.

L'archive ouverte pluridisciplinaire **HAL**, est destinée au dépôt et à la diffusion de documents scientifiques de niveau recherche, publiés ou non, émanant des établissements d'enseignement et de recherche français ou étrangers, des laboratoires publics ou privés.

UNITÉ DE RECHERCHE
INRIA-LORRAINE

Institut National
de Recherche
en Informatique
et en Automatique

Domaine de Voluceau
Rocquencourt
B.P.105
78153 Le Chesnay Cedex
France

Tél.:(1) 39 63 55 11

Rapports de Recherche

N°736

MEDIUM TERM PRODUCTION PLANNING MODEL WITH PRODUCTION SUBSYSTEMS AND PART-FAMILIES

Xiao-Lan XIE
Hervé p. HILLION
Jean-Marie PROTH

OCTOBRE 1987

Medium Term Production Planning Model with Production Subsystems and Part-Families

Modèle de Planification de Production à Moyen terme avec des sous-systèmes de fabrication et des familles de produit

Xiao-lan XIE
Hervé p. HILLION
Jean-Marie PROTH

INRIA-LORRAINE
Château du Montet
Rue du Doyen Roubault
54500 Vadoeuvre-les Nancy
France
tel.:83 55 44 98

PAPIER RECUPERE ET RECYCLE

Abstract

Hierarchical production planning systems attract today much attention of both management scientists and practitioners.Hierarchical production planning systems are often decomposed into three decision-making levels, i.e. a medium term level, a short term level, and a very short term level.

This paper presents a medium term production planning model. At first , all machines which can perform the same operation are aggregated. Group technology is used to decompose the system into several subsystems, then specific attention is given on how to aggregate the subsystems. Similarly, parts are aggregated. We end up with an aggregate planning model involving production subsystems and part families.

Résumé

Les systèmes hiérarchiques de planification de production interessent de plus en plus les chercheurs de gestion de production et les praticiens. Les systèmes sont composés souvent de trois niveaux de prise de decisions, i.e. un niveau de moyen terme,un niveau de court terme, et un niveau de très court terme.

Cet article propose un modèle de planification de production à moyen terme. Au debut, toutes les machines qui sont capables de faire la même opération sont agrégées. La technologie de groupe est ensuite utilisée pour decomposer le système en plusieurs sous-systèmes. Similairement, les produits sont agrégés. A la fin, on obtient un modèle agrégé de planification composé de sous-systèmes de production et de familles de produit.

Key words: Hierachical production planning system, Production subsystems, Part-Families, Inventory control.

Mots Clés: Systèmes hiérarchiques de planification de production, Sous-systèmes de production, Familles de produit, Gestion de stock.

Medium Term Production Planning Model
with Production Subsystems and Part-Families

1. Introduction

In a production system, many decisions have to be made over time.For example, many decisions at a very detailed level, such as who will do a particular job and with what resources and when, must be made very frequently. On the other hand, some tactical decisions have to made, concerning production smoothing, coordination of different production groups, ordering of raw materials, etc. Much information for the first type of decision-making may be uncertain, for instance, machine breakdowns, raw material avaibility,etc. So a centralized controler or decision-maker will not be competent due both to the lack of adequate computing capability and to the uncertainty of the forecast information.

As opposed to centralized controlers, hierarchical controlers are well adapted to the control of complex systems. A hierarchical controler for a production system works in the following manner. Different types of decisions are made at different levels and over different time horizons. At a higher level, some tactical decisions are made without the detailed information. As a result, these decisions impose constraints on the lower level decision-making. While at a lower level, the level of details increases and the actions at this level provide a feedback to evaluate the higher level decisions.

To summarize, a hierarchical controler is well adapted to the production decision-making process. Furthermore, a hierarchical approach is a standard way to reduce the complexity of a problem.

There are several types of hierachical production planning systems. Hierachical MRP system can be found in Axsäter[1], where the product structures and capacity requirements have been expressed in terms of product groups and machine groups and the consistency of aggregation has been discussed.

Hierarchical flexible manufacturing systems control has been studied by Hildebrant[9] and Kimemia[10], where hierarchical controlers have been devised in order to keep up with the demand flow by adjusting the production rate .

In this paper, we are interested in hierarchical production planning systems. This subject has been previously adressed by Bitran,Haas and Hax[4], Hax and Meal[8] and Graves[7].Their approach was limited to the case of batch production. This is less successful in a more general case. Very recently, Proth,Hillion and Meier[12] have proposed a top level model for the general case. But it is just a work in its first phase, many problems still remain open. Our work is based on system decomposition and part aggregation and a medium term planning model will be proposed.

2. System Description

We shall establish in the following a medium term production planing model. It is generally true that the time a part spends in the in-process inventories of the system is much less than the time where a finished product stays in the inventory for the delivery. So it seems to be meaningless to consider the in-process inventories when we establish a medium term production planning model. For this reason, we shall neglect in the following the in-process inventories and only the inventories for the finished products will be considered. Consequently, the sytem to be considered is composed of a set of machines, inventories for finished products and the known demand.

We suppose that each machine in the system can perform only one operation and the production process of any product is defined by a sequence of operations. The system is typically a job-shop.It will be called in the following the zero level model.

Example:

Figure 1 shows a production system with 11 machines, on which 6 operations can be carried out ,and 6 products can be manufactured. All the machines of the set opi can carry out the operation i. The production process of the six products are shown in the following sequences :

product p1: op1, op2 ,op3;
product p2: op1 , op2;
product p3: op1 , op5 , op3;
product p4: op4 , op2 , op6;
product p5: op4 , op5 , op6;
product p6: op4 , op6.

In order to simplify the next developments, we assume that the processing time of any operation is independent of the product and the machine on which the operation is performed.These processing times are shown in the following,

op1: 2 min /part ,	op2: 0.1 min /part,
op3: 3 min /part ,	op4: 2 min /part,
op5: 0.2 min /part,	op6: 1 min /part.

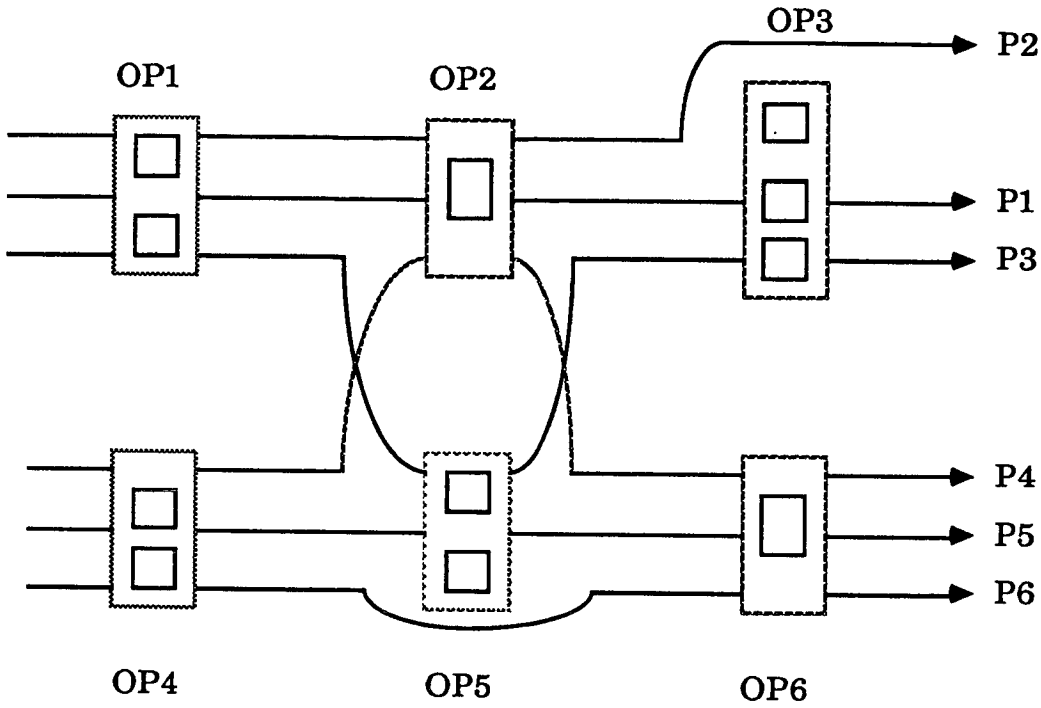

Figure 1, Model of level 0

3. System Aggregation

Often, one can simplify a complex problem by decomposing it into several subproblems and the solution of the overall problem can be computed from the subproblem solutions.For some production systems, we can decompose them into several processing subsystems.As shown in Dridi,Portmann and Proth[5], we can decompose a manufacturing system into several processing subsystems using group technology, given the assumption that the production process of any product is defined by a unique machine sequence.

We shall study how to make use of the decomposition for simplifying a production system in the medium term production planning. Here, because of parallel machines, the system will be simplified in two steps. At the first step, the parallel machines are changed by the equivalent ones as shown in Meier and Proth[11]. Then at the second step, the system will be decomposed into several subsystems which are as independent as possible one to the others, using group technology.

3.1 Aggregation of parallel machines

Let { $M_{o1}, M_{o2}, \ldots, M_{on}$} denote the set of parallel machines which can perform operation **O**. Let $\mathbf{P}_m$ denote a product which requires operation **O** , and ρ_m its production ratio. Let α_{oim} denote the proportion of product $\mathbf{P}_m$ to be produced on machine M_{oi} and let τ_{oim} be the processing time.Then a production plan of productivity X and production ratio $(\rho_1,\ldots,\rho_M)$, where M denotes the number of products, is feasible if there exists an allocation (α_{oim}) such that the following set of constraints are satisfied.

$$\sum_{m=1,\ldots,M} \tau_{oim} * \rho_m * \alpha_{oim} * X \leq 1 \qquad \text{for all machines; } i=1,\ldots,n;$$

$$\sum_{i=1,\ldots,n} \alpha_{oim} = 1 \qquad \text{for all the products; } m=1,\ldots M.$$

It may be very complicated to determine the set of feasible solutions. But we can represent the set of parallel machines by a equivalent one M_o, on which the processing time of the product $\mathbf{P_m}$ will be computed as follows,

$$\left(\sum_{i=1,\ldots,n} (\tau_{oim})^{-1} \right)^{-1} .$$

It will be shown in Appendix 1 that all feasible production plans for the resulting system remain feasible in the original system. In the following, it will be referred to as the model of level 1.

Example::

In the system shown in the Figure 1, the machines which can perform the same operation will be represented by an equivalent machine. The processing time on the equivalent machine M_3 for any product which requires operation op3 becomes,

$$(1/3 + 1/3 + 1/3)^{-1} = 1$$

The same computation can be carried out for other machines and the results are shown in Figure 2.

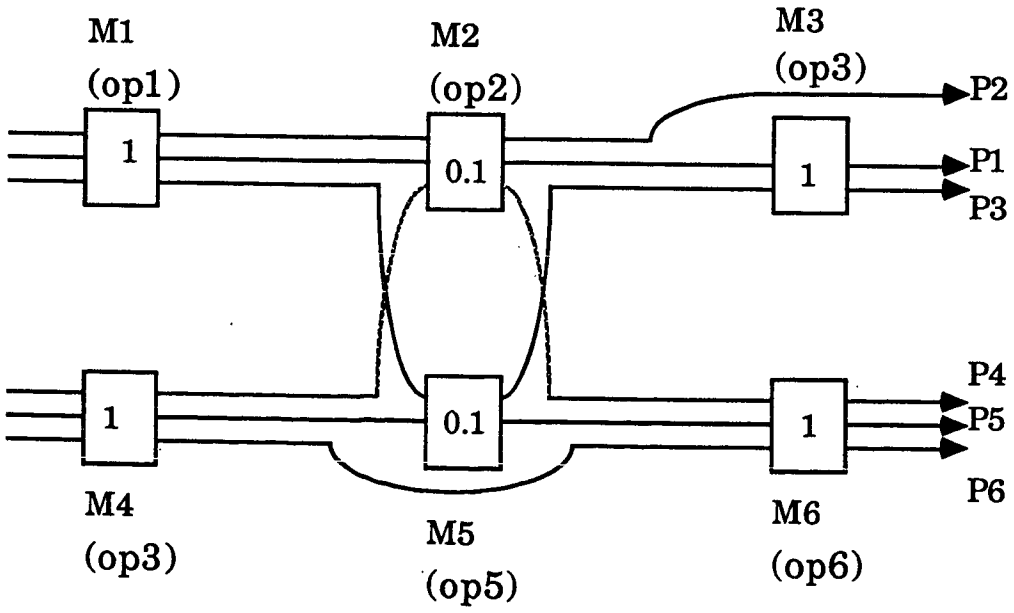

Figure 2, Model of level 1 : operations+products

(processing time unit is min/part)

3.2 Decomposition of the system

At the second step of the aggregation scheme, we have initially in the system a set of machines. Each of them corresponds to one different operation. We have defined the production process of a product by a sequence of operations, it is then equivalent to define it by a sequence of machines for a model of level 1.

Following the work of Dridi,Portmann and Proth[5], we shall decompose the system into several subsystems so that most of the operations of any product are carried out in only one subsystem. In the perfect decomposition case, all the operations of any product are carried out in only one subsystem and the subsystems are totally independent.

The processing times of the products on the machines will be used to decompose the system. The are represented by a matrix described in following,

$$[\tau_{ij}]$$

where i denote the products and j the equivalent machine (or operation). Each product will be weighted by its production ratio over the planning horizon. We can then decompose the system into **q** subsystems in the same way as described in Dridi, Portmann and Proth[5]. We will not detail the method here.

Example :

Next to the parallel machine aggregation shown in the Figure 2, we now decompose the system into several subsystems. The processing time matrix is shown on Table 1 where it is assumed that all production ratios are equal.

	M1	M2	M3	M4	M5	M6	ratio
P1	1	0.1	1	0	0	0	1/6
P2	1	0.1	0	0	0	0	1/6
P3	1	0	1	0	0.1	0	1/6
P4	0	0.1	0	1	0	1	1/6
P5	0	0	0	1	0.1	1	1/6
P6	0	0	0	1	0	1	1/6

Table 1: Processing time matrix

As it can be noticed, a rather obvious decomposition is the following one: (p1,p2,p3,M1,M2,M3) and (p4,p5,p6,M4,M5,M6). Let us now turn to the medium term planning model.

4. Operation Rules

In this section, we are going to study how to make the system management easier by applying some reasonnable operation rules.

Considering the decomposition obtained, we suppose that the batch production is used to organize the production of each subsystem. It means that all the operations to be perform on a subsystem will be carried out by lots. And at the top level of the production planning system, we can consider the subsystems as elementary components.

With the previous assumptions, each subsystem is now a ressource which is shared only among the corresponding products and which can not be used by two part-types simultaneously. Then a subsystem can be considered as a machine at a higher level. The processing time of a product on the equivalent machine can be computed by the inverse of the maximal production rate when only the product is processed and only the operations in the subsystem are taken into account.

Example :

Following the decomposition made in the previous section for our example, we apply now the batch production rule to each subsystem.Replacing each subsystem by a equivalent machine as described above, the system is aggregated as a two machines-system. For instance, the processing time of the product **p1** on the equivalent machine of the subsystem **S1** is computed this way:

$$(\min(1/1\ ,1/0.1\ ,1/1\ ))^{-1} = 1$$

The same computations can be carried out for the others, and the results are shown in Figure 3.

The resulting model will now be called model of level 2.

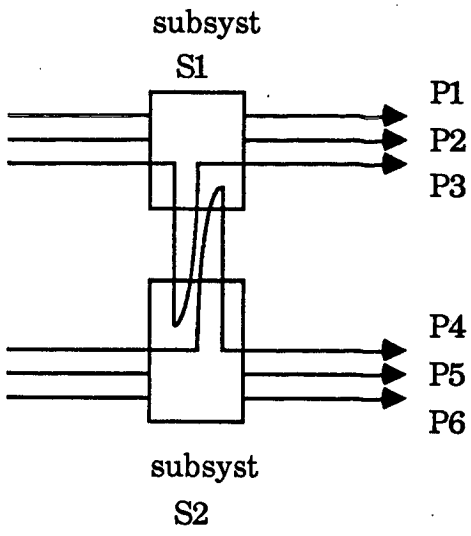

processing time(min/part)

S1	S2	
1	0	p1
1	0	p2
1	1/30	p3
1/30	1	p4
0	1	p5
0	1	p6

Figure 3, Model of level 2 : subsystems + products

At level 2, we finally end up with a smaller set of machines, corresponding to the set of subsystems. The interesting points of this model can be shown by the two following properties.

Property 1: Any feasible plan in the model of level 2 is feasible in the model of level 1 and consequently the model of level 0.

Property 2: Any feasible plan obtained by applying the batch production to the overall system in a model of level 0 is also feasible for the model of level 2.

The two properties will be shown in Appendix 2 and 3.

The system is now well designed to the medium term production planning. But the number of products still remains too large. So we will aggregate in the next section the products which have similar characteristics in part families in order to obtain a model composed of subsystems and part families. It is the top level model that we seek to obtain .

5. Part Aggregation

In order to simplify the medium term production planning, we have to aggregate the parts which have similar features. In the following we will study at first several characteristics. Then with the characteristics chosen, part aggregation will be studied.

From a production planning point of view, some characteristics are often taken into account in part aggregation, for example, the processing times, the resources used, the inventory holding costs, the production costs and the demands. In our model of decomposition, it is obvious to take into account the processing times and the subsystems used by a part. The other characteristics will be chosen according to the criteria used in the medium term production planning which may be of different kinds.

Once the characteristics are chosen,a measure which takes into account all the characteristics chosen will be proposed for computing the degree of similarity of two parts.Many works have been devoted to the study of appropriate measurement of similarity.Subsequently, many techniques of classification can be used to aggregate similar parts into families.We shall not discuss the problem here.

Example:

Following the model of level 2 shown in the Figure 3, we now want to aggregate the different products. In this example, our aim is to minimize the inventory cost and we suppose that the inventory holding cost is the same for all the six products in order to simplify the computation. Then it is obvious that the parts which have a similar processing time on all the machines (or subsystems) will be aggregated into one part family. If we represent a product by a point in the euclidean space defined by the processing time on each subsystem, the points which are close one to the others represent a part-family.

Figure 4 shows the distribution of parts in the plan defined by the processing time on the two subsystems **S1** and **S2**. It is obvious that the parts **p1**,**p2**,**p3** will be aggregated in one part family, denoted by **f1** and the other ones in another family, denoted by **f2**. The processing time of f1 on the subsystems can be computed as follows:

on subsystem S1: (1*1/6+1*1/6+1*1/6)/(1/6+1/6+1/6) = 1,

on subsystem S2: (0*1/6+0*1/6+0.1*1/6)/(1/6+1/6+1/6) = 1/30.

The computation for f2 is the same and the results are shown in the Figure 5.At this point we shall call the resulting system as the model of level 3 or the master production planning model.

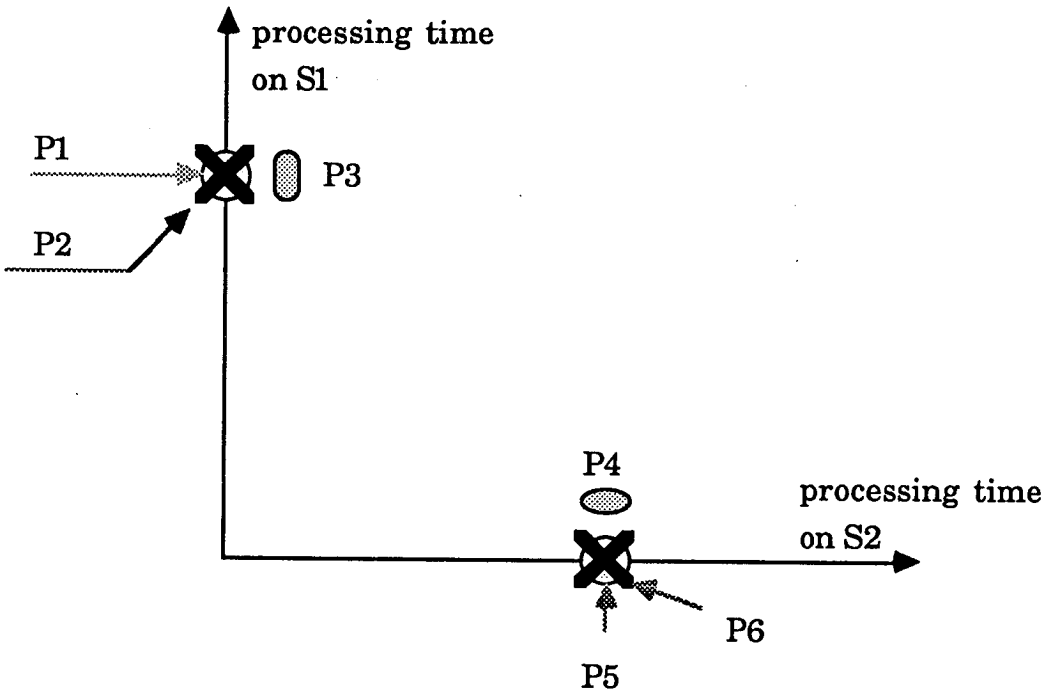

FIgure 4, plan of processing time

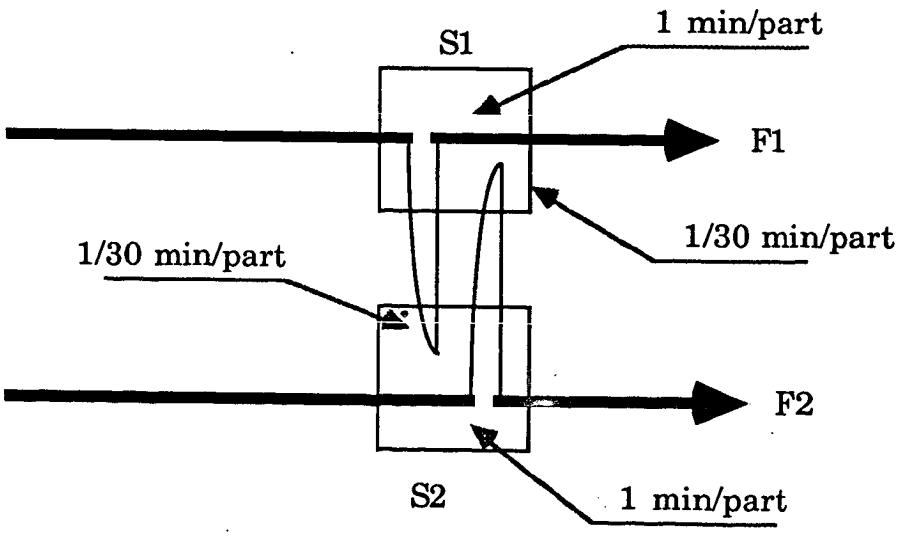

Figure 5, model of level 3: subsystems+part familes

6. Medium Term Production Planning

The medium term production planning is now much simpler with the system resulting from the system decomposition and the part aggregation. The resulting system is composed of a set of machines and a set of part families, the production process of each part family is defined by a set of machines. Then the production planning may be formulated in the following way,

$$\sum_{t=1}^{T} \sum_{f=1}^{F} g_{ft}(X_{ft}, I_{ft}) \longrightarrow \min$$

$$I_{ft} = I_{ft-1} + X_{ft} - d_{ft}$$

$$I_{ft} \geq 0$$

$$X_{ft} \geq 0$$

$$\sum_{f \in S_i} \tau_{fi} . X_{ft} \leq \Delta_{it}$$

where $\mathbf{I_{ft}}$, $\mathbf{X_{ft}}$, $\mathbf{d_{ft}}$ denote the inventory level at the end of period t, the production and the demand of the part famile f. $\mathbf{S_i}$ denotes the subsystem i and Δ_{it} the total available time of the subsystem $\mathbf{S_i}$ in period t. Δ_{it} may be different depending on the length of each period and denotes the maximum running time.

The problem which is called in the litterature inventory control problem has been adressed by many authers,for example Bensoussan, Crouhy and Proth[2] and Bensoussan and Proth[3]. We shall not study it farther.

7. Example

For the model of level 3 shown in the Figure 5, suppose that we have to plan production over one year period. The demand and the total available time in each period are shown in Table 2.

month	demands (1000 parts)		subsystem avaibility (hours) $\Delta 1t = \Delta 2t$
	family 1	family 2	
1	5.4	5.4	110
2	4.2	5.4	80
3	4.8	5.4	120
4	6.0	5.4	160
5	7.2	5.4	160
6	9.6	5.4	160
7	8.4	6.0	70
8	7.2	6.0	70
9	5.4	7.2	120
10	5.4	9.6	160
11	7.2	9.6	160
12	10.8	10.8	100

Table 2. Demand and System avaibility

Because the inventory holding cost is assumed to be the same for all the products, then the inventory cost in each period can be computed by the number of parts in the inventory, i.e.,

$$g_{ft}(X_{ft}, I_{ft}) = I_{ft}.$$

The system capacity constraints can be written as follows,

$$X_{1t} + 1/30 * X_{2t} \leq \Delta_{1t}$$

$$1/30 * X_{1t} + X_{2t} \leq \Delta_{2t}.$$

And the inventories are assumed to be initially empty, i.e.,

$$I_{10} = I_{20} = 0.$$

We can then solve the problem using linear programing technics . The results are shown in Table 3.

month	family 1 (1000 parts)		family 2 (1000 parts)		time used (hours)	
	production	inventory	production	inventory	S1	S2
1	5.400	0.	6.143	0.743	93.4	105.4
2	4.310	0.110	4.656	0.	74.4	80.
3	7.020	2.330	5.400	0.	120.	93.9
4	9.358	5.689	7.248	1.848	160.	126.
5	9.290	7.780	9.290	5.739	160.	160.
6	9.290	7.470	9.290	9.629	160.	160.
7	4.064	3.135	4.064	7.694	70.	70.
8	4.064	0.	4.064	5.759	70.	70.
9	5.400	0.	7.020	5.579	93.9	120.
10	8.302	2.902	9.323	5.302	143.5	160.
11	9.290	4.993	9.290	4.993	160.	160.
12	5.806	0.	5.806	0.	100.	100.

Table 3. Production Plan

Conclusion

We have proposed a medium term production planning model. The main interest of this model lies in that all feasible plan for a model without the part aggregation remains feasible for the original model. Another point deserves attention as well. Recall that we have supposed that the batch production rule are used to organize the production of each subsystem. It is then possible to introduce set-up costs in a way similar to the one described by Bitran, Haas and Hax[4] but in a more general case.

REFERENCES

[1] AXSÄTER,S. (1981)
"Aggregation of Product Data for Hierarchical Production Planning", Operations Res.,vol.29, n° 4, 1981

[3]BENSOUSSAN,A., M.CROUHY and J.M.PROTH(1983)
"Marhematical Theory for Production Planning", Adanced Series in Management, North Holland Publishing, 1983

[3]BENSOUSSAN,A. and J.M.PROTH(1984)
"Inventory Planning in a deterministic environment: Concave cost set-up", Large Scale System,6,1984

[4] BITRAN,G.R.,E.A. HAAS and A.C. HAX (1981)
"Hierarchical Production Planning: A Single Stage System", Operation Res., vol. 29, n°.4, July-August 1981.

[5]DRIDI,N.,M.C.PROTMANN and J.M. PROTH (1986)
"Une Méthode de décomposition pour les Problèmes d'Ordonnancement en Production", Proceeding of the Seventh International Conference on Analysis and Optimization of System,INRIA,Antibles ,France,June 25-27,1986

[6]GERSHWIN,S.B.,R.R.HILDEBRANT,R.SURI,and S.K. MITTER (1984)
"A Control Theorist's Perspective on Recent Trends in Manufacturing Systems", Proceeding of 23rd Conference on Decision and Control, Las Vegas, December 1984.

[7] GRAVES,S.C.(1982)
"Using Langrangean Techniques to Solve Hierarchical Production Planning System", Management Science, vol.28, n°3,March 1982

[8]HAX,A.C. and H.C. MEAL (1975)
"Hierarchical Integration of Production Planning and Scheduling", in North Holland/TIMS, Studies in Management Sciences, vol.1, Logistics, North Holland Amsterdam and American Elsevier, New-York

[9] HILDEBRANT,R.(1980)
"Scheduling Flexible Machining Systems when Machines are prone to failures", Ph.D Thesis, MIT, Dept of Aeronautics and Astronautics.

[10] KIMEMIA,J.G. (1982)
"Hierarchical Control of Production in Flexible Manufacturing Systems", PhD Thesis,M.I.T Dept. of Electrical Engineering and Computer Science, 1982

[11] MEIER,K. and J.M. PROTH (1987)
"Scheduling in large scale production systems: a medium term production management model", Proceeding of 2nd International Conference on Production Systems,INRIA, Paris ,France, Avril,1987

[12] PROTH,J.M.,H.HILLION and K.MEIER (1987)
"Production Subsystems and Part-Familes: The Top Level Model in Hierarchical Production Planning System"

Appendix 1: Proof of the Property of the model of level 1

Property: All feasible production plan in the model of level 1 remains feasible in the original model.

Proof. We use the same notations as in the section 3.Let { $x_1,\ldots,x_M$} be a production plan, where M is the number of products.

It is said to be feasible for an operation **O** in the model of level 0, if there exists an allocation (α_{oim}) for the set of parallel machines { $M_{o1},M_{o2},\ldots,M_{on}$} such that

$$\sum_{m=1,\ldots,M} \tau_{oim} * \alpha_{oim} * x_m \leq 1 \qquad \text{for all the machines;} \quad i=1,\ldots,n$$

$$\sum_{i=1,\ldots,n} \alpha_{oim} = 1 \qquad \text{for all the products.} \quad m=1,\ldots,M$$

It is said to be feasible for the equivalent machine Mo in the model of level 1, if it satisfies the following constraint,

$$\sum_{m=1,\ldots,M} \tau_{om} * x_m \leq 1$$

$$\text{where } \tau_{om} = \left(\sum_{i=1,\ldots,n} (\tau_{oim})^{-1} \right)^{-1} .$$

Obiously, the two admissible regions are both convex. And all the vertices of the second region are also the vertices of the first region. So, the first region is a subset of the second one. And it is true for all the operations, then the property is shown.

Appendix 2: Proof of Property 1

Property 1: All feasible plan in the model of level 2 is feasible in the model of level 1 defined by operations, consequently it is feasible in the original model, i.e. the model of level 0.

Proof. Let { S_1,.., S_{ns}} denote the set of subsystems ,and let {P_1,...,P_M} be the set of products and let t_{ij} be the processing time of the product Pi on the subsystem Sj in the model of level 2.Assume that a production plan {x_1,...,x_M} is feasible in the model of level 2. Then for all subsystems Sj,

$$\sum_{i=1,\ldots,M} t_{ij} * x_i \leq 1 \qquad (1).$$

We have defined t_{ij} by the inverse of the maximal production rate when only the product Pi is processed and only the operations in subsystem Sj are considered. Since we assume that the production process of a product is defined by a sequence of operations, then the quantity $t_{ij}*x_i$ is equal to the maximal utilization ratio of the equivalent machines of the subsystem Sj by the product Pi.

From equation (1), the total utilization ratio of any equivalent machine of the subsystem S_i by the set of products { P_1,...,P_M} is always less than one.And it is true for all the subsystems. So the production plan is feasible in the model of level 1.

Since all production plan feasible in the model of level 1 remains feasible in the original model, the property is then shown.

Appendix 3: Proof of Property 2

Property 2: All feasible plan obtained by applying the batch production to the overall system in a model of level 0 is also feasible for the model of level 2.

Proof. Let S_j, t_{ij} and P_i be the same notations as these in the Appendix 2.

We recall that the processing time of a product on an equivalent machine in the model of level 1 is the inverse of the maximal production rate when only the product is processed by the set of machines. It means that applying the batch production rule to the overall system in the model of level 0 is equivalent to apply the batch production rule to the model of level 1.

Let r_i denote the inverse of the production rate when only the product Pi is processed in the model of level 1.Assume that a plan $\{ x_1,\ldots,x_M\}$ is feasible obtained by applying the batch production rule to the overall system in the model of level 1, then

$$\sum_{i=1,\ldots,M} r_i * x_i \leq 1 \qquad (2)$$

By the definition of t_{ij}, it is obvious that t_{ij} is not bigger than r_i,i.e.,

$$t_{ij} \leq r_i \qquad (3)$$

Combining relation (2) and (3), it comes:

$$\sum_{i=1,\ldots,M} t_{ij} * x_i \leq 1 \qquad (4)$$

Relation (4) shows that the plan is feasible in the model of level 2. The property 2 is then shown.

Imprimé en France
par
l'Institut National de Recherche en Informatique et en Automatique