HAL
open science

Mobile robot control. Part 1 : Feedback control of nonholonomic wheeled cart in cartesian space

Claude Samson, Karim Ait-Abderrahim

To cite this version:

Claude Samson, Karim Ait-Abderrahim. Mobile robot control. Part 1 : Feedback control of nonholonomic wheeled cart in cartesian space. [Research Report] RR-1288, INRIA. 1990. inria-00075271

HAL Id: inria-00075271

https://inria.hal.science/inria-00075271v1

Submitted on 24 May 2006

HAL is a multi-disciplinary open access archive for the deposit and dissemination of scientific research documents, whether they are published or not. The documents may come from teaching and research institutions in France or abroad, or from public or private research centers.

L'archive ouverte pluridisciplinaire **HAL**, est destinée au dépôt et à la diffusion de documents scientifiques de niveau recherche, publiés ou non, émanant des établissements d'enseignement et de recherche français ou étrangers, des laboratoires publics ou privés.

UNITÉ DE RECHERCHE
INRIA-SOPHIA ANTIPOLIS

Institut National
de Recherche
en Informatique
et en Automatique

Domaine de Voluceau
Rocquencourt
B.P. 105
78153 Le Chesnay Cedex
France
Tél.:(1) 39 63 55 11

Rapports de Recherche

N° 1288

Programme 6
Robotique, Image et Vision

MOBILE ROBOT CONTROL PART 1 : FEEDBACK CONTROL OF A NONHOLONOMIC WHEELED CART IN CARTESIAN SPACE

Claude SAMSON
Karim AIT-ABDERRAHIM

Octobre 1990

RR_1288

MOBILE ROBOT CONTROL
PART 1: FEEDBACK CONTROL OF A NONHOLONOMIC WHEELED CART IN CARTESIAN SPACE

COMMANDE DE ROBOTS MOBILES
PREMIERE PARTIE: COMMANDE PAR RETOUR D'ETAT D'UN CHARIOT NON-HOLONOME DANS L'ESPACE CARTESIEN

Claude SAMSON
INRIA, Centre de Sophia-Antipolis
Route des Lucioles, 06565 VALBONNE, FRANCE.

Karim AIT-ABDERRAHIM
INRIA, Centre de Sophia-Antipolis
Route des Lucioles, 06565 VALBONNE, FRANCE.

June 8, 1990

Abstract

This report contains a preliminary study of the problem, thus far little treated in existing Robotics literature, of mobile robots' feedback control. The robot considered here is a two-wheel driven nonholonomic cart. We show that, despite the (weak) controllability of the system, pure state feedback stabilization of the cart's configuration around a given terminal configuration is not possible. However, feedback stabilization of the position of any cart's point remains possible. The choice of a point away from the wheels' axis is nevertheless preferable in this case in order to ensure good convergence properties. Extension to the problem of trajectory tracking in Cartesian space is then considered, and we show that stabilization of the cart's configuration around the configuration of a virtual reference cart becomes possible as long as the reference cart keeps moving. Several simple control laws are proposed and illustrating simulation results are given. Connections with the path planning problem are pointed out.

Key words: mobile robots, nonholonomy, nonlinear systems, controllability, feedback stabilization.

Résumé

Ce rapport contient une étude préliminaire du problème, encore peu traité dans la litérature Robotique, de la commande par retour d'état des robots mobiles. Le robot ici considéré est un chariot équipé de deux roues motrices sur un même axe. C'est un exemple simple de système non-holonome. On montre que, bien que le système soit (faiblement) commandable au sens de l'accessibilité des systèmes non-linéaires, il n'existe pas de commande par retour d'état pur capable d'amener le chariot à une configuration terminale désirée quelque soit sa configuration initiale. Cependant, il demeure possible de stabiliser par retour d'état la position d'un point quelconque du chariot. Dans ce cas, il est préférable de choisir un point non situé sur l'axe des roues afin d'obtenir une convergence satisfaisante. L'extension au cas de la poursuite dans l'espace cartésien est ensuite considérée et on montre qu'il devient alors possible d'asservir le chariot à un chariot de référence virtuel, à condition que ce chariot reste en mouvement. Plusieurs lois de commande simples sont proposées et l'étude est illustrée par des résultats de simulation. Les liens avec le problème de planification de trajectoires sont mis en évidence.

Mots clés: robots mobiles, non-holonomie, systèmes non-linéaires, contrôlabilité, commande par retour d'état.

Contents

1 Introduction **4**

2 Kinematic equations of a two-wheel driven robot cart **5**
- 2.1 Equations in a fixed Cartesian frame 5
- 2.2 Equations in a mobile frame 7

3 Weak controllability and state-feedback stabilization **9**
- 3.1 The systems under consideration 9
- 3.2 The associated Control Lie Algebra 9
- 3.3 Frobenius Theorem and nonholonomy 10
- 3.4 Weak controllability (or accessibility) 10
- 3.5 Feedback stabilization 13

4 Feedback stabilization of the cart around a terminal configuration **14**
- 4.1 Existence of a position/orientation stabilizing feedback 14
- 4.2 Feedback stabilization of the position of a cart's point 16
- 4.3 Feedback stabilization of another pair of state variables 21

5 Tracking in Cartesian space **22**
- 5.1 Position servoing of a point of the two-wheel driven cart 22
- 5.2 Control in position and orientation 26
  - 5.2.1 Equations of the system 26
  - 5.2.2 Control 28

6 Summary and conclusions **34**

A Cart's equations **36**

B Calculation of the optimal control associated with the p.l. system **37**

C Proof of the Proposition **38**

D Stability of the p.l. system **40**

1 Introduction

In the last years the interest of the Robotics community for the mobile robots' path planning problem has grown rapidly in relation to the development of artificial intelligence and computational geometry. Let us cite [1]-[6] among many other contributions. Path planning is understandably of particular relevance in the case of mobile robots destined to move in complex, clustured and often partially unknown environments. Moreover, the fact that the motion of mobile robots is often governed by nonholonomic equations makes the designing of collision-free and realizable trajectories somewhat more difficult than in the case of robot manipulators. It is thus clear that this subject will continue to be thoroughly studied, all the more because much remains to be done to improve and generalize the techniques that have been proposed so far, in relation also to sensory fusion aspects when the information about the robot's environment on which path planning relies has to be processed from various sensors' outputs.

The connections of path planning with control theory, and more precisely with open-loop control aspects, have been pointed out in several studies [4]-[6]. On the other hand, and unlike what can be observed from the literature on robot manipulators, feedback control issues seem to have motivated very few studies, and conference communications like [7] and [8] appear to be exceptions which confirm the rule. Although we are well aware that the control requirements for mobile robots and robot manipulators are usually not of the same nature, we feel that more attention could be paid to the feedback control aspects, considering their importance in practice. For instance, the planning of trajectories is only of use when low level control loops are present to ensure good tracking and local recovery from deviations provoked by unmodeled perturbations. This automatic recovery feature is essential to avoid having to reconsider the control objectives permanently, which may not be very effective, and to lighten the task of higher planning levels. It is thus important to have a clear idea of the possibilities offered by simple feedback loops so as to be able to fully exploit them.

This report may be viewed as a preleminary study where these issues are formulated and treated with the automatic control point of view. More specifically, control in Cartesian space of a two-wheel driven cart is considered. In **section 2**, we express the cart's kinematic equations, at first in a fixed Cartesian frame, as it is usually done, and then in a frame tied to the cart, as it will prove to be more convenient for control purposes. This step provides us with models on which control design and analysis will be based. In **section 3**, some basic notions about controllability and feedback stabilization are recalled and some emphasis is put on showing that these two concepts do not have to coincide when nonholonomic constraints are involved. In **section 4**, feedback stabilization of the cart around a terminal configuration is considered. We first show that, despite the controllability of the cart, there is no C^1 state-feedback control able to stabilize both the cart's position

and orientation. However, feedback stabilization of the position of any cart's point is possible. Examples of control laws obtained by applying several techniques are discussed and illustrated by simulation results. The choice of a point not located on the wheels' axis is preferable in order to ensure good convergence properties. Stabilization of another pair of state variables concludes this section. In **section 5**, the static regulation problem treated previously is extended to problem of trajectory tracking in Cartesian space. Regulation of the position of a cart's point around the position of a moving reference point is first considered. In this case, the calculation of the desired reference trajectory (i.e. the trajectory followed by the reference point) is made easier by the fact that the motion of any cart's point not located on the wheels' axis is not restricted by the cart's nonholonomic constraints. Moreover, stabilization of the position error is unconditional. Then, control in both position and orientation is reconsidered via the introduction of a virtual reference cart to be tracked. We show that feedback stabilization of the cart's configuration around the reference cart's configuration is now possible and that convergence is ensured as long as the reference cart keeps moving. Control design based on the linearized system's equations is first considered, and then a set of globally stabilizing nonlinear controls is proposed. The condition of having the reference cart keep moving has implications on the choice of the reference cart's trajectory. Path planning and feedback stabilization thus cannot be considered independently. This section is illustrated by other simulation results. Finally, a short discussion of the results that have been obtained and future directions of our work are summarized in the concluding **section 6**.

2 Kinematic equations of a two-wheel driven robot cart

2.1 Equations in a fixed Cartesian frame

Through out this report, we will refer to the example of a two-wheel driven cart (of which a view from above is schematized **Fig. 1**). At first, this example will serve to illustrate a few general and classical concepts of control theory. Then, control laws will be specifically developed for this example.

To simplify, we consider that the cart of **Fig.1** is made of three rigid bodies (the cart's platform and the two driving wheels) and that it moves on a horizontal ground. Then, a possible parametrization of the cart's configuration space is (see **Fig.2**):

$$X = \begin{bmatrix} q_1 \\ q_2 \\ x_M \\ y_M \\ \theta \end{bmatrix} \tag{1}$$

where:

- q_1 and q_2 are the angular positions of the wheels around their common axis.
- x_M and y_M are the coordinates, in the fixed frame F_0, of the point M located at mid distance on the wheels' axis. Any other point linked to the cart platform could also be used.
- θ is the angle which characterizes the cart's orientation with respect to the frame F_0.

In order to derive a kinematic model of the cart, we will further make the rolling-without-slipping assumption according to which the contact point of each wheel with the ground has zero velocity.

When using the parametrization 1, this assumption leads to the three following kinematic constraints:

$$\begin{array}{rcl} \dot{x_M} & = & \frac{r}{2}\cos\theta(\dot{q_1} + \dot{q_2}) \\ \dot{y_M} & = & \frac{r}{2}\sin\theta(\dot{q_1} + \dot{q_2}) \\ \dot{\theta} & = & \frac{r}{2R}(\dot{q_1} - \dot{q_2}) \end{array} \tag{2}$$

where:

- r is the length wheels' radius;
- R is half the wheels' axis length;
- each dotted variable refers to the time derivative of the corresponding variable.

The first two equations are said to be **nonholonomic** because they involve velocities and are not completely integrable. The third one is not nonholonomic because it is integrable. Indeed, it may also be written:

$$\theta = \frac{r}{2R}(q_1 - q_2) + constant \tag{3}$$

It is thus a holonomic constraint which indicates that the parametrization 1 is not minimal and that the cart's configuration space is in fact (under the rolling-without-slipping assumption) a four dimensional manifold.

By convention [9], the number n of the system's degrees of freedom (d.o.f.) is defined as the difference between the dimension m of the configuration space and

the number l_{nh} of independent nonholonomic constraints. In the present case, we have $m = 4$, $l_{nh} = 2$ and thus $n = 2$. It is found in this way that the system's d.o.f. number coincides with the number of the cart's actuators. Unlike some more complex robots, there is no redundancy in the motorization.

In this preliminary study, in order to avoid the complications that would result from having to introduce the cart's dynamic equations, we will consider that the wheels' angular velocities $\dot{q}_1$ and $\dot{q}_2$ can be taken as control variables. By setting:

$$U = \begin{bmatrix} \dot{q}_1 \\ \dot{q}_2 \end{bmatrix} \tag{4}$$

the system may then be written in a (non minimal) state equation form as:

$$\dot{X} = B(X)U \tag{5}$$

with:

$$B(X) = \begin{bmatrix} 1 & 0 \\ 0 & 1 \\ \frac{r}{2}\cos\theta & \frac{r}{2}\cos\theta \\ \frac{r}{2}\sin\theta & \frac{r}{2}\sin\theta \\ \frac{r}{2R} & -\frac{r}{2R} \end{bmatrix} \tag{6}$$

The system's nonlinearity in the state vector X and linearity in the control vector U clearly appear in equation 5.

2.2 Equations in a mobile frame

From this point on, we will use another parametrization of the system, obtained by expressing the cart's position coordinates in the basis of the frame F_M linked to the cart (see Fig.2) rather than in the basis of the fixed frame F_0.

More precisely, let:

- N denote a point linked to the cart, located at a distance $|d|$ from the wheels' axis and such that:

$$\vec{MN} = d\vec{i_M} \tag{7}$$

- x and y the coordinates of the vector $\vec{NO}$ in the basis of the mobile frame F_M:

$$\vec{NO} = x\vec{i_M} + y\vec{j_M} \tag{8}$$

- the configuration vector:

$$X = \begin{bmatrix} q_1 \\ q_2 \\ x \\ y \\ \theta \end{bmatrix} \tag{9}$$

- the auxiliary control vector:

$$U = \begin{bmatrix} v \\ \dot{\theta} \end{bmatrix} \tag{10}$$

where v is the cart's **translational velocity** along the $\vec{i_M}$ axis.

The control vector U is related to the wheel velocities by:

$$U = D \begin{bmatrix} \dot{q}_1 \\ \dot{q}_2 \end{bmatrix} \tag{11}$$

with:

$$D = \begin{bmatrix} \frac{r}{2} & \frac{r}{2} \\ \frac{r}{2R} & -\frac{r}{2R} \end{bmatrix} \tag{12}$$

Since the matrix D is nonsingular it is equivalent to work with the control variables $(v, \dot{\theta})$ or $(\dot{q}_1, \dot{q}_2)$.

We then obtain the following state equation (proof in Appendix A):

$$\dot{X} = B(X)U \tag{13}$$

with:

$$B(X) = \begin{bmatrix} & D^{-1} & \\ -1 & & y \\ 0 & & -(d+x) \\ 0 & & 1 \end{bmatrix} \tag{14}$$

A minimal state representation is obtained by removing, for example, the first or the last equation of this system.

It is already noticeable that the trigonometric functions $sin(.)$ and $cos(.)$ have disappeared in this new writing of the system. It will also become apparent later that this representation is well adapted to the treatment of the trajectory tracking problem.

Remark:

In this report, it will be assumed that the state vector can be measured by using appropriate sensors (odometry or others) and thus can be used as such in the control laws. Obviously, this is a simplifying assumption since it disregards real practical metrology problems. As a consequence, the application to physical systems of the control laws that will be proposed will normally require a complementary study of these problems (state reconstruction or estimation).

3 Weak controllability and state-feedback stabilization

3.1 The systems under consideration

In order to recall some basic control theory concepts, applicable to the mobile robot control problem, we consider a set of systems the equations of which are in the form:

$$\dot{X} = B(X)U \tag{15}$$

with:

- $X \in \mathrm{R}^m$, the system's state vector;
- $U \in \mathrm{R}^n$ $(n \leq m)$, the system's control vector;
- $B(X) = [B_1(X), ..., B_n(X)]$, a matrix of regular (say analytical, to simplify) real-valued functions. This is the system's control matrix.

We note that any system 15 is linear in the control U, and possibly nonlinear in the state X. In the particular case when the matrix B is a constant matrix, the system is linear and invariant.

We showed in the preceding section that the two-wheel driven cart satisfied an equation of this type.

In the neighbourhood of a stationary point $(X = X_0, U = 0)$ of 15, a linear approximation of 15 is:

$$\dot{X} = B(X_0)U \tag{16}$$

This system is often called the **pseudo-linearized** (p.l.) system of 15 at the point $(X_0, 0)$.

The reason for introducing this p.l. system is that some control properties of the nonlinear system 15 may be deduced from those of the p.l. system, the study of which is easier. However, we will see that the nonlinear system 15 may also have properties that the p.l. system does not have. Besides, this will be one of the consequences of nonholonomy in the case of mobile robots.

3.2 The associated Control Lie Algebra

Let $\Delta_0(X)$ be the vector subspace in R^m spanned by the control matrix column-vectors $B_i(X)$ $(1 \leq i \leq n)$. According to equation 15, this subspace is tangent to the system's trajectories passing through the point X. In the language of differential geometry, the mapping $X \longrightarrow \Delta_0(X)$ is called a **distribution.** If the dimension of $\Delta_0(X)$ is the same for all X, the distribution is said to be **nonsingular** [10].

We recall that the **Lie bracket** of a pair of vector-valued functions (or vector fields) $B_1(X)$ and $B_2(X)$ is the new vector-valued function defined as:

$$[B_1(X), B_2(X)] = \frac{\partial B_2}{\partial X}(X)B_1(X) - \frac{\partial B_1}{\partial X}(X)B_2(X) \tag{17}$$

The vector $[B_1(X), B_2(X)]$ also belongs to R^m. When all vectors $[B_i(X), B_j(X)]$ belong to $\Delta_0(X)$ the distribution Δ_0 is said to be **involutive.**

Let $\mathcal{C}$ denote the smallest subalgebra, under the Lie bracket operation, which contains the vector fields B_i $(1 \leq i \leq n)$, and Δ the associated distribution:

$$\Delta(X) = span\{\tau(X) : \tau \in \mathcal{C}\} \tag{18}$$

Δ is the involutive closure of the distribution Δ_0 and $\mathcal{C}$ is the **Control Lie Algebra** associated with the system 15 [10,11,12].

By definition of $\Delta(X)$:

$$\Delta_0(X) \subseteq \Delta(X) \tag{19}$$

$$dim\ \Delta_0(X) \ \leq\ dim\ \Delta(X) \ \leq\ m \tag{20}$$

3.3 Frobenius Theorem and nonholonomy

A direct consequence of Frobenius Theorem [10] is that the equations of system 15 are completely integrable if and only if the distribution $\Delta_0(X)$ is involutive.

For example, in the case of a linear system where the matrix B is constant, all Lie brackets are zero, the distribution $X \mapsto \Delta_0$ is involutive, and we find again in this way that the system is completely integrable.

In the case of the wheeled cart, we saw that the system's state equation contained two nonholonomic (thus non integrable) equations. Therefore, we can already conclude that the associated distribution $\Delta_0(X)$ cannot be involutive. This will also be checked later on by calculating the Lie brackets explicitly. The mere existence of nonholonomic constraints thus prevents the distribution $\Delta_0(X)$ associated with a mobile robot from being involutive and implies that:

$$dim\ \Delta_0(X) \ <\ dim\ \Delta(X) \tag{21}$$

The fact that linearization has the effect of changing this inequality into an equality explains, in view of an important controllability theorem recalled next, why the nonlinear system 15 and the corresponding p.l. system 16 cannot share the same control properties.

3.4 Weak controllability (or accessibility)

A fundamental contribution of nonlinear control theory is to have related the concept of controllability of a system to the dimension of the corresponding Control Lie Algebra [10,11,12]. For instance, in the case of system 15, the property of (weak) controllability (or accessibility) ,i.e. when any state X in the neighbourhood of any initial state X_0 can be reached under the action of piecewise constant inputs $U(t)$, is linked to the dimension of the susbspace $\Delta(X)$. More precisely, **the system 15 is**

(weakly) controllable on R^m if and only if $dim\ \Delta(X) = m$ for all $X \in R^m$ (Controllability rank condition).

In the particular case when the system 15 is nonholonomic (not completely integrable) we saw that $dim\ \Delta_0(X) < dim\ \Delta(X) \leq m$. Thus, if $dim\ \Delta_0(X) = n$ and $m = n + 1$, then $dim\ \Delta(X) = m$ and we can conclude that the system is (weakly) controllable. This result was used in [6] to establish the controllability in position and orientation of a car-like robot.

example 1: linear invariant system

Consider the linear invariant system:

$$\dot{X} = BU \quad ; \ dim\ B = (m \times n) \quad ; \ m \leq n \tag{22}$$

We have:

$$dim\ \Delta = dim\ \Delta_0 = rank(B) \tag{23}$$

we find again the known result that this system is controllable if and only if $m = n$ and the matrix B is nonsingular.

example 2: rigid robot manipulators

Taking $X = q$ and $U = \dot{q}$, where q is the vector of the robot joint coordinates (this is a set of generalized coordinates), leads to the equation:

$$\dot{X} = U \tag{24}$$

It is not surprising to find again that robot manipulators are controllable in the joint space.

example 3: two-wheel driven robot cart

Since the joint coordinates q_1 and q_2 are linked to the orientation θ according to equation 3, we already know that these three variables cannot be controlled independently.

Let us thus consider a minimal configuration state vector, by dropping q_2 for example. A possible choice is:

$$X = \begin{bmatrix} q_1 \\ x_M \\ y_M \\ \theta \end{bmatrix} \tag{25}$$

where x_M and y_M are the coordinates of the point M on the wheels' axis, at mid-distance of the wheels, in the fixed frame F_0.

From equations 4-6 we have:

$$\dot{X} = B(X)U \tag{26}$$

with:

$$U = \begin{bmatrix} \dot{q}_1 \\ \dot{q}_2 \end{bmatrix} \tag{27}$$

$$B(X) = \begin{bmatrix} 1 & 0 \\ \frac{r}{2}c\theta & \frac{r}{2}c\theta \\ \frac{r}{2}s\theta & \frac{r}{2}s\theta \\ \frac{r}{2R} & -\frac{r}{2R} \end{bmatrix} \tag{28}$$

Thus:

$$B_1(X) = \begin{bmatrix} 1 \\ \frac{r}{2}c\theta \\ \frac{r}{2}s\theta \\ \frac{r}{2R} \end{bmatrix} \quad , \quad B_2(X) = \begin{bmatrix} 0 \\ \frac{r}{2}c\theta \\ \frac{r}{2}s\theta \\ -\frac{r}{2R} \end{bmatrix} \tag{29}$$

In this case we have $n = 2$ and $m = 4$.

The vectors $B_1(X)$ and $B_2(X)$ being independent, the matrix $B(X)$ is of full rank equal to 2, and thus $dim\ \Delta_0(X) = 2$.

In order to determine the dimension of the Control Lie Algebra, let us calculate a few Lie brackets. We find:

$$B_3(X) = [B_1(X), B_2(X)] = \frac{r^2}{2R} \begin{bmatrix} 0 \\ -s\theta \\ c\theta \\ 0 \end{bmatrix} \tag{30}$$

$$B_4(X) = [B_1(X), B_3(X)] = -\frac{r^3}{4R^2} \begin{bmatrix} 0 \\ c\theta \\ s\theta \\ 0 \end{bmatrix} \tag{31}$$

and:

$$det[B_1(X), B_2(X), B_3(X), B_4(X)] = -\frac{r^6}{16R^4} \tag{32}$$

Since the vectors $B_j(X)$ $(1 \leq j \leq 4)$ are independent we can already conclude that $dim\ \Delta(X) = m = 4$.

Therefore the cart is controllable in q_1, x_M, y_M and θ. Moreover, the controllability property is global: whatever the initial and final configurations X_i and X_f, there exists theoretically a piecewise constant control $U_{i,f}(t)$ which drives the cart from X_i to X_f.

It is noticeable that the cart is controllable not only in (x_M, y_M, θ), as already established by several authors, but also in one of the wheels' angular positions. For instance, it is possible to bring the cart to any desired position/orientation with one of the wheels in the same position as initially.

Any other parametrization of the cart's configuration space could have been used to establish the cart's controllability. For example, by replacing the coordinates x_M and y_M by the coordinates x and y of the vector $\vec{NO}$ in the basis of the mobile frame F_M (see **Fig.2**), and by taking the translational and rotational speeds v and $\dot{\theta}$ as control variables, we obtain, from equations 9-14, the following system:

$$\dot{X} = B(X)U \tag{33}$$

with:

$$X = \begin{bmatrix} q_1 \\ x \\ y \\ \theta \end{bmatrix} \quad , \quad U = \begin{bmatrix} v \\ \dot{\theta} \end{bmatrix} \quad , \quad B(X) = \begin{bmatrix} \frac{1}{r} & \frac{R}{r} \\ -1 & y \\ 0 & -(d+x) \\ 0 & 1 \end{bmatrix} \tag{34}$$

Then:

$$B_1(X) = \begin{bmatrix} \frac{1}{r} \\ -1 \\ 0 \\ 0 \end{bmatrix} \quad , \quad B_2(X) = \begin{bmatrix} \frac{R}{r} \\ y \\ -(d+x) \\ 1 \end{bmatrix}$$

$$B_3(X) = [B_1(X), B_2(X)] = \frac{\partial B_2}{\partial X} B_1 = \begin{bmatrix} 0 \\ 0 \\ 1 \\ 0 \end{bmatrix} \tag{35}$$

$$B_4(X) = [B_2(X), B_3(X)] = -\frac{\partial B_2}{\partial X} B_3 = \begin{bmatrix} 0 \\ -1 \\ 0 \\ 0 \end{bmatrix}$$

$$det[B_1(X), B_2(X), B_3(X), B_4(X)] = \frac{1}{r}$$

Notice that the system's controllability is independent of the choice of the parameter d, and thus of the choice of the point N on the cart.

3.5 Feedback stabilization

In the case of nonlinear systems, it does matter to differentiate the notion of (weak) controllability, that was just briefly recalled, from the notion of feedback stabilization that we are about to develop and on which the remainder of this report will focus.

For the considered class of systems, controllability on R^m indicates that there exists a control $U(t)$ able to drive the system from the initial state X_i to any final state X_f. For example, if $X_f = 0$, then there exists some control $U_1(t)$ (obviously

not unique) that drives the system from the initial state X_1 to the final state 0. To another initial state X_2 corresponds a control $U_2(t)$ different from $U_1(t)$.

The property of controllability thus informs us of the theoretical existence of control laws, but does not provide us with a methodology for the calculation of these controls. For practical purposes, the design control problem thus remains to be solved. Furthermore, **an important difference with the (invariant) linear case is that the controllability of a nonlinear system does not imply the existence of a stabilizing feedback control, i.e. a control law $U(X)$ (smooth function of the state X) able to make the state converge to 0 independently of the initial state X_i.** Indeed, it is not proven that the set of open loop controls $U(t)$ that drive the system state to zero contains a subset of controls that can be written in the form $U(X(t))$. While the notions of controllability and feedback stabilizability are strongly related in the linear case, this is no longer true in the nonlinear case. Controllability is necessary to feedback stabilizability, but the reverse does not hold.

On the other hand, the advantages that can be expected from using a stabilizing feedback control are well known in linear control theory: insensitivity with respect to initial conditions (since the control expression does not explicitly depend on the initial conditions), robustness with respect to perturbations acting on the system and with respect to modeling errors... For these reasons, all controlled physical systems are equipped with feedback control loops. For a large part, control design consists of evaluating the possibilities of both open loop control (much related to trajectory plannification in the case of mobile robots) and feedback control so as to find the right balance when mixing those two components.

In the next sections the study focusses on the control of the two-wheel driven cart in Cartesian space, and more specifically on the feedback control aspects of the problem.

4 Feedback stabilization of the cart around a terminal configuration

4.1 Existence of a position/orientation stabilizing feedback

Since the control of the wheels' angular positions is of little practical interest, we will restrict the study to the problem of controlling the cart's position and orientation.

Let us thus consider the following state vector:

$$X = \begin{bmatrix} x \\ y \\ \theta \end{bmatrix} \tag{36}$$

where x and y are the coordinates of the vector $\vec{NO}$ in the mobile frame F_M and

θ is the cart's orientation angle.

From 33 and 34, the system's equation is:

$$\dot{X} = B(X)U \tag{37}$$

with:

$$U = \begin{bmatrix} v \\ \dot{\theta} \end{bmatrix} \tag{38}$$

$$B(X) = \begin{bmatrix} -1 & y \\ 0 & -(d+x) \\ 0 & 1 \end{bmatrix} \tag{39}$$

The preceding controllability study showed the existence of controls $U(t)$ able to drive the cart from any initial configuration to the final configuration $X_f = 0$. It happens that, in the case of this cart, it is particularly simple to determine such a control by combining pure translational and rotational mouvements. The values of the **open loop control** so obtained depend on the initial state X_i. However, since the simple model 37-39, on which the control calculation is based, does not reflect the physical reality exactly, it is unlikely that the application of this control will make the cart reach the desired final configuration. This control should rather be considered as a **reference control**, the use of which in the model equation 37 provides us, after integration of this equation, with a **reference trajectory**. The problem of regulation around this reference trajectory will be treated later on.

For the moment, we assume that the cart is initially in the neighbourhood of the point $X_f = 0$, and we would like to know if there exists a state dependent differentiable control $U(X)$ able to drive X to 0.

A classical result of control theory is that controllability of the p.l. system associated with the nonlinear system 37 is **sufficient** to ensure the existence of a locally stabilizing feedback. When this condition is satisfied, any feedback of the form $U = KX$ which stabilizes the p.l. system also stabilizes (at least locally) the nonlinear system.

Unfortunately, in the case of the wheeled cart the equation of the p.l. system is:

$$\dot{X} = B(0)U \tag{40}$$

with:

$$B(0) = \begin{bmatrix} -1 & 0 \\ 0 & -d \\ 0 & 1 \end{bmatrix} \tag{41}$$

and since the matrix $B(0)$ is not square, this system is not controllable. We find again the fact that linearization may result in a loss of controllability.

Another result is that if the p.l. system is not stabilizable, i.e. when its non-controllable modes are unstable, then there **does not exist** a stabilizing feedback for the nonlinear system.

But, again, this result does not apply to the cart because the nullity of the p.l. system state matrix indicates that the non-controllable modes are marginally stable (poles on the imaginary axis).

Therefore, the only cases for which it is not possible to conclude immediately, as for the existence of stabilizing feedbacks, are the **critical** cases for which the p.l. system is neither controllable, nor strictly unstable in closed loop. Obviously, all nonlinear systems of the form 15 are critical cases whenever the matrix $B(X)$ is rectangular with $n < m$.

However, a theorem proposed by Brockett [13] will allow us to make a conclusion. Indeed, according to this theorem a condition **necessary** to the existence of stabilizing feedbacks for any system 15 is that the function $f(X,U) = B(X)U$ must be onto an open set of R^m containing 0. In our case, this means that the system of equations:

$$\begin{bmatrix} -1 & y \\ 0 & -(d+x) \\ 0 & 1 \end{bmatrix} \begin{bmatrix} v \\ \dot{\theta} \end{bmatrix} = \begin{bmatrix} \epsilon_1 \\ \epsilon_2 \\ \epsilon_3 \end{bmatrix} \tag{42}$$

must possess a solution $(x, y, \theta, v, \dot{\theta})$ for all ϵ_i $(1 \leq i \leq 3)$ close enough to zero. But it is readily verifiable that this is not the case since the previous system does not have a solution whenever $\epsilon_2 \neq 0$ and $\epsilon_3 = 0$.

This condition thus is not satisfied and **there does not exist a stabilizing C^1 feedback control $U(X)$ for the two-wheel driven cart.** There is no control $U(X)$ which ensures simultaneous convergence of x, y and θ to zero whatever the initial conditions.

Therefore, we have just seen that, although the cart is controllable in position and orientation, it is not stabilizable by using pure state feedback.

4.2 Feedback stabilization of the position of a cart's point

Let us now try to determine whether there exists a feedback capable of stabilizing the cart's position only, independently of the orientation's behaviour.

To do so, we are led to consider the reduced system:

$$\dot{X} = B(X)U \tag{43}$$

with:

$$X = \begin{bmatrix} x \\ y \end{bmatrix} \quad , \quad B(X) = \begin{bmatrix} -1 & y \\ 0 & -(d+x) \end{bmatrix} \tag{44}$$

Let us distinguish two cases, according to whether the cart's point, the coordinates of which are to be controlled, is located on the wheels' axis or not.

case 1: $d = 0$

In this case the cart's points M and N coincide and we will study the possibility of transfering the point M, located on the wheels' axis, to the origin O of the fixed frame F_0, under the action of a feedback control law.

Is the corresponding p.l. system controllable? The answer is no because the control matrix:

$$B(0) = \begin{bmatrix} -1 & 0 \\ 0 & 0 \end{bmatrix} \tag{45}$$

is singular in this case.

This lack of controllability results simply because the cart cannot move along the wheels' axis instantaneously.

We are thus again confronted with the case of a critical system. However, Brockett's theorem no longer allows us to conclude the non-existence of a stabilizing feedback because the function $f(X,U) = B(X)U$ is onto an open set of R^2 containing 0, in this case.

In fact, a conclusion will be reached by showing that the following control:

$$U = \begin{bmatrix} v \\ \dot{\theta} \end{bmatrix} = \begin{bmatrix} k_1 x \\ k_2 y \end{bmatrix} \quad ; \; k_1 > 0, \; k_2 \neq 0 \tag{46}$$

is stabilizing.

To show this, we study the solutions of the closed-loop system equation, which, in view of 43, 44 and 46, writes as:

$$\begin{cases} \dot{x} = -k_1 x + k_2 y^2 \\ \dot{y} = -k_2 x y \end{cases} \tag{47}$$

To simplify the exposition, existence and unicity of the solutions of 47 will be accepted without proof.

Let us consider the following **Lyapunov function**:

$$V(X) = \frac{1}{2}(x^2 + y^2) \tag{48}$$

The time-derivative of this function is:

$$\dot{V}(X) = x\dot{x} + y\dot{y} \tag{49}$$

and, by using 47 in 49:

$$\dot{V}(X) = -k_1 x^2 \quad \leq 0 \tag{50}$$

This already shows that x tends to zero and that the function $V(X)$ decreases towards some value which is either positive or equal to zero.

Furthermore, according to **Lasalle's theorem** ([14], p. 58), we know that the solution of 47 converge to the largest set $\mathcal{I}$ left invariant by 47 and contained in the set defined by $\dot{V}(X) = 0$. Therefore, if this invariant set $\mathcal{I}$ reduces to the single point $X = 0$, we will also have shown that y tends to zero.

In order to determine the set $\mathcal{I}$, let us set $x = 0$ $(\forall t)$ in the equations 47. We obtain:

$$\begin{cases} 0 = k_2 y^2 \\ \dot{y} = 0 \end{cases} \tag{51}$$

and thus:

$$y = 0 \tag{52}$$

Therefore we indeed have $\mathcal{I} = \{0\}$, and we can conclude from there that the control 46 ensures the convergence of x and y to zero.

Remarks:

- The control gains k_1 and k_2 do not have to be constant. One can take, for example, any strictly positive function $k_1(X)$ and any strictly positive (or negative) function $k_2(X)$. Other possibilities will be proposed later on.
- When these gains are chosen constant, the convergence of X to zero is not exponential in the general case (a consequence of the non-controllability of the p.l. system).

A simulation of the motion of the cart controlled by 46 is represented in **Fig.3**. This simulation shows how the cart's trajectory wraps around the origin and suggests the non-convergence of the angle θ in the general case. For this reason, the control 46 is probably of little practical interest. Nevertheless, the study of this case remains conceptually interesting because it pointed out an asymptotical convergence result which could not have been obtained by working on the p.l. system only.

case 2: $d \neq 0$

In this case we try to control the cart's point N located at a distance $|d|$ from the wheels' axis.

Is the p.l. system controllable? This time the answer is yes because the control matrix:

$$B(0) = \begin{bmatrix} -1 & 0 \\ 0 & -d \end{bmatrix} \tag{53}$$

is nonsingular.

Moreover, any stabilizing linear feedback for the p.l. system is also **exponentially stabilizing** ,at least locally (i.e. when the point N is close to the point O initially), for the nonlinear system.

It is easy to verify that such a control is, for example:

$$U = \begin{bmatrix} k_1 x \\ sign(d) k_2 y \end{bmatrix} \quad ; \; k_1 > 0, \; k_2 > 0 \tag{54}$$

It is in fact possible to show that this control is **globally** exponentially stabilizing. Indeed, let us consider again the Lyapunov function:

$$V(X) = \frac{1}{2}\|X\|^2 \tag{55}$$

We verify that the derivative of this function is now:

$$\begin{aligned} \dot{V}(X) &= -k_1 x^2 - k_2 |d| y^2 \\ &\leq -\, inf(k_1, k_2|d|)\|X\|^2 \end{aligned} \tag{56}$$

Whatever the initial cart's position, $\|X\|$ converges exponentially to 0 with a rate at least equal to $inf(k_1, k_2|d|)$.

Moreover, the exponential convergence of y to 0 induces, from the control expression, the one of $\dot{\theta}$ and thus the convergence of the angle θ to some limit value.

A simulation of this control is represented in **Fig.4** which is to be compared to **Fig.3** so as to visualize the interest of choosing $d \neq 0$.

Of course, the control 54 is not the only one to possess stabilizing properties. For example, a classical nonlinear control design technique consists of looking for a **feedback control that linearizes the controlled system** [10]. When applied to the system 43 44, this technique leads to inverting the control matrix and setting:

$$U = B(X)^{-1} U' \tag{57}$$

which leaves us with the linear system:

$$\dot{X} = U' \tag{58}$$

A logical choice for the auxiliary control vector U' then is:

$$U' = AX \tag{59}$$

where A is a "stable" matrix (i.e. the eigenvalues of which have negative real parts).

The exponential convergence of $\|X\|$ to 0 results from the stability of the linear controlled system $\dot{X} = AX$. From 57 and 59 the corresponding control is:

$$U = B(X)^{-1}AX \tag{60}$$

and the explicit calculation of this control gives:

$$\begin{bmatrix} v \\ \dot{\theta} \end{bmatrix} = \begin{bmatrix} -(a_{11} + a_{21}\frac{y}{d+x})x - (a_{12} + a_{22}\frac{y}{d+x})y \\ -\frac{a_{21}}{d+x}x - \frac{a_{22}}{d+x}y \end{bmatrix} \tag{61}$$

with:

$$A = \begin{bmatrix} a_{11} & a_{12} \\ a_{21} & a_{22} \end{bmatrix} \tag{62}$$

Notice that this control is not defined when $x = -d$, i.e. when the control matrix $B(X)$ is singular. For this reason, the utilization of this control requires the initial position of the cart to be such that:

$$\begin{cases} x(0) > -d & if\ d > 0 \\ x(0) < -d & if\ d < 0 \end{cases} \tag{63}$$

If the matrix A is chosen negative definite, this control is safe in the domain defined by $\|X(0)\| < |d|$.

It is also noticeable that the set of linearizing controls 61 does not contain the linear controls 54, while the latter are simpler and also ensure exponential convergence. Moreover, they are defined everywhere. For these reasons, feedback linearization does not seem to be the best solution here (at least for this particular parametrization of the cart's configuration).

Another possible nonlinear control, which does not linearize the system, is:

$$U = \begin{bmatrix} v \\ \dot{\theta} \end{bmatrix} = \begin{bmatrix} k_1 x + k_2(d+x)y^2 \\ k_2(d+x)y \end{bmatrix} \quad ;\ k_1 > 0,\ k_2 > 0 \tag{64}$$

Then, the controlled cart's equations are, by using 64 in 43:

$$\begin{cases} \dot{x} = -k_1 x \\ \dot{y} = -k_2(d+x)^2 y \end{cases} \tag{65}$$

The exponential convergence of x to 0, with a uniform convergence rate equal to k_1, results from the first equation. The one of y, with a convergence rate in the order of $k_2 d^2$ when x becomes small, results from the second equation.

It is also possible to choose the control gains so as to obtain **uniformly bounded** stabilizing feedbacks and respect the cart's speed limitations. For example, by choosing the gains k_1 and k_2 of control 54 as follows:

$$\begin{cases} k_1(x) = \frac{k_1'}{1+|x|} \\ k_2(x) = \frac{k_2'}{1+|y|} \end{cases} \qquad k_1' > 0 \, , k_2' > 0 \tag{66}$$

control boundedness is ensured, since we then have:

$$\begin{array}{l} |v| < k_1' \\ |\dot{\theta}| < k_2' \end{array} \tag{67}$$

while exponential convergence of x and y to zero is still guaranteed when the point N gets close to the point O.

4.3 Feedback stabilization of another pair of state variables

It was thus shown that it was possible, via feedback control, to bring the cart's point N to any point in the plane (since the choice of the origin O is arbitrary). We also saw that it was then preferable to choose the point N away from the wheels' axis ($d \neq 0$). In the same way, it is possible to use feedback so as to control the pair of variables (x, θ) instead of the pair (x, y). In this case, we are led to consider the following system:

$$\dot{X} = B(X)U \tag{68}$$

with:

$$X = \begin{bmatrix} x \\ \theta \end{bmatrix} \quad , \quad B(X) = \begin{bmatrix} -1 & y \\ 0 & 1 \end{bmatrix} \tag{69}$$

The corresponding p.l. system is controllable and we leave to the reader the task of verifying that the two following controls (among many others):

$$U = \begin{bmatrix} v \\ \dot{\theta} \end{bmatrix} = \begin{bmatrix} k_1 x \\ -k_2(\theta - \theta_c) \end{bmatrix} \quad ; \; k_1 > 0, \; k_2 > 0 \tag{70}$$

$$U = \begin{bmatrix} v \\ \dot{\theta} \end{bmatrix} = \begin{bmatrix} k_1 x - k_2 y(\theta - \theta_c) \\ -k_2(\theta - \theta_c) \end{bmatrix} \quad ; \; k_1 > 0, \; k_2 > 0 \tag{71}$$

(θ_c: desired angle)

yield the convergence of x and $(\theta - \theta_c)$ to zero.

However, the practical value of these controls is limited by the fact that the convergence of the point N to the point O is no longer ensured since the coordinate y is not controlled.

On the other hand, it is not possible to stabilize the variables y and θ altogether by using pure feedback control. Indeed, if it was not so it would be possible, according to what precedes, to stabilize x, y and θ simultaneously (which is not true, as already established).

To summarize this section, is has been shown that the cart's (weak) controllability in position and orientation does not imply feedback stabilizability. On the other hand, feedback stabilization of the position only is possible. In this case, it is preferable to control a cart's point not located on the wheels' axis in order to ensure good convergence properties (exponential convergence of x and y to zero and convergence of θ to some limit angle). Several control laws, based on various design techniques, have been proposed.

In the remainder of this study, the regulation problem treated previously finds a logical extension in the more general problem of trajectory tracking in Cartesian space. We will show, then, that controllability and feedback stabilizability can be partly reconciled by considering "mixed" control laws in the form $U(X,t)$, where the variable t is used to parametrize the feedforward part of the control.

5 Tracking in Cartesian space

5.1 Position servoing of a point of the two-wheel driven cart

Up to now, we have considered the problem of stabilizing the cart around a fixed position of reference, arbitrarily chosen as the origin of the frame F_0. We now consider the problem of regulating the distance between the cart's point N, not located on the wheels' axis, and a **reference point** P moving in the plane.

Let:

- $x_p(t)$ and $y_p(t)$ be the coordinates of the point P in the fixed frame F_0:

$$\vec{OP} = x_p\vec{i_0} + y_p\vec{j_0} \tag{72}$$

- x and y be the coordinates of the vector $\vec{NP}$ in the basis of the mobile frame F_M tied to the cart:

$$\vec{NP} = x\vec{i_M} + y\vec{j_M} \tag{73}$$

The model equation that relates the time-derivatives of x and y to those of x_p and y_p is the equation 135 derived in Appendix A. This equation may also be written as:

$$\dot{X} = B(X)U + W(\theta,t) \tag{74}$$

with:

$$X = \begin{bmatrix} x \\ y \end{bmatrix} \quad , \quad U = \begin{bmatrix} v \\ \dot{\theta} \end{bmatrix}$$
$$B(X) = \begin{bmatrix} -1 & y \\ 0 & -(d+x) \end{bmatrix} \quad , \quad W(\theta,t) = \begin{bmatrix} \cos\theta & \sin\theta \\ -\sin\theta & \cos\theta \end{bmatrix} \begin{bmatrix} \dot{x}_p \\ \dot{y}_p \end{bmatrix} \tag{75}$$

The objective is to determine a control U capable of keeping the distance $||\vec{NP}|| = (x^2+y^2)^{\frac{1}{2}}$ small, or, even better, having it converge to zero. Moreover, this control should be robust in the sense that it should still perform well in practice, when the ideal cart's model that we consider does not reflect the reality exactly. This robustness requirement disqualifies pure open-loop (feedforward) controls $U(t)$ calculated on the basis of the cart's model. We are thus going to look for a feedback control in the form $U(X)$ or, more generally, in the form $U(X,t)$.

Remark:

Notice that the state vector X depends now not only on the cart's coordinates in the fixed frame F_0 but also, implicitly, on the variable t used to parametrize the motion of the point P. For this reason, the properties of the controls that will be proposed in the forthcoming sections do not have to coincide with those of the controls that were considered in the regulation case, even when the control expressions are the same in both cases. It is only when the point P will be motionless that the coincidence will be complete. This remark, which may seem anodine, is in fact important to understanding some control property discrepancies that will appear between the trajectory tracking and the regulation cases.

A first possible candidate is the linear control 54 which, as seen before, ensures the convergence of x and y to zero when the point P is motionless, i.e. when $\dot{x}_p = \dot{y}_p = 0$. Let us recall the expression of this control:

$$U(X) = \begin{bmatrix} v \\ \dot{\theta} \end{bmatrix} = \begin{bmatrix} k_1 x \\ sign(d) k_2 y \end{bmatrix} \quad ; k_1 > 0,\ k_2 > 0 \tag{76}$$

In order to study the tracking capabilities of this control, we consider again the Lyapunov function:

$$V(X) = \frac{1}{2}||X||^2 \tag{77}$$

Taking 74, 75 and 76 into account, the derivation of $V(X)$ gives:

$$\begin{aligned} \dot{V}(X) &= X^T \dot{X} \\ &= -X^T \begin{bmatrix} k_1 & 0 \\ 0 & k_2|d| \end{bmatrix} X + X^T W \end{aligned} \tag{78}$$

Thus:

$$\dot{V}(X) \leq -inf(k_1, k_2|d|)\ \|X\|^2 + \|W\|\ \|X\| \tag{79}$$

Let us denote the speed of the point P as $|v_p|$:

$$|v_p| = \frac{1}{2}(\dot{x}_p^2 + \dot{y}_p^2)^{1/2} \tag{80}$$

From the definition of W (75) we have:

$$\|W\| = |v_p| \tag{81}$$

Then, it comes from 79:

$$\dot{V}(X) < 0 \qquad if \qquad \|X\| > \frac{|v_p|_{max}}{inf(k_1, k_2|d|)} \tag{82}$$

This yields that, asymptotically, the distance between the cart's point N and the point P cannot exceed the value $|v_p|_{max}/inf(k_1, k_2|d|)$. Thus, if the speed of the point P is bounded, then the tracking error is also bounded. Furthermore, it is possible to make this error as small as desired by making the control gains k_1 and k_2 large enough. However, this error tends to zero only if, at some time, the point P stops moving (i.e. if $|v_p| = 0$).

A second possible set of controls is:

$$U(X, \theta, t) = \begin{bmatrix} v \\ \dot{\theta} \end{bmatrix} = \begin{bmatrix} k_1 x + w_1(\theta, t) \\ sign(d) k_2 y + w_2(\theta, t)/d \end{bmatrix} \quad ;\ k_1 > 0,\ k_2 > 0 \tag{83}$$

where w_1 and w_2 are the two components of the vector W.

Indeed, one easily verifies that we have in this case, with the same function $V(X)$ as above:

$$\dot{V}(X) = -k_1 x^2 - k_2|d|y^2 \quad (\leq\ 0) \tag{84}$$

and this relation yields the exponential convergence of x and y to zero if the gains k_1 and k_2 are bounded from below by some positive real number.

Remarks:

- By comparison with the previous control, the convergence of the tracking error to zero is made possible by the introduction of the "anticipation" terms $w_1(\theta, t)$ (for v) and $w_2(\theta, t)$ (for $\dot{\theta}$) in the control expression. The control 83 is no longer a pure state-feedback control.

- It is possible to bound the size of the control vector by choosing adequate nonlinear gains k_1 and k_2.

Although the preceding analysis does not provide information concerning the asymptotical behaviour of the variable θ, one may try to characterize this behaviour in some simple cases. For example, let us assume that the point P moves at constant speed $|v_p|$ in a certain direction characterized by the angle θ_p such that:

$$\begin{cases} \theta_p &= constant \\ \dot{x}_p &= v_p \cos\theta_p \\ \dot{y}_p &= v_p \sin\theta_p \end{cases} \tag{85}$$

The sign of v_p may be either positive or negative.

From the definition 75 of the vector W and relation 85, one verifies that this vector can also be written:

$$W = \begin{bmatrix} w_1 \\ w_2 \end{bmatrix} = \begin{bmatrix} v_p \cos\tilde{\theta} \\ -\, v_p \sin\tilde{\theta} \end{bmatrix} \tag{86}$$

with:

$$\tilde{\theta} = \theta - \theta_p \tag{87}$$

Let us now examine the behaviour of the variable $\tilde{\theta}$ in this case. Knowing that x and y converge to zero, relation 83 tells us that the asymptotical evolution of $\tilde{\theta}$ is given by:

$$\begin{aligned} \dot{\tilde{\theta}} &= w_2/d \\ &= -v_p/d \sin\tilde{\theta} \end{aligned} \tag{88}$$

This equation is in fact exact when the points P and N coincide from the beginning. It yields:

$$\frac{d}{dt}(\sin\frac{\tilde{\theta}}{2})^2 = -\frac{v_p}{2d}(\sin\tilde{\theta})^2 \tag{89}$$

The function $(\sin\frac{\tilde{\theta}}{2})^2$ being bounded from above and below and the sign of the second member of 89 being constant, it comes from 89 that $\sin\tilde{\theta}$ tends to zero. Thus $\tilde{\theta}$ tends to $k\pi$ ($k \in$ Z). We leave to the reader the task of verifying that, depending on the sign of (v_p/d), the even (resp. odd) values of k correspond to a stable (resp. unstable) equilibrium, or the converse. The practical important fact is that a change in the sign of v_p, corresponding to a turn back of the point P, induces a new stable equilibrium of the angle θ different from the previous one of $\pm\pi$. Stated otherwise, the cart subjected to the control 83 tends to make a half turn each time that the point P turns back. This is illustrated in **Fig.5** where the control 83 is

simulated and where the point P moves on the Ox_0 axis with velocity $v_p = \sin t$. This phenomenon, which can easily be intuited, is a consequence of the choice that we have made of controlling the position of a cart's point (not located on the wheels' axis) only. It may clearly be undesirable when, for example, the objective is to have a back-and-forth motion of the cart according to a parking-like manoeuvre. In order to overcome this problem, active control of the cart's orientation, in addition to position control, appears to be necessary. However, we are going to see that, by doing so, it is no longer possible to ensure unconditional convergence of the variable y to zero.

5.2 Control in position and orientation

We now consider the problem of regulating both the cart's position and orientation around the position/orientation of an ideal "virtual" **reference cart**, the trajectory of which is predetermined and parametrized by the variable t. When the reference cart is motionless, this problem falls back on the one treated in section 3.5 where we saw that there did not exist a stabilizing feedback in this case. We are going to see that the mere fact of making the reference cart move leads to somewhat different results.

5.2.1 Equations of the system

The controlled cart's point, distant of $|d|$ from the wheels' axis, is denoted as before as N. The corresponding point on the reference cart is denoted as N_r. The coordinates of the vector $\vec{NN_r}$ in the basis of the mobile frame F_M tied to the controlled cart are x and y:

$$\vec{NN_r} = x\vec{i}_M + y\vec{j}_M \tag{90}$$

We also define the orientation error:

$$\tilde{\theta} = \theta - \theta_r \tag{91}$$

where θ and θ_r characterize the controlled cart's orientation and the reference cart's orientation respectively.

The state vector that we wish to regulate to zero now is:

$$X = \begin{bmatrix} x \\ y \\ \tilde{\theta} \end{bmatrix} \tag{92}$$

Let $v_r(t)$ denote the reference cart's translational velocity, and $(x_r(t), y_r(t))$ the coordinates of the point N_r in the fixed frame F_0. The variables v_r, θ_r, x_r and y_r

are related to each other by the following system of equations associated with the reference cart's motion:

$$\begin{bmatrix} v_r \\ d\dot{\theta}_r \end{bmatrix} = \begin{bmatrix} \cos\theta_r & \sin\theta_r \\ -\sin\theta_r & \cos\theta_r \end{bmatrix} \begin{bmatrix} \dot{x}_r \\ \dot{y}_r \end{bmatrix} \tag{93}$$

Let:

$$R_{Mr} = \begin{bmatrix} \cos\tilde{\theta} & \sin\tilde{\theta} \\ -\sin\tilde{\theta} & \cos\tilde{\theta} \end{bmatrix} \tag{94}$$

be the rotation matrix between the frames F_r (linked to the reference cart) and F_M (linked to the controlled cart), and $\vec{V}_{N_r/F_0}$ the velocity vector of the point N_r in the fixed frame F_0. The coordinates of this vector in the basis of F_M, on one hand, and in the basis of F_r, on the other hand, are related by:

$$\left[\vec{V}_{N_r/F_0}\right]_{F_M} = R_{Mr} \left[\vec{V}_{N_r/F_0}\right]_{F_r} \tag{95}$$

But:

$$\vec{V}_{N_r/F_0} = v_r\vec{i}_r + d\dot{\theta}_r\vec{j}_r \tag{96}$$

Thus:

$$\left[\vec{V}_{N_r/F_0}\right]_{F_r} = \begin{bmatrix} v_r \\ d\dot{\theta}_r \end{bmatrix} \tag{97}$$

and, from 94-97:

$$\left[\vec{V}_{N_r/F_0}\right]_{F_M} = \begin{bmatrix} \cos\tilde{\theta} & \sin\tilde{\theta} \\ -\sin\tilde{\theta} & \cos\tilde{\theta} \end{bmatrix} \begin{bmatrix} v_r \\ d\dot{\theta}_r \end{bmatrix} \tag{98}$$

Identifying the point N_r with the point P of Appendix A, and applying relation 135, finally yield the following cart's equations:

$$\begin{bmatrix} \dot{x} \\ \dot{y} \end{bmatrix} = \begin{bmatrix} -1 & y \\ 0 & -(d+x) \end{bmatrix} \begin{bmatrix} v \\ \dot{\theta} \end{bmatrix} + \begin{bmatrix} \cos\tilde{\theta} & \sin\tilde{\theta} \\ -\sin\tilde{\theta} & \cos\tilde{\theta} \end{bmatrix} \begin{bmatrix} v_r \\ d\dot{\theta}_r \end{bmatrix} \tag{99}$$

By choosing the control vector as follows:

$$U = \begin{bmatrix} \tilde{v} \\ \dot{\tilde{\theta}} \end{bmatrix} = \begin{bmatrix} v - v_r \\ \dot{\theta} - \dot{\theta}_r \end{bmatrix} \tag{100}$$

relation 99 can also be written:

$$\dot{X} = A(X,t)X + B(X)U \tag{101}$$

with:

$$A(X,t) = \begin{bmatrix} 0 & \dot{\theta}_r(t) & h_1(\tilde{\theta},t) \\ -\dot{\theta}_r(t) & 0 & h_2(\tilde{\theta},t) \\ 0 & 0 & 0 \end{bmatrix} \tag{102}$$

$$B(X) = \begin{bmatrix} -1 & y \\ 0 & -(d+x) \\ 0 & 1 \end{bmatrix} \tag{103}$$

$$h_1(\tilde{\theta},t) = v_r(t)\frac{\cos\tilde{\theta}-1}{\tilde{\theta}} + d\dot{\theta}_r(t)\frac{\sin\tilde{\theta}}{\tilde{\theta}} \tag{104}$$

$$h_2(\tilde{\theta},t) = d\dot{\theta}_r(t)\frac{\cos\tilde{\theta}-1}{\tilde{\theta}} - v_r(t)\frac{\sin\tilde{\theta}}{\tilde{\theta}} \tag{105}$$

We notice that the functions h_1 and h_2 are defined everywhere (even at $\tilde{\theta} = 0$) and that the "state" matrix $A(X,t)$ is null when the reference cart is motionless (i.e. when $\dot{\theta}_r = v_r = 0$). We then fall back on equations 37- 39 which were used to study the problem of regulation around a terminal configuration. The reference cart tracking problem thus differs from the initial regulation problem by the fact that the system's state matrix is no longer null. We will see that this difference induces new feedback stabilization properties.

5.2.2 Control

a) Control design based on the p.l. system:

We first examine the controllability properties of the p.l. system associated with the cart's equation 101 around the ideal configuration ($X = 0,\ U = 0$).

The equation of the p.l. system is:

$$\dot{X} = A(0,t)X + B(0)U \tag{106}$$

with:

$$A(0,t) = \begin{bmatrix} 0 & \dot{\theta}_r(t) & d\dot{\theta}_r(t) \\ -\dot{\theta}_r(t) & 0 & -v_r(t) \\ 0 & 0 & 0 \end{bmatrix} \tag{107}$$

and:

$$B(0) = \begin{bmatrix} -1 & 0 \\ 0 & -d \\ 0 & 1 \end{bmatrix} \tag{108}$$

Let us consider, to simplify, the case where $\dot{\theta}_r$ and v_r are constant. We then obtain a linear invariant system with the controllability matrix:

$$\begin{aligned} C &= [B(0)|A(0)B(0)|A^2(0)B(0)] \\ &= \begin{bmatrix} -1 & 0 & 0 & -d\dot{\theta}_r & \dot{\theta}_r^2 & -\dot{\theta}_r v_r \\ 0 & -d & \dot{\theta}_r & -v_r & 0 & d\dot{\theta}_r^2 \\ 0 & 1 & 0 & 0 & 0 & 0 \end{bmatrix} \end{aligned} \tag{109}$$

We easily verify that this is a full rank matrix if and only if $\dot{\theta}_r$ and v_r are not both equal to zero.

We thus find again, as pointed out in section 3.5, that the p.l. system is not controllable when the reference cart is motionless ($v_r = \dot{\theta}_r = 0$). However, the important new fact is that this system becomes controllable as soon as the reference cart starts moving. Then the state matrix A is not null. It is also worth noticing that this is true whatever the value of d, i.e whatever the choice of the controlled point N on the cart.

Let us assume that either v_r or $\dot{\theta}_r$ is different from zero. Since the p.l. system is controllable in this case, we know that any linear control:

$$U = KX \tag{110}$$

with a gain matrix K chosen so that the closed-loop system's state matrix $A(0) + B(0)K$ is "stable" (eigenvalues in the left half complex plane), stabilizes the nonlinear system 101 locally.

Any classical technique of linear systems' control theory may then be applied to calculate the matrix K: pole placement, quadratic criterion minimization, etc.

The simulation of a control of this type, obtained by taking $v_r = constant$, $\dot{\theta}_r = 0$ and minimizing the following quadratic cost:

$$J = \int_0^{+\infty} (X^T X + U^T U) dt \tag{111}$$

is represented in **Fig.6**. In this particular case, and when $d = 0$, the optimal control expression is (proof in Appendix B):

$$\begin{cases} \tilde{v} = x \\ \dot{\tilde{\theta}} = sign(v_r) y - \sqrt{1 + 2|v_r|}\tilde{\theta} \end{cases} \tag{112}$$

with $sign(v_r) = 1$ if $v_r > 0$, and $sign(v_r) = -1$ if $v_r < 0$.

Notice that this control is not defined when $v_r = 0$. **Fig.6** shows the convergence of the controlled cart towards the reference cart when the configurations of the two carts do not coincide initially.

The derivation of a linear control such as 110 however calls for a few remarks and questions:

i) Whatever the technique used for the calculation of the gain K (pole placement,quadratic cost minimization,...), the components of this matrix depend on the values taken by v_r and $\dot{\theta}_r$. Therefore, this matrix must be reevaluated each time that these variables are changed.

ii) The (local) stability property of the controlled system is established under the assumption that v_r and $\dot{\theta}_r$ are constant. What does happen when these variables vary quickly on a large scale, for example during acceleration phases?

iii) What is the size of the stability domain? Does the state X converge to zero whatever the initial conditions?

It does not seem so easy to answer these questions via sole analysis, and a simulation study would certainly help clarifying these issues. Nevertheless, their importance is made somewhat less crucial by the fact that we can derive, as we will show in the next section, **globally stabilizing nonlinear controls.**

b) A set of nonlinear controls:

According to 101-103, the first two cart's equations may also be written:

$$\begin{cases} \dot{x} = -\tilde{v} + y(\dot{\tilde{\theta}} + \dot{\theta}_r) + h_1(\tilde{\theta}, t)\tilde{\theta} \\ \dot{y} = -d\dot{\tilde{\theta}} - x(\dot{\tilde{\theta}} + \dot{\theta}_r) + h_2(\tilde{\theta}, t)\tilde{\theta} \end{cases} \tag{113}$$

We define the following set of nonlinear controls:

$$\begin{cases} \dot{\tilde{\theta}} = h_\theta(X,t) = -\frac{k_3}{k_2}\tilde{\theta} - \frac{k_1}{k_2}h_2(y + d\tilde{\theta}) + \frac{k_6}{k_2}x \\ \tilde{v} = k_3k_5x + (2k_3k_4 + h_1 + k_6)\tilde{\theta} + [(1 - k_1)y - k_1d\tilde{\theta}](h_\theta(X,t) + \dot{\theta}_r) \end{cases} \tag{114}$$

where:

- k_1 and k_2 are positive real numbers;
- k_3, k_4, k_5 are positive scalar gains that will be assumed constant to simplify, although this is not a necessary condition. The only required condition is:

$$0 \leq {k_4}^2 < k_5 \tag{115}$$

- k_6 is any real scalar gain.

In order to analyze the stabilizing properties of this set of controls, we consider the following Lyapunov function:

$$V(X) = \frac{1}{2}\{x^2 + k_1(y + d\tilde{\theta})^2 + k_2\tilde{\theta}^2\} \tag{116}$$

Using 113 in the derivation of this function gives:

$$\dot{V}(X) = x[-\tilde{v} + (1-k_1)y(\dot{\tilde{\theta}} + \dot{\theta}_r) - k_1 d\tilde{\theta}(\dot{\tilde{\theta}} + \dot{\theta}_r)] + \tilde{\theta}[k_1 h_2(y + d\tilde{\theta}) + k_2\dot{\tilde{\theta}}] \quad (117)$$

and, substituting the control variables $\dot{\tilde{\theta}}$ and $\tilde{v}$ by their expressions 114 we obtain:

$$\dot{V}(X) = -k_3[\tilde{\theta}^2 + 2k_4\tilde{\theta}x + k_5 x^2] \quad (118)$$

The conditions imposed upon the gains k_3, k_4 and k_5 then yield:

$$\dot{V}(X) \leq 0 \quad (119)$$

and:

$$\dot{V}(X) = 0 \quad \Leftrightarrow \quad \begin{cases} x = 0 \\ \tilde{\theta} = 0 \end{cases} \quad (120)$$

It already comes from what precedes (assuming the existence and unicity of the solutions of our system) that whatever the initial condition $X(0)$ and whatever d, $\dot{\theta}_r(t)$, $v_r(t)$:

- the positive function $V(X)$ decreases and converges to some positive (or null) value;
- $\lim_{t\to+\infty} x(t) = 0$;
- $\lim_{t\to+\infty} \tilde{\theta}(t) = 0$.

It remains to be seen whether the coordinate $y(t)$ also converges to zero or not. We will distinguish two cases.

case 1: the reference cart's velocities v_r and $\dot{\theta}_r$ are constant.

In this case, the equation of the controlled system does not depend on the independent variable t (homogeneous system) and we may try to apply Lasalle's theorem so as to reach a conclusion. We must then determine the largest set left invariant by the controlled system equation and contained in the set defined by $\dot{V}(X) = 0$. From 120, the solutions contained in the set defined by $\dot{V}(X) = 0$ are obtained by setting $x = 0$ and $\tilde{\theta} = 0$ in equations 113 and 114. We find in this way that the coordinate y must satisfy the conditions:

$$\begin{cases} \dot{y} = 0 \\ y\dot{\theta}_r = 0 \\ yv_r = 0 \end{cases} \quad (121)$$

Two possibilities:

- $\dot{\theta}_r = v_r = 0$ (the reference cart is motionless)

  Then it is not possible to draw a conclusion regarding the limit value of $y(t)$. This is of course compatible with the fact, already established, that there is no feedback control able to ensure simultaneous convergence of x, y and $\tilde{\theta}$ to zero in this case.

- $\dot{\theta}_r \neq 0$ or $v_r \neq 0$

  In this case the largest invariant set contained in the set defined by $\dot{V}(X) = 0$ reduces to the point $X = 0$ and, according to Lasalle's theorem, $y(t)$ also tends to zero.

We have thus shown that **any control 114 ensures the convergence of the cart towards the reference cart whenever the reference velocities $\dot{\theta}_r$ and v_r are constant and not both equal to zero.**

case 2 (more general): $\dot{\theta}_r(t)$ and $v_r(t)$ are not necessarily constant.

In this case we cannot apply Lasalle's theorem because the controlled system's equation is no longer homogeneous (it depends on the variable t) and other methods must be used.

In order to point out the fact that the invariance of $\dot{\theta}_r$ and v_r is not necessary to the convergence of X to zero, we propose the following result, the proof of which is given in Appendix C:

Proposition (sufficient conditions for the convergence of X to zero):
If :

- *the functions $v_r(t)$ and $\dot{\theta}_r(t)$ are differentiable ($\forall t \geq 0$)*
- $|\dot{v}_r(t)| < K_v < +\infty \qquad (\forall t \geq 0)$
- $|\ddot{\theta}_r(t)| < K_\theta < +\infty \qquad (\forall t \geq 0)$
- *either $v_r(t)$ or $\dot{\theta}_r(t)$ does not converge to zero*

then:
$\lim_{t \to +\infty} X(t) = 0$

Notice that the conditions upon $v_r(t)$ and $\dot{\theta}_r(t)$ in this proposition are only sufficient to the convergence of X to zero. Weaker (or different) conditions may thus be obtained.

For practical purposes, the important fact pointed out by this proposition is the **convergence of the controlled cart towards the reference cart whenever the latter keeps moving.** This property finds applications not only in the trajectory tracking problem as such, but also in the initial problem of regulation around

a given terminal configuration. Indeed, it suggests a certain number of strategies for the choice of the reference cart's trajectory in order to solve this problem in practice. For example, one can imagine having the reference cart perform a periodic translational motion centered on the configuration to be reached and maintain this motion until the configuration error becomes smaller than a certain threshold determined in advance. This possibility is illustrated by the simulation represented in **Fig.7** where the controlled cart gives the impression that it performs a parking manoeuvre. Notice that this manoeuvre does not rely on an elaborate planification of the reference cart's trajectory. The comparison with **Fig.5** shows the difference between a control in both position and orientation and a control in position only: the cart no longer makes a half turn each time that the reference cart's translational velocity changes its sign.

The control 114 used in this simulation was obtained by making the following choices:

$$\begin{cases} d = 0 \\ k_1 = 1, \ k_4 = 0, \ k_6 = 0 \end{cases} \tag{122}$$

By setting:

$$g_1 = k_3 k_5 \ , \quad g_3 = k_3/k_2 \ , \quad g_2 = 1/k_2 \tag{123}$$

one easily verifies that this control may also be written:

$$\begin{cases} v = v_r \cos\tilde{\theta} + g_1 x & ; \ g_1 > 0 \\ \dot{\theta} = \dot{\theta}_r - g_3\tilde{\theta} + g_2 v_r \frac{\sin\tilde{\theta}}{\tilde{\theta}} y & ; \ g_2 > 0 \ , \ g_3 > 0 \end{cases} \tag{124}$$

A linear approximation of this control, when the error $\tilde{\theta}$ is small, is:

$$\begin{cases} \tilde{v} = g_1 x \\ \dot{\tilde{\theta}} = g_2 v_r y - g_3 \tilde{\theta} \end{cases} \tag{125}$$

and it can be shown that this control is exponentially stabilizing for the p.l. system when v_r and $\dot{\theta}_r$ are constant and not both equal to zero (proof in Appendix D).

In **Fig.8**, where the nonlinear control 124 is again simulated with $v_r = constant$ and $\dot{\theta}_r = 0$ in this case, the gains g_1-g_3 were chosen so as to have the linearized version 125 coincide with the optimal control 112 determined previously. In this way, the comparison of **Fig.8** and **Fig.6** shows how the convergence towards the reference cart is modified by using the nonlinear control 124 instead of its linearized version 125, when the initial orientation error is not small.

It may also be noticed that the gain $g_2 v_r$ of the feedback part in y of the nonlinear control 124 tends to zero when v_r tends to zero, while the corresponding gain in the linear optimal control 112 is constant, depends on the sign of v_r and is not defined

when $v_r = 0$. The controls 124 and 125 are thus always defined, while the optimal control 112 is not defined when the reference cart is motionless ($v_r = \dot{\theta}_r = 0$), i.e. when the p.l. system is not controllable. This indicates also that the set of nonlinear controls 114 does not cover all stabilizing feedback controls, and that other nonlinear controls with similar properties may probably be derived.

6 Summary and conclusions

In this study, a few feedback control principles for nonholonomic mobile robots were pointed out and applied to the two-wheel driven cart.

We saw that despite the weak controllability (or accessibility) of the cart, there was no differentiable pure state-feedback able to stabilize the cart in both position and orientation around a given terminal configuration. However, it is possible to stabilize two of the configuration variables ((x, y) or $(x, \tilde{\theta})$).

When the controlling of a cart's point position (control of x and y) is the objective, it is preferable to choose this point away from the wheels' axis in order to ensure acceptable convergence properties.

The extension of the initial regulation problem to the trajectory tracking problem in Cartesian space allowed us to show that, via the introduction of a "virtual" reference cart the trajectory of which is determined at a higher control level, feedback stabilization in both position and orientation becomes possible as long as the reference cart keeps moving. This fact does not contradict the aforementionned non-existence result because the control laws considered in the trajectory tracking case now depend also on the external variable t which is used to parametrize the reference cart's motion. An intuitive interpretation of this fact is also possible after realizing that the physics of the problem are not the same when the reference cart is motionless and when it is moving.

Although subtle in appearance, the distinction between the two cases is conceptually important because it concretely meddles with the difficult and only partially understood problem of linking the controllability property of nonlinear systems (which is closely related to the path planning problem, and thus to open-loop control) to the various feedback control possibilities. In the context of mobile robots, it points out some peculiarities of the problem of controlling nonholonomic systems, such as the possibility of controlling (and stabilizing) configuration variables in a number exceeding the number of the robot's actuators. A consequence of this possibility, which does not exist in the case of holonomic robot manipulators (for which the notions of controllability and feedback stabilization are undistinguishable in the configuration space), is that the control approaches developped for robot manipulators apply only partially to the case of mobile robots. Complementary studies are necessary to fully explore this possibility. In particular, it is no longer so easy to decouple the path planning problem from the feedback control problem, as already illustrated in

this study. The mere choice of the control strategy to follow is not easily decided because there are many possible alternatives. For example, what is the best choice for transfering the cart from an initial configuration to another configuration? Is it better to regulate the position of a cart's point (not located on the wheels' axis) around a reference trajectory of this point, without concern for the orientation, or to regulate both position and orientation around a reference cart's trajectory the calculation of which necessitates taking the nonholonomic constraints into account? Or should we also consider the possibility of switching between these two strategies when unmodeled difficulties occur (slippage, skidding,...)? It seems unlikely to bring and justify via sole analysis systematic and general answers to these questions.

Besides these questions, that we will leave to the sagacity of the interested reader, much remains to be done in complementation of the results presented in this report. Let us mention:

- A study of the proposed controls' robustness with respect to modeling errors (slippage, skidding,...) and external perturbations. Indeed, an expected feature of feedback control is to allow the system to "recover" from local deviations with respect to the ideal behaviour without making replannification of the objectives necessary.

- The extension of the studied velocity control laws to force control laws for which the control variables are no longer the angular wheels' velocities but the torques produced by the actuators. This implies, as in the case of robot manipulators, taking the dynamics of the mechanical system into account. Besides a more accurate modeling of the robot's motion, this passage from kinematics to dynamics is necessary to account for phenomena of a mechanical nature that cannot be modeled by first order equations (for example, the action resulting from a transversal perturbating force in relation to skidding effects).

- The use of the information issued by exteroceptive sensors (ultrasonic, infrared sensors, cameras,...) in feedback control loops to perform reflex tasks (local obstacle avoidance, target tracking,...).

- The complementary treatment of available measurement systems (odometry and others) depending on their characteristics (precision, sampling frequency,...). This also involves studying how several redundant measurement devices can be best exploited by the control. In this manner we meet sensory fusion issues at the lowest control level.

- The study of other robotic systems (car-like robots, trailers, caterpillar wheels,...), knowing that there is little genericity in mobile robotics.

These issues will be the subject of future research studies and reports.

A Cart's equations

Let P be any point in the plane $(\vec{i_0}, \vec{j_0})$ with coordinates x_p, y_p in the fixed frame F_0:

$$\vec{OP} = x_p \vec{i_0} + y_p \vec{j_0} \tag{126}$$

Let us set:

$$\vec{NP} = x\vec{i_M} + y\vec{j_M} \tag{127}$$

and let $\vec{V}_{P/F_M}$ be the point P velocity vector in the frame F_M.
We have:

$$\vec{V}_{P/F_M} = \dot{x}\vec{i_M} + \dot{y}\vec{j_M} \tag{128}$$

and also the classical kinematic relation:

$$\vec{V}_{P/F_M} = \vec{V}_{P/F_0} - \vec{V}_{M/F_0} - \vec{\omega}_{F_M/F_0} \wedge \vec{MP} \tag{129}$$

where $\vec{\omega}_{F_M/F_0}$ is the instantaneous rotational speed of the frame F_M with respect to the fixed frame F_0.
We also have:

$$\vec{\omega}_{F_M/F_0} = \dot{\theta}\vec{k_0} \tag{130}$$

and:

$$\begin{aligned} \vec{MP} &= \vec{MN} + \vec{NP} \\ &= (d+x)\vec{i_M} + y\vec{j_M} \end{aligned} \tag{131}$$

Thus:

$$\vec{\omega}_{F_M/F_0} \wedge \vec{MP} = y\dot{\theta}\vec{i_M} - (d+x)\dot{\theta}\vec{j_M} \tag{132}$$

Furthermore:

$$\vec{V}_{M/F_0} = v\vec{i_M} \tag{133}$$

where v is the cart's translational velocity, and:

$$\begin{aligned} \vec{V}_{P/F_M} &= \dot{x}_p\vec{i_0} + \dot{y}_p\vec{j_0} \\ &= (\cos\theta\ \dot{x}_p + \sin\theta\ \dot{y}_p)\vec{i_M} + (\cos\theta\ \dot{y}_p - \sin\theta\ \dot{x}_p)\vec{j_M} \end{aligned} \tag{134}$$

By identifying 128 and 129 and using 132-134, we obtain:

$$\begin{bmatrix} \dot{x} \\ \dot{y} \end{bmatrix} = \begin{bmatrix} -1 & y \\ 0 & -(d+x) \end{bmatrix} \begin{bmatrix} v \\ \dot{\theta} \end{bmatrix} + \begin{bmatrix} \cos\theta & \sin\theta \\ -\sin\theta & \cos\theta \end{bmatrix} \begin{bmatrix} \dot{x}_p \\ \dot{y}_p \end{bmatrix} \tag{135}$$

The equations three and four of the system 14 proceed from relation 135 by setting the point P at the origin O of the fixed frame F_0 ($\Rightarrow\ \dot{x}_p = \dot{y}_p = 0$).

B Calculation of the optimal control associated with the p.l. system

in the case where $d = 0$, $\dot{\theta}_r = 0$ and $v_r \neq 0$.

It is known that the linear control which minimizes the cost:

$$J = \int_0^{+\infty} (X^T Q X + U^T R U) dt \quad ; \quad P \geq 0 \ , \quad R > 0 \tag{136}$$

for the system:

$$\dot{X} = AX + BU \tag{137}$$

is:

$$U = KX \tag{138}$$

where:

$$K = -R^{-1} B^T P \tag{139}$$

and P is the positive solution to the following Algebraic Riccati Equation (A.R.E.):

$$PA + A^T P - PBR^{-1} B^T P + Q = 0 \tag{140}$$

In the present case we have:

$$\begin{aligned} R = Q = I_d \\ A = \begin{bmatrix} 0 & 0 & 0 \\ 0 & 0 & -v_r \\ 0 & 0 & 0 \end{bmatrix} \quad , \quad B = \begin{bmatrix} -1 & 0 \\ 0 & 0 \\ 0 & 1 \end{bmatrix} \end{aligned} \tag{141}$$

and we verify that the positive solution to equation 140 is:

$$P = \begin{bmatrix} 1 & 0 & 0 \\ 0 & \sqrt{1+2|v_r|}/|v_r| & -sign(v_r) \\ 0 & -sign(v_r) & \sqrt{1+2|v_r|} \end{bmatrix} \tag{142}$$

Thus, from 139:

$$K = \begin{bmatrix} 1 & 0 & 0 \\ 0 & sign(v_r) & -\sqrt{1+2|v_r|} \end{bmatrix} \tag{143}$$

This is the gain matrix of control 112.

C Proof of the Proposition

The proof of the Proposition of section 5.2.2 involves two steps:

1. We show that $y(t)$ tends to some finite limit value y_{lim}.
2. We show that $y_{lim} = 0$.

Step 1:
It has already been established that the positive function:

$$V(X) = \frac{1}{2}\{x^2 + k_1(y + d\tilde{\theta})^2 + k_2\tilde{\theta}^2\} \tag{144}$$

is decreasing. Thus $V(X(t))$ tends to some value, positive or equal to zero.

On the other hand, since $x(t)$ and $\tilde{\theta}(t)$ were shown to converge to zero, $y(t)^2$ converges to some finite limit value. Thus $y(t)$ also converges to some finite value denoted as y_{lim} (notice that the existence and unicity of the solutions of the considered differential system follows from the uniform boundedness of x, y and $\tilde{\theta}$ with respect to the initial conditions).

Step 2:
Using the convergence of x and $\tilde{\theta}$ to zero in equations 113 and 114, we obtain:

$$\dot{\tilde{\theta}}(t) = v_r(t)\frac{k_1}{k_2}y_{lim} + \eta_\theta(t) \tag{145}$$

with:

$$\lim_{t\to+\infty} \eta_\theta(t) = 0 \tag{146}$$

and:

$$\dot{x}(t) = k_1 y_{lim}(\dot{\tilde{\theta}}(t) + \dot{\theta}_r(t)) + \eta_x(t) \tag{147}$$

with:

$$\lim_{t\to+\infty} \eta_x(t) = 0 \tag{148}$$

To finish the proof, let us distinguish two possible cases.

case 1: $v_r(t)$ does not converge to zero.
Then there exists a positive real number α such that:

$$\forall t_0 \ , \ \ \exists t_1 > t_0 \ ; \ \ |v_r(t_1)| > \alpha \tag{149}$$

and, because $|\dot{v}_r(t)|$ is bounded (by assumption), there exists another positive real number h such that:

$$|v_r(s)| > \alpha/2 \quad if \quad s \in [t_1, t_1 + h] \tag{150}$$

Integration of 145 on the interval $[t_1, t_1 + h]$ gives:

$$\tilde{\theta}(t_1 + h) - \tilde{\theta}(t_1) = \frac{k_1}{k_2} y_{lim} \int_{t_1}^{t_1+h} v_r(s)ds + \int_{t_1}^{t_1+h} \eta_\theta(s)ds \tag{151}$$

Thus, by using 150:

$$|\tilde{\theta}(t_1 + h) - \tilde{\theta}(t_1)| > \frac{k_1}{2k_2} |y_{lim}| \alpha h - \int_{t_1}^{t_1+h} |\eta_\theta(s)|ds \tag{152}$$

The convergence of $\eta_\theta(t)$ to zero also yields the existence of t_2 such that:

$$|\eta_\theta(s)| < \frac{k_1}{4k_2} |y_{lim}| \alpha \quad if \quad s > t_2 \tag{153}$$

By using 153 in 152, it comes from what precedes:

$$\forall t_0 (> t_2) \ , \quad \exists t_1 > t_0 \ ; \quad |\tilde{\theta}(t_1 + h) - \tilde{\theta}(t_1)| > \frac{k_1}{4k_2} |y_{lim}| \alpha h \tag{154}$$

Since this last proposition contradicts the convergence of $\tilde{\theta}(t)$ to zero when $y_{lim} \neq 0$, we must have $y_{lim} = 0$.

case 2: $\lim_{t \to +\infty} v_r(t) = 0$ and $\dot{\theta}_r(t)$ does not converge to zero.

In this case, it comes from 145 and 146 that $\dot{\tilde{\theta}}(t)$ converges to zero, and from 147 and 148:

$$\dot{x} = k_1 y_{lim} \dot{\theta}_r(t) + \eta'_x(t) \tag{155}$$

with:

$$\lim_{t \to +\infty} \eta'_x(t) = 0 \tag{156}$$

From there, by proceeding in the same way as in case 1, we show that the convergence of x to zero necessarily yields $y_{lim} = 0$.

D Stability of the p.l. system

(under the control 120).

The control 120 may also be written:

$$U = KX \tag{157}$$

with:

$$K = \begin{bmatrix} g_1 & 0 & 0 \\ 0 & g_2 v_r & -g_3 \end{bmatrix} \quad ; \quad g_1, g_2, g_3 > 0 \tag{158}$$

The controlled p.l. system's equation is thus:

$$\dot{X} = FX \tag{159}$$

with:

$$\begin{aligned} F &= A(0) + B(0)K \\ &= \begin{bmatrix} -g_1 & \dot{\theta}_r & 0 \\ -\dot{\theta}_r & 0 & -v_r \\ 0 & g_2 v_r & -g_3 \end{bmatrix} \end{aligned} \tag{160}$$

The associated characteristic polynomial is:

$$\begin{aligned} \mathcal{P}(\lambda) &= det(\lambda I_d - F) \\ &= \lambda^3 + a_2\lambda^2 + a_1\lambda + a_0 \end{aligned} \tag{161}$$

with:

$$\begin{aligned} a_0 &= g_1 g_2 {v_r}^2 + g_3 \dot{\theta}_r^2 \\ a_1 &= g_2 {v_r}^2 + g_1 g_3 + \dot{\theta}_r^2 \\ a_2 &= g_1 + g_3 \end{aligned} \tag{162}$$

According to the Routh-Hurwitz's criterion, the roots of this polynomial are in the left half complex plane (stability condition) if and only if the coefficients a_i $(0 \leq i \leq 2)$ are positive and $a_1 a_2 > a_0$. The satisfaction of these conditions is readily verified here.

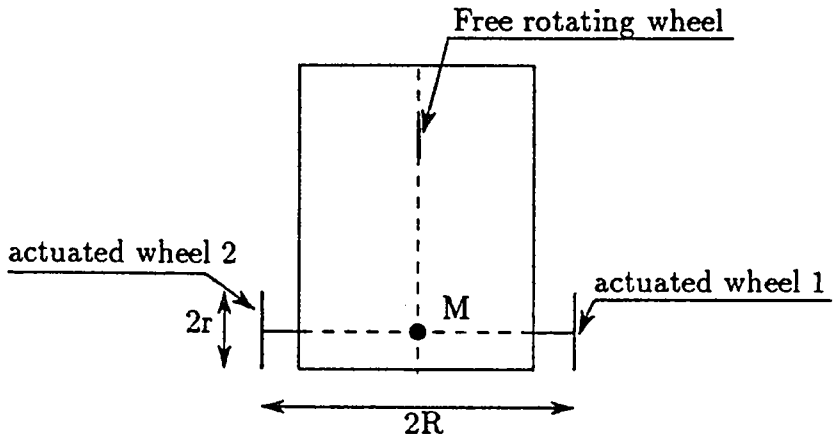

Fig.1 : Above view of the cart

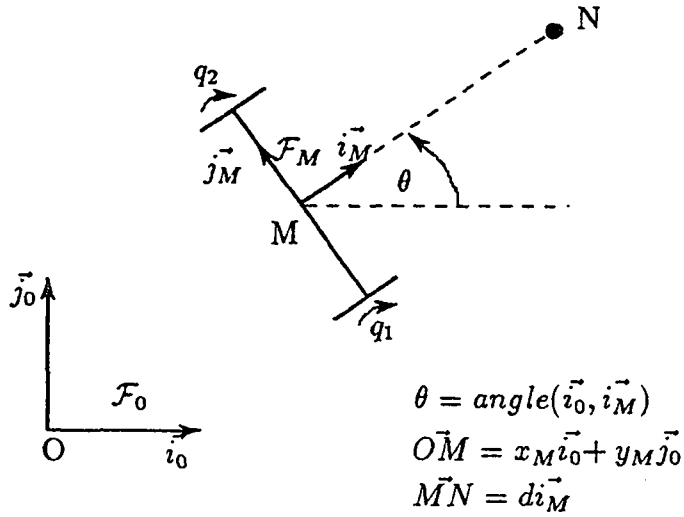

Fig.2 : Cart's parameters

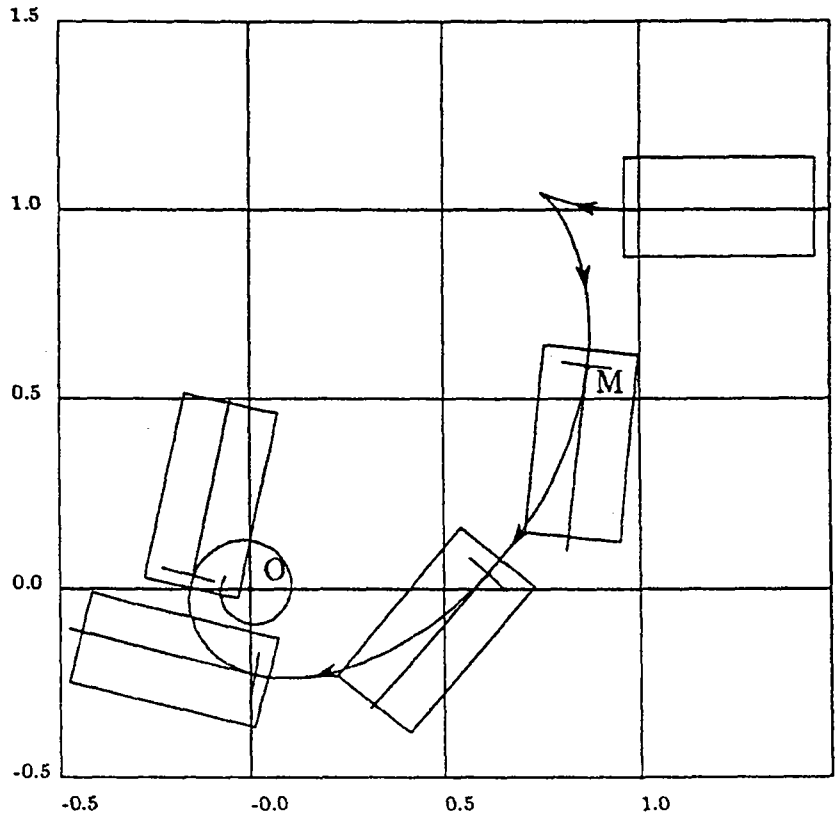

Fig.3 : Control of the point M on the wheels'axis (d=0)

Regulation case

Control 46

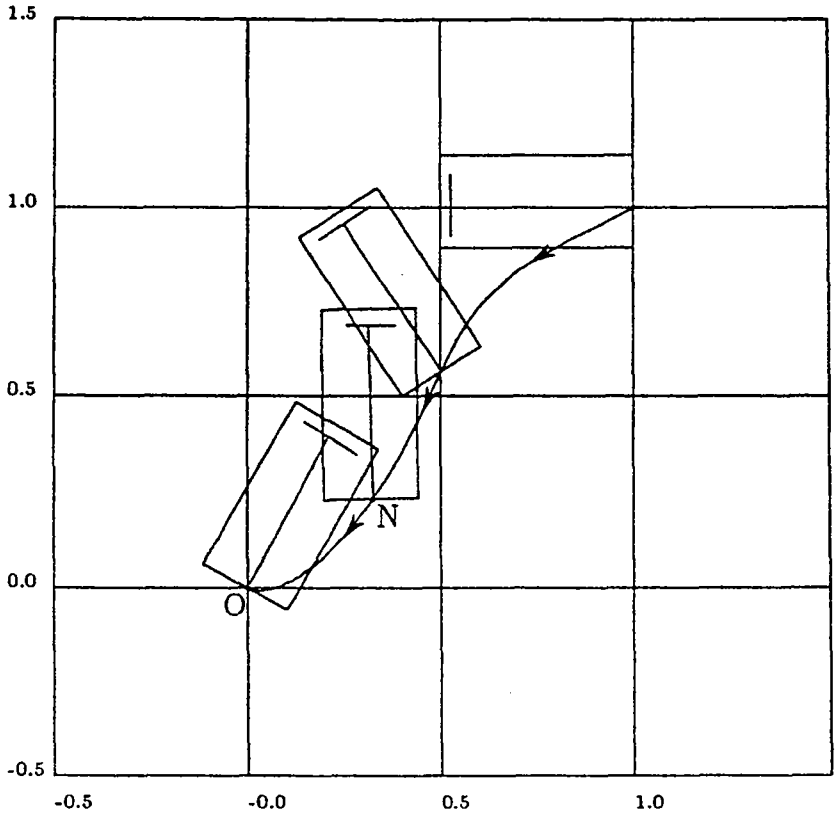

Fig.4 : Control of the point N not located on the wheels' axis ($d \neq 0$)

Regulation case

Control 54

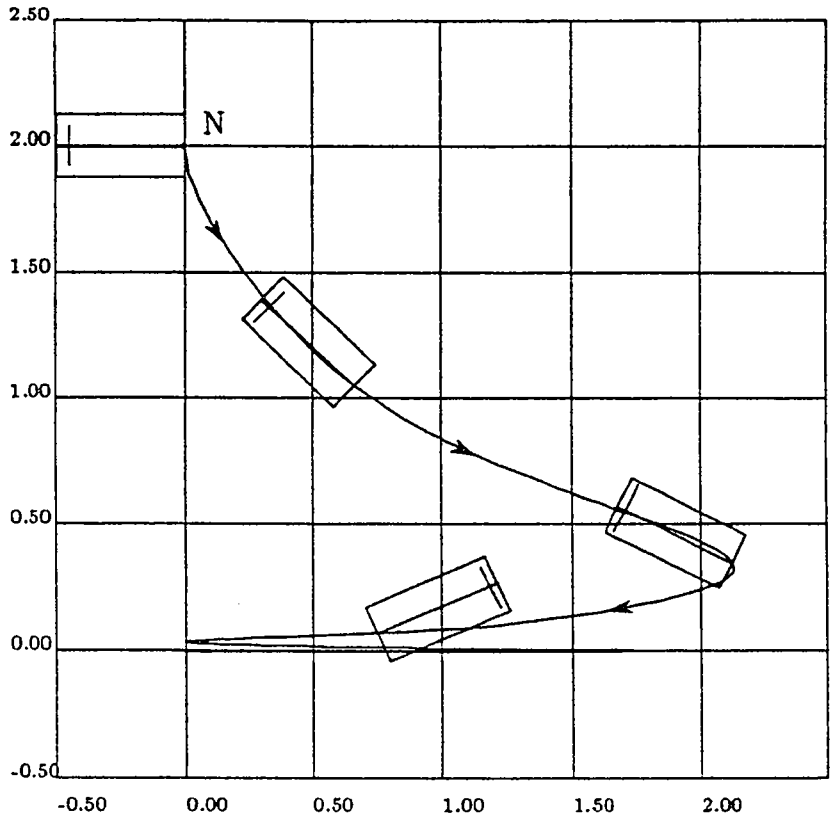

Fig.5 : Control of the point N ($d \neq 0$)

$v_p(t) = \sin t$ Trajectory tracking case

$\theta_c = 0$

Control 83

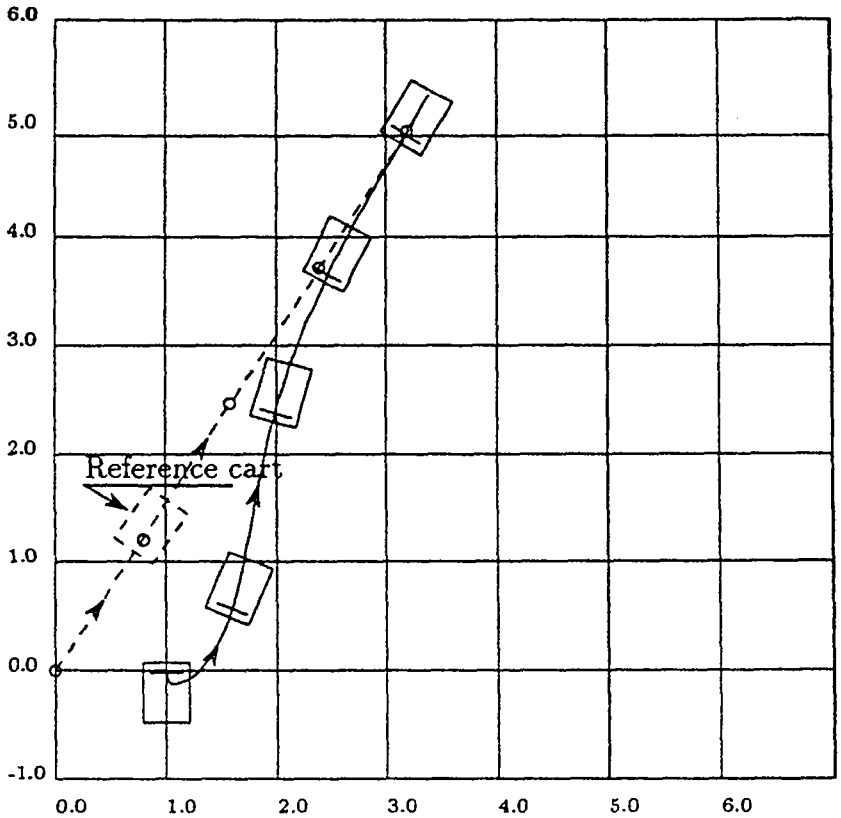

Fig.6 : Control in position and orientation

$d = 0$ Trajectory tracking
$v_r = 1$
$\dot{\theta}_r = 0$
Linear optimal control 112

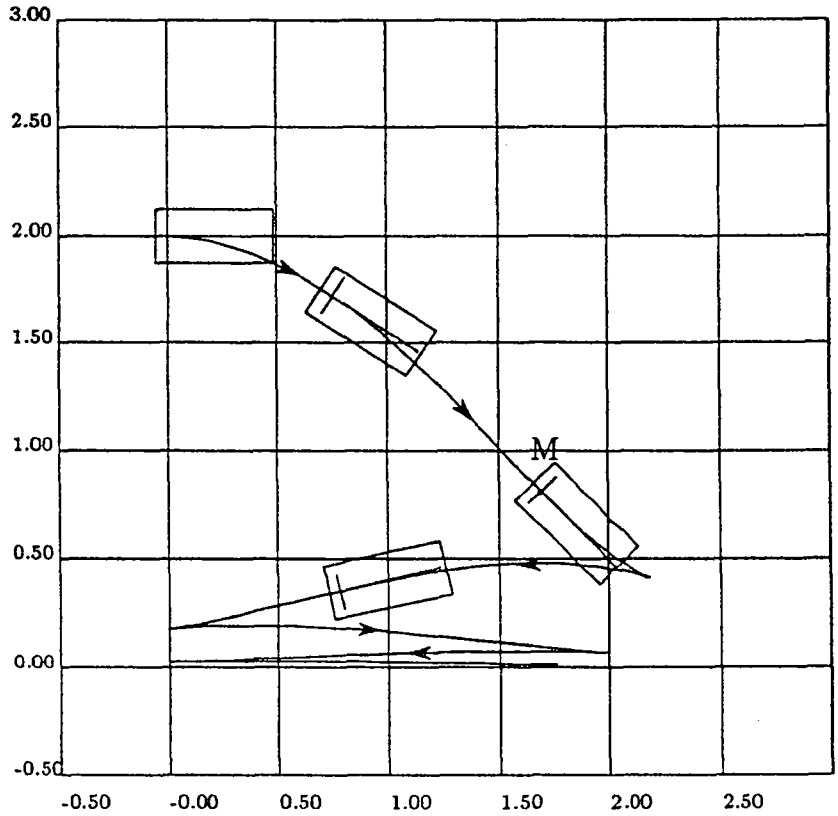

Fig.7 : Control in position and orientation

$d = 0$ Trajectory tracking case

$v_r(t) = \sin t$

$\theta_r = 0$

Nonlinear control 124

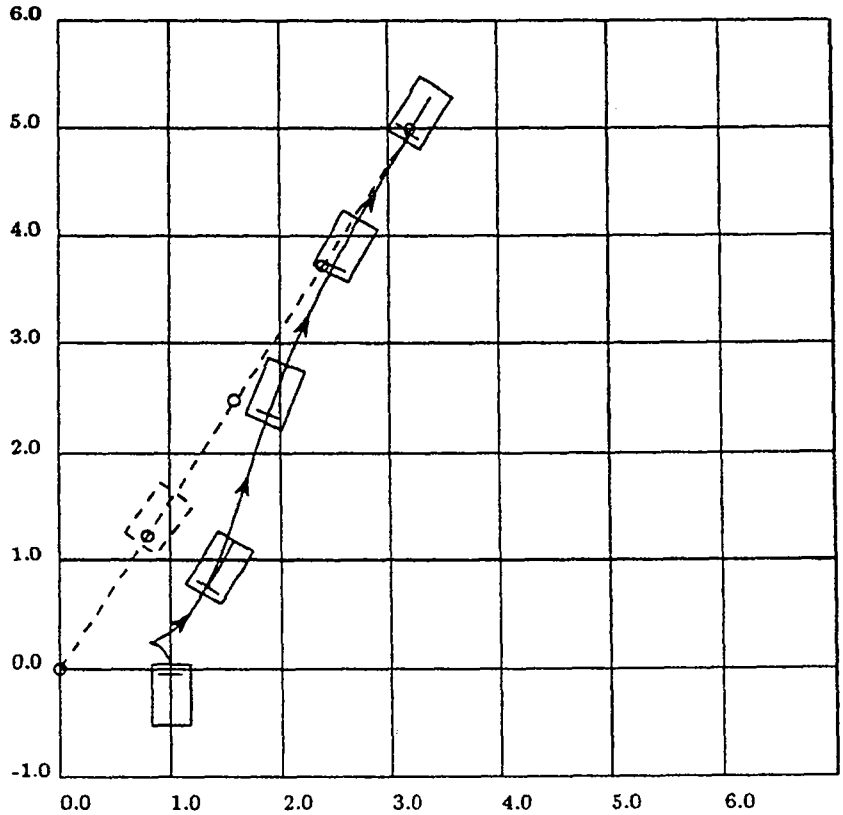

Fig.8 : Control in position and orientation

Trajectory tracking case

$d = 0$
$v_r = 1$
$\theta_r = 0$
Nonlinear control 124

References

[1] J.P. Laumond: **Feasible trajectories for Mobile Robots with Kinematic and Environment Constraints**, Int. Conf. on Intelligent Autonomous Systems, Amsterdam, pp. 346-354, 1986.

[2] J.P. Laumond: **Finding Collision-Free Smooth Trajectories for a Non-Holonomic Mobile Robot**, 10th Int. Joint Conf. on Artificial Intelligence, Milano, Italy, pp. 1120-1123, 1987.

[3] P. Tournassoud, O. Jehl: **Motion Planning for a Mobile Robot with a Kinematic Constraint**, IEEE Int. Conf. on Robotics and Automation, Philadelphia, Penn., pp. 1785-1790, 1988.

[4] J.F. Canny: **The Complexity of Robot Motion Planning**, MIT Press, 1988.

[5] Z. Li, J.F. Canny, G. Heinzinger: **Robot Motion Planning with Nonholonomic Constraints**, Memo UCB/ERL M89/13, Electronics Research University, University of California, Berkeley CA.

[6] J. Barraquand, J.C. Latombe: **On Nonholonomic Mobile Robots and Optimal Maneuvering**, Revue d'Intelligence Artificielle, vol. 3 - n.2/1989, Ed. Hermes, pp. 77-103, 1989.

[7] P.F. Muir, C.P. Neuman: **Kinematic Modeling for Feedback Control of an Omnidirectional Mobile Robot**, Proc. of the 1987 IEEE Int. Conf. on Robotics and Automation, Raleigh, N. Carolina, pp. 1772-1778, 1987.

[8] W.L. Nelson, I.J. Cox: **Local Path Control for an Autonomous Vehicle**, Proc. of the 1988 IEEE Int. Conf. on Robotics and Automation, Philadelphia, Penn., pp. 1504-1510, 1988.

[9] Y. Bamberger: **Mécanique de l'ingénieur I. Systèmes de corps rigides.**, Hermann, 1981.

[10] A. Isidori: **Nonlinear Control Systems: An Introduction**, Lecture Notes in Control and Information Sciences, 72, Springer-Verlag, 1985.

[11] W.L. Chow: **Uber systeme von linearen partiellen differentialgleichungen ester ordnung**, Math. Ann. 117, pp. 98-105, 1939.

[12] C. Lobry: **Controllabilité des systèmes non linéaires**, SIAM J. Contr. 8, pp. 573-605, 1979.

[13] R.W. Brockett: **Asymptotic Stability and Feedback Stabilization**, Differential Geometric Control Theory, Proc. of the conf. held at Michigan Technological University in June-July 1982, Progress in Math., vol.27, Birkhauser, pp. 181-208, 1983.

[14] A. Lasalle, S. Lefschetz: **Stability by Lyapunov's Direct Method**, Academic Press, 1961.

Imprimé en France
par
. l'Institut National de Recherche en Informatique et en Automatique .

ISSN 0249-6399