HAL
open science

The Average case analysis of algorithms : complex asymptotics and generating functions

Philippe Flajolet, Robert Sedgewick

To cite this version:

Philippe Flajolet, Robert Sedgewick. The Average case analysis of algorithms : complex asymptotics and generating functions. [Research Report] RR-2026, INRIA. 1993. inria-00074645

HAL Id: inria-00074645

https://inria.hal.science/inria-00074645v1

Submitted on 24 May 2006

HAL is a multi-disciplinary open access archive for the deposit and dissemination of scientific research documents, whether they are published or not. The documents may come from teaching and research institutions in France or abroad, or from public or private research centers.

L'archive ouverte pluridisciplinaire **HAL**, est destinée au dépôt et à la diffusion de documents scientifiques de niveau recherche, publiés ou non, émanant des établissements d'enseignement et de recherche français ou étrangers, des laboratoires publics ou privés.

INRIA

INSTITUT NATIONAL DE RECHERCHE EN INFORMATIQUE ET EN AUTOMATIQUE

The Average case analysis of algorithms : complex asymptotics and generating functions

Philippe Flajolet - Robert Sedgewick

N° 2026
Septembre 1993

PROGRAMME 2

Rapport de recherche

Les rapports de recherche de l'INRIA
sont disponibles en format postscript sous
ftp.inria.fr (192.93.2.54)

si vous n'avez pas d'accès ftp
la forme papier peut être commandée par mail :
e-mail : dif.gesdif@inria.fr
(n'oubliez pas de mentionner votre adresse postale).

par courrier :
Centre de Diffusion
INRIA
BP 105 - 78153 Le Chesnay Cedex (FRANCE)

INRIA research reports
are available in postscript format
ftp.inria.fr (192.93.2.54)

if you haven't access by ftp
we recommend ordering them by e-mail :
e-mail : dif.gesdif@inria.fr
(don't forget to mention your postal address).

by mail :
Centre de Diffusion
INRIA
BP 105 - 78153 Le Chesnay Cedex (FRANCE)

THE AVERAGE CASE ANALYSIS OF ALGORITHMS:
Complex Asymptotics and Generating Functions

PHILIPPE FLAJOLET[1] & ROBERT SEDGEWICK[2]

Abstract. *This report is part of a projected series whose aim is to present in a synthetic way the major methods and models in the average-case analysis of algorithms. The present work* —Complex Asymptotics and Generating Functions— *is devoted to the use of complex analysis in order to estimate the asymptotic growth of coefficients of combinatorial generating functions. It consists of two chapters: (i). Complex Asymptotic Methods; (ii). Singularity Analysis of Generating Functions.*

L'ANALYSE EN MOYENNE D'ALGORITHMES:
Asymptotique complexe et fonctions génératrices

Résumé. Ce rapport fait partie d'un projet d'une série dont le but est de présenter de manière unifiée les principales méthodes et modèles de l'analyse d'algorithmes. Y est décrit l'utilisation de l'analyse complexe afin d'estimer la croissance asymptotique des coefficients de fonctions génératrices de l'analyse combinatoire. Le rapport se compose de deux chapitres: (i). Méthodes d'analyse complexe; (ii). Analyse de singularité des séries génératrices.

[1] Algorithms Project, INRIA Rocquencourt, F-78153 Le Chesnay (France)
[2] Department of Computer Science, Princeton University, Princeton, New-Jersey 08544 (USA)

Foreword

This report is part of a projected series whose aim is to present in a synthetic way the major methods and models in the average-case analysis of algorithms. The following items are to be treated in the series. First, there will be a collection of reports on *Methods*:

I. Counting and generating functions.

II. Complex asymptotics and generating functions.

III. Saddle point and Mellin transforms.

IV. Functional equations.

V. Multivariate asymptotics.

This series is to be later followed by a collection of reports on *Models*:

VI. Strings, languages, and grammars.

VII. Term trees and expression trees.

VIII. Permutations, searching, and sorting.

IX. Digital structures.

X. Mappings, occupancy, and hashing.

Part I consists of 3 chapters. It has been issued as

> P. FLAJOLET AND R. SEDGEWICK. "The Average Case Analysis of Algorithms: Counting and Generating Functions", INRIA Research Report 1888, 1993. 116 pages.

The present report (*II. Complex Asymptotics and Generating Functions*) is devoted to the use of complex analysis in order to estimate the asymptotic growth of coefficients of generating functions. It consists of two chapters (numbered consecutively after those of Part I):

4. Complex Asymptotic Methods;

5. Singularity Analysis of Generating Functions.

Work of Philippe Flajolet has been supported in part by the ESPRIT III Basic Research Action Programme of the E.C. under contract ALCOM II (#7141).

Chapter 4

Complex Asymptotic Methods

Analytic methods are extremely powerful and when they apply, they often yield estimates of unparalleled precision.

— ANDREW ODLYZKO [12]

Elementary techniques permit to estimate asymptotically counting results when they are already in the form of combinatorial sums. We examine here the asymptotic determination of coefficients of generating functions directly from an expression for the function itself, and without a need for explicit expansions.

The crucial observation is that most of the generating functions that occur in combinatorial enumerations are also *analytic functions*: their expansions converge in a neighbourhood of the origin and Cauchy's integral formula expresses coefficients of such analytic functions as contour integrals.

Suitable uses of Cauchy's integral formula make it possible to determine effective bounds for coefficients of such analytic generating functions. For the fairly common case of functions that have singularities at a finite distance, the *exponential growth* formula relates the *location* of the singularities closest to the origin to the exponential order of growth of coefficients.

Precise asymptotic information on the coefficients of analytic functions is then attainable by more refined arguments. The nature of the *singularities* of a function dictates the fine structure of the asymptotic of its coefficients, especially the *subexponential factors* involved. This is the major paradgim to be explored in this chapter and the next one.

In this chapter we start by recalling the elements of the theory of analytic functions and develop exponential bounds based on the location of singularities. We then work out precise asymptotic estimates for coefficients of either rational functions or of functions with polar singularities (meromorphic functions).

The next chapter extends the complex analytic approach to a wide class of functions. It is devoted to results of a general nature that allow to transfer asymptotic expansion of a function near a singularity to a matching asymptotic expansion of its coefficients.

The methods which we are going to see here and in subsequent chapters apply to almost any conceivable combinatorial generating function that has a closed form expression, even though the coefficients themselves need not have a tractable or explicit form. In a variety of cases, they can furthermore be applied to generating functions *implicitly* defined by *functional equations* provided that local expansions can be obtained and even though the functional equations themselves may admit of no closed form solution.

4.1 Introduction

Consider the two generating functions

$$D_1(z) = \frac{e^{-z}}{1-z} \quad \text{and} \quad D_2(z) = \frac{e^{-z-\frac{z^2}{2}}}{1-z},$$

that are exponential generating functions of derangements and generalized derangements respectively.

The asymptotic form of the coefficient $d_{1,n} = [z^n]d_1(z)$ can be determined directly using elementary real analysis. We have

$$d_{1,n} = 1 - \frac{1}{1!} + \frac{1}{2!} + \cdots + \frac{(-1)^n}{n!},$$

from which there results

$$d_{1,n} = e^{-1} + O(\frac{1}{(n+1)!})$$

by the alternating series test.

However, the corresponding problem for $D_2(z)$ involves a double alternating sum and the problem would get even more complicated if general $D_k(z)$ were to be considered.

In this chapter, we propose to examine methods that enable one to reason in a very synthetic way as follows:

The functions $D_1(z)$ and $D_2(z)$ are analytic at all points except $z = 1$ which is a singular point for both of them, where

$$D_1(z) \underset{z\to 1}{\sim} \frac{e^{-1}}{1-z} \quad \text{and} \quad D_2(z) \underset{z\to 1}{\sim} \frac{e^{-\frac{3}{2}}}{1-z}. \tag{4.1}$$

Therefore,

$$d_{1,n} \equiv [z^n]\frac{e^{-1}}{1-z} \underset{n\to\infty}{\sim} e^{-1} \quad \text{and} \quad d_{2,n} \equiv [z^n]\frac{e^{-\frac{3}{2}}}{1-z} \underset{n\to\infty}{\sim} e^{-\frac{3}{2}}. \tag{4.2}$$

A *singularity* of a function is a point where the function ceases to be complex-differentiable. Functions D_1 and D_2 become infinite at $z = 1$ and in particular are singular there. Suitable analytic properties make it possible to transfer singular expansions like (4.1) into corresponding expansions for coefficients like (4.2).

Various theorems provide sufficient conditions under which the following central implication is valid:

$$f(z) \sim \sigma(z) \quad \Longrightarrow \quad [z^n]f(z) \sim [z^n]\sigma(z), \tag{4.3}$$

where $f(z)$ is the function whose Taylor coefficients are to be estimated and $\sigma(z)$ is its approximation near a singularity, usually a much simpler function whose coefficients are easier to find. Under such general conditions, from (4.3), it suffices to estimate a function locally in order to derive its coefficients asymptotically. In other words, the relation (4.3) provides a mapping between asymptotic scales of functions near singularities and asymptotics scales of coefficients.

We are going to make this programme precise starting with the case of rational functions and functions with polar singularities (meromorphic functions), of which $D_1(z)$ and $D_2(z)$ are representative cases. Apart from being of direct interest for combinatorial applications, the analysis of polar singularities also constitutes a preamble to the more refined complex asymptotic methods to be described in the next chapter that apply to a wider range of singular behaviours.

EXERCISE 1. Use a direct Taylor expansion and standard real analysis in order to prove the limit result (4.2).

More generally use elementary methods to prove that if $f(z)$ has radius of convergence > 1, and $f(1) \neq 0$, then

$$[z^n]\frac{f(z)}{1-z} \sim f(1) \qquad \text{as } n \to +\infty.$$

Under the same conditions,

$$[z^n]\frac{f(z)}{\sqrt{1-z}} \sim \frac{f(1)}{\sqrt{\pi n}} \qquad \text{and} \qquad [z^n]f(z)\log\frac{1}{1-z} \sim f(1)\log n.$$

4.2 Analytic functions and meromorphic functions

Analytic functions are the primary mathematical concept for complex asymptotics. They can be characterized in three essentially equivalent ways: by means of convergent series expansions (à la Cauchy and Weiertraß), by differentiability properties (à la Riemann), and by the fact that their integrals vanish on cycles. Meromorphic functions are simply quotients of analytic functions.

The presentation in this section and the next one is an informal reminder of basic properties of analytic functions intended for asymptotic analysis. For a detailed treatment, we refer the reader to one of the many excellent treatises on the subject, like the books by Dieudonné [2], Henrici [5], Knopp [6], Titchmarsh [15], or Whittaker and Watson [16].

Analytic functions. A function $f(z)$ of the complex variable z is *analytic* at a point $z = a$ if it is defined in a neighbourhood of $z = a$ and is representable there by a convergent power series expansion

$$f(z) = \sum_{n\geq 0} f_n(z-a)^n. \tag{4.4}$$

The functions analytic at a point $z = a$ are closed under sum and product. If $f(z)$ and $g(z)$ are analytic at $z = a$, then so is their quotient $f(z)/g(z)$ provided $g(a) \neq 0$. (Analytic functions are both an algebra and an integral domain.)

Analytic functions are also closed under composition: if $f(z)$ is analytic at $z = a$ and $g(w)$ is analytic at $w = f(a)$, then $g \circ f$ is analytic at $z = a$. Inverse functions exist conditionally: if $f'(a) \neq 0$, then $f(z)$ is locally invertible, so that there exists an analytic g satisfying $f \circ g = g \circ f = Id$, where Id is the identity function, $Id(z) \equiv z$.

These closure properties are commonly established by a two-step process: (i) corresponding closure properties are shown to hold true for formal power series; (ii) the resulting formal power series are proved to be locally convergent by means of suitable majorizations on their coefficients. This is the basis of the classical method of majorizing series.

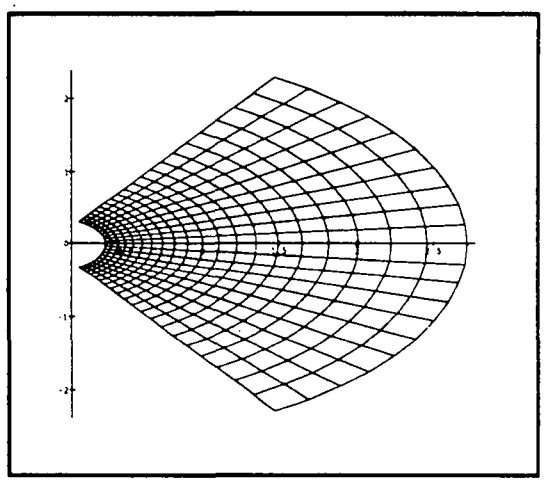

Figure 4.1: A function analytic at z_0 is complex-differentiable and it behaves around z_0 like $f(z_0)+(z-z_0)f'(z_0)$. If $f'(z_0) \neq 0$, then $f(z)$ is locally angle-preserving. The figure illustrates the property (infinitesimal squares get mapped into infinitesimal squares) by displaying the image of a grid on the unit square $|\Re(z)| \leq 1, |\Im(z)| \leq 1$ by $f(z) = \exp(z)$.

EXERCISE 2. [Sums, products, quotients] Use the method of majorizing series to prove that $f+g$, $f \times g$ and f/g are analytic at $z = a$ (with the condition $g(a) \neq 0$ in the case of the quotient f/g).

EXERCISE 3. [Inversion] Let $f(z) = \sum_{n=1}^{\infty} f_n z^n$ be a formal power series with $f_1 \neq 0$. Prove that there exists a formal power series $g(z)$ such that $f(g(z)) = g(f(z)) = z$ and that the formula expressing the coefficient g_n is a polynomial in $f_1, f_2, \ldots, f_n$. Find an explicit recurrence for the coefficients g_n.

Prove that g has a non-zero radius of convergence if f has that same property. (Consider $f(z) = Cz/(1-az)$ and reason on the formula giving the coefficients g_n. This is again an instance of the method of majorizing series.)

Given a function f that is analytic at a point a, there exists a disk (of possibly infinite radius) with the property that the series representing $f(z)$ is convergent for z inside the disk and divergent for z outside the disk. The disk is called the *disk of convergence* and its radius is the *radius of convergence* of $f(z)$ at $z = a$.

The definitions we have given so far are essentially local. A function is analytic in a region (a connected open set) Ω iff it is analytic at every point of Ω.

Differentials. A function $f(z)$ is called *complex-differentiable* (also *holomorphic*) at $z = a$ if the quantity

$$\frac{df(z)}{dz} = \lim_{\Delta z \to 0} \frac{f(z + \Delta z) - f(z)}{\Delta z}$$

exists and is independent of the way Δz tends to 0. The definition is again extended to arbitrary regions.

It follows from a well known theorem of Riemann (see for instance [5, vol. 1, p 143]) that a function is analytic in a region Ω if and only if it is complex differentiable in Ω.

Integrals. An important concept is this context is that of a *simply connected* domain: a connected open set is simply connected if simple closed paths can be continuously deformed into points. A typical instance is the interior domain defined by a simple curve, for example an open disk; in contrast, a punctured disk or a circular annulus are *not* simply connected.

It is a basic theorem that if f is analytic inside a simply connected open set Ω, then the curvilinear integral $\int_\Gamma f(z)\,dz$ taken along a path Γ in Ω depends only on the end points of Γ. The function $f(z)$ then admits a primitive along arcs. If Ω is simply connected and Γ is taken to be a closed curve lying inside Ω, then the integral $\int_\Gamma$ equals 0. The property for a function defined over a simply connected domain to have its integrals along "cycles" (simple closed paths) equal to zero is in fact exactly equivalent to analyticity.

Meromorphic functions and residues. The quotient of two analytic functions $f(z)/g(z)$ ceases to be analytic at a point a where $g(a) = 0$. However, a simple structure for quotients of analytic functions prevails.

A function $h(z)$ is *meromorphic* at $z = a$ iff in a neighbourhood of $z = a$ with $z \neq a$ it is representable by an expansion of the form

$$h(z) = \sum_{n \geq -M} h_n (z - a)^n. \tag{4.5}$$

If $h_{-M} \neq 0$, then $h(z)$ is said to have a pole of order M at $z = a$. Equivalently, $h(z)$ is meromorphic at $z = a$ iff it can be represented as $f(z)/g(z)$, with $f(z)$ and $g(z)$ being analytic at $z = a$. When $h(z)$ has a pole of order

$M \geq 1$ at $z = a$, then the coefficient h_{-1} is called the *residue* of $h(z)$ at $z = a$ and it is designated by

$$\mathrm{Res}[h(z); z = a]$$

or occasionally, using an extension of previous notations, $[\frac{1}{z-a}]h(z)$. Like for analytic functions, a function is meromorphic in a domain iff it is meromorphic at any point of the domain.

We have the important *residue theorem* whose merit is to relate global properties of a meromorphic function (its integral along curves) to its local properties at designated points, the poles.

Theorem 4.1 (Cauchy's residue theorem) *Let Γ be a simple closed curve oriented positively and situated inside a simply connected region Ω (like a disk), and assume $g(z)$ to be meromorphic in Ω and analytic on Γ. Then*

$$\frac{1}{2i\pi}\int_\Gamma h(z)\,dz = \sum_s \mathrm{Res}[h(z); z = s],$$

where the sum is extended to all poles s of $h(z)$ enclosed in Γ.

Proof. (Sketch) To see it in the representative case where $h(z)$ has only a pole at $z = 0$, observe by appealing to primitive functions that

$$\int_\Gamma h(z)\,dz = \sum_{\substack{n \geq -M \\ n \neq -1}} h_n \left[\frac{z^{n+1}}{n+1}\right]_\Gamma + h_{-1}\int_\Gamma \frac{dz}{z},$$

where the bracket notation $[u(z)]_\Gamma$ designates the variation of the function $u(z)$ along the contour Γ. This expression reduces to its last term, itself equal to $2i\pi h_{-1}$, as is checked by using integration along a circle (set $z = re^{i\theta}$).

The computation extends by translation to the case of a unique pole at $z = a$. The case of multiple poles follows from a simple decomposition of the interior domain of Γ into cells each containing only one pole. □

A very important application of the residue theorem concerns coefficients of analytic functions.

Theorem 4.2 (Cauchy's Coefficient Formula) *Let $f(z)$ be analytic in a a simply connected region (like a disk)and let Γ be a closed curve oriented positively and located inside D that simply encircles the origin. Then the coefficient $[z^n]f(z)$ admits the integral representation*

$$f_n \equiv [z^n]f(z) = \frac{1}{2i\pi}\int_\Gamma f(z)\,\frac{dz}{z^{n+1}}.$$

Proof. This formula, follows directly from the Residue Theorem since

$$[z^n]f(z) = \text{Res}\left[\frac{f(z)}{z^{n+1}}; z = 0\right].$$

□

The coefficient formula allows to deduce information about the coefficients from the behaviour of the function itself using adequately chosen contours of integration Γ. It opens the possibility of estimating the coefficients $[z^n]f(z)$ in the expansion of $f(z)$ near 0 by using information on $f(z)$ *away* from 0.

EXERCISE 4. [Liouville's theorem] If a function $f(z)$ is analytic in the whole of $\mathbb{C}$ and of modulus bounded by a constant, $|f(z)| \leq B$, then it is constant. [Hint: All its Taylor coefficients at the origin of order ≥ 1 equal 0.]

If $f(z)$ is of at most polynomial growth, $|f(z)| \leq B\,(|z|+1)^r$, then it is a polynomial.

4.3 Singularities

A singularity[1] can be informally defined as a point where a function ceases to be analytic.

For instance, let $f(z)$ be an analytic function defined over the interior domain Ω delimited by a simple closed curve in the complex plane. A *singularity* is a point z_0 on the boundary of Ω such that it is not possible to determine an extension $f^*(z)$ of $f(z)$ defined over an open set $\Omega^* \supset \Omega$ containing z_0, with $f^*(z)$ analytic on Ω^*. In simpler terms, *the function is singular at z_0 if it cannot be continued as an analytic function beyond z_0.*

Poles of meromorphic functions are particularly simple types of singularities.

Definition 4.1 *Singularities of smallest modulus of a function analytic at* 0 *are called* dominant *singularities.*

Dominant singularities play an essential rôle in the asymptotic analysis of coefficients of generating functions, as we shall see in the next section.

[1] For a precise discussion, see [2, p. 229], [6, vol. 1, p. 82], or [15].

Rephrasing an earlier observation (a converging Taylor series is analytic), we get that a function analytic at 0 which is represented by a Taylor series at $z = 0$ with a finite radius of convergence always has (at least) one singularity on its circle of convergence. In addition, a classical theorem, called Pringsheim's theorem [15, Sec. 7.21], provides a refinement of this property in the case of functions with nonnegative coefficients.

Theorem 4.3 *(i). A function analytic at the origin and with a finite radius of convergence is analytic in the interior of its disk of convergence and it always has a singularity on the boundary of its disk of convergence.*

(ii). [Pringsheim's Theorem] *If a function with a finite radius of convergence has Taylor coefficients that are nonnegative, then one of its singularities singularities of smallest modulus (a dominant singularity) is real positive.*

The second part of this theorem appreciably simplifies the search for singularities of combinatorial generating functions since they have nonnegative coefficients.

In the realm of combinatorial enumerations, the derangement generating functions,

$$\frac{e^{-z}}{1-z}, \quad \frac{e^{-z-z^2/2}}{1-z},$$

are analytic except for a simple pole at $z = 1$, the surjection generating function $(2 - e^z)^{-1}$ is analytic except for points $z_k = \log 2 + 2ik\pi$ that are poles. Thus the dominant singularities for derangements and surjections are 1 and $\log 2$ respectively.

It is known that $\sqrt{z}$ having two determinations cannot be unambiguously defined as an analytic function in a neighbourhood of 0. The structure of $\sqrt{z}$ near 0 is best studied by appealing to polar coordinates: if $z = re^{i\theta}$, then $\sqrt{z} = \sqrt{r}e^{i\theta/2}$, which cannot be defined as a continuous function in any complete neighbourhood of 0. For instance, following a full circle around 0 continuously changes $\sqrt{z}$ into $-\sqrt{z}$, and a similar phenomenon hold for $\log z$ which gets changed into $\log z \pm i\pi$. Such points near which a function has inherently multiple determinations are called *branch points*.

As a consequence, the function

$$C(z) = (1 - \sqrt{1 - 4z})/2,$$

which is the generating function of the Catalan numbers, is an analytic function in a region that should exclude 1/4, for instance in the complex

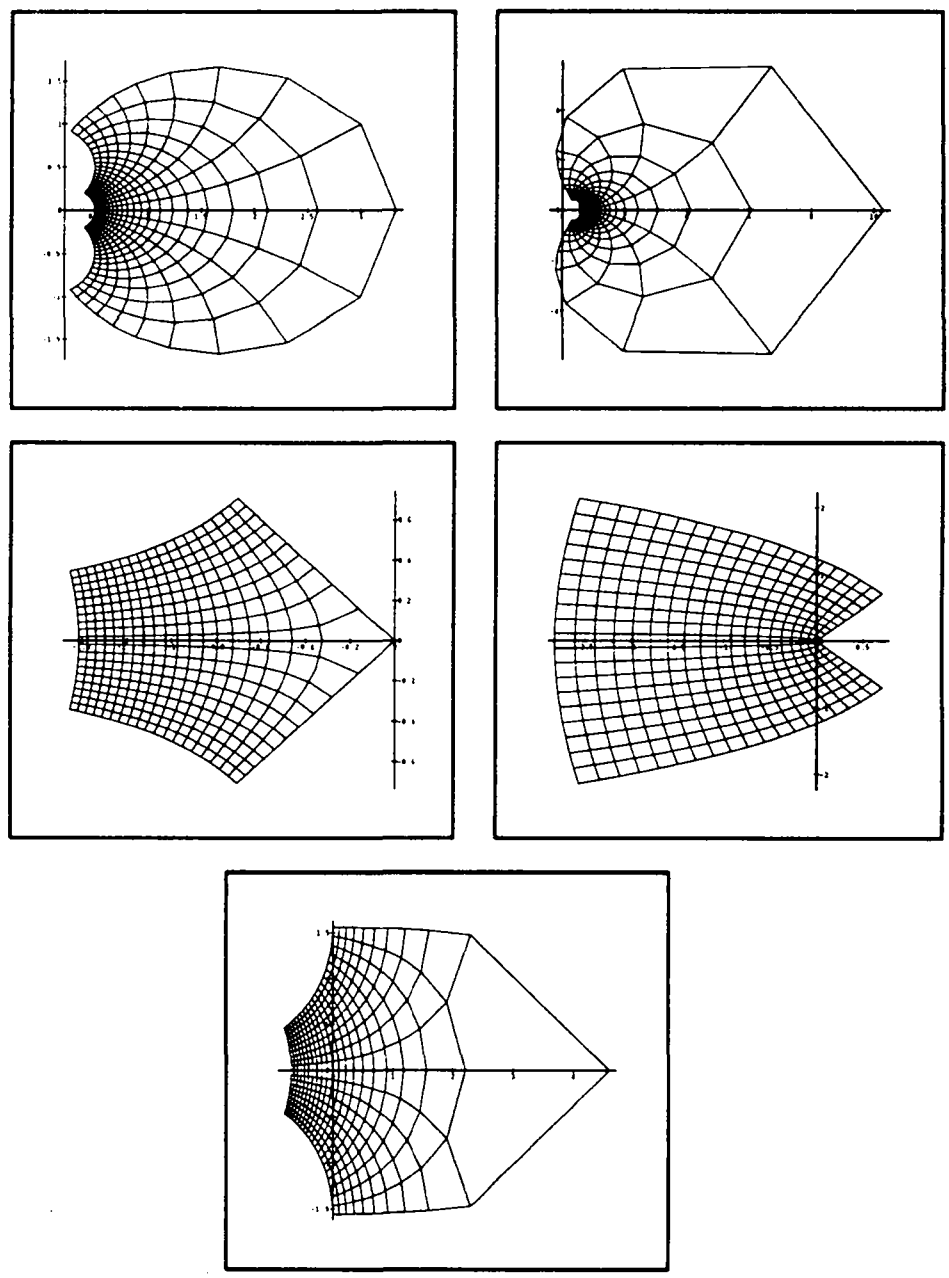

Figure 4.2: The images of a grid on the unit square (with corners $\pm 1 \pm i$) by various functions singular at $z = 1$ reflect the nature of the singularities involved. Here (from top to bottom) $f_0(z) = 1/(1-z)$, $f_1(z) = \exp(z/(1-z))$, $f_2(z) = -(1-z)^{1/2}$, $f_3(z) = -(1-z)^{3/2}$, $f_4(z) = \log(1/(1-z))$. The functions have been normalized to be increasing over the real interval $[-1, 1]$. Singularities are apparent near the right of each diagram where small grid squares get folded or unfolded in various ways. (In the case of functions f_0, f_1, f_4 that become infinite at $z = 1$, the grid has been slightly truncated to the right.)

plane slit along the ray $(1/4, +\infty)$. Similarly, the function

$$L(z) = \log \frac{1}{1-z}$$

which is the EGF of cyclic permutations is analytic in the complex plane slit along $(1, +\infty)$. (An alternative way of seeing that $C(z)$ and $L(z)$ are singular at $\frac{1}{4}$ and 1 is to observe that their derivatives become infinite along rays $z \to \frac{1}{4}^-$ and $z \to 1^-$.)

Note. According to a more "modern" point of view originating with Riemann, the function $C(z)$ can also be considered as a multivalued function formed of two "branches", namely $(1 \pm \sqrt{1-4z})/2$, and defined over all of the complex plane with a singularity at $z = 1/4$ (called a branch point since two branches "meet"). A precise treatment of functions in this perspective however requires the theory of Riemann surfaces, which we shall normally avoid.

EXERCISE 5. Examine the branch structure and the singularities of the shifted Catalan GF,

$$C^*(z) = \frac{1-\sqrt{1-4z}}{2z}.$$

Consider the same problem for the GF of the harmonic numbers,

$$H(z) = \frac{1}{1-z} \log \frac{1}{1-z},$$

and for

$$K(z) = \log\left(\frac{1}{z} \log \frac{1}{1-z}\right).$$

A function with no singularity at a finite distance is called *entire*; its Taylor series then converges everywhere in the complex plane. Thus,

$$e^{z+z^2/2}, \quad e^{e^z-1},$$

related to involutions and set partitions are entire.

For functions defined by analytic expressions, singularities can be determined inductively in an intuitively transparent manner. If Sing(f) and Zero(f) are the set of singularities and zeros of function f, then, due to closure properties of analytic functions, the following informally stated rules apply.

$$\begin{cases} \mathrm{Sing}(f \pm g) & \subseteq & \mathrm{Sing}(f) \cup \mathrm{Sing}(g) \\ \mathrm{Sing}(f \times g) & \subseteq & \mathrm{Sing}(f) \cup \mathrm{Sing}(g) \\ \mathrm{Sing}(f/g) & \subseteq & \mathrm{Sing}(f) \cup \mathrm{Sing}(g) \cup \mathrm{Zero}(g) \\ \mathrm{Sing}(f \circ g) & \subseteq & \mathrm{Sing}(g) \cup g^{(-1)}(\mathrm{Sing}(f)) \\ \mathrm{Sing}(\sqrt{f}) & \subseteq & \mathrm{Sing}(f) \cup \mathrm{Zero}(f) \\ \mathrm{Sing}(\log(f)) & \subseteq & \mathrm{Sing}(f) \cup \mathrm{Zero}(f) \\ \mathrm{Sing}(f^{(-1)}) & \subseteq & f(\mathrm{Sing}(f)) \cup f(\mathrm{Zero}(f')). \end{cases}$$

A mathematically rigorous treatment would again require considering multivalued functions and Riemann surfaces, so that we do not state detailed validity conditions and keep for these formulæ the status of useful heuristics. In fact, because of Pringsheim's theorem, the search of dominant singularities for combinatorial generating function can often avoid considering the multivalued structure of functions, since only the positive real half-line needs to be considered.

EXERCISE 6. Let f, g have non negative coefficients, and assume that f is entire, g not entire with radius of convergence ρ. Determine the radius of convergence of $f \circ g$ and $g \circ f$.

4.4 The Exponential Growth Formula

We say that a number sequence $\{a_n\}$ is of *exponential order* K^n which we abbreviate as

$$a_n \asymp K^n \qquad \text{iff} \qquad \limsup |a_n|^{1/n} = K.$$

In other words, for any $\epsilon > 0$:

$|a_n| >_{i.o} (K - \epsilon)^n$, that is to say that $|a_n|$ exceeds $(K - \epsilon)^n$ infinitely often (for infinitely many values of n);

$|a_n| <_{a.e.} (K + \epsilon)^n$, that is to say that $|a_n|$ is dominated by $(K + \epsilon)^n$ almost everywhere (except for possibly finitely many values of n).

Another way of viewing this relation is as $|a_n| = \vartheta(n)K^n$, where ϑ is a "subexponential factor" satisfying

$$\limsup |\theta(n)|^{1/n} = 1;$$

such a factor is thus bounded from above almost everywhere by any increasing exponential and bounded from below infinitely often by any decaying exponential.

Theorem 4.4 (The Exponential Growth Formula) *If $f(z)$ is analytic at 0 and R is the modulus of a singularity of $f(z)$ nearest to the origin,*

$$R = \min\{\, |z| \,,\, z \in \mathrm{Sing}(f)\,\},$$

then the coefficient $f_n = [z^n]f(z)$ satisfies

$$f_n \asymp \left(\frac{1}{R}\right)^n \qquad \textit{or equivalently} \qquad f_n = \left(\frac{1}{R}\right)^n \theta(n) \textit{ with } \limsup |\theta(n)|^{1/n} = 1.$$

Proof. The lower bound follows since otherwise the series would converge (and hence be analytic) in a larger domain. The upper bound results from trivial bounds on Cauchy's coefficient formula upon taking as contour Γ a circle of radius $R - \eta$:

$$\begin{aligned} |f_n| &\leq \frac{1}{2\pi} \frac{\max\{|f(z)| \,/\, |z| = R - \eta\}}{|R - \eta|^{n+1}} \cdot (2\pi R) \\ &\leq \mathcal{O}((R - \eta)^{-n}). \end{aligned}$$

□.

The exponential growth formula thus directly relates the exponential order of growth of coefficients of a function to the *location* of its singularities. Several applications to combinatorial enumerations are given below.

Examples. *1. Surjections.* The function

$$R(z) = (2 - e^z)^{-1}$$

is the EGF of surjections. Its dominant singularity is the unique positive root of $e^\rho = 2$, that is $\rho = \log 2$. Thus, with $r_n = [z^n]R(z)$,

$$r_n \asymp \left(\frac{1}{\log 2}\right)^n.$$

Similarly, if "double" surjections are considered (each value in the range of the surjection is taken at least twice), the corresponding EGF is

$$R^*(z) = \frac{1}{2 - z - e^z},$$

so that the coefficient r_n^* satisfies: $r_n^* \asymp (\frac{1}{\rho^*})^n$ where ρ^*, the smallest positive root of equation $e^{\rho^*} - \rho^* = 2$. Numerically, this gives

$$r_n \asymp 1.44269^n \qquad \text{and} \qquad r_n^* \asymp 0.87245^n.$$

These estimates constitutes a weak form of a more precise result to be established later in this chapter: If random surjections of size n are taken equally likely, the probability of finding a double surjection (r_n^*/r_n) is exponentially small.

2. *Derangements.* There, we have, from the poles at $z = 1$,

$$d_{1,n} \asymp 1^n \quad \text{and} \quad d_{2,n} \asymp 1^n.$$

The upper bound is combinatorially trivial. The lower bound expresses that the probability for a random permutation to be a derangement is *not* exponentially small. For $\delta_{1,n}$, we have already proved by an elementary argument the stronger result $d_{1,n} \to e^{-1}$; in the case of $d_{2,n}$, we shall establish the asymptotic equivalent $d_{2,n} \to e^{-3/2}$, in accordance with what was announced in the introduction.

3. *Integer Partitions.* The function

$$p(z) = \prod_{k=1}^{\infty} \frac{1}{1 - z^k}$$

is the OGF of integer partitions. It is singular at every point of the circle $z = 1$ (one also says that it admits the unit circle as a natural boundary, as it cannot be continued any further). Therefore $p_n \asymp 1^n$. The actual growth of the coefficients is of the form $e^{O(\sqrt{n})}$ as we shall prove when studying saddle point bounds. Observe that, despite the presence of an exponential, we have $e^{\sqrt{n}} \asymp 1^n$.

EXERCISE 7. Prove that $p(re^{i\theta}) \to \infty$ as $r \to 1^-$, for any angle θ that is a rational multiple of 2π. Such points being dense on the unit circle, the function $p(z)$ admits the unit circle as a natural boundary.

4. *Unary-Binary trees.* The expression

$$U(z) = \frac{1 - z - \sqrt{1 - 2z - 3z^2}}{2z} = z + z^2 + 2\,z^3 + 4\,z^4 + 9\,z^5 + \cdots,$$

represents the OGF of unary–binary trees. From the equivalent form,

$$U(z) = \frac{1 - z - \sqrt{(1-3z)(1+z)}}{2z},$$

it follows that $U(z)$ is singular at $z = -1$ and $z = 1/3$. Therefore,

$$U_n \asymp 3^n.$$

EXERCISE 8. Design an encoding of plane unlabelled unary–binary trees by words over a ternary alphabet in order to deduce combinatorially that

$$U_n \leq 3^n.$$

[Use the "Polish" notation of Lukasiewicz.]

4.5 Rational and meromorphic functions

A first principle that we have just encountered is:

> *The location of singularities of an analytic function determines the exponential order of growth of its Taylor coefficients.*

A second principle which refines the first one is:

> *The nature of the singularities determines the way the dominant exponential term in coefficients is modulated by a subexponential factor.*

We are now going to illustrate the precise correspondence between singular expansions and asymptotic behaviours of coefficients in the case of rational and meromorphic functions. Rational functions (fractions) are the simplest, and from their basic partial fraction expansion, closed forms are derived for their coefficients. The next class of functions in order of difficulty is the class of meromorphic functions; their Taylor coefficients appear to admit very accurate asymptotic expansions with error terms that are usually exponentially small.

4.6 Rational functions

A function $f(z)$ is a *rational function* iff it can be put under the form $f(z) = \frac{N(z)}{D(z)}$, with $N(z)$ and $D(z)$ being (relatively prime) polynomials. Since we are interested here in generating functions, we may safely assume that $D(0) \neq 0$.

Sequences $\{f_n\}_{n\geq 0}$ that are coefficients of rational functions coincide with sequences that satisfy linear recurrence relations with constant coefficients. To see it, compute $[z^n]f(z)\cdot D(z)$, with $n > deg(N(z))$. If $D(z) = d_0 + d_1 z + \cdots + d_m z^m$, then for $n > m$, one has:

$$\sum_{j=0}^{m} d_j f_{n-j} = 0.$$

The main theorem we prove here provides an *exact* finite expression for coefficients of $f(z)$ in terms of the poles of $f(z)$. Individual trems in corresponding expressions are sometimes called exponential polynomials.

Theorem 4.5 (Expansion of rational functions) *If $f(z)$ is a rational function that is analytic at zero and has poles at points $\alpha_1, \alpha_2, \ldots, \alpha_m$, then there exist m polynomials $\{\Pi_j(x)\}_{j=1}^{m}$ such that:*

$$f_n \equiv [z^n]f(z) = \sum_{j=1}^{m} \Pi_j(n)\alpha_j^{-n}. \tag{4.6}$$

Furthermore the degree of Π_j is equal to the order of the pole of f at α_j minus one.

Proof. Since $f(z)$ is rational it has a partial fraction expansion. Thus, assuming without loss of generality that $deg(D) > deg(N)$, we can decompose it into a finite sum

$$f(z) = \sum_{\alpha,r} \frac{c_{\alpha,r}}{(z-\alpha)^r},$$

where α ranges over the poles of $f(z)$ and r ranges over a finite integer interval determined by the largest multiplicity of any pole of f. Coefficient extraction in this expression results from Newton's expansion,

$$[z^n]\frac{1}{(z-\alpha)^r} = \frac{(-1)^r}{\alpha^r}[z^n]\frac{1}{(1-\frac{z}{\alpha})^r} = \frac{(-1)^r}{\alpha^r}\binom{n+r-1}{r-1}\alpha^{-n}.$$

The binomial coefficient is a polynomial of degree $r-1$ in n, and collecting terms associated with a given α yields the statement of the theorem. $\square$

Notice that the expansion (4.6) is also an asymptotic expansion in disguise: when grouping terms according to the α's of increasing modulus, each group appears to be *exponentially smaller* than the previous one. A classical instance is the OGF of Fibonacci numbers,

$$f(z) = \frac{z}{1 - z - z^2} = \frac{z}{1 - z - z^2},$$

with poles at

$$\frac{-1 + \sqrt{5}}{2} \approx 0.61803, \quad \frac{-1 - \sqrt{5}}{2} \approx -1.61803,$$

so that

$$F_n = \frac{1}{\sqrt{5}}\varphi^n - \frac{1}{\sqrt{5}}\bar{\varphi}^n = \frac{\varphi^n}{\sqrt{5}} + O(\frac{1}{\varphi^n}),$$

with $\varphi = (1 + \sqrt{5})/2$ the golden ratio, and $\bar{\varphi}$ its conjugate.

Examples. *1. The rational function*

$$f(z) = \frac{1}{(1 - z^3)^2(1 - z^2)^3(1 - \frac{z^2}{2})}$$

has a pole of order 5 at $z = 1$, poles of order 2 at $z = \omega, \omega^2$ ($\omega = e^{2i\pi/3}$ a cubic root of unity), a pole of order 3 at $z = -1$, and simple poles at $z = \pm\sqrt{2}$. Therefore,

$$f_n = P_1(n) + P_2(n)\omega^{-n} + P_3(n)\omega^{-2n} + P_4(n)(-1)^n +$$
$$+ P_5(n)2^{-n/2} + P_6(n)(-1)^n 2^{-n/2}$$

where the degrees of $P_1, \ldots, P_6$ are respectively $4, 1, 1, 2, 0, 0$. For an asymptotic equivalent of f_n, only the pole at $z = 1$ needs to be considered since it corresponds to the fastest exponential growth; in addition, at $z = 1$, only the term of fastest growth needs to be taken into account since it gives the dominant contribution to coefficients. Thus, we have the correspondence

$$f(z) \sim \frac{1}{3^2 \cdot 2^3 \cdot (\frac{1}{2})} \frac{1}{(1 - z)^5} \implies f_n \sim \frac{1}{3^2 \cdot 2^3 \cdot (\frac{1}{2})} \binom{n + 4}{4} \sim \frac{n^4}{864}.$$

As this example demonstrates the main asymptotic equivalent can be determined using only partial information on the *shape* of the function itself, the details of the full decomposition being not required. Yet another illustration of this situation follows.

2. *The Denumerant generating function*

$$D(z) = \prod_{j=1}^{k} \frac{1}{1 - z^j}$$

is the OGF of integer partitions into summands in $\{1, 2, \ldots, k\}$. It has a pole of order k at $z = 1$ while having poles of order strictly less than k at other roots of unity. We find

$$D(z) = \frac{1}{k!}\frac{1}{(1-z)^k} + \frac{P(z)}{(1-z)^{k-1}} + \sum_{\zeta} \frac{P_\zeta(z)}{(z-\zeta)^{k-1}}$$

where ζ ranges over a finite set of roots of unity (roots of order $\leq k$). Again only the terms of larger growth need to be considered corresponding to $z = 1$, and we have

$$D(z) \sim \frac{1}{k!}(1-z)^{-k} \quad \Longrightarrow \quad D_n \sim \frac{1}{k!}\binom{n+k-1}{k-1} \sim \frac{n^{k-1}}{k!(k-1)!}.$$

EXERCISE 9. The US coinage system. Given pennies (1 cent), nickels (5 cents), dimes (10 cents) and quarters (25 cents), the number of ways to make change for a total of n cents is

$$[z^n]\frac{1}{(1-z)(1-z^5)(1-z^{10})(1-z^{25})} \sim \frac{1}{1\cdot 5\cdot 10\cdot 25}\frac{n^3}{3!} = \frac{n^3}{7500}.$$

Generalize to an arbitrary set of coin denominations.

EXERCISE 10. Find the first two terms in the asymptotic expansion of D_n and of

$$[z^n]\frac{1}{(1-z)(1-z^2)(1-z^4)\cdots(1-z^{2^m})}.$$

Define

$$f(z) = \frac{1}{(1-z)(1-z/2)(1-z/4)\cdots(1-z/2^m)}.$$

Express $[z^n]f(z)$ in terms of the pseudo-factorials, $\phi_r = (2^1-1)(2^2-1)\cdots(2^r-1)$. Find asymptotic equivalents for $[z^n]f^2(z)$ and $[z^n]f(z/(1-z))$ with as little computation as possible.

3. *Longest runs.* This is an instance of a parameterized problem. Take a fixed integer k; the probability that a random binary string of $\{0,1\}^n$ has no run of k consecutive 1's is

$$\frac{1}{2^n}[z^n]\frac{1-z^k}{1-2z+z^{k+1}}.$$

Let ρ_k be the smallest root of the denominator that lies between $\frac{1}{2}$ and 1: the probability is then for large n (but fixed k) asymptotic to $c_k(2\rho_k)^{-n}$, for some constant c_k. A table of the asymptotic forms for these probabilities appears below.

k	$c_k \cdot (2\rho_k)^{-n}$
2	$11.09016 \cdot 0.80901^n$
3	$3.47267 \cdot 0.91964^n$
4	$2.64726 \cdot 0.96378^n$
5	$2.33576 \cdot 0.98297^n$
10	$2.01784 \cdot 0.99950^n$

We empirically observe that $c_k \to 2$ and $\rho_k \approx 1-2^{-k-1}$. This can be proved: longest runs are discussed in Feller's book [3] and with more precise estimates for varying k and n by Knuth [7] in connection with carry propagation in certain adders. The end result is that the length of the longest run is on average $\log_2 n + O(1)$, see the last section of this chapter for more details.

4.7 Meromorphic Functions

An expansion very similar to that of Theorem 4.5 given for rational functions holds true for the larger class of coefficients of meromorphic functions.

Theorem 4.6 (Expansion of meromorphic functions) *Let $f(z)$ be a function meromorphic for $|z| \le R$ with poles at points $\alpha_1, \alpha_2, \ldots, \alpha_m$, and analytic for $|z| = R$ and $z = 0$. Then there exist m polynomials $\{\Pi_j(x)\}_{j=1}^m$ such that:*

$$f_n \equiv [z^n]f(z) = \sum_{j=1}^{m} \Pi_j(n)\alpha_j^{-n} + O(R^{-n}). \tag{4.7}$$

Furthermore the degree of Π_j is equal to the order of the pole of f at α_j minus one.

Proof. We offer two different proofs, one based on subtracted singularities, the other one based on contour integration.

Subtracted singularities. Around any pole α, $f(z)$ can be expanded locally:

$$f(z) = \sum_{k \geq -M} c_{\alpha,k}(z-\alpha)^k \tag{4.8}$$

$$= S_\alpha(z) + H_\alpha(z) \tag{4.9}$$

where the "singular part" $S_\alpha(z)$ is obtained by collecting all the terms with index in $[-M \,..\, -1]$ ($S_\alpha(z) = N_\alpha(z)/(z-\alpha)^M$ with $N_\alpha(z)$ a polynomial of degree less than M) and $H_\alpha(z)$ is analytic at α. Thus setting $R(z) = \sum_j S_{\alpha_j}(z)$, we observe that $f(z) - S(z)$ is analytic for $|z| \leq R$. In other words, by collecting the singular parts of the expansions and subtracting them, we have "removed" the singularities of $f(z)$, whence the name of "*method of subtracted singularities*" sometimes given to the method [5, vol. 2, p. 448].

Taking coefficients, we get:

$$[z^n]f(z) = [z^n]S(z) + [z^n](f(z) - S(z)).$$

The coefficient of $[z^n]$ in the rational function $S(z)$ is obtained from Theorem 1. It suffices to prove that the coefficient of z^n in $f(z) - S(z)$, a function analytic for $|z| \leq R$, is $\mathcal{O}(R^{-n})$. This fact follows from trivial bounds applied to Cauchy's integral formula with the contour of integration being $\Gamma = \{z \,/\, |z| = R\}$:

$$|[z^n](f(z) - S(z))| = \frac{1}{2\pi}\left|\int_{|z|=R}(f(z) - S(z))\frac{dz}{z^{n+1}}\right| \leq \frac{1}{2\pi}\frac{\mathcal{O}(1)}{R^{n+1}}2\pi R.$$

Contour integration. There is another line of proof for Theorem 4.6 which we briefly sketch as it provides an insight which is useful for applications to other types of singularities. It consists in using directly Cauchy's coefficient formula and "pushing" the contour of integration past singularities. In other words, one computes directly the integral

$$I_n = \frac{1}{2i\pi}\int_{|z|=R} f(z)\frac{dz}{z^{n+1}}$$

by residues. There is a pole at $z = 0$ with residue f_n and poles at the α_j with residues corresponding to the terms in the expansion stated in Theorem 4.6; for instance, if $f(z) \sim c/(z-a)$ as $z \to a$, then

$$\mathrm{Res}(f(z)z^{-n-1}, z = a) = \mathrm{Res}(\frac{c}{(z-a)}z^{-n-1}, z = a) = \frac{c}{a^{n+1}}.$$

Finally, by the same trivial bounds as before, I_n is $\mathcal{O}(R^{-n})$. □

Examples. *1. The Surjection Generating Function* is $R(z) = (2 - e^z)^{-1}$. We have already determined the poles. The one of smallest modulus is at $\log 2 = 0.69314$, the next ones are at $\log 2 \pm 2i\pi$ and their modulus is about 6.32. We first analyze the dominant pole: As z tends to $\log 2$, we have $R(z) \sim -\frac{1}{2}(z - \log 2)^{-1}$. There is no other pole in $|z| \leq 6$, say. Thus, for $r_n = [z^n]R(z)$, we find

$$R(z) \sim -\frac{1}{2} \cdot \frac{1}{z - \log 2} \qquad \Longrightarrow \qquad r_n \sim \frac{1}{2} \cdot \left(\frac{1}{\log 2}\right)^{n+1} + \mathcal{O}(6^{-n}). \tag{4.10}$$

The approximation in (4.10) should be quite good as the error term indicates. For instance with $n = 10$, the exponential term $\frac{1}{2}(\log 2)^{-11}$ has value 28.1766873361. The maximum of $|R(z)|$ on the circle $|z| = 6$ is readily determined to be 1.6095; thus the error term of $\mathcal{O}(6^{-n})$ in (4.10) can be made precise: it represents a quantity that is bounded from above by $1.6095 \cdot 6^{-n}$. Thus we predict that $r_n = 28.1766873361 \pm 3 \cdot 10^{-8}$. The accuracy of the asymptotic estimate is quite exceptional for such a small value as $n = 10$. The bound on the error is only slightly pessimistic, and a direct computation shows that $[z^{10}]R(z) = 28.1766873346$ which differs by only $1.5 \cdot 10^{9}$ from our approximation.

For the double surjection problem, $R^*(z) = (2 + z - e^z)$, we get

$$[z^n]R^*(z) \sim \frac{1}{e^{\rho^*} - 1}(\rho^*)^{-n-1},$$

with $\rho^* = 1.14619$ the smallest positive root of $e^{\rho^*} - \rho^* = 2$.

2. Generalized derangements. The probability that the shortest cycle in a random permutation of size n has length larger than k is

$$[z^n]\frac{e^{-\frac{z}{1} - \frac{z^2}{2} - \cdots - \frac{z^k}{k}}}{1 - z}.$$

For any fixed k, the generating function, call it $f(z)$, is equivalent to $e^{-H_k}/(1-z)$ as $z \to 1$. Accordingly the coefficients $[z^n]f(z)$ tend to e^{-H_k} as $n \to \infty$. Thus, due to meromorphy, we have the characteristic implication

$$f(z) \sim \frac{e^{-H_k}}{1 - z} \qquad \Longrightarrow \qquad [z^n]f(z) \sim e^{-H_k}.$$

The cases $k = 1, 2$ justify the estimates mentioned in the introduction.

As a side remark, the classical approximation of the harmonic numbers, $H_k \approx \log k + \gamma$ suggests $e^{-\gamma}/k$ as an approximation that might be valid for both large n and large k. This can be made precise; Shepp and Lloyd [14] have proved that, in accordance with this heuristic argument, the expected length of the shortest cycle in a random permutation of size n is symptotic to

$$\sum_{k=1}^{n} \frac{e^{-\gamma}}{k} \sim e^{-\gamma} \log n.$$

EXERCISE 11. Work out uniform, error bounds for the above estimates and deduce a complete proof of Shepp and Lloyd's result.

3. *Alternating permutations.* The function

$$f(z) = \tan(z) + \sec(z) = \frac{\sin(z) + 1}{\cos(z)}.$$

is the EGF of alternating (or "up-and-down") permutations. Singularities of $f(z)$ nearest to the origin are simple poles at $-\frac{3\pi}{2}, \frac{\pi}{2}, \frac{5\pi}{2}$. The asymptotic form of the coefficients then derives simply from the local expansion at the dominant pole:

$$f(z) \sim \frac{-2}{(z - \pi/2)} \qquad \Longrightarrow \qquad f_n = 2\left(\frac{2}{\pi}\right)^{n+1} + O(5^{-n}).$$

4. *Alignments.* These are sequences of cycles, with EGF

$$f(z) = \frac{1}{1 - \log(1 - z)^{-1}}.$$

There is a singularity when $\log(1-z)^{-1} = 1$, which is at $z = 1-e^{-1}$ and arises before $z = 1$ that renders the logarithm singular. Thus the computation of the asymptotic form of f_n only needs a local expansion near $(1 - e^{-1})$:

$$f(z) \sim \frac{-e^{-1}}{z - 1 + e^{-1}} \qquad \Longrightarrow \qquad [z^n]f(z) \sim \frac{e^{-1}}{(1 - e^{-1})^{n+1}}.$$

EXERCISE 12. Determine asymptotically

$$[z^n] \log\left(\frac{1}{1 - \log \frac{1}{1-z}}\right).$$

This is the EGF of cycles of cycles. [Hint: Take derivatives.]

4.8 Combinatorial schemas

Complex analytic methods are synthetic enough to render possible a general discussion of asymptotic properties of classical combinatorial schemas. Consider for instance two classes of combinatorial structures that are related by a sequence construction

$$\mathcal{C} = \mathfrak{S}\{\mathcal{A}\}.$$

Then for corresponding generating functions, we have

$$c(z) = \frac{1}{1 - a(z)}.$$

(This relation may be taken either in the sense of OGF's or EGF's, the distinction is here immaterial.)

We assume now a set $(\mathcal{H})$ of simple conditions on $a(z)$:

$(\mathcal{H})$ $c(0) = 0$ and $c'(0) \neq 0$ (a minor technical restriction); and there exists a ρ, $0 < \rho < 1$, such that $a(\rho) = 1$ and $a(z)$ is analytic at ρ.

Thus, along the positive real axis, $a(z)$ assumes the value 1 before it becomes singular; this is for instance always the case when $a(z)$ is infinite at its dominant positive singularity.

The function $c(z)$ has a simple pole at $z = \rho$ so that $c_n \sim \alpha\rho^{-n}$. To compute the constant α, just observe that

$$c(z) \sim \frac{1}{\rho a'(\rho)} \cdot \frac{1}{1 - z/\rho} \qquad \Longrightarrow \qquad c_n \equiv [z^n]c(z) \sim \frac{1}{\rho a'(\rho)} \cdot \rho^{-n}.$$

Consider next the number of $\mathcal{A}$-components in a random $\mathcal{C}$ structure of size n. Using bivariate generating functions, we find the expectation of this number:

$$\begin{aligned} \mu_n &= \frac{1}{c_n}[z^n] \frac{\partial}{\partial u} \frac{1}{1 - ua(z)}\bigg|_{u=1} \\ &= \frac{1}{c_n}[z^n] \frac{a(z)}{(1 - a(z))^2}. \end{aligned}$$

The problem reduces to taking coefficients in a single variable generating function with a double pole at $z = \rho$: set $h(z) = a(z)/(1 - a(z))^2$; then

$$h(z) \sim \frac{1}{(a'(\rho))^2} \frac{1}{(z - \rho)^2} \qquad \Longrightarrow \qquad [z^n]h(z) \sim \frac{n}{\rho^2(a'(\rho))^2}.$$

The net result is summarized by the following proposition.

Proposition 4.1 *Let $\mathcal{C} = \mathcal{A}^*$ be two classes related by the sequence construction. Assume that $c(z)$ satisfies the assumptions $(\mathcal{H})$. Then, the mean number of components in a random $\mathcal{C}$-structure of size n is asymptotic to*

$$\frac{1}{\rho a'(\rho)} n \qquad \text{as } n \to \infty.$$

Direct cases of application to combinatorial generating functions are

$$a_1(z) = \frac{z}{1-z}, \quad a_2(z) = e^z - 1, \quad a_3(z) = ze^z,$$

corresponding to integer compositions, surjections, and random mappings of height at most 1. Thus:

- The expected number of summands in a random composition of n (with OGF $(1 - a_1(z))^{-1}$) is $\sim \frac{n}{2}$;
- The expected cardinality of the range of a random surjection (the EGF is $(1 - a_2(z))^{-1}$) whose domain has cardinality n is asymptotic to βn with $\beta = 1/(2\log 2)$;
- The expected number of cyclic points in the special mappings considered (with EGF $(1 - a_3(z))^{-1}$) is $1 + \rho^{-1}$ where $\rho = 0.56714$ is the positive root of $\rho e^\rho = 1$.

This proposition has a special status since it deals with a general combinatorial schema —the sequence construction— under fairly general analytic conditions. In that context, a general result could be stated to the effect that the expected number of components in a random sequence is invariably of linear growth. A variance analysis can be conducted in similar terms (the variance is also linear). There even results from a general theorem of Bender [1] that the distribution of the number of components is asymptotically Gaussian under our assumptions.

EXERCISE 13. Check that under the assumptions made on $a(z)$, there is only one dominant singularity of modulus ρ for $c(z)$, namely, ρ itself.

Determine the standard deviation of the number of $\mathcal{A}$-components in a random $\mathcal{C}$ structure of size n, and show that the probability that it is either less than $\alpha_1 n$ or larger than $\alpha_2 n$ for any fixed α_1 and α_2: $\alpha_1 < \alpha < \alpha_2$, tends to 0 as n tends to infinity.

EXERCISE 14. Define

$$s_n = \sum_{k=1}^{n} \frac{k^{n-k}}{(n-k)!}.$$

Compute the OGF of s_n and deduce the asymptotic form of s_n. Make the error term as precise as possible.

EXERCISE 15. Write a 20 line (or so!) computer algebra programme that gives an asymptotic form, up to exponentially small terms, of

$$s_n^{(r)} = \sum_{k=1}^{n} \frac{k^{n-k+r}}{(n-k)!},$$

for r an integer ≥ 0. Run it for $r = 0 \ldots 10$.

Estimate asymptotically $s_n^{(-1)}$.

4.9 Functional equations

One of the most powerful features of complex analysis techniques is that they can be employed even when generating functions are only implicitly defined by *functional equations* that admit of no closed form solution. As in the case of explicit generating functions, the location of singularities provides exponential bounds. If furthermore, the solution to a functional equation can be proved to be meromorphic, precise asymptotic estimates for its coefficients can be derived. We treat examples of both situations: simple families of trees and balanced trees illustrate the technique of exponential bounds[2] while an original example of Pólya regarding the counting of certain molecules (graphs) can be subjected to a full analysis.

Iteration. The fact that complex asymptotic methods apply to functions only accessible through functional will be illustrated first by

$$E(z) = z + E(z^2 + z^3), \tag{4.11}$$

which corresponds to the OGF of balanced 2–3 trees. For fine asymptotics, it does not seem practicable to operate directly with the recurrence on $E_n =$

[2]The analysis will be made complete in later chapters by means of singularity analysis.

$[z^n]E(z)$ implied by (4.11),

$$E_n = \sum_{k=0}^{n} \binom{k}{n-2k} E_k \qquad \text{with } E_0 = 0,\ E_1 = 1.$$

In fact no closed form solution is known (nor likely to exist) for $E(z)$ and E_n. A complete asymptotic analysis of the E_n was given by Odlyzko in [11], and it requires the full power of singularity analysis methods to be developed in the next chapter. We present here the first stage of the analysis leading already to exponential bounds.

Let $\sigma(z) = z^2 + z^3$. Equation (4.11) can be solved by iteration in the ring of formal power series,

$$E(z) = z + \sigma(z) + \sigma^{[2]}(z) + \sigma^{[3]}(z) + \cdots, \tag{4.12}$$

where $\sigma^{[j]}(z)$ denotes the jth iterate of the polynomial σ. The expansion (4.12) does provide a formal solution,

$$E(z) = z + z^2 + z^3 + z^4 + 2\,z^5 + 2\,z^6 + 3\,z^7 + 4\,z^8 + 5\,z^9 + 8\,z^{10} + \cdots,$$

and the problem is to establish whether it defines a function analytic near the origin. Since $E(z)$ has positive coefficients, it is sufficient to restrict attention to the positive real line in the quest for dominant singularities.

It is easily realized that $\sigma(z)$ has a unique fixed point, $\rho = \sigma(\rho)$ on the positive real axis, and a simple computation shows that

$$\rho = \frac{1}{\varphi} \qquad \text{where} \qquad \varphi = \frac{1+\sqrt{5}}{2}$$

is the golden ratio. For any positive x satisfying $x < \rho$, the iterates $\sigma^{[j]}(x)$ must converge to 0 (see Fig. 4.3). Furthermore, since $\sigma(z) \sim z^2$ near 0, these iterates converge to 0 doubly exponentially fast; for instance, we have $\sigma(x) \le \frac{3}{2}x^2$ for $x \in [0, \frac{1}{2}]$, so that there

$$\sigma^{[j]}(x) \le (\frac{3}{2})^{2^j-1} x^{2^j}.$$

By the triangular inequality, $|\sigma(z)| \le (\sigma(|z|)$, the sum in (4.12) is a normally converging sum of analytic functions, and is thus itself analytic. Consequently $E(z)$ is analytic in the whole of the open disk $|z| < \rho$.

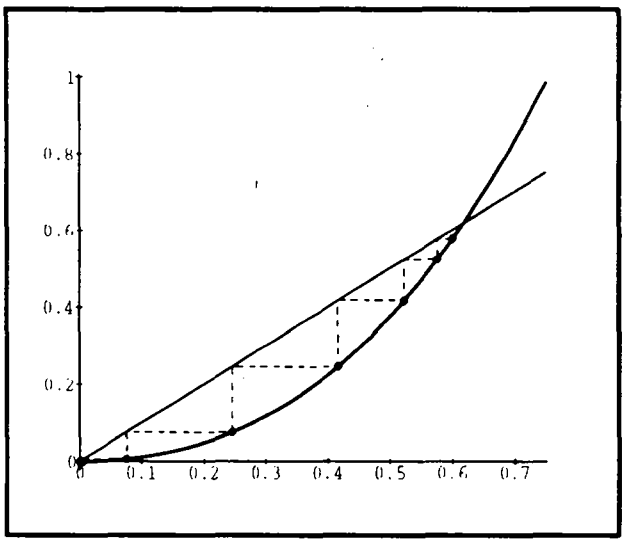

Figure 4.3: The iterate of a point $x_0 \in [0, \frac{1}{\varphi}]$ (here $x_0 = 0.6$) by $\sigma(z) = z^2 + z^3$ converge fast to 0.

It remains to prove that the radius of convergence of $E(z)$ is exactly equal to ρ. To that purpose it suffices to show that $E(z)$, as given by (4.12) satisfies

$$E(x) \to +\infty \qquad \text{as} \qquad x \to \rho^-.$$

Let N be an arbitrarily large but fixed integer. It is possible to select a positive x_N sufficiently close to ρ with $x_N < \rho$, such that the Nth iterate $\sigma^{[N]}(x_N)$ is larger than $\frac{1}{2}$ (the function $\sigma^{[N]}(x)$ admits ρ as a fixed point and it is continuous and increasing at ρ). Given the sum expression (4.12), this entails the lower bound $E(x_N) > \frac{N}{2}$ for such an $x_N < \rho$ so that $E(x)$ grows unbounded as $x \to \rho^-$.

The dominant positive real singularity of $E(z)$ is thus $\frac{1}{\varphi}$, and application of Cauchy bounds shows that

$$[z^n]\, E(z) \asymp \left(\frac{1+\sqrt{5}}{2}\right)^n.$$

It is notable that this estimate could be established so simply by a purely qualitative examination of the basic functional equation and of a fixed point of the associated iteration scheme.

EXERCISE 16. Find precise asymptotics for the number of 2-3 trees of height $\leq h$, that is to say $\sigma^{[h]}(1)$ as $h \to \infty$.

Find the asymptotic form of the expected number of internal nodes in such a tree when all $\sigma^{[h]}(1)$ trees are taken with equal likelihood.

Inverse functions. We consider next the problem of obtaining information on the coefficients of a function $y(z)$ defined by an implicit equation

$$y(z) = z\phi(y(z)), \tag{4.13}$$

where $\phi(u)$ is taken to be an entire function (possibly a polynomial) with nonnegative coefficients. In order for the problem to be well posed we assume that $\phi(0) \neq 0$.

The equation (4.13) occurs in the counting of various types of trees. For instance, $\phi(u) = e^u$ corresponds to labelled Cayley trees, $\phi(u) = (1+u)^2$ to binary trees, and $\phi(u) = 1 + u + u^2$ to plane unary–binary trees. (A function like $(1-u)^{-1}$ associated with general plane trees does not satisfy the conditions above, but it may be simply treated by similar methods.) A full analysis of the problem was developed by Meir and Moon [10] elaborating on earlier ideas of Pólya.

Equation (4.13) may be rephrased as

$$\psi(y(z)) = z \qquad \text{where} \qquad \psi(u) = \frac{u}{\phi(u)}, \tag{4.14}$$

so that it is a generic instance of the inversion problem for analytic functions: $y = \psi^{(-1)}$. We first observe that (4.13) and (4.14) admit unique formal power series solutions by the method of indeterminate coefficients. An application of the technique of majorizing series shows that this formal solution also represents an analytic function near the origin, with $y(0) = 0$. In addition, the coefficients of $y(z)$ are all nonnegative.

We now digress and examine a hardly more general problem: given a function ψ analytic at a point y_0 with $z_0 = \psi(y_0)$ what can be said about its inverse, namely the solution to the equation $\psi(y) = z$ when z is near z_0 and y near y_0? Two cases occur depending on the value of $\psi'(y_0)$.

Regular case. If $\psi'(y_0) \neq 0$, then ψ admits an analytic expansion near y_0:

$$\psi(y) = \psi(y_0) + (y - y_0)\psi'(y_0) + \frac{1}{2}(y - y_0)^2\psi''(y_0) + \cdots.$$

Solving formally for y suggests that

$$y - y_0 \sim \frac{1}{\psi'(y_0)}(z - z_0). \tag{4.15}$$

A full formal expansion of $y - y_0$ in powers of $z - z_0$ is obtained by repeated substitution,

$$y - y_0 = c_1(z - z_0) + c_2(z - z_0)^2 + \cdots \tag{4.16}$$

and the method of majorizing series shows that the series so obtained converges locally in a sufficiently small neighbourhood of z_0. Rouché's theorem (see the last section of this chapter) implies that the equation $\psi(y) = z$ admits there a unique analytic solution. In other words, *an analytic function locally admits an analytic inverse near any point where its first derivative is nonzero.*

Singular case. If to the contrary $\psi'(y_0) = 0$ and $\psi''(y_0) \neq 0$, then the expansion of ψ is of the form

$$\psi(y) = \psi(y_0) + \frac{1}{2}(y - y_0)^2\psi''(y_0) + \cdots. \tag{4.17}$$

Solving formally for y now suggests that

$$(y - y_0)^2 \sim \frac{2}{\psi''(y_0)}(z - z_0),$$

so that the inversion problem should admit two solutions satisfying

$$y - y_0 \sim \pm\sqrt{\frac{2}{\psi''(y_0)}}(z - z_0)^{1/2}.$$

The point z_0 is thus a branch point.

A similar reasoning applies whenever the first nonzero derivative of ψ at y_0 is of order $r \geq 2$ (with a local behaviour for y then of the form $(z - z_0)^{1/r}$). Thus, the dependency between y and z cannot be analytic around (y_0, z_0). In other words, *an analytic function is not locally analytically invertible near any point where its first derivative is zero.*

After these general considerations, we return to the original equation (4.13), with $\psi(u) = u/\phi(u)$, and $y(z)$ the inverse function of ψ near the origin. The function $y(z)$ increases along the positive real axis. The equation $\psi'(\tau) = 0$ which is expected to create singularities for $y(z)$ is in terms of ϕ:

$$\phi(\tau) - \tau\phi'(\tau) = 0. \tag{4.18}$$

The function $\phi(u) = \sum_{k=0}^{\infty} \phi_k u^k$ being entire, the equation (4.18) is equivalent to

$$\phi_0 = \phi_2\tau^2 + 2\phi_3\tau^3 + \cdots,$$

which admits a unique positive solution.

As z increases, starting from 0 along the positive real axis, $y(z)$ increases. Let $\rho \leq \infty$ be the dominant positive singularity of $y(z)$. We are going to prove that $y(\rho) = \tau$ (technically, we define $y(\rho)$ as the limit of $y(x)$ as $x \to \rho^-$). Assume a contrario that $y(\rho) < \tau$, then by the above observation, $y(z)$ could be analytically continued at $z = \rho$ by the above discussion on inverse functions in the regular case since $\phi'(y(\rho)) > 0$. If on the other hand, we had $y(\rho) > \tau$, then, there would be a value $\rho^* < \rho$ such that $y(\rho^*) = \tau$; but there, we have $\psi'(y(\rho^*)) = 0$, so that $y(z)$ should be singular at $z = \rho^*$ by the above discussion on inverse functions in the singular case. Thus, in both cases, we reach a contradiction, and we obtain that $y(\rho) = \tau$, corresponding to

$$\rho = \psi(\tau) = \tau/\phi(\tau).$$

Application of Cauchy bounds yields:

Proposition 4.2 *Let $y(z)$ be the solution analytic at the origin of the equation $y(z) = \phi(y(z))$, where ϕ has positive coefficients and is an entire function, possibly a polynomial. Then*

$$[z^n]\, y(z) \asymp \left(\frac{1}{\rho}\right)^n \qquad \text{where} \quad \rho = \frac{\tau}{\phi(\tau))}.$$

and τ is the unique positive real root of the equation

$$\phi(\tau) - \tau\phi'(\tau) = 0.$$

For instance corresponding to $\phi^{(L)}(u) = e^u$ (Cayley trees), $\phi^{(B)}(u) = (1+u)^2$ (binary trees), and $\phi^{(U)}(u) = 1+u+u^2$ (unary–binary trees), we find the values $\tau^{(L)} = \tau^{(B)} = \tau^{(U)} = 1$, so that the corresponding convergence radii for $y^{(L)}, y^{(B)}, y^{(U)}$ are $\rho^{(L)} = e^{-1}$, $\rho^{(B)} = \frac{1}{4}$, and $\rho^{(U)} = \frac{1}{3}$, in full agreement with estimates already derived. In fact, for all these problems, the asymptotic form of coefficients is invariably of the type

$$[z^n]\, y(z) \sim C \cdot \rho^{-n} n^{-3/2}.$$

as we shall prove in the next chapter by means of singularity analysis methods.

EXERCISE 17. Show that the above argument can be extended to $\phi(u) = (1+u^2)$ and $\phi(u) = (1-u)^{-1}$.

Complete asymptotics of a functional equation. This is Pólya's counting of certain molecules, a case where only a functional equation is known for a generating function, $M(z) = \sum_n M_n z^n$:

$$M(z) = \frac{1}{1 - zM(z^2)}. \tag{4.19}$$

The M_n represent the number of chemical isomeres of alcohols $C_n H_{2n+1} OH$ without asymmetric carbon atoms. Pólya [13] who established this functional equation in the historical paper that introduced "Pólya Theory" devloped at the same time a precise asymptotic estimate for M_n.

Proposition 4.3 *Let $M(z)$ be the solution analytic around 0 of the functional equation*

$$M(z) = \frac{1}{1 - zM(z^2)}.$$

Then, there exist constants $c \approx 0.36071$ and $K \approx 1.68136$ such that

$$M_n \sim 0.36071(1.68136)^n.$$

Proof. First, a sequence of formal approximants follows from (4.19) starting with

$$1,\ \frac{1}{1-z},\ \frac{1}{1-\frac{z}{1-z^2}} = \frac{1-z^2}{1-z-z^2},\ \frac{1}{1-\frac{z}{1-\frac{z^2}{1-z^4}}} = \frac{1-z^2-z^4}{1-z-z^2-z^4+z^5}.$$

This permits to compute any number of terms of $M(z)$:

$$M(z) = 1 + z + z^2 + 2\,z^3 + 3\,z^4 + 5\,z^5 + 8\,z^6 + 14\,z^7 + 23\,z^8 + 39\,z^9 + \cdots$$

Closer examination of (4.19) suggests to set

$$M(z) = \frac{\psi(z^2)}{\psi(z)},$$

where

$$\psi(z) = 1 - z - z^2 - z^4 + z^5 - z^8 + z^9 + z^{10} + z^{17} + z^{18} + z^{20} - z^{21} - z^{37} - \cdots$$

Back substitution into (4.19) yields

$$\frac{\psi(z^2)}{\psi(z)} = \frac{1}{1 - z\frac{\psi(z^4)}{\psi(z^2)}} \quad \text{or} \quad \frac{\psi(z^2)}{\psi(z)} = \frac{\psi(z^2)}{\psi(z^2) - z\psi(z^4)},$$

which shows $\psi(z)$ to be a solution of the functional equation

$$\psi(z) = \psi(z^2) - z\psi(z^4).$$

The coefficients of ψ are all in the set $\{0, -1, +1\}$, as they satisfy the recurrence

$$\psi_{4n} = \psi_{2n}, \quad \psi_{4n+1} = -\psi_n, \quad \psi_{4n+2} = \psi_{2n+1}, \quad \psi_{4n+3} = 0.$$

Thus, $M(z)$ appears as the quotient of two function, $\psi(z^2)/\psi(z)$; since $\psi(z)$ whose coefficients are bounded by 1 in absolute value, it is analytic in the unit disk, $M(z)$ is itself meromorphic in the unit disc. A numerical plot shows that that $\psi(z)$ has its smallest positive real zero at $\rho = 0.59485$, which is a simple zero of $\psi(z)$ and thus a pole of $M(z)$ as $\psi(\rho^2) \neq 0$. Thus

$$M(z) \sim \frac{\psi(\rho^2)}{(z-\rho)\psi'(\rho)} \quad \Longrightarrow \quad M_n \sim -\frac{\psi(\rho^2)}{\rho\psi'(\rho)} \left(\frac{1}{\rho}\right)^n.$$

Numerical computations then yield Pólya's estimate. Et voilà!

□

EXERCISE 18. Write a computer programme to determine the constants c and K to fifty decimal places. [Note: Pólya determined them to five decimals by hand!]

Find a characterization of $\psi_n = [z^n]\psi(z)$ based on the binary representation of n. Tabulate ψ_n for all $n \in (10^{1000}, 10^{1000} + 10^{500})$, possibly using some compressed format.

Find the asymptotic proportion of the ψ_n for $n \in [1 \,..\, N]$ that are nonzero.

Derive explicit bounds on the error term $M_n - cK^n$.

4.10 Multiple singularities

There are a few situations where collecting contributions from several polar singularities proves useful in analyzing coefficients of generating functions. First, in the presence of multiple singularities on the circle of convergence of a series, several geometric terms of the form ζ^n sharing the same modulus combine. In simpler cases, such terms induce a periodic behaviour for coefficients that is easy to describe; in the more general case, fluctuations of a somewhat "arithmetic nature" result. Finally, consideration of *all* singularities (whether dominant or not) of a meromorphic functions may lead to explicit summations expressing their coefficients.

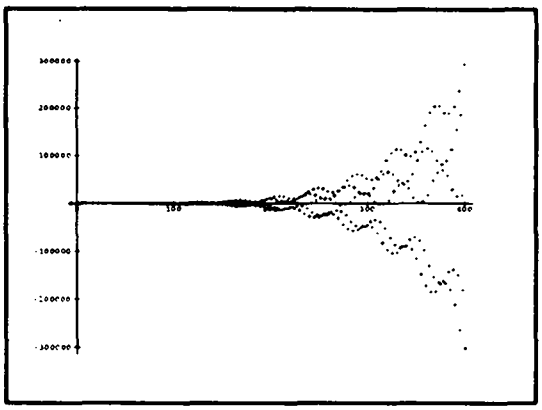

Figure 4.4: The coefficients $[z^n]f(z)$, where $f(z) = (1+1.02z^4)^{-3}(1-1.05z^5)^{-1}$ illustrate a periodic superposition of smooth behaviours that depend on the residue class of n modulo 20.

Periodicities. When several singularities of $f(z)$ have the same modulus, they may induce complete cancellations, so that different regimes will be present in the coefficients of f. For instance

$$\frac{1}{1+z^2} = 1 - z^2 + z^4 - z^6 + z^8 - \cdots, \quad \frac{1}{1-z^3} = 1 + z^3 + z^6 + z^9 + \cdots,$$

exhibit patterns of periods 4 and 3 respectively, this corresponding to roots of unity or order 4 ($\pm i$), and 3. Accordingly,

$$\phi(z) = \frac{1}{1+z^2} + \frac{1}{1-z^3} = \frac{2 - z^2 + z^3 + z^4 + z^8 + z^9 - z^{10}}{1-z^{12}}$$

has a pattern of period 12, and the coefficients ϕ_n such that $n \equiv 1, 5, 6, 7, 11$ modulo 12 are zero. Consequently, if we analyze

$$[z^n]\psi(z) \qquad \text{where} \qquad \psi(z) = \phi(z) + \frac{1}{1-z/2},$$

we see that a different exponential growth manifests itself when n is taken congruent to $1, 5, 6, 7, 11$ mod 12. In many combinatorial applications, generating functions involving periodicities can be decomposed "at sight", and the corresponding asymptotic subproblems generated are then solved separately.

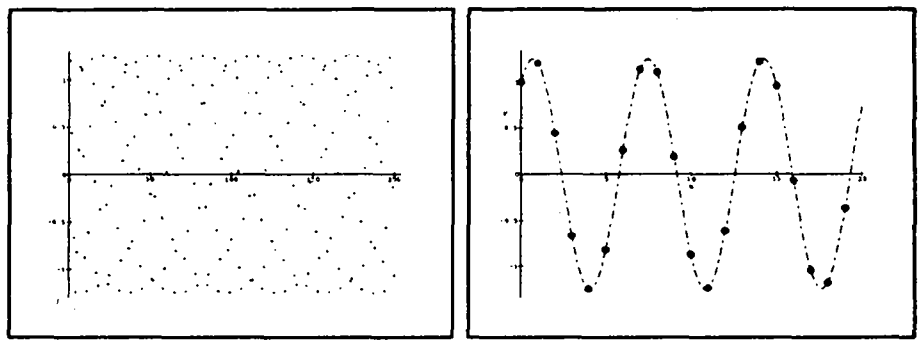

Figure 4.5: The coefficients of $f = 1/(1 - \frac{6}{5}z + z^2)$ exhibit an apparently chaotic behaviour (left) which in fact corresponds to a discrete sampling of a sine function (right) reflecting the presence of two conjugate complex poles.

EXERCISE 19. Show that, given a polynomial $p(z) \in \mathbb{Q}[z]$, it is decidable whether one of its roots is a root of unity or has an argument that is commensurate with π. Implement such an algorithm in a computer algebra system. [Hint: Use resultants. A complete discussion of this and related issues is given in [4].]

Fluctuations. Take the polynomial $D(z) = 1 - \frac{6}{5}z + z^2$, whose roots are

$$\zeta = \frac{3}{5} + i\frac{4}{5}, \quad \bar{\zeta} = \frac{3}{5} - i\frac{4}{5},$$

both of modulus 1 (the numbers $3, 4, 5$ form a Pythagorean triple!), with argument $\pm\theta$ where $\theta = \arctan(\frac{4}{3}) = 0.9279$. The expansion of the function $f(z) = 1/D(z)$ starts as

$$\frac{1}{1 - \frac{6}{5}z + z^2} = 1 + \frac{6}{5}z + \frac{11}{25}z^2 - \frac{84}{125}z^3 - \frac{779}{625}z^4 - \frac{2574}{3125}z^5 + + \cdots$$

the sign sequence being

$$+++---+++++---+++----+++----+++---,$$

which indicates a partly irregular fluctuating behaviour.

The exact form of the coefficients of f results from a partial fraction expansion:

$$f(z) = \frac{a}{1 - z/\zeta} + \frac{b}{1 - z/\bar{\zeta}} \qquad \text{with } a = \frac{1}{2} + \frac{3}{8}i,\ b = \frac{1}{2} - \frac{3}{8}i.$$

Accordingly,

$$\begin{aligned} f_n &= ae^{-in\theta_0} + be^{in\theta_0} \\ &= \frac{\sin((n+1)\theta_0)}{\sin(\theta_0)}. \end{aligned}$$

This explains the sign changes observed. Since the angle θ_0 is not commensurate with π, the coefficients fluctuate but, unlike our earlier examples, no straightforward periodicity is present.

EXERCISE 20. Show that $\limsup f_n = \frac{5}{3}$, $\liminf f_n = -\frac{5}{3}$, that there are approximately as many positive and negative terms in the sequence f_n, and that the number of sign changes in the first N terms of the sequence f_n is asymptotic to $\frac{N\theta_0}{\pi}$. [Hint: the sequence defined by the fractional part $\{n\theta_0\}$ is uniformly distributed modulo 1 according to Dirichlet's theorem]

EXERCISE 21. We have

$$\frac{1}{1-z+z^3} = 1+z+z^2-z^4-2z^5-2z^6-z^7+z^8+3z^9+4z^{10}+3z^{11}-4z^{13}-7z^{14}-\ldots.$$

The sign pattern of coefficients starts like

$$+^3 0^1 -^4 +^4 0^1 -^4 +^4 -^5 +^4 -^5 +^4 -^5 +^4 -^5 +^4 -^5 +^4 \ldots$$

Is this sign pattern eventually periodic? [Hint: the arguments of the complex poles are ± 0.7038, not too different from $\pm\frac{2\pi}{9}$, which "explains" the quasi-regularity observed on initial values.]

Describe more of the fine structure of sign changes in this sequence.

Complicated problems of a more arithmetical nature may occur if several such singularities with non-commensurable arguments combine, and some open problem remain in the analysis of linear recurring sequences. (For instance no decision procedure is known to determine whether such a sequence ever vanishes.) Fortunately, such problems occur infrequently in combinatorial enumerations where zeros of rational functions tend to have a simple geometry.

EXERCISE 22. Consider the sequence

$$u_n = 1 - \cos(n) + \frac{1}{2^n}.$$

Show that it satisfies a linear recurrence of order 4 and determine its OGF.

Observe the sign pattern and the local minima of u_n experimentally. For instance $u_{112} = .54403 < u_{113} = .00473 > u_{114} = .38047$. State a plausible number-theoretic hypothesis that would imply $u_n > 0$ eventually. [Hint: π is very well approximated by the fraction $\frac{355}{113}$.]

Exact formulæ. The error terms appearing in the asymptotic expansion of coefficients of meromorphic functions are already exponentially small. By "pealing off" the singularities of a meromorphic function by layers in order of increasing modulus, we may be lead to extremely precise expansions for the coefficients.

This is the case for the Bernoulli numbers B_n, the surjection numbers R_n, the Secant numbers E_{2n} and the Tangent numbers E_{2n+1} defined by

$$\begin{aligned}
\sum_{n=0}^{\infty} B_n \frac{z^n}{n!} &= \frac{z}{e^z - 1} && \text{(Bernoulli numbers)}\\
\sum_{n=0}^{\infty} R_n \frac{z^n}{n!} &= \frac{1}{2 - e^z} && \text{(Surjection numbers)}\\
\sum_{n=0}^{\infty} E_{2n} \frac{z^{2n}}{(2n)!} &= \frac{1}{\cos(z)} && \text{(Secant numbers)}\\
\sum_{n=0}^{\infty} E_{2n+1} \frac{z^{2n+1}}{(2n+1)!} &= \tan(z) && \text{(Tangent numbers).}
\end{aligned}$$

The case of the Bernoulli numbers connects us with the Riemann ζ function whose properties will be needed later when we discuss Mellin transforms. The GF $z/(e^z - 1)$ has poles at the points $\chi_k = 2ik\pi$, with $k \in \mathbb{Z} \setminus \{0\}$. The residue at χ_k is equal to χ_k,

$$\frac{z}{e^z - 1} \sim \frac{\chi_k}{z - \chi_k} \qquad (z \to \chi_k).$$

The expansion theorem for meromorphic functions is applicable here. To see it use the Cauchy integral formula, and proceed as in the proof of Theorem 4.6, using as external contours large circles that pass half way between poles. Along these contours, the integrand tends to 0 because of the Cauchy "kernel" z^{-n-1}. In the limit, the coefficient integral is thus the sum of all residues of the meromorphic function over the whole of the complex plane.

From this argument, we thus get:

$$\frac{B_n}{n!} = -\sum_{k\in\mathbb{Z}\setminus\{0\}} \lambda_k^{-n}.$$

This proves that $B_n = 0$ if n is odd. If n is even, then grouping terms two by two, we get

$$\frac{B_{2n}}{(2n)!} = (-1)^{n-1}2^{1-2n}\pi^{-2n}\sum_{k=0}^{\infty}\frac{1}{k^{2n}}.$$

Using more standard notations, we have thus established that

$$\zeta(2n) = (-1)^{n-1}2^{2n-1}\pi^{2n}\frac{B_{2n}}{(2n)!} \quad \text{where } \zeta(s) = \sum_{k=1}^{\infty}\frac{1}{k^s} \text{ and } B_n = n![z^n]\frac{z}{e^z-1}.$$

In the same vein, the surjection numbers have as EGF $R(z) = (2-e^z)^{-1}$ with simple poles at

$$\chi_k = \log 2 + 2ik\pi \qquad \text{where} \qquad R(z) \sim \frac{1}{2}\frac{1}{\chi_k - z}.$$

Since $R(z)$ stays bounded on circles passing half way in between poles, we find the exact formula,

$$\frac{R_n}{n!} = \frac{1}{2}\sum_{k\in\mathbb{Z}}\chi_k^{-n-1}.$$

A variant form is

$$\frac{R_n}{n!} = \frac{1}{2}\left(\frac{1}{\log 2}\right)^{n+1} + \sum_{k=1}^{\infty}\frac{\cos((n+1)\theta_k)}{(\log^2 2 + 4k^2\pi^2)^{(n+1)/2}} \quad \text{with } \theta_k = \arctan\left(\frac{2k\pi}{\log 2}\right),$$

which shows the hidden occurrence of infinitely many "harmonics" of fast decaying amplitude.

EXERCISE 23. Determine the corresponding expansion for the tangent and secant numbers E_n.

Compute

$$\sum_{k=1}^{\infty}\frac{(-1)^k}{(2k+1)^s},$$

for $s = 1, 3, 5, 7, \ldots$. [Hint: Analyze $[z^n](e^z+1)^{-1}$.]

4.11 Localization of zeros and poles

We gather here a few results that often prove useful in determining the location of zeros of analytic functions, and hence of poles of meromorphic functions. A detailed treatment of this topic may be found in Henrici's book [5].

Let $f(z)$ be an analytic function in a simply connected open set Ω and let γ be a simple closed curve inside Ω on which f is assumed to have no zeros. We claim that the quantity

$$N(f;\gamma) = \frac{1}{2i\pi}\int_\gamma \frac{f'(z)}{f(z)}\,dz$$

exactly equals the number of zeros of f inside γ. The reason is that the function f'/f has its poles exactly at the zeros of f, and its residue at each pole is 1, so that the assertion results from the residue theorem

Since a primitive of f'/f is $\log f$, the integral also represents $[\log f]_\gamma$ which is the variation of $\log f$ along γ. The variation $[\log f]_\gamma$ reduces to i times the variation of the argument of f along γ as $\log(re^{i\theta}) = \log r + i\theta$ and the modulus r does not vary along the closed contour. This quantity is precisely equal to the number of times the transformed contour $f(\gamma)$ winds about the origin. This constitutes the "Principle of the Argument":

> *The number of zeros of $f(z)$ (counted with multiplicities) inside γ equals the winding number of the transformed contour $f(\gamma)$ around the origin.*

A similar proof shows that when f is meromorphic, then $N(f;\gamma)$ equals the difference between the number of zeros and the number of poles.

By similar devices, we get Rouché's theorem:

> *Assume that in the closed domain delimited by the interior part of γ, the functions $f(z)$ and $g(z)$ are analytic and satisfy $|g(z)| < |f(z)|$. Then $f(z)$ and $f(z)+g(z)$ have the same number of zeros there.*

The meaning of Rouché's theorem is easily grasped: since $|g| < |f|$, then $f(\gamma)$ and $(f+g)(\gamma)$ should have the same winding number.

> EXERCISE 24. Under the hypothesis of Rouché's theorem show that $h(z) = (f(z)+g(z))/f(z)$ has as many zeros as poles inside γ by estimating $N(h;\gamma)$ that is an integer. Deduce the conclusion of the theorem.

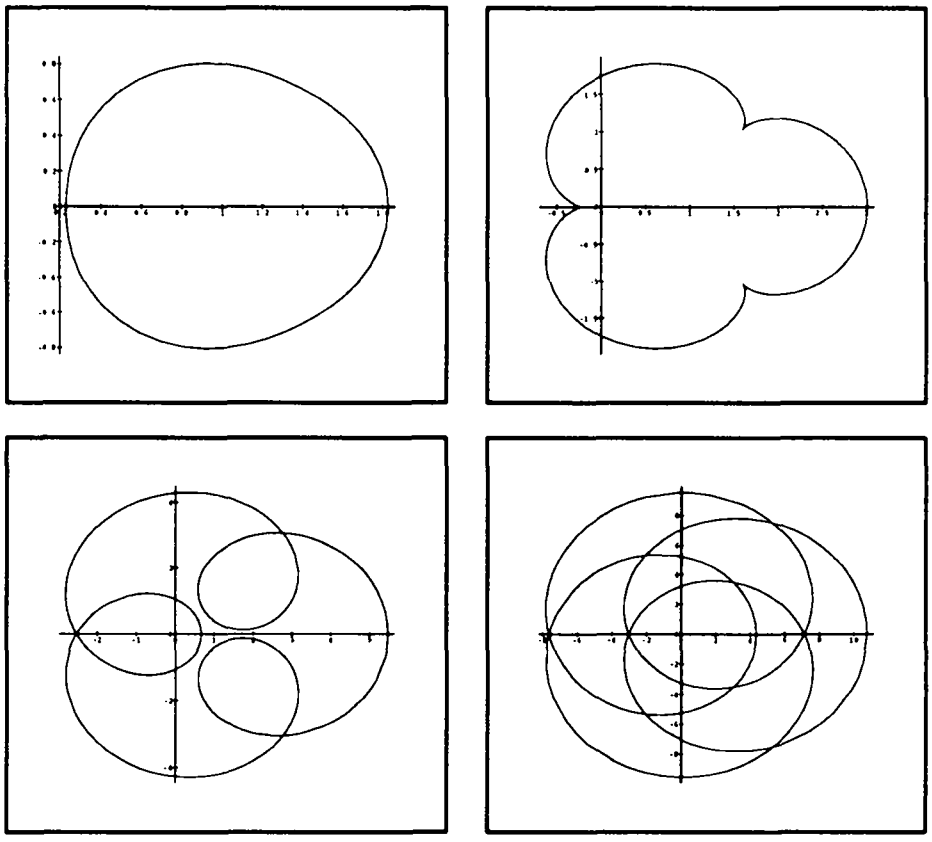

Figure 4.6: The transforms of $\gamma_j = \{|z| = \frac{4j}{10}\}$ by $P_4(z) = 1 - 2z + z^4$, for $j = 1, 2, 3, 4$, demonstrate that $P_4(z)$ has no zero inside $|z| < 0.4$, one zero inside $|z| < 0.8$, two zeros inside $|z| < 1.2$ and four zeros inside $|z| < 1.6$. The actual zeros are at $\rho_4 = 0.54368$, 1 and 1.11514 ± 0.77184.

These principles form the basis of numerical algorithms for locating zeros of analytic functions. Such algorithms can even acquire the status of full proofs if one operates carefully with guaranteed precision routines.

As an illustration of these ideas, we reexamine the longest run problem that involves finding the dominant poles and coefficients of the generating function

$$f(z) = \frac{1}{P_k(z)} \qquad \text{where} \qquad P_k(z) = 1 - 2z + z^k.$$

Consider the case $k \geq 4$. The polynomial $P_k(z)$ has a real root ρ_k between $\frac{1}{2}$ and $\frac{3}{4}$. By Rouché's theorem applied on $|z| = \frac{3}{4}$, $P_k(z)$ admits a unique zero in $|z| \leq \frac{3}{4}$ which therefore coincides with ρ_k. Therefore, the dominant pole of f has been isolated. (It is not hard to show that $\rho_k \to \frac{1}{2}$.)

Furthermore, effective remainder terms may be obtained. On $|z| = \frac{3}{4}$, one has trivially $|P_k(z)| < 4$. Evaluating $[z^n]$ by Cauchy's coefficient formula with the circle $|z| = \frac{3}{4}$, we find that

$$[z^n]\frac{1}{1 - 2z + z^k} = \frac{-1}{\rho_k P_k'(\rho_k)}\left(\frac{1}{\rho_k}\right)^n + Q \qquad \text{with} \qquad |Q| < 4\left(\frac{3}{4}\right)^n.$$

It is then a simple matter to complete a detailed analysis by means of the estimates

$$\rho_k = 1 - 2^{1-k} + o(k2^{-2k}), \quad P_k'(\rho_k) = -1 + O(2^{-k}).$$

From there it results easily that the longest run in a random binary string of size n has expected length $\log_2 n + O(1)$.

EXERCISE 25. Establish precise estimates for ρ_k and $P'(\rho_k)$ when k gets large. Prove the $\log_2 n + O(1)$ result mentioned in the text [7].

4.12 Notes

Given a generating function, valuable estimates incorporating the essential exponential growth are simply obtained from the location of dominant singularities. The method of exponential bounds applies to many function even if they are only defined implicitly through a functional equation.

In the case of meromorphic functions, very precise coefficients estimates normally result from a dominant singularity analysis, the error terms being

exponentially small. Also, only the main term of an asymptotic expansion near a dominant singularity is required by this method.

Such analyses constitute a first illustration of a general principle: *A function's singularities contain all the asymptotic information on the function's coefficients.* The next chapter will show that singularities more general than mere poles can also be treated in a synthetic way.

Bibliography. There are many excellent books treating complex analysis and function theory. References most relevant to the discussion given in this chapter are the books of Titchmarsh [15] (oriented towards classical analysis), Whitaker and Watson [16] (with emphasis on special functions), Dieudonné [2] and Knopp [6]. Henrici [5] presents complex analysis under the perspective of constructive methods, a valuable point of view here.

References dealing specifically with asymptotic analysis are discussed at the end of the next chapter.

Problems and Exercises

Complex analysis and residue computations are useful in the evaluation of sums and definite integrals. A clear exposition is to be found in Lindelöf's book [9].

EXERCISE 26. Under simple conditions on the analytic function f, deduce Plana's complex variables version of the Euler–Maclaurin summation formula:

$$\sum_{n=0}^{\infty} f(n) = \frac{1}{2}f(0) + \int_0^{\infty} f(x)\,dx + \int_0^{\infty} \frac{f(iy) - f(-iy)}{e^{2i\pi y} - 1}\,dy.$$

[Hint. See [5, Vol. 1, p. 274].]

EXERCISE 27. State sufficient conditions on the analytic function $a(z)$ so as to ensure the validity of the integral representation

$$\sum_{k=k_0}^{\infty} (-1)^k a(k) = \frac{1}{2i\pi} \int_{k_0-1/2-i\infty}^{k_0-1/2+i\infty} a(s)\,\frac{\pi\,ds}{\sin \pi s}.$$

Show by means of a suitable integral formula that the function

$$F(z) = \sum_{k=0}^{\infty} \frac{(-1)^k}{k^2+1} z^k$$

is analytically continuable outside of its disk of convergence.

EXERCISE 28. Show that

$$f(z) = \frac{1}{2i\pi} \int_{\gamma} f(\zeta)\,\frac{d\zeta}{\zeta - z}.$$

where γ is a simple loop around z inside a suitable domain of analyticity of $f(z)$. Rederive Cauchy's coefficient formula from this expansion.

EXERCISE 29. The sum of the roots of the equation $g(y) = 0$ interior to γ equals

$$\frac{1}{2i\pi} \int_{\gamma} \frac{g'(y)}{g(y)}\,y\,dy.$$

Let $F(z, y)$ be an analytic function in both z and y (i.e., it admits a convergent series expansion). If $F'_y(z_0, y_0) \neq 0$, then the function $y(z)$ implicitly defined by $F(z, y) = 0$ and such that $y(z_0) = y_0$ is given by

$$y(z) = \frac{1}{2i\pi} \int_\gamma \frac{F'_y(z, y)}{F(z, y)} \, y \, dy,$$

where γ is a small loop around y_0. Deduce that $y(z)$ is analytic at z_0.

EXERCISE 30. Let $a(z)$ be analytic for $z \geq k_0$ and of polynomial growth in a right half plane. Then

$$\sum_{k=k_0}^{n} \binom{n}{k} (-1)^{n-k} a(k) = \frac{1}{2i\pi} \int_\gamma a(s) \frac{n! \, ds}{s(s-1)(s-2)\cdots(s-n)}.$$

Show that the sum

$$S_n = \sum_{k=1}^{n} \binom{n}{k} \frac{(-1)^k}{k^2+1}$$

can be estimated by residues, and deduce that it oscillates boundedly as $n \to +\infty$.

[This technique is a classical one in the calculus of finite differences. In computer science it is known as the method of "Rice's integrals" and it is used in some analyses of digital trees.]

Rational and meromorphic functions are useful in the analysis of many combinatorial problems.

EXERCISE 31. Consider the $2n$ points of the integer interval $[1 \,.\,.\, 2n]$. A pairing is an undirected graph such that all vertices have degree exactly 1. With edges drawn as semi-circles, the width of a pairing is the maximal number of edges met by a vertical line. The OGF of pairings of width $\leq h$ is

$$P^{[h]}(z) = \cfrac{1}{1 - \cfrac{1z^2}{1 - \cfrac{2z^2}{\ddots \, \cfrac{}{1 - hz^2}}}}.$$

Work out the asymptotics of the coefficients of $P^{[h]}(z)$ for small h.

[Note: This is based on [8].]

EXERCISE 32. From the rational generating functions involved, deduce that the expected height of a general plane tree lies between $O(n^{1/2-\epsilon})$ and $O(n^{1/2+\epsilon})$.

EXERCISE 33. A fountain of coins is an arrangement of n coins in rows such that the coins in the first row form a single contiguous block , and that in all higher rows each coin touches exactly two coins from the row beneath it [17, p. 35]. The OGF of fountains counted by the number of rows is

$$F(z) = \cfrac{1}{1 - \cfrac{z}{1 - \cfrac{z^2}{1 - \cfrac{z^3}{\cdots}}}}.$$

Work out precise asymptotics for $[z^n]f(z)$.

Bibliography

[1] BENDER, E. A. Central and local limit theorems applied to asymptotic enumeration. *Journal of Combinatorial Theory 15* (1973), 91–111.

[2] DIEUDONNÉ, J. *Calcul Infinitésimal.* Hermann, Paris, 1968.

[3] FELLER, W. *An Introduction to Probability Theory and its Applications*, third ed., vol. 1. John Wiley, 1968.

[4] GOURDON, X., AND SALVY, B. Asymptotics of linear recurrences with rational coefficients. Tech. Rep. 1887, INRIA, Mar. 1993. To appear in Proceedings FPACS'93.

[5] HENRICI, P. *Applied and Computational Complex Analysis.* John Wiley, New York, 1977. 3 volumes.

[6] KNOPP, K. *Theory of Functions.* Dover Publications, New York, 1945.

[7] KNUTH, D. E. The average time for carry propagation. *Indagationes Mathematicae 40* (1978), 238–242.

[8] LAGARIAS, J. C., ODLYZKO, A. M., AND ZAGIER, D. B. On the capacity of disjointly shared networks. *Computer Netwoks 10*, 5 (1985), 275–285.

[9] LINDELÖF, E. Le calcul des résidus et ses applications à la théorie des fonctions. In *Collection de monographies sur la théorie des fonctions, publiée sous la direction de M. Émile Borel.* Gauthier-Villars, Paris, 1905. Reprinted by Gabay, Paris, 1989.

[10] MEIR, A., AND MOON, J. W. On the altitude of nodes in random trees. *Canadian Journal of Mathematics 30* (1978), 997–1015.

[11] ODLYZKO, A. M. Periodic oscillations of coefficients of power series that satisfy functional equations. *Advances in Mathematics 44* (1982), 180–205.

[12] ODLYZKO, A. M. Asymptotic enumeration methods. Preprint, Mar. 1992. To appear as a chapter in the *Handbook of Combinatorics*, R. Graham, M. Grötschel and L. Lovász, Ed.

[13] PÓLYA, G., AND READ, R. C. *Combinatorial Enumeration of Groups, Graphs and Chemical Compounds.* Springer Verlag, New York, 1987.

[14] SHEPP, L. A., AND LLOYD, S. P. Ordered cycle lengths in a random permutation. *Transactions of the American Mathematical Society 121* (1966), 340–357.

[15] TITCHMARSH, E. C. *The Theory of Functions*, second ed. Oxford University Press, 1939.

[16] WHITTAKER, E. T., AND WATSON, G. N. *A Course of Modern Analysis*, fourth ed. Cambridge University Press, 1927. Reprinted 1973.

[17] WILF, H. S. *Generatingfunctionology.* Academic Press, 1990.

Chapter 5

Singularity Analysis of Generating Functions

Es ist eine Tatsache, daß die genauere Kenntnis
des Verhaltens einer analytischen Funktion
in der Nähe ihrer singulären Stellen
eine Quelle von arithmetischen Sätzen ist.

— ERICH HECKE [9, Kap. VIII]

A function's singularities are reflected in the function's coefficients. For rational fractions and meromorphic functions, the local analysis of polar singularities provides contributions to coefficients in the form of products of polynomials and simple exponentials.

In this chapter, we present a general approach to singularity analysis of generating functions that is no longer restricted to polar singularities and extends to any function of moderate growth or decay at its dominant singularities. The basic principle is the existence of a *correspondence* between

the asymptotic expansion of a function near its dominant singularities
and
the asymptotic expansion of the function's coefficients.

This mapping preserves orders of growth in the sense that larger functions have larger coefficients.

The method of singularity analysis applies to "*algebraic-logarithmic*" functions whose singular expansions involve fractional powers and logarithms. It relies on two types of results: first, a *catalogue* of coefficients of standard functions occurring in such singular expansions so that coefficients of the

main terms can be extracted; next, suitable *transfer theorems* that allow to extract the asymptotic order of coefficients of error terms in singular expansions.

The developments are based on Cauchy's coefficient formula used in conjunction with special contours of integration known as Hankel contours. The contours come very close to the singularities then steer away; by design, they have the property of capturing essential asymptotic informations contained in the functions' singularities.

An important feature of the method is to require only local asymptotic properties on the part of the function to be analyzed. In this way, it often applies to functions only indirectly accessible through functional equations.

The method of singularity analysis allows to treat various tree models where singularities of the square-root type invariably occur. It applies also to search trees of various sorts and to sorting algorithms whose analysis (see later chapters) often involves logarithmic factors.

5.1 Introduction

Rational and meromorphic functions have coefficients whose asymptotic form involves "exponential polynomials",

$$\left(\frac{1}{\rho}\right)^n n^{k-1},$$

with k a positive integer. This reflects the nature of polar singularities, with corresponding elements of the form

$$\frac{1}{(1-\frac{z}{\rho})^k},$$

for the function itself.

We examine here a class of methods that yield a wider range of subexponential factors than the n^k that arise in meromorphic functions. The method, called singularity analysis, is capable of providing asymptotic forms of the type

$$\left(\frac{1}{\rho}\right)^n n^{\alpha-1}(\log n)^\beta,$$

for coefficients, with α and β being arbitrary real (or even complex!) numbers. Such forms relate to singularities of a more complicated nature than

mere poles where the function may involve elements of the form

$$\frac{1}{(1-\frac{z}{\rho})^{\alpha}}\left(\log\frac{1}{1-\frac{z}{\rho}}\right)^{\beta}.$$

For k an integer, the expansion

$$(1-z)^{-k}=\sum_{n=0}^{\infty}\binom{n+k-1}{n}z^n$$

immediately gives the asymptotic form of the coefficients involved,

$$\begin{aligned}[z^n](1-z)^{-k} &= \binom{n+k-1}{k-1}\\ &= \frac{(n+1)(n+2)\cdots(n+k-1)}{(k-1)!}\\ &= \frac{n^{k-1}}{(k-1)!}\left(1+\mathcal{O}(\frac{1}{n})\right).\end{aligned} \tag{5.1}$$

For general α, it is therefore natural to expect

$$\begin{aligned}[z^n](1-z)^{-\alpha} &= \binom{n+\alpha-1}{\alpha-1}\\ &= \frac{n^{\alpha-1}}{(\alpha-1)!}\left(1+\mathcal{O}(\frac{1}{n})\right).\end{aligned} \tag{5.2}$$

It turns out that the asymptotic formula and even a full asymptotic expansion are valid (see Theorem 5.3) for real or complex α, provided we interpret $(\alpha-1)!$ suitably. It is true that

$$[z^n](1-z)^{-\alpha}\sim\frac{n^{\alpha-1}}{\Gamma(\alpha)}\left(1+\frac{\alpha(\alpha-1)}{2n}+\cdots\right), \tag{5.3}$$

where $\Gamma(\alpha)$ is the Euler Gamma function that coincides with $(\alpha-1)!$ whenever α is an integer.

We observe already from the pair (5.1)–(5.2) that functions of the form $(1-z)^{-\alpha}$ that are larger at the singularity $z=1$ also have larger coefficients corresponding to larger values of α. The correspondence that this observation suggests is very general as we are going to see throughout this chapter. As a straightforward illustration, we list a small sample of standard

functions admitting elementary expansions and taken in order of increasing growth.

$$
\begin{array}{llcll}
[z^n] & -\sqrt{1-z} & = & \frac{2}{n4^n}\binom{2n-2}{n-1} & \sim \frac{1}{2\sqrt{\pi n^3}} \\
[z^n] & \frac{1}{\sqrt{1-z}} & = & \frac{1}{4^n}\binom{2n}{n} & \sim \frac{1}{\sqrt{\pi n}} \\
[z^n] & \frac{1}{1-z} & = & 1 & \sim 1 \\
[z^n] & \frac{1}{1-z}\log\frac{1}{1-z} & = & H_n & \sim \log n \\
[z^n] & \frac{1}{(1-z)^2} & = & n+1 & \sim n.
\end{array}
$$

It is convenient to consider functions $f(z)$ that are singular at $z = 1$, a restriction that entails no loss of generality: if $f(z)$ is singular at $z = \rho$ and $g(z) = f(z/\rho)$, then by the scaling rule of Taylor expansions

$$[z^n]\, f(z) = \rho^n [z^n]\, f(\frac{z}{\rho}) = \rho^n [z^n]\, g(z),$$

where $g(z)$ is singular at $z = 1$. This is also in accordance with developments of the previous chapter, as the location of the dominant singularities always induces a multiplicative exponential factor for coefficients.

An asymptotic expansion of $f(z)$ around $z = 1$ is of the form

$$f(z) = \sigma(z) + \mathcal{O}(\tau(z)) \quad \text{where} \quad \sigma(z) \gg \tau(z) \quad \text{as} \quad z \to 1, \tag{5.4}$$

with σ and τ belonging to an asymptotic scale of standard functions like the collection $\{(1-z)^{-\alpha}\}_{\alpha\in\mathbb{R}}$ in simpler cases.

Taking formally Taylor coefficients in the expansion (5.4), we arrive at

$$f_n \equiv [z^n]f(z) = [z^n]\sigma(z) + [z^n]\mathcal{O}(\tau(z)).$$

Therefore, in order to extract asymptotic informations on the coefficients of $f(z)$, two ingredients are needed:

(i). A catalogue of exact or asymptotic forms for coefficients of standard singular functions $\sigma(z)$;

(ii). A way of extracting coefficients of functions known only by their order of growth around the singularity.

The first aspect is achieved by expansions of the type (5.3). The second aspect is achieved by transfer lemmas which under suitable conditions, essentially conditions of analytic continuation, guarantee that

$$[z^n]\mathcal{O}(\tau(z)) = \mathcal{O}([z^n]\tau(z)),$$

a relation which is much less trivial than its symbolic form would seem to imply.

In summary, under favourable conditions, we have the implication

$$f(z) = \sigma(z) + \mathcal{O}(\tau(z)) \qquad \Longrightarrow \qquad f_n = \sigma_n + \mathcal{O}(\tau_n). \tag{5.5}$$

As an illustration, consider the function

$$f(z) = \frac{e^{-z-z^2/2}}{\sqrt{1-z}},$$

which is the EGF of 2–regular graphs (or equivalently, "clouds", see [2]). Singularity analysis permits us to reason as follows. The function $f(z)$ is only singular at $z = 1$ where it has a branch point. Expanding the numerator around $z = 1$, we have

$$f(z) = \frac{e^{-3/4}}{\sqrt{1-z}} + e^{-3/4}(1-z)^{1/2} + \mathcal{O}((1-z)^{5/2}). \tag{5.6}$$

Therefore (see Theorems 5.2 and 5.4), translating formally term–by–term:

$$\begin{aligned} [z^n]f(z) &= e^{-3/4}\binom{n-1/2}{n} + e^{-3/4}\binom{n-3/2}{n} + O\binom{n-5/2}{n} \\ &= \frac{e^{-3/4}}{\sqrt{\pi n}} - \frac{2e^{-3/4}}{\sqrt{\pi n^3}} + \mathcal{O}(n^{-5/2}). \end{aligned} \tag{5.7}$$

The process of singularity analysis thus parallels the analysis of coefficients of rational and meromorphic functions presented in the previous chapter. In the latter case, $\sigma(z)$ was essentially restricted to be a partial fraction element of the form $(1-z)^{-k}$ for some integer k and $\tau(z)$ was required to be either a partial element of smaller growth (the case of rational functions) or an element analytic at the dominant singularity of $f(z)$ (the case of meromorphic functions). The range of singular behaviours taken into account by singularity analysis is considerably larger. We allow here functions from the scale

$$\frac{1}{(1-z)^\alpha}(\log\frac{1}{1-z})^\beta \qquad (z \to 1),$$

which, for coefficients, induce subexponential factors of the form

$$\theta(n) = n^{\alpha-1}(\log n)^{\beta}.$$

Even iterated logarithms (log log's) or other exotic functions can be encapsulated in the method.

This chapter is largely based on the theory developed by Flajolet and Odlyzko [5] and called *singularity analysis*. Technically it relies on a systematic use of Hankel contours in Cauchy coefficient integrals. Hankel contours serve first to express the Gamma function, then to estimate coefficients of a standard scale of functions, and finally to prove transfer theorems for error terms . This is the basis of a process by which an asymptotic expansion of a function near a singularity is directly mapped to a matching asymptotic expansion of its coefficients.

5.2 The Gamma function

The formulæ of singularity analysis involve the *Gamma function* in an essential manner. The Gamma function extends to nonintegral arguments the factorial function and we collect in this section a few classical facts regarding it. Proofs are not difficult and they may be found in standard treatises like [10] or [17]. We first list the basic function–theoretic properties. Next we prove the Hankel contour representation that introduces a technique fundamental to singularity analysis. Last, we conclude with a few classical expansions also of use for later chapters.

Definition and basic properties. Euler introduced the Gamma function as

$$\Gamma(s) = \int_0^{\infty} e^{-t} t^{s-1}\, dt, \tag{5.8}$$

and the integral converges provided $\Re(s) > 0$. Through integration by parts, one immediately derives the basic functional equation of the Gamma function,

$$\Gamma(s+1) = s\Gamma(s). \tag{5.9}$$

Since $\Gamma(1) = 1$, we see that $\Gamma(n+1) = n!$. Thus, the Gamma function serves to extend the factorial function for non integer arguments.

It is important to observe from (5.9) that the Gamma function can be continued to the whole of $\mathbb{C}$ with the exception of poles at $0, -1, -2, \ldots$. As

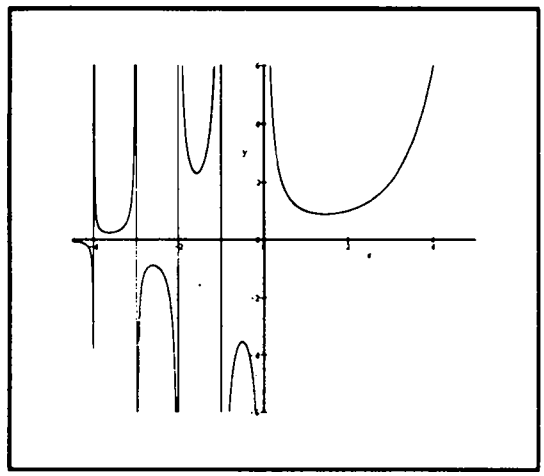

Figure 5.1: A plot of $\Gamma(s)$ for real s.

$s \to -m$, with m an integer, the functional equation used backwards yields

$$\Gamma(s) \sim \frac{(-1)^m}{m!} \frac{1}{s+m},$$

so that the residue of $\Gamma(s)$ at $s = -m$ is $(-1)^m/m!$. Figure 5.1 depicts the graph of $\Gamma(s)$ for real values of s.

Hankel contour representation. Euler's integral representation of $\Gamma(s)$ used in conjunction with the functional equation permits to continue $\Gamma(s)$ to the whole of the complex plane. A direct approach due to Hankel provides an alternative integral representation valid for all values of s.

Theorem 5.1 (Hankel's contour integral) *Let $\int_{+\infty}^{(0)}$ denote an integral taken along a contour starting at $+\infty$ in the upper plane, winding counter-clockwise around the origin, and proceeding towards $+\infty$ in the lower half plane. Then, for all $s \in \mathbb{C}$,*

$$\frac{1}{\Gamma(s)} = -\frac{1}{2i\pi} \int_{+\infty}^{(0)} (-t)^{-s} e^{-t}\, dt. \tag{5.10}$$

In (5.6), $(-t)^{-s}$ is assumed to have its principal determination when t is negative real; that determination is then extended uniquely by continuity along all of the contour.

Proof. We refer to volume 2 of Henrici's book [10, p. 35] or Whittaker and Watson's treatise [17, p. 245] for a detailed proof.

A contour of integration that fulfills the conditions of the theorem is typically the contour $\mathcal{H}$ that is at distance 1 of the positive real axis comprising three parts: a line parallel to the positive real axis in the upper half-plane; a connecting semi-circle centered at the origin; a line parallel to the positive real axis in the lower half-plane. More precisely, $\mathcal{H} = \mathcal{H}^- \cup \mathcal{H}^+ \cup \mathcal{H}^\circ$, where

$$\begin{cases} \mathcal{H}^- &= \{z = w - i,\ w \geq 0\} \\ \mathcal{H}^+ &= \{z = w + i,\ w \geq 0\} \\ \mathcal{H}^\circ &= \{z = -e^{i\phi},\ \phi \in [-\frac{\pi}{2}, \frac{\pi}{2}]\}. \end{cases} \tag{5.11}$$

Let ϵ be a small positive real number, and denote by $\epsilon \cdot \mathcal{H}$ the image of $\mathcal{H}$ by the transformation $z \mapsto \epsilon z$. By analyticity, for the integral representation, we can equally well adopt as integration path the contour $\epsilon \cdot \mathcal{H}$, for any $\epsilon > 0$. The main idea is then to let ϵ tend to 0.

Assume momentarily that $s < 0$. (The result for arbitrary s will follow by analytic continuation.) The integral along $\epsilon \cdot \mathcal{H}$ decomposes into three parts:

The integral along the semi-circle is 0 if we take the circle of a vanishing small radius, since $-s > 0$.

The contributions from the upper and lower lines give, as $\epsilon \to 0$

$$\int_{+\infty}^{(0)} (-t)^{-s} e^{-t}\, dt = (-U + L) \int_0^\infty t^{-s} e^{-t}\, dt$$

where U and L denote the determinations of $(-1)^{-s}$ on the rays lying in the upper and lower half planes respectively.

A simple reasoning by continuity convinces us that $U = (e^{-i\pi})^{-s}$ and $L = (e^{+i\pi})^{-s}$. Therefore, the right hand side of (5.10) is equal to

$$-\frac{(-e^{i\pi s} + e^{-i\pi s})}{2i\pi}\Gamma(1-s) = -\frac{\sin(\pi s)}{\pi}\Gamma(1-s)$$

which reduces to $1/\Gamma(s)$ by the complement formula for the Gamma function. □

Expansions. It is known that the Gamma function, while having poles at the nonpositive integers, has no zeros. Thus $1/\Gamma(s)$ is an entire function with zeros at $0, -1, \ldots$, the position of its zeros being reflected by the product decomposition,

$$\frac{1}{\Gamma(s)} = se^{\gamma s} \prod_{m=1}^{\infty} \left[(1 + \frac{s}{n})e^{-s/n}\right] \tag{5.12}$$

(of the so-called Weierstraß type). There $\gamma = 0.57721$ denotes Euler's constant

$$\gamma = \lim_{n\to\infty} (H_n - \log n) \equiv \sum_{n=1}^{\infty} \left[\frac{1}{n} - \log(1 + \frac{1}{n})\right].$$

The logarithmic derivative of the Gamma function is classically known as the psi function and is denoted by $\psi(s)$:

$$\psi(s) = \frac{d}{ds} \log \Gamma(s) = \frac{\Gamma'(s)}{\Gamma(s)}.$$

In accordance with (5.12), $\psi(s)$ admits a partial fraction decomposition

$$\psi(s+1) = -\gamma - \sum_{n=1}^{\infty} \left[\frac{1}{n+s} - \frac{1}{n}\right]. \tag{5.13}$$

From (5.13), there results that the Taylor expansion of $\psi(s+1)$, hence of $\Gamma(s+1)$, involves values of the Riemann zeta function,

$$\zeta(s) = \sum_{n=1}^{\infty} \frac{1}{n^s},$$

at the positive integers.

EXERCISE 1. Show that for $|s| < 1$,

$$\psi(s+1) = -\gamma + \sum_{n=2}^{\infty} (-1)^n \zeta(n) s^{n-1},$$

and deduce that the coefficients in the expansion of $\Gamma(s)$ around any integer are polynomially expressible in terms of Euler's constant γ and values of the zeta function at the integers. For instance,

$$\Gamma(s+1) = 1 - \gamma s + \left(\frac{\pi^2}{12} + \frac{\gamma^2}{2}\right) s^2 + \left(-\frac{\zeta(3)}{3} - \frac{\pi^2\gamma}{12} - \frac{\gamma^3}{6}\right) s^3 + \mathcal{O}(s^4).$$

Make the coefficients in this expansion explicit using the multinomial expansion.

Another direct consequence of the infinite product formulæ for $\Gamma(s)$ and $\sin \pi s$ is the complement formula for the Gamma function,

$$\Gamma(s)\Gamma(-s) = -\frac{\pi}{s \sin \pi s}, \tag{5.14}$$

which directly results from Euler's decomposition of the sine function,

$$\sin s = s \prod_{n=1}^{\infty} \left(1 - \frac{s^2}{n^2\pi^2}\right).$$

In particular, the complement formula entails the special value

$$\Gamma(\frac{1}{2}) = \sqrt{\pi}.$$

Finally, a famous asymptotic formula is Stirling's expansion

$$\Gamma(s+1) = s\Gamma(s) \sim s^s e^{-s}\sqrt{2\pi s}\left[1 + \frac{1}{12s} + \frac{1}{288s^2} - \frac{134}{51840s^4} + \cdots\right].$$

It is valid not only for real $s > 0$, but also for all $s \to \infty$ in $|\mathrm{Arg}(s)| < \pi$. For the purpose of obtaining effective bounds, the following quantitative relation [17, p. 253] often proves useful

$$\Gamma(s) = s^{s-1/2}e^{-s}(2\pi)^{1/2}e^{\theta/(12s)} \quad \text{where} \quad 0 < \theta < 1,$$

an equality that holds now for all positive s.

EXERCISE 2. Derive Stirling's formula for large s by applying Laplace's method to the integral

$$\int_0^\infty e^{-t}t^s\,dt \equiv \int_0^\infty e^{-t+s\log t}\,dt,$$

and by expanding near the maximum of the integrand at $t = s$. [See [2, p. 267] for an explicit form of the full expansion related to derangement numbers.]

EXERCISE 3. Derive Stirling's formula from Euler–Maclaurin summation applied to $\log\Gamma(s)$.

EXERCISE 4. Prove the duplication formula

$$2^{2s-1}\Gamma(s)\Gamma(s+\frac{1}{2}) = \pi^{1/2}\Gamma(2s),$$

and deduce the expansion of Γ near $1/2$:

$$\Gamma(s+\frac{1}{2}) = \pi^{1/2} - (\gamma + 2\log 2)\,\pi^{1/2}s + \left(\frac{\pi^{5/2}}{4} + \frac{(\gamma+2\log 2)^2\,\pi^{1/2}}{2}\right)s^2 + \mathcal{O}(s^3).$$

5.3 Asymptotics of standard coefficients

Returning to the binomial expansion, we have for general α,

$$[z^n](1-z)^{-\alpha} = (-1)^n\binom{-\alpha}{n} = \binom{n+\alpha-1}{n} = \frac{\alpha(\alpha+1)\cdots(\alpha+n-1)}{n!}.$$

This quantity is expressible in terms of Gamma functions, and

$$\binom{n+\alpha-1}{n} = \frac{\Gamma(n+\alpha)}{\Gamma(\alpha)\Gamma(n+1)},$$

provided α is neither 0 nor a negative integer. When $\alpha \in \{0, -1, \ldots\}$, the coefficients $\binom{n+\alpha-1}{n}$ eventually vanish, so that the asymptotic problem of estimating $[z^n](1-z)^{-\alpha}$ becomes void.

Analysis of the coefficients $\binom{n+\alpha-1}{n}$ to main terms can be carried out by means of Stirling's formula, which results in the estimate

$$\binom{n+\alpha-1}{n} = \frac{n^{\alpha-1}}{\Gamma(\alpha)}(1+\mathcal{O}(\frac{1}{n})).$$

However, a far more powerful method consists in analyzing these coefficients by means of Cauchy's coefficient formula. For us, this has the advantage of paving the way to the transfer theorems. Also, the complex analysis method readily extends to coefficients of functions involving logarithms or iterated logarithms.

EXERCISE 5. Establish that

$$[z^n](1-z)^{-\alpha} = \frac{n^{\alpha-1}}{\Gamma(\alpha)}(1+\mathcal{O}(\frac{1}{n}))$$

starting from Stirling's formula. Show in this way the existence of a full asymptotic expansion in descending powers of n.

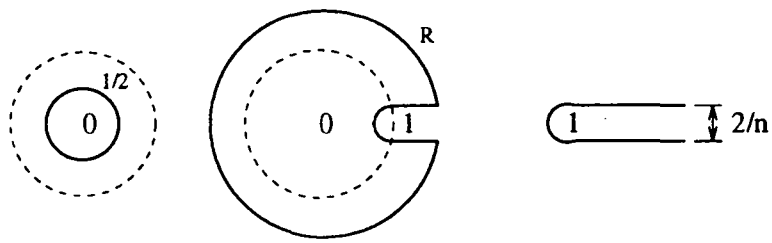

Figure 5.2: The contours $\mathcal{C}_0$, $\mathcal{C}_1$, and $\mathcal{C}_2 \equiv \mathcal{H}(n)$ used for estimating the coefficients of functions from the standard asymptotic scale.

Theorem 5.2 (Standard function scale) *Let α be a number not belonging to the set $\{0, -1, -2, \ldots\}$. The coefficient of z^n in*

$$f(z) = (1-z)^{-\alpha}$$

admits for large n a full asymptotic expansion in descending powers of n,

$$[z^n]f(z) \sim \frac{n^{\alpha-1}}{\Gamma(\alpha)}\left(1 + \sum_{k=1}^{\infty} \frac{e_k(\alpha)}{n^k}\right),$$

where $e_k(\alpha)$ is a polynomial in α of degree $2k$.

The polynomial $e_k(\alpha)$ turns out to be divisible by $\alpha(\alpha-1)\cdots(\alpha-k)$. In particular, we have

$$f_n = [z^n](1-z)^{-\alpha} \sim \frac{n^{\alpha-1}}{\Gamma(\alpha)}\Bigg(1 + \frac{\alpha(\alpha-1)}{2n} + \frac{\alpha(\alpha-1)(\alpha-2)(3\alpha-1)}{24n^2} + \frac{\alpha^2(\alpha-1)^2(\alpha-2)(\alpha-3)}{48n^3} + \cdots\Bigg). \tag{5.15}$$

Proof. First the coefficient $[z^n](1-z)^{-\alpha}$ is expressed by means of Cauchy's coefficient formula,

$$f_n = \frac{1}{2i\pi}\int_{\mathcal{C}} (1-z)^{-\alpha}\,\frac{dz}{z^{n+1}}, \tag{5.16}$$

with C a small enough contour that encircles the origin, for instance the positively oriented circle $C_0 = \{z,\ |z| = \frac{1}{2}\}$. Next this contour C_0 may be deformed into another one, C_1, consisting of a large circle of radius $R > 1$ with a notch that comes back near and to the left of $z = 1$. (In effect, any simple closed contour around the origin that does not cross the half-line $z \geq 1$ is adequate.) Since the integral along large circles decreases as $\mathcal{O}(R^{-n-\alpha})$, we can finally let R tend to infinity. We are then left with an integral representation for f_n where C is thus replaced by a contour C_2 that starts from $-\infty$ in the lower half plane, winds around 1 clockwise and ends at $+\infty$ in the upper half plane. This is a typical case of a Hankel contour.

To fully specify the integration path, we particularize C_2 to be the contour $\mathcal{H}(n)$ that passes at a distance $\frac{1}{n}$ from the half line $[1, +\infty[$:

$$\mathcal{H}(n) = \mathcal{H}^-(n) + \mathcal{H}^+(n) + \mathcal{H}^\circ(n) \tag{5.17}$$

where

$$\begin{cases} \mathcal{H}^-(n) &= \{z = w - \frac{i}{n},\ w \geq 1\} \\ \mathcal{H}^+(n) &= \{z = w + \frac{i}{n},\ w \geq 1\} \\ \mathcal{H}^\circ(n) &= \{z = 1 - \frac{e^{i\phi}}{n},\ \phi \in [-\frac{\pi}{2}, \frac{\pi}{2}]\}. \end{cases} \tag{5.18}$$

Now, a change of variable

$$z = 1 + \frac{t}{n} \tag{5.19}$$

in the integral (5.16) gives the form

$$f_n = \frac{n^{\alpha-1}}{2i\pi} \int_{\mathcal{H}} (-t)^{-\alpha} \left(1 + \frac{t}{n}\right)^{-n-1} dt \tag{5.20}$$

where $\mathcal{H}$ is exactly the Hankel contour encountered in the proof of Theorem 5.1.

We have

$$\left(1 + \frac{t}{n}\right)^{-n-1} = e^{-(n+1)\log(1+t/n)} = e^{-t}\left[1 + \frac{t^2 - 2t}{2n} + \frac{3t^4 - 20t^3 + 24t^2}{24n^2} + \cdots\right]. \tag{5.21}$$

Thus, the integrand in (5.20) converges pointwise (and uniformly in any bounded domain of the t plane) to $(-t)^{-\alpha}e^{-t}$ which is precisely the "kernel" that appears in Hankel's formula for the Gamma function. Substitution of the asymptotic form

$$(1 + \frac{t}{n})^{-n-1} = e^{-t}(1 + \mathcal{O}(\frac{1}{n})),$$

as $n \to \infty$ inside the integral (5.20) suggests that

$$[z^n](1-z)^{-\alpha} = \frac{n^{\alpha-1}}{\Gamma(\alpha)}(1 + \mathcal{O}(\frac{1}{n})).$$

Furthermore, the full expansion (5.21) when plugged into the integral (5.20) formally leads to an expansion in descending powers of n.

To complete the argument outlined in the previous paragraph, one then proceeds as follows:

(*i*) Split the contour according to $|t| \leq \log^2 n$ and $|t| \geq \log^2 n$. The part corresponding to $|t| \geq \log^2 n$ is negligible; for instance

$$(1 + \frac{t}{n})^{-n} = \mathcal{O}(\exp(-\log^2 n)).$$

(*ii*) On the remaining part of the contour, $|t| \leq \log^2 n$, the quantity $\frac{t}{n}$ is small enough, being of order $\frac{\log^2 n}{n}$, so that a terminating form of (5.21) may be developed to any predetermined order with uniform error terms.

These considerations justify a termwise integration of expansion (5.21) with the integral of (5.20).

The full expansion is then computed as follows. A term of the form $\frac{t^r}{n^r}$ in the expansion (5.21) induces, by Hankel's formula, a term of the form $\frac{1}{\Gamma(\alpha-r)}\frac{1}{n^r}$. The expansion so obtained is non degenerate provided α differs from a negative integer or zero. Since

$$\frac{1}{\Gamma(\alpha-k)} = \frac{1}{\Gamma(\alpha)}(\alpha-1)(\alpha-2)\cdots(\alpha-k).$$

the expansion in the statement of the theorem eventually follows. □

EXERCISE 6. Determine the first 12 polynomials $e_k(u)$ using a computer algebra system. Implement two algorithms: (*i*) an algorithms based on Theorem 5.2 and the corresponding expansions; (*ii*) an algorithms based on interpolation as the $e_k(\alpha)$ are computable directly for $\alpha = 1, 2, 3, \ldots$.

The basic principle underlying the method is simple. It consists in taking a contour of integration that comes close to the singularity at $z = 1$. By

choosing this contour to pass at distance $\frac{1}{n}$, the kernel in Cauchy's coefficient formula transforms into an exponential, while the function can be locally expanded, with the differential coefficient only introducing a rescaling factor of $1/n$:

$$\frac{1}{z^{n+1}} \mapsto e^{-t}, \quad (1-z)^{-\alpha} \mapsto n^{\alpha}(-t)^{-\alpha}, \quad dz \mapsto \frac{1}{n}dt.$$

In other words, the contour $\mathcal{H}(n)$ "captures" the behaviour of the function near its singularity, thereby enabling coefficient estimation.

This principle has the further advantage of generalizing to a wide class of singular functions, most notably the ones involving logarithmic terms, as well as leading to a whole range of transfers of $\mathcal{O}(.)$ and $o(.)$ terms, to be established in the next section.

Theorem 5.3 (Standard coefficient scale, logarithms) *Let α be a number not in $\{0, -1, -2, \ldots\}$. The coefficient of z^n in*

$$f(z) = (1-z)^{-\alpha}\left(\frac{1}{z}\log\frac{1}{1-z}\right)^{\beta}$$

admits for large n a full asymptotic expansion in descending powers of $\log n$,

$$f_n = [z^n]f(z) \sim \frac{n^{\alpha-1}}{\Gamma(\alpha)}(\log n)^{\beta}\left[1 + \frac{C_1}{1!}\frac{\beta}{\log n} + \frac{C_2}{2!}\frac{\beta(\beta-1)}{(\log n)^2} + \cdots\right]. \quad (5.22)$$

There, $C_k = C_k(\alpha)$ represents

$$\Gamma(\alpha)\frac{d^k}{ds^k}\left.\frac{1}{\Gamma(s)}\right|_{s=\alpha}.$$

A coefficient of $\frac{1}{z}$ is introduced in front of the logarithm since $\log(1-z)^{-1} = z + \mathcal{O}(z^2)$. In this way, $f(z)$ is a *bona fide* power series in z, even in cases when β is not an integer.

Proof. The proof is a simple variant of that of Theorem 5.2, see [5] for details. The basic expansion used is now

$$\begin{aligned} f(1+\frac{t}{n})(1+\frac{t}{n})^{-n-1} &\sim e^{-t}\left(\frac{-n}{t}\right)^{\alpha}\left(\log\left(\frac{-n}{t}\right)\right)^{\beta} \\ &\sim \frac{e^{-t}(-t)^{-\alpha}}{n^{\alpha}}(\log n)^{\beta}\left(1 - \frac{\log(-t)}{\log n}\right)^{\beta} \\ &\sim \frac{e^{-t}(-t)^{-\alpha}}{n^{\alpha}}(\log n)^{\beta}\left(1 - \beta\frac{\log(-t)}{\log n} + \frac{\beta(\beta-1)}{2!}(\frac{\log(-t)}{\log n})^2 + \cdots\right). \end{aligned}$$

It is again justified to employ this expansion inside the integral defining the coefficients. What comes out is a collection of Hankel integrals of the form

$$-\frac{1}{2i\pi}\int_{+\infty}^{(0)}(-t)^{-s}e^{-t}(\log(-t))^k\,dt$$

which reduce to derivatives of $\frac{1}{\Gamma(s)}$ as is seen by differentiation with respect to s under the integral sign. □

A typical example of application is

$$[z^n]\frac{1}{\sqrt{1-z}}\frac{1}{\frac{1}{z}\log\frac{1}{1-z}} = \frac{1}{\sqrt{\pi n}\log n}\left(1-\frac{\gamma+2\log 2}{\log n}+\mathcal{O}(\frac{1}{\log^2 n})\right).$$

A direct adaptation of the proof of our basic theorems leads to results regarding the coefficients of many functions that have a nearly polynomial growth. It is proved in [5] that, for a class of functions L *slowly varying* at ∞ and for $\alpha \neq 0, -1, \ldots$, one has:

$$[z^n]\frac{1}{(1-z)^\alpha}L(\frac{1}{1-z}) \sim \frac{n^{\alpha-1}}{\Gamma(\alpha)}L(n). \tag{5.23}$$

Logarithms and their powers constitute typical instances of such slowly varying functions; iterated logarithms also belong to this class and, for a general $\alpha \neq 0, -1, \ldots$, the relation (5.23) specializes to

$$[z^n](1-z)^{-\alpha}\left(\frac{1}{z}\log\frac{1}{1-z}\right)^\beta\left(\frac{1}{z}\log\left(\frac{1}{z}\log\frac{1}{1-z}\right)\right)^\delta \sim \frac{n^{\alpha-1}}{\Gamma(\alpha)}(\log n)^\beta(\log\log n)^\delta.$$

A full asymptotic expansion in descending powers of $\log n$ can once more be derived in this case [5].

When β is a nonnegative integer, the error terms can be further improved with respect to the ones predicted by the general statement of Theorem 5.3. For instance, we have

$$\begin{aligned}
[z^n]\frac{1}{1-z}\log\frac{1}{1-z} &= \log n+\gamma+\frac{1}{2n}-\frac{1}{12n^2}+\mathcal{O}(\frac{1}{n^4})\\
[z^n]\frac{1}{\sqrt{1-z}}\log\frac{1}{1-z} &\sim \frac{1}{\sqrt{\pi n}}\left(\log n+\gamma+2\log 2+\mathcal{O}(\frac{\log n}{n})\right),
\end{aligned}$$

as discussed below.

Special cases. *The case of integral α.* When α is an integer ≤ 0, the coefficients of $f(z) = (1-z)^{-\alpha}$ eventually reduce to zero, so that the asymptotic problem for coefficients becomes trivial. This situation is in a sense covered by the statement of Theorem 5.2 since then $1/\Gamma(\alpha) = 0$.

When logarithms are present while $\alpha \in \{0, -1, -2, \ldots\}$, the expansion of Theorem 5.3 concerning

$$[z^n](1-z)^{-\alpha}(\frac{1}{z}\log\frac{1}{1-z})^{\beta}$$

remains valid provided we again take into account the equality $1/\Gamma(\alpha) = 0$ in formula (5.22). Thus, it is only the first term that vanishes in (5.22):

$$f_n = [z^n]f(z) \sim n^{\alpha-1}(\log n)^{\beta}\left[\frac{C_1^*}{1!}\frac{\beta}{\log n} + \frac{C_2^*}{2!}\frac{\beta(\beta-1)}{(\log n)^2} + \cdots\right], \qquad (5.24)$$

where, $C_k^* = C_k^*(\alpha)$ represents

$$\frac{d^k}{ds^k}\frac{1}{\Gamma(s)}\bigg|_{s=\alpha}.$$

For instance, we have

$$[z^n]\frac{z}{\log(1-z)^{-1}} = -\frac{1}{n\log^2 n} + \frac{2\gamma}{n\log^3 n} + \mathcal{O}(\frac{1}{n\log^4 n}).$$

The case of integral β. When $\beta = k$ is a positive integer, the expansion of Theorem 5.3 terminates since only its first $(k+1)$ terms are nonzero.

In the general case of nonintegral α, there exists a more complete expansion of the form

$$[z^n](1-z)^{-\alpha}\log^k\frac{1}{1-z} \sim \frac{n^{\alpha-1}}{\Gamma(\alpha)}\left[E_0(\log n) + \frac{E_1(\log n)}{n} + \frac{E_2(\log n)}{n^2} + \cdots\right],$$

where the E_j are polynomials of degree at most k, as can be proved by adapting the proof valid for general α. It it is worth however mentioning an alternative approach due to Frobenius and Jungen and based on the observation that

$$(1-z)^{-\alpha}\log^k\frac{1}{1-z} = \frac{\partial^k}{\partial\alpha^k}(1-z)^{-\alpha}.$$

If one lets the operators of differentiation ($\partial/\partial\alpha$) and coefficient extraction ($[z^n]$) commute —this is justified by Cauchy's coefficient formula— one gets directly

$$[z^n](1-z)^{-\alpha}\log^k\frac{1}{1-z} = \frac{\partial^k}{\partial\alpha^k}\frac{\Gamma(n+\alpha)}{\Gamma(\alpha)\Gamma(n+1)}.$$

For instance,

$$[z^n](1-z)^{-\alpha}\log\frac{1}{1-z} = \frac{\Gamma(n+\alpha)}{\Gamma(\alpha)\Gamma(n+1)}\left[\frac{1}{\alpha}+\frac{1}{\alpha+1}+\cdots+\frac{1}{n+\alpha-1}\right].$$

If α is an integer ≥ 0, the coefficients appear as finite differences of coefficients of logarithmic functions. Explicit formulæ are then available elementarily from the calculus of finite differences. For instance, with $\alpha = -r$ with r an integer,

$$[z^n](1-z)^r\log\frac{1}{1-z} = (-1)^r\frac{r!}{n(n-1)\cdots(n-r)}.$$

EXERCISE 7. Show that

$$[z^n]\frac{1}{\sqrt{1-z}}\log\frac{1}{1-z} = \frac{1}{4^n}\binom{2n}{n}[2H_{2n}-H_n].$$

Find an explicit formula for

$$[z^n](1-z)^{-\alpha}\log^2\frac{1}{1-z}.$$

Write a computer algebra programme to find the corresponding formulæ when $\log^2$ is replaced by $\log^k$, for $k = 1..5$.

EXERCISE 8. Fluctuations occur in the case of singular expansions involving complex exponents. Analyze

$$[z^n](1-z)^{\pm i}$$

and prove that

$$[z^n]\cos\left(\log\frac{1}{1-z}\right) = \frac{P(\log n)}{n} + O(\frac{1}{n^2}),$$

where $P(u)$ is a continuous and 1-periodic function.

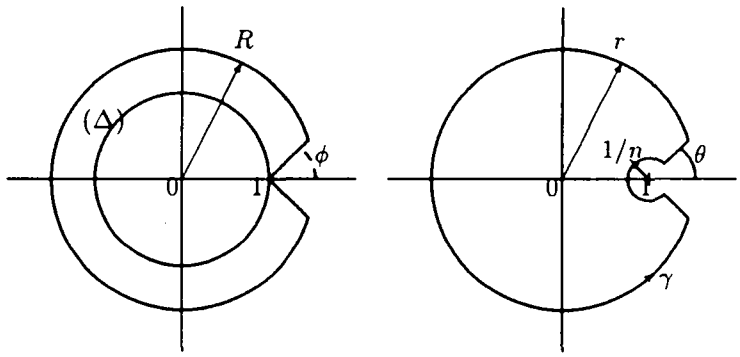

Figure 5.3: A Δ–domain and the contour used to establish Theorem 5.4.

5.4 Hankel contours and transfers

Once coefficients of a fairly extensive scale have been made explicit, there remains to show how to translate error terms in the asymptotic approximation of a function near a singularity. This task is technically a little simpler as a coarser analysis suffices. It still bears on the same principles of contour integration by means of Hankel–type paths.

A natural extension of the previous results is to assume the error terms valid in the complex plane slit along the real half line $[1, +\infty[$. In fact weaker conditions suffice and any domain whose boundary makes an acute angle with the half line $[1, +\infty[$ is suitable.

Definition 5.1 *Given two numbers ϕ, R with $R > 1$ and $0 < \phi < \frac{\pi}{2}$, the open domain $\Delta(\phi, R)$ is defined as*

$$\Delta(\phi, R) = \{z \mid |z| < R,\ z \neq 1,\ |\mathrm{Arg}(z-1)| > \phi\}.$$

A domain is a Δ-domain if it is a $\Delta(\phi, R)$ for some R ($R > 1$) and some ϕ ($0 < \phi < \frac{\pi}{2}$). A function is Δ-analytic if it is analytic in some Δ-domain.

Analyticity in a Δ–domain is the basic condition for *transfer* of error terms from functions to coefficients.

Theorem 5.4 (Transfer, first kind) *Assume that $f(z)$ is Δ-analytic and that it satisfies in the intersection of a neighbourhood of 1 and of its Δ-domain the condition*

$$f(z) = O\left((1-z)^{-\alpha}(\log \frac{1}{1-z})^{\beta}\right).$$

Then

$$[z^n]f(z) = \mathcal{O}(n^{\alpha-1}(\log n)^{\beta}).$$

Proof. The starting point is Cauchy's coefficient formula,

$$f_n \equiv [z^n]f(z) = \frac{1}{2i\pi}\int_\gamma f(z)\,\frac{dz}{z^{n+1}},$$

where γ is a loop around the origin which is internal to the Δ–domain of f. We choose the positively oriented contour $\gamma = \gamma_1 + \gamma_2 + \gamma_3 + \gamma_4$, with

$$\begin{cases} \gamma_1 &= \{\, z \mid |z-1| = \frac{1}{n}, |\mathrm{Arg}(z-1)| \geq \theta] \,\} \\ \gamma_2 &= \{\, z \mid \frac{1}{n} \leq |z-1|,\ |z| \leq r,\ \mathrm{Arg}(z-1) = \theta \,\} \\ \gamma_3 &= \{\, z \mid |z-1| = r,\ |\mathrm{Arg}(z-1)| \geq \theta] \,\} \\ \gamma_4 &= \{\, z \mid \frac{1}{n} \leq |z-1|,\ |z| \leq r,\ \mathrm{Arg}(z-1) = -\theta \,\}. \end{cases}$$

If the Δ domain of f is $\Delta(\phi, R)$, we assume that $1 < r < R$, and $\phi < \theta < \frac{\pi}{2}$, so that the contour γ lies entirely inside the domain of analyticity of f.

For $j = 1, 2, 3, 4$, let

$$f_n^{(j)} = \frac{1}{2i\pi}\int_{\gamma_j} f(z)\,\frac{dz}{z^{n+1}}.$$

The analysis proceeds by bounding the absolute value of the integral along each of the four parts. In order to keep notations simple, we detail the proof in the case where $\beta = 0$.

1. *Inner circle.* From trivial bounds, the contribution there is

$$|f_n^{(1)}| = \mathcal{O}(\frac{1}{n}) \cdot \mathcal{O}((\frac{1}{n})^{-\alpha}),$$

as the function is $\mathcal{O}((\frac{1}{n})^{-\alpha})$, the contour has length $\mathcal{O}(\frac{1}{n})$, and z^{-n-1} is $\mathcal{O}(1)$ there.

2. *Rectilinear part.* Setting $\omega = e^{i\theta}$, and performing the change of variable $z = 1 + \frac{\omega t}{n}$, we find

$$|f_n^{(2)}| < \frac{1}{2\pi}\int_1^\infty K\left(\frac{t}{n}\right)^{-\alpha}\left|1 + \frac{\omega t}{n}\right|^{-n-1} dt,$$

for some constant $K > 0$ such that $|f(z)| < K(1-z)^{-\alpha}$ over the Δ-domain. From the relation

$$\left|1 + \frac{\omega t}{n}\right| \geq 1 + \Re(\frac{\omega t}{n}) = 1 + \frac{t}{n}\cos\theta,$$

there results

$$|f_n^{(2)}| < \frac{K}{2\pi} J_n n^{\alpha-1} \qquad \text{where} \qquad J_n = \int_1^\infty t^{-\alpha}\left(1 + \frac{t\cos\theta}{n}\right)^{-n} dt.$$

For a given α, the integrals J_n are all bounded above by some constant since they admit a limit as n tends to infinity:

$$J_n \to \int_1^\infty t^{-\alpha} e^{-t\cos\theta}\, dt.$$

(The condition on θ that $0 < \theta < \frac{\pi}{2}$ precisely ensures convergence of the integral.) Thus, globally, on this part of the contour, we have

$$|f_n^{(2)}| = \mathcal{O}(n^{\alpha-1}),$$

and the same bound holds for γ_4 by symmetry.

3. *Outer circle.* There, $f(z)$ is bounded while z^{-n} is of the order of r^{-n}. Thus, $f_n^{(3)}$ is exponentially small.

In summary, each of the four integrals of the split contour contributes $\mathcal{O}(n^{\alpha-1})$. The statement of the theorem thus follows. □

An adaptation of the proof shows that $o(.)$ error terms may be translated similarly. All that is required is a further breakup of the rectilinear part in the proof of Theorem 5.4 at a distance $\log^2 n/n$ from 1, see [5] for details.

Theorem 5.5 (Transfer, second kind) *Assume that $f(z)$ is Δ-analytic and that it satisfies in the intersection of a neighbourhood of 1 and of the Δ-domain the condition*

$$f(z) = o\left((1-z)^{-\alpha}(\log\frac{1}{1-z})^\beta\right).$$

Then

$$[z^n]f(z) = o(n^{\alpha-1}(\log n)^\beta).$$

An immediate corollary of Theorem 5.5 is the possibility of transferring asymptotic equivalence to coefficients. For instance,

$$f(z) \sim (1-z)^{-\alpha} \qquad \Longrightarrow \qquad [z^n]f(z) \sim \frac{n^{\alpha-1}}{\Gamma(\alpha)},$$

where it is assumed that $\alpha \notin \{0, -1, -2, \cdots\}$. The conditions are the usual ones, namely validity of the asymptotic equivalence in a Δ–domain. The proof is simply based on the observation that, with $g(z) = (1-z)^{-\alpha}$,

$$f(z) \sim g(z) \qquad \text{iff} \qquad f(z) = g(z) + o(g(z)).$$

It then suffices to apply Theorem 5.2 to the first term, and Theorem 5.5 to the remainder.

EXERCISE 9. This exercise shows that the Δ–analyticity condition can be weakened for functions that are large at their singularity. Assume that $f(z)$ is analytic in the open disk $|z| < 1$, and that in the whole of the open disk

$$f(z) = \mathcal{O}((1-z)^{-\alpha}).$$

Then, provided that $\alpha > 1$,

$$[z^n]f(z) = O(n^{\alpha-1}).$$

[Hint. Integrate on the circle of radius $1 - \frac{1}{n}$.]

5.5 Mappings between asymptotic scales

The theorems that we have seen justify a fairly mechanical process to translate asymptotic information on a function into information on its coefficients. The process is based on a set of simple rules. With $\alpha \notin \{0, -1, -2, \ldots\}$, we have

$$\begin{cases} f(z) = (1-z)^{-\alpha} & \Longrightarrow \quad f_n = \dfrac{n^{\alpha-1}}{\Gamma(\alpha)} + \cdots \\ f(z) = \mathcal{O}((1-z)^{-\alpha}) & \Longrightarrow \quad f_n = \mathcal{O}(n^{\alpha-1}) \\ f(z) = o((1-z)^{-\alpha}) & \Longrightarrow \quad f_n = o(n^{\alpha-1}) \\ f(z) \sim (1-z)^{-\alpha} & \Longrightarrow \quad f_n \sim \dfrac{n^{\alpha-1}}{\Gamma(\alpha)} \end{cases}$$

together with corresponding refinements for logarithmic terms. A table that extends examples already given is displayed in Fig 5.4

The only requirement of the method is that the asymptotic expansion of the function should be valid in an area of the complex plane extending beyond the disk of convergence of the original series, as described by the notions of Δ-domain and Δ-analyticity. This is usually not a stringent requirement in combinatorial applications, for reasons that we now explain.

The basic functions

$$\frac{1}{1-z},\ \exp(z),\ \log\frac{1}{1-z},\ \sqrt{1-z},$$

are all Δ-analytic (with $\exp(z)$ being even entire). Apart from a few degenerate exceptions, compositions of theses base functions are continuable in larger domains, and thus Δ-analytic in turn. In addition, their singular expansions obtain from direct composition of singular or regular expansions of simpler functions, the singular expansions of the base functions being naturally valid in Δ-domains.

Thus, one should expect the method of singularity analysis to be applicable to most functions that are composition of base functions, provided their singular growth is only polynomial. (For instance $\exp(z/(1-z))$ is excluded, but such fast growing functions are well covered by the saddle point method.) This class includes the generating functions for many of the elementary non-recursive combinatorial structures that can be specified using sequences, sets, and cycles. Thus, for *a priori* reasons, singularity analysis is broadly applicable in elementary combinatorics.

It is possible to go one step further. Recursively defined structures lead to functional equations whose solutions may also be analyzed locally. Although the analysis is less direct, patterns of polynomial growth often emerge for implicitly defined functions most notably in the context of combinatorial tree models.

5.6 Explicit functions

We examine now several applications of singularity analysis to functions explicitly given by "analytic" expressions. The examples are mostly drawn from combinatorial enumeration.

1. "Clouds". The function

$$C(z) = \frac{e^{-\frac{z}{2}-\frac{z^2}{4}}}{\sqrt{1-z}}$$

Function	*Coefficients*
$(1-z)^{3/2}$	$\frac{1}{\sqrt{\pi n^5}}(\frac{3}{4}+\frac{45}{32n}+\frac{1155}{512n^2}+\mathcal{O}(\frac{1}{n^3}))$
$(1-z)$	(0)
$(1-z)^{1/2}$	$-\frac{1}{\sqrt{\pi n^3}}(\frac{1}{2}+\frac{3}{16n}+\frac{25}{256n^2}+\mathcal{O}(\frac{1}{n^3}))$
$(1-z)^{1/2}\log(1-z)^{-1}$	$-\frac{1}{\sqrt{\pi n^3}}(\frac{1}{2}\log n+\frac{\gamma+2\log 2-2}{2}+\mathcal{O}(\frac{\log n}{n}))$
$(1-z)^{1/3}$	$-\frac{1}{3\Gamma(\frac{2}{3})n^{4/3}}(1+\frac{2}{9n}+\frac{7}{81n^2}+\mathcal{O}(\frac{1}{n^3}))$
$z\log^{-1}(1-z)^{-1}$	$\frac{1}{n\log^2 n}(-1+\frac{2\gamma}{\log n}+\frac{\pi^2-6\gamma^2}{2\log^2 n}+\mathcal{O}(\frac{1}{\log^3 n}))$
1	(0)
$\log(1-z)^{-1}$	$\frac{1}{n}$
$\log^2(1-z)^{-1}$	$\frac{1}{n}(2\log n+2\gamma-\frac{1}{n}-\frac{1}{6n^2}+\mathcal{O}(\frac{1}{n^4}))$
$(1-z)^{-1/3}$	$\frac{1}{\Gamma(\frac{1}{3})n^{2/3}}(1+\mathcal{O}(\frac{1}{n}))$
$(1-z)^{-1/2}$	$\frac{1}{\sqrt{\pi n}}(1-\frac{1}{8n}+\frac{1}{128n^2}+\frac{5}{1024n^3}+\mathcal{O}(\frac{1}{n^4}))$
$(1-z)^{-1/2}\log(1-z)^{-1}$	$\frac{1}{\sqrt{\pi n}}(\log n+\gamma+2\log 2-\frac{\log n+\gamma+2\log 2}{8n}+\mathcal{O}(\frac{\log n}{n^2}))$
$(1-z)^{-1}$	1
$(1-z)^{-1}\log(1-z)^{-1}$	$\log n+\gamma+\frac{1}{2n}-\frac{1}{12n^2}+\frac{1}{120n^4}+\mathcal{O}(\frac{1}{n^6}))$
$(1-z)^{-1}\log^2(1-z)^{-1}$	$\log^2 n+2\gamma\log n+\gamma^2-\frac{\pi^2}{6}+\mathcal{O}(\frac{\log n}{n})$
$(1-z)^{-3/2}$	$\sqrt{\frac{n}{\pi}}(2+\frac{3}{4n}-\frac{7}{64n^2}+\mathcal{O}(\frac{1}{n^3}))$
$(1-z)^{-3/2}\log(1-z)^{-1}$	$\sqrt{\frac{n}{\pi}}(2\log n+2\gamma+4\log 2-2+\frac{3\log n}{4n}+\mathcal{O}(\frac{1}{n}))$
$(1-z)^{-2}$	$n+1$
$(1-z)^{-2}\log(1-z)^{-1}$	$n\log n+(\gamma-1)n+\log n+\frac{1}{2}+\gamma+\mathcal{O}(\frac{1}{n})$
$(1-z)^{-2}\log^2(1-z)^{-1}$	$n(\log^2 n+2(\gamma-1)\log n+\gamma^2-2\gamma+2-\frac{\pi^2}{6}+\mathcal{O}(\frac{\log n}{n}))$
$(1-z)^{-3}$	$\frac{1}{2}n^2+\frac{3}{2}n+1$

Figure 5.4: A table of some commonly encountered functions and the asymptotic forms of their coefficients.

is the EGF of 2-regular graphs or equivalently "clouds". (Let n straight lines in the plane be given; a "cloud" [2] is a set of n points no three of which are collinear.) As this is our first example, it is worth spelling out the analysis of coefficients.

The function $C(z)$ being the product of $e^{-z/2-z^2/4}$ that is entire and of $(1-z)^{-1/2}$ that is analytic in the unit disk is itself analytic in the unit disk. Furthermore, as $(1-z)^{-1/2}$ is Δ-analytic (it is well-defined an analytic in the complex plane slit along $[1, +\infty[$, for instance), $C(z)$ is itself Δ-analytic, with a singularity at $z = 1$.

The asymptotic expansion of $C(z)$ near $z = 1$ obtains as the product of the standard Taylor expansion of $e^{-z/2-z^2/4}$ by $(1-z)^{-1/2}$. Its validity extends clearly to a Δ-domain. We find

$$C(z) = \frac{e^{-3/4}}{\sqrt{1-z}} + e^{-3/4}\sqrt{1-z} + \frac{e^{-3/4}(1-z)^{3/2}}{4} - \frac{e^{-3/4}(1-z)^{5/2}}{12} + \cdots.$$

By the principles of singularity analysis (Theorems 5.2 and 5.4), the asymptotic determination of the coefficients $c_n = [z^n]C(z)$ results from a direct translation which we present here in tabular form.

$C(z) =$	$c_n =$
$e^{-3/4}\dfrac{1}{\sqrt{1-z}}$	$e^{-3/4}\dbinom{n-1/2}{-1/2} \sim \dfrac{e^{-3/4}}{\sqrt{\pi n}}\left[1 - \dfrac{1}{8n} + \dfrac{1}{128n^2} + \cdots\right]$
$+\, e^{3/4}\sqrt{1-z}$	$+e^{-3/4}\dbinom{n-3/2}{-3/2} \sim \dfrac{-e^{-3/4}}{2\sqrt{\pi n^3}}\left[1 + \dfrac{3}{8n} + \cdots\right]$
$+\, \mathcal{O}((1-z)^{3/2})$	$+\mathcal{O}(\dfrac{1}{n^{5/2}})$.

Terms are then regrouped with expansions suitably truncated to the coarsest error term, so that here a 3-term expansion results.

In the sequel, we shall not detail such computations and content ourselves with putting in parallel the function's expansion and the coefficient's expansion:

$$\begin{aligned} C(z) &= \frac{e^{-3/4}}{\sqrt{1-z}} + e^{3/4}\sqrt{1-z} + +\mathcal{O}((1-z)^{3/2}) && (z \to 1) \\ c_n &= \frac{e^{-3/4}}{\sqrt{\pi n}} + \frac{3e^{-3/4}}{8\sqrt{\pi n^3}} + \mathcal{O}(\frac{1}{n^{5/2}}) && (n \to +\infty). \end{aligned}$$

2. *Unary-binary Trees.* The function

$$U(z) = \frac{1 - z - \sqrt{(1+z)(1-3z)}}{2z}$$

is the OGF of unary-binary trees. It is singular at $z = -1$ and $z = \frac{1}{3}$, the dominant singularity being at $z = \frac{1}{3}$. Around the point $\frac{1}{3}$, a singular expansion holds,

$$U(z) = 1 - 3^{1/2}\sqrt{1-3z} + \mathcal{O}((1-3z)^{3/2}),$$

so that, with $U_n = [z^n]U(z)$,

$$U_n = \sqrt{\frac{3}{4\pi n^3}}\, 3^n + \mathcal{O}(3^n n^{-5/2}).$$

3. *Children's Rounds.* The function

$$R(z) = \exp(z \log \frac{1}{1-z}) = (1-z)^{-z}$$

is the EGF of certain combinatorial configurations introduced by Stanley [15] and nicknamed by him "children's rounds". (A round is a set of directed cycles each of which has a center attached.) An equivalent form is

$$R(z) = \frac{1}{1-z} e^{(1-z)\log(1-z)}$$

so that the only singularity is at $z = 1$, where

$$R(z) = \frac{1}{1-z} + \log(1-z) + \mathcal{O}((1-z)^{0.99}).$$

Thus for coefficients,

$$r_n \equiv [z^n]R(z) = 1 - \frac{1}{n} + \mathcal{O}(n^{-1.99}).$$

A more detailed analysis yields

$$r_n = 1 - \frac{1}{n} - \frac{1}{2n^2}(\log n + \gamma - 1) + \mathcal{O}(\frac{\log^2 n}{n^3}),$$

and an expansion to any order can be obtained.

EXERCISE 10. Describe the shape of a full asymptotic expansion of r_n. Write a computer algebra programme to determine the expansion to 20 terms.

4. An elementary function. The final example is meant to show the way rather arbitrary compositions of basic functions can be treated by singularity analysis. Consider the function

$$F(z) = \frac{1}{2}\left[1 - \sqrt{1 - 4\log\frac{1}{1 - \log\frac{1}{1-z}}}\right],$$

which is built as a composition

$$F(z) = C(L(L(z))) \qquad \text{where } C(z) = \frac{1}{2}(1 - \sqrt{1-4z}),\ L(z) = \log\frac{1}{1-z}.$$

(Combinatorially, F is the EGF of trees in which nodes are replaced by cycles of cycles, a rather artificial combinatorial object!)

The problem is to locate the dominant singularity of $F(z)$ and determine its nature, which can be done inductively on the structure of $F(z)$. The dominant positive singularity ρ of $F(z)$ satisfies

$$L(L(\rho)) = \frac{1}{4} \qquad \text{so that} \qquad \rho = 1 - e^{e^{-1/4}-1},$$

since $C(z)$ is singular at $\frac{1}{4}$, $L(z)$ has positive coefficients and it assumes the value ∞ when it becomes singular.

Since $L(L(z))$ is analytic at ρ, a local expansion of $F(z)$ is obtained by composing an expansion of $C(z)$ at $\frac{1}{4}$ with the standard Taylor expansion of $L(L(z))$ at ρ. All computations done, this gives us

$$F(z) = \frac{1}{2} - C_1(\rho - z)^{1/2} + \mathcal{O}((\rho - z)^{3/2}) \quad \text{with} \quad C_1 = e^{\frac{5}{8} - \frac{1}{2}e^{-1/4}}.$$

In summary, we have found

$$f_n \equiv [z^n]F(z) = \frac{C_1}{2\rho\sqrt{\pi n^3}}\left(\frac{1}{\rho}\right)^n\left[1 + \mathcal{O}(\frac{1}{n})\right],$$

with

$$\rho = 1 - e^{e^{-1/4}-1} \approx 0.198443, \qquad C_1 = e^{\frac{5}{8} - \frac{1}{2}e^{-1/4}} \approx 1.26566.$$

The method clearly applies to a large class of "elementary" functions of combinatorial analysis that are defined by composition of exponentials, logarithms, and algebraic roots.

5.7 Composition of singularities and asymptotics of sums

This section is devoted to developing a reasonably general strategy for the asymptotic analysis of a class of combinatorial sums of the form

$$S_n = \sum_{k=1}^{n} f_k a_n^{(k)}.$$

There f_k is a sequence of numbers, usually of a simple form like $\frac{1}{k}, 1, H_k$, and called the *weights*, and the $a_n^{(k)}$ are a triangular array of numbers, like $\binom{n-1}{k-1}, \binom{n}{n-k}$.

For the weights f_k we shall consider expressly sequences such that $f(z)$ is Δ–analytic with a singular expansion involving functions of the standard scale of Theorems 5.2, 5.3, 5.4. Examples are[1]

$$\frac{1}{k},\ \frac{1}{4^k}\binom{2k}{k},\ 1,\ H_k,\ k,\ k^2,\ \ldots.$$

The sums to be discussed here are such that the $a_n^{(k)}$ arise as coefficients of the powers of some fixed function,

$$a_n^{(k)} = [z^n](a(z))^k \qquad \text{where} \qquad a(z) = \sum_{n=1}^{\infty} a_n z^n,$$

with $a(z)$ an analytic function at the origin having non–negative coefficients and satisfying $a(0) = 0$. Some $a(z)$ of interest are

$$\frac{z}{1-z},\ ze^z,\ z(1+z),\ \frac{1-\sqrt{1-4z}}{2},\ \frac{1-2z-\sqrt{1-4z}}{2z}, \tag{5.25}$$

with corresponding $a_n^{(k)}$

$$\binom{n-1}{k-1},\ \frac{k^{n-k}}{(n-k)!},\ \binom{k}{n-k},\ \frac{k}{n}\binom{2n-k-1}{n-1},\ \frac{k}{n}\binom{2n}{n-k}.$$

An interesting class of such sums comes from the Lagrange inversion theorem: If $a(z)$ is implicitly defined by

$$a(z) = z\phi(a(z)) \qquad \text{with} \qquad \phi(u) = \sum_{n=0}^{\infty} \phi_n u^n,$$

[1] Weights like $\log k$, $\sqrt{k}$, $1/(k^2+1)$, etc, also satisfy these conditions, but the proofs require advanced techniques akin to Mellin transforms that form the subject of a future chapter.

then

$$a_n^{(k)} = \frac{k}{n}\phi_{n-k}^{(n)} \qquad \text{where} \qquad \phi_i^{(j)} = [z^i](\phi(u))^j.$$

For instance, the last two cases of (5.25) are obtained in this way from $\phi(u) = 1/(1-u)$ and $\phi(u) = (1+u)^2$.

By design, the generating function of the S_n is simply

$$S(z) = \sum_{n=1}^{\infty} S_n z^n = f(a(z)) \qquad \text{with} \qquad f(z) = \sum_{k=1}^{\infty} f_k z^k.$$

Thus the asymptotic analysis of S_n should be based on a general discussion of composition of singularities of $f(z)$ and $a(z)$.

Let R denote the radius of convergence of $a(z)$. By convention, we set

$$a(R) := \lim_{x \to R^-} a(x),$$

a quantity $\leq +\infty$ which is well-defined since $a(z)$ has nonnegative coefficients. Three broad types of asymptotic behaviour arise dependent upon the conditions

$$\begin{cases} a(R) > 1 & : \text{ supercritical case} \\ a(R) = 1 & : \text{ critical case} \\ a(R) < 1 & : \text{ subcritical case.} \end{cases}$$

1. Supercritical case. We assume here that $a(R) > 1$, so that there exists some positive number $\rho \in]0, R[$ such that $a(\rho) = 1$ with $a(z)$ being then analytic at ρ. Thus $S(z) = f(a(z))$ is singular at $z = \rho$ (there, we have by positivity of coefficients $a'(\rho) \neq 0$), and

$$S_n \asymp (\frac{1}{\rho})^n.$$

The nature of the singularity of $S(z)$ is thus dictated by that of $f(z)$. Refined estimates result from a detailed analysis of the singularity at $z = \rho$ which is a dominant singularity.

Let us assume that for all angles $\theta \neq 0$ (2π), the following technical condition is satisfied:

$$|a(\rho e^{i\theta})| < a(\rho) = 1.$$

This holds for instance if all the a_n are nonzero, by the triangular inequality. (It may be proved that this condition only excludes functions such that

$a(z) = z^p b(z^q)$, for some function $b(z)$ analytic at the origin, and some integers p, q with $q > 1$.) Then $z = \rho$ is the unique dominant singularity of $f(a(z))$. It is easy to see that $f(a(z))$ is Δ–analytic since $a(z)$ is locally angle–preserving (conformal) at $z = \rho$. Finally, a local singular expansion of $f(z)$ results from a composition of the singular expansion of $f(z)$ at $z = 1$ with the regular expansion of $a(z)$ at $z = \rho$.

Cases of application of the method are to $a(z)$ of the form

$$\frac{z}{1-z}, \quad ze^z, \quad z + z^2$$

with the corresponding values of $a_n^{(k)}$

$$\binom{n-1}{k-1}, \quad \frac{k^{n-k}}{(n-k)!}, \quad \binom{k}{n-k}.$$

As an illustration, the analysis of

$$S_n = \sum_{k=1}^{n} H_k \frac{k^{n-k}}{(n-k)!},$$

is based on the generating function

$$S(z) = \frac{1}{1-ze^z} \log \frac{1}{1-ze^z}.$$

The dominant singularity is ρ such that $\rho e^\rho = 1$, that is $\rho \approx 0.567143$. Thus, we have

$$S(z) \sim \frac{1}{(1+\rho)(\rho - z)} \log \frac{1}{\rho - z} \qquad (z \to \rho)$$

so that by, singularity analysis,

$$S_n \sim \frac{1}{\rho(1+\rho)} (\frac{1}{\rho})^n \log n \qquad (n \to +\infty).$$

EXERCISE 11. Prove that the equality

$$|a(\rho e^{i\theta})| = a(\rho)$$

for *some* ρ smaller than the radius of convergence of $a(z)$ and *some* $\theta \neq 0$ is sufficient to imply that $a(z) = z^p b(z^q)$ with some $q \geq 2$.

EXERCISE 12. Develop a complete proof based on elementary topology and local analysis of the fact that $f(a(z))$ is Δ-analytic in the supercritical case.

EXERCISE 13. Analyse the alternating sum

$$\sum_{k=0}^{\infty}(-1)^k H_k \frac{k^{n-k}}{(n-k)!}.$$

2. *Subcritical case.* This is the situation where $a(R) < 1$. Thus the regular expansion of $f(z)$ at $a(R)$ should be composed with the singular expansion of $a(z)$ at ρ. The nature of the singularity of $S(z)$ is thus dictated by that of $a(z)$. This case is technically similar to the supercritical case.

Consider for instance the function

$$a(z) = z\phi(a(z)) \qquad \text{with} \qquad \phi(u) = \frac{1}{1-u},$$

so that

$$a(z) = \frac{1-\sqrt{1-4z}}{2} \qquad \text{and} \qquad a_n^{(k)} = \frac{k}{n}\binom{2n-k-1}{n-1},$$

by Lagrange inversion. There we have $R = \frac{1}{4}$ and $a(R) = \frac{1}{2}$. Thus the sum corresponding to the weight $f_k = \frac{1}{k}$,

$$S_n = \frac{1}{n}\sum_k \binom{2n-k-1}{n-1}$$

has generating function

$$S(z) = -\log\frac{1+\sqrt{1-4z}}{2} = \log 2 - 2(\frac{1}{4}-z)^{1/2} + \mathcal{O}((\frac{1}{4}-z)),$$

and

$$S_n \sim \frac{4^n}{2\sqrt{\pi n^3}}.$$

3. *Critical case.* When $a(R) = 1$, the two singular expansions of $f(z)$ and $a(z)$ should be composed. This often occurs with sums of the Lagrange type. For instance,

$$a(z) = z\phi(a(z)) \qquad \text{with} \qquad \phi(u) = (1+u)^2$$

corresponds to

$$a(z) = \frac{1 - 2z - \sqrt{1 - 4z}}{2z} \qquad \text{and} \qquad a_n^{(k)} = \frac{k}{n}\binom{2n}{n-k}.$$

The function is singular at $R = \frac{1}{4}$ near which it admits an expansion

$$a(z) = 1 - 4h^{1/2} + 8h - 16h^{3/2} + 32h^2 - \cdots,$$

in terms of $h = \frac{1}{4} - z$. So, for the weight $f_k = H_k$, we get

$$S(z) = \frac{1}{1 - a(z)} \log \frac{1}{1 - a(z)} = -\frac{\log h}{8h^{1/2}} - \frac{\log 2}{2h^{1/2}} + \frac{1}{2} - \log 2 + \frac{1}{2}h^{1/2} + \cdots.$$

Thus,

$$S_n \sim \frac{4^n}{8\sqrt{\pi n}} \log n.$$

A similar situation occurs with the function

$$a(z) = z\phi(a(z)) \qquad \text{with} \qquad \phi(u) = e^u,$$

already encountered as the EGF of Cayley trees. It corresponds to

$$a_n^{(k)} = \frac{k}{n} \frac{n^{n-k}}{(n-k)!}.$$

As we shall see below, this function is Δ-analytic and it admits a singular expansion at $z = e^{-1}$,

$$a(z) = 1 - \sqrt{2}(1 - ez)^{1/2} + O(1 - ez).$$

(The corresponding sums occur at several places in the analysis of algorithms, like in linear probing hashing, storage allocation, union–find data structures, etc.)

Singularity analysis thus affords a clear discussion of whole classes of combinatorial sums when the sums have tractable generating functions. The synthetic character of the resulting analysis is notable.

EXERCISE 14. Discuss $[z^n]f(a(z))$ when $a(z)$ is any of

$$\frac{z}{(1-z)^r}, \quad \log\frac{1}{1-z}, \quad (e^z - 1),$$

or when $a(z) = z\phi(a(z))$ with $\phi(u)$ taken in

$$(1+u)^r, \quad (1+u^r), \quad \frac{1}{(1-u)^r}, \quad \lambda - 1 + e^u.$$

EXERCISE 15. Study various generalizations of the method to generating functions of the form

$$b(z) \cdot f(a(z)).$$

For instance, the Euler transformation

$$[z^n]\frac{1}{1-z}f(\frac{z}{1-z}) = \sum_{k=0}^{n}\binom{n}{k}f_k$$

and the Catalan transformation

$$[z^n]\frac{1}{\sqrt{1-4z}}f(\frac{1-2z-\sqrt{1-4z}}{2z}) = \sum_{k=0}^{n}f_k\binom{2n}{n-k}.$$

EXERCISE 16. Discuss the main asymptotic terms of the sums corresponding to the weights $f_k = k^r$ for integer exponents $r \geq 0$ in the examples discussed above.

EXERCISE 17. Find explicit forms and asymptotic forms for the coefficients of

$$\frac{1}{1-z-z^2}\log\frac{1}{1-z-z^2},\ \frac{1}{\sqrt{1-ze^z}},\ \exp(\frac{1-\sqrt{1-4z}}{2}),\ \frac{1}{\sqrt{1-Y(z)}},$$

with $Y = ze^Y$.

5.8 Implicit functions and functional equations

The method of singularity analysis applies well to functions defined implicitly and more generally to solutions of broad classes of functional equations. Such functions do arise combinatorially as generating functions of recursively defined structures.

Inverse functions. We return to the analysis of the coefficients of a function defined implicitly by an equation

$$y(z) = z\phi(y(z)) \qquad \text{or equivalently} \qquad z = \frac{y(z)}{\phi(y(z))}. \tag{5.26}$$

Here again, it is assumed that $\phi(u)$ is an entire function with nonnegative coefficients and $\phi(0) \neq 0$.

The problem of solving (5.26) is one of functional inversion. We have seen in the previous chapter that *an analytic function admits locally an analytic inverse if and only if its first derivative is nonzero.* Set $\psi(u) = u/\phi(u)$; the equation $\psi'(u) = 0$ has, under the conditions of the problem, a unique positive solution which satisfies

$$\phi(\tau) - \tau\phi'(\tau) = 0, \tag{5.27}$$

and for reasons already discussed the radius of convergence of $y(z)$ is the corresponding positive value ρ of z such that $y(\rho) = \tau$, that is to say

$$\rho = \frac{\tau}{\phi(\tau)} = \frac{1}{\phi'(\tau)}.$$

The analysis now needs to be more precise in three respects:

(i) all the dominant singularities are to be located;

(ii) analyticity of $y(z)$ in a Δ–domain must be established;

(iii) a singular expansion needs to be determined.

These points are somewhat intertwined.

The situation corresponding to the function $\phi(u) = e^u$, so that $y(z) = ze^{y(z)}$ (the Cayley generating function), is typical of the general situation. From (5.27), the radius of convergence of $y(z)$ is $\rho = e^{-1}$ corresponding to $\tau = 1$. The image of a circle in the y–plane, centered at the origin and having radius $r < 1$, by the function ye^{-y} is a curve of the z–plane that properly contains the circle $|z| = re^{-r}$, see Figure 5.5, as $\phi(y) = e^y$ that has nonnegative coefficients satisfies

$$\phi(re^{i\theta}) \leq \phi(r) \qquad \text{for all } \theta \in [-\pi, +\pi].$$

Furthermore, the inequality is strict except for $\theta \neq 0$. The image of the circle of radius 1 is a curve C that has a cusp at $\rho = e^{-1}$ since the first derivative of $y/\phi(y)$ vanishes there.

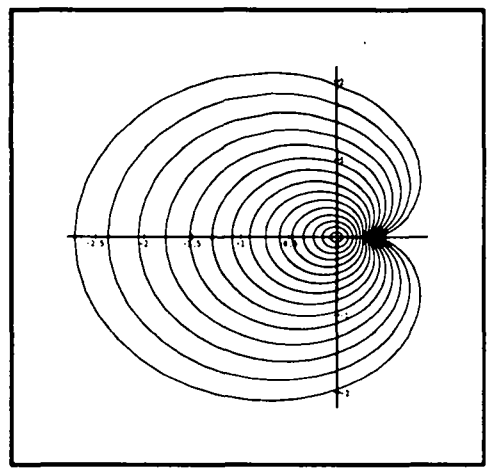

Figure 5.5: The images of concentric circles by the mapping $y \mapsto z = ye^{-y}$. It is seen that $y \mapsto z = ye^{-y}$ is injective on $|y| \leq 1$ with an image extending beyond the circle $|z| = e^{-1}$, so that the inverse function $y(z)$ is analytically continuable in a Δ-domain around $z = e^{-1}$.

This geometry shows that the inverse function of $y/\phi(y)$, that is $y(z)$, is uniquely defined for z inside C. Thus, $y(z)$ is Δ-analytic. A singular expansion for $y(z)$ is then simply derived from reversion of the power series expansion of $z = ye^{-y}$. We have

$$ye^{-y} = e^{-1} - \frac{e^{-1}}{2}(y-1)^2 + \frac{e^{-1}}{3}(y-1)^3 - \frac{e^{-1}}{8}(y-1)^4 + \cdots,$$

so that solving for y gives

$$y - 1 = \sqrt{2}(1 - ez)^{1/2} + \frac{2}{3}(1 - ez) + \mathcal{O}((1 - ez)^{3/2}).$$

The discussion of the general case follows the same principles. The relation between z and y around $(z, y) = (\rho, \tau)$ may be put under the form (see last chapter):

$$\rho - z = \left(\frac{\tau}{\phi(\tau)} - \frac{y}{\phi(y)}\right), \tag{5.28}$$

where the function $H(y)$ in the right hand side is such that $H'(\tau) = 0$. Thus, the dependency between y and z is locally a quadratic one:

$$\rho - z = \frac{1}{2!}H''(\tau)(y - \tau)^2 + \frac{1}{3!}H'''(\tau)(y - \tau)^3 + \cdots.$$

This relation can be locally inverted: first extract square roots and derive

$$-\sqrt{\rho - z} = \sqrt{\frac{H''(\tau)}{2}}(y - \tau)\left[1 + c_1(y - \tau) + c_2(y - \tau)^2 + \ldots\right],$$

which implies, by solving with respect to $y - \tau$

$$y - \tau = -d_1(\rho - z)^{1/2} + d_2(\rho - z) + d_3(\rho - z)^{3/2} + \cdots \quad \text{where } d_1 = (2/H''(\tau))^{1/2}.$$

The determination with a $-\sqrt{}$ should be chosen there as $y(z)$ increases as $z \to \rho^-$.

Proposition 5.1 *Let $y(z)$ be the solution analytic at the origin of $y(z) = z\phi(y(z))$, where ϕ is an entire function with nonnegative Taylor coefficients. Then $y(z)$ has a dominant singularity at*

$$z = \rho \qquad \text{where} \qquad \rho = \frac{\tau}{\phi(\tau)},$$

and τ is the unique positive real root of the equation

$$\phi(\tau) - \tau\phi'(\tau) = 0.$$

The singular expansion of y at ρ is

$$y(z) - \tau = \sum_{j=1}^{\infty} d_j^*(1 - \frac{z}{\rho})^{j/2}.$$

for some constants d_j^*. In particular, we have

$$d_1^* = \sqrt{\frac{2\phi(\tau)}{\phi''(\tau)}}.$$

EXERCISE 18. Compute the generating function of the d_j and express these coefficients by means of Lagrange inversion. Apply this technique to derive explicit forms for coefficients in the singular expansion of $y = ze^y$.

A simple example like $\phi(u) = 1 + u^2$ for which

$$y(z) = \frac{1 - \sqrt{1 - 4z^2}}{2z}$$

shows that it need not however be true in all generality y has a unique dominant singularity. (Here there are two conjugate singularities, $-\frac{1}{2}$ and $+\frac{1}{2}$.) However, the conditions for this are rather simple. Let us say that a power series $h(u)$ is d-periodic if $h(u) = u^e k(u^d)$ for some power series k, with d maximal. A function is called here periodic if it is d-periodic from some $d \geq 2$. An elementary argument shows that that periodicity does not occur for $y(z)$ unless $\phi(u)$ is itself periodic, in which case $y(z) = zw(z^d)$ when $\phi(u) = \psi(u^d)$ for some $d \geq 2$ and some analytic $w(z)$.

From singularity analysis, we get directly:

Proposition 5.2 *Let $y(z)$ be the solution analytic at the origin of $y(z) = z\phi(y(z))$. Then, provided $\phi(u)$ is aperiodic, and with the notations of Proposition 5.1, the coefficients satisfy*

$$[z^n]y(z) \sim \frac{d_1^* \rho^{-n}}{2\sqrt{\pi n^3}} \left[1 + \sum_{k=1}^{\infty} \frac{e_k}{n^k} \right],$$

for some effectively computable coefficient sequence e_k.

In case $\phi(u)$ is d-periodic for some $d \geq 2$, the additional condition that $n \equiv 1\ (d)$ must be imposed for an asymptotic expansion as the other coefficients all vanish. The dominant singularities are at $\rho e^{2ij\pi/d}$ and their contributions must be added up in accordance with the discussion of the next section (details left as an exercise).

EXERCISE 19. Prove that $y(z)$ is d-periodic iff $\phi(u)$ is d-periodic. Complete the analysis of Prop. 5.2 when $d \geq 2$.

EXERCISE 20. Write a computer algebra programme to determine the $\{e_k\}_{k=1}^{10}$.

Combining Proposition 5.1 with methods of the previous section, we have available a method that permits to analyze $[z^n]f(y(z))$ for a wide class of implicitly defined $y(z)$.

Pólya operators. The solution to the functional equation

$$f(z) = z \exp\left(\frac{f(z)}{1} + \frac{f(z^2)}{2} + \cdots\right) \tag{5.29}$$

is the OGF of nonplane unlabelled trees. Let Y be the solution to

$$Y(z) = ze^{Y(z)}, \tag{5.30}$$

that is to say the Cayley function. It is known that $f(z)$ has a radius of convergence ρ strictly less than 1 as its coefficients dominate those of $Y(z)$.

Rewriting the defining equation of $f(z)$ as

$$f(z) = \zeta e^{f(z)} \qquad \text{with} \qquad \zeta = \exp(\frac{f(z^2)}{2} + \frac{f(z^3)}{3} + \cdots),$$

we observe that $\zeta = \zeta(z)$ is analytic for $|z| < \rho^{1/2}$, that is to say in a disk that properly contains the disk of convergence of $f(z)$. We may thus rewrite $f(z)$ as

$$f(z) = Y(\zeta(z)).$$

Since $\zeta(z)$ is analytic at $z = \rho$, a singular expansion of $f(z)$ near $z = \rho$ results from composing the singular expansion of Y at e^{-1} with the analytic expansion of ζ at ρ. In this way, we get that for some constant C,

$$f(z) = 1 - C(1 - \frac{1}{\rho})^{1/2} + \mathcal{O}((1 - \frac{z}{\rho})).$$

Thus,

$$[z^n]f(z) \sim \frac{C}{2\sqrt{\pi n^3}}\rho^{-n}.$$

Numerically, ρ and C may be determined to great accuracy as ρ is a root of the equation $\zeta(\rho) = e^{-1}$ while f can be estimated precisely within its disk of convergence from knowledge of its first Taylor coefficients. The equation $\zeta(\rho) = e^{-1}$ can then be solved by Newton's method for instance, as ρ lies within the disk of convergence of $\zeta(z)$.

EXERCISE 21. Compute C and ρ to 100 significant digits.

5.9 Multiple singularities

The basic principle for a function with multiple dominant singularities parallels the situation of rational and meromorphic functions: *the contributions from each singularity must be added up.*

Let us demonstrate the *modus operandi* before stating the general theorem. Take for instance the function

$$g(z) = \frac{e^z}{\sqrt{1-z^2}}. \tag{5.31}$$

There are two singularities at $z = +1$ and $z = -1$, with

$$g(z) \sim \frac{e}{\sqrt{2}\sqrt{1-z}} \quad z \to +1 \qquad \text{and} \qquad g(z) \sim \frac{e^{-1}}{\sqrt{2}\sqrt{1+z}} \quad z \to -1.$$

We have

$$[z^n]\frac{e}{\sqrt{2}\sqrt{1-z}} \sim \frac{e}{\sqrt{2\pi n}} \qquad \text{and} \qquad [z^n]\frac{e^{-1}}{\sqrt{2}\sqrt{1+z}} \sim \frac{e^{-1}(-1)^n}{\sqrt{2\pi n}}.$$

To get the coefficient $[z^n]g(z)$, it proves justified to add up these two contributions (by Theorem 5.6 below), so that

$$[z^n]g(z) \sim \frac{1}{\sqrt{2\pi n}}[e + (-1)^n e^{-1}].$$

The justification for this process is provided by the technical result below.

Theorem 5.6 (Multiple singularities) *Let $f(z)$ have a finite number of singularities on the unit circle at points $\zeta_j = e^{i\theta_j}$, for $j = 1 \ldots r$.*

(H_1). Let Δ_0 be a Δ-domain. Assume that $f(z)$ is analytic in the indented disk

$$\mathcal{D} = \bigcap_{j=1}^{r} (\zeta_j \cdot \Delta_0),$$

with $\zeta \cdot \Delta_0$ the image of Δ_0 by the rotation $z \mapsto \zeta z$.

(H_2). Assume that there are r functions $h_1(z), \ldots, h_r(z)$ with $h_j(z)$ analytic in a circular neighbourhood of ζ_j such that as $z \to \zeta_j$ in $\mathcal{D}$, one has

$$f(z) = h_j(z) + \mathcal{O}\left((1 - \frac{z}{\zeta_j})^{-\alpha}\right).$$

Under these assumptions, the coefficients of $f(z)$ satisfy

$$[z^n]f(z) = \mathcal{O}(n^{\alpha-1}).$$

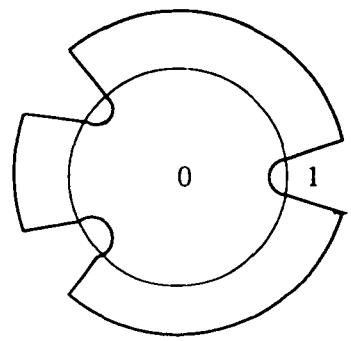

Figure 5.6: A contour used to prove the transfer theorem in the case of multiple singularities (here $r = 3$).

A function analytic in a domain like $\mathcal{D}$ is sometimes said to be star–continuable, a notion that is the natural generalization of Δ–analyticity for functions with several dominant singularities.

Proof. Like in the case of a single variable, the proof bases itself on Cauchy's coefficient formula. A composite contour γ like the one depicted on Figure 5.6 is used. Estimates on each fragment of the contour obey the same principles as in the proof of Theorem 5.4. □

In other words, each dominant singularity can be analyzed independently, the singular expansions are then each transferred to coefficients and the corresponding asymptotic contributions are finally collected.

This theorem applies to a function like $g(z)$ defined in Eq. (5.31) as follows. Define

$$f(z) = g(z) - \frac{e}{\sqrt{2}\sqrt{1-z}} - \frac{e^{-1}}{\sqrt{2}\sqrt{1+z}}.$$

Let $\zeta_1 = 1$ and $\zeta_2 = -1$ be the two dominant singularities. Then, $f(z)$ satisfies the conditions of Theorem 5.6 with $\alpha = \frac{1}{2}$, and

$$h_1(z) = -\frac{e^{-1}}{\sqrt{2}\sqrt{1+z}}, \quad h_2(z) = -\frac{e}{\sqrt{2}\sqrt{1-z}}.$$

Thus,

$$[z^n]f(z) = O(n^{-3/2}).$$

The coefficient $[z^n]g(z)$ is then recovered by

$$[z^n]g(z) = [z^n]\frac{e}{\sqrt{2}\sqrt{1-z}} + [z^n]\frac{e^{-1}}{\sqrt{2}\sqrt{1+z}} + \mathcal{O}(n^{-3/2}).$$

The process is simple though its justification is slightly complicated by the fact that one must deal with multiple expansions valid at different points (this is the rôle played by the "regular" parts h_j).

As yet another example, consider the problem of estimating the coefficients of

$$f(z) = \sqrt{\frac{1+z}{1-z}} = \exp\left(\frac{1}{2}\log\frac{1+z}{1-z}\right),$$

which is the EGF of permutations having only cycles of odd length. We have

$$\begin{aligned} f(z) &= \frac{2^{1/2}}{\sqrt{1-z}} - 2^{-3/2}\sqrt{1-z} + \mathcal{O}((1-z)^{3/2}) \quad (z \to 1) \\ f(z) &= 2^{-1/2}\sqrt{1+z} + \mathcal{O}((1+z)^{3/2}) \qquad\qquad (z \to -1). \end{aligned}$$

Therefore,

$$[z^n]f = \frac{2^{1/2}}{\sqrt{\pi n}} + \frac{-2^{-1/2} + (-1)^n 2^{1/2}}{\sqrt{\pi n^3}} + \mathcal{O}(n^{-5/2}).$$

This last example illustrates the occurrence of singular parts with different weights.

The situation of multiple dominant singularities ties with the corresponding discussion of the previous chapter. In the periodic case where the dominant singularities are all roots of unity, different regimes manifest themselves cyclically depending on modular properties of the index n, like in the two examples above. In the (seldom occurring) case where dominant singularities have arguments incommensurable to π, aperiodic fluctuations may appear, the discussion being similar to the corresponding case for rational functions.

5.10 Tauberian theory and Darboux's method

There are several alternative approaches to the analysis of coefficients of generating functions with moderate growth. *All of them naturally provide estimates compatible with singularity analysis methods* (Theorems 5.2, 5.3, and 5.4). Each one requires some sort of "*regularity condition*" either on the

part of the function or on the part of the coefficient sequence, the regularity condition of singularity analysis being in essence analytic continuation.

The methods briefly surveyed here fall into three broad categories:

(*i*) Elementary real analytic methods;

(*ii*) Tauberian theorems;

(*iii*) Darboux's method.

Elementary real analytic methods assume some *a priori* smoothness conditions on the coefficient sequence; they are included here for the sake of completeness, though properly speaking they do not belong to the galaxy of complex asymptotic methods. Their scope is mostly limited to the analysis of products while the other methods permit to approach more general functional composition patterns.

Tauberian theorems belong to the category of advanced real analysis methods; they also needs some *a priori* regularity on the coefficients, typically positivity or monotonicity.

Darboux's method requires some smoothness of the function on the closed unit disk, and, by its techniques and scope, it is the closest to singularity analysis.

We content ourselves with a brief discussion of the main results. For more information, the reader is referred to Odlyzko's excellent survey [11].

Elementary real analytic methods. An asymptotic equivalent of the coefficients of a function can sometimes be worked out elementarily from simple properties of the component functions. The regularity conditions are a smooth asymptotic behaviour of the coefficients of one of the two factors in a product of generating functions. A good source for these techniques is Bender's survey [1].

Theorem 5.7 (Bender's theorem) *Let $a(z) = \sum a_n z^n$ and $b(z) = \sum b_n z^n$ be two power series with radii of convergence $\alpha > \beta \geq 0$ respectively. Assume that $b(z)$ satisfies the ratio test,*

$$\frac{b_{n-1}}{b_n} \to \beta \qquad as \qquad n \to \infty.$$

Then the coefficients of the product $f(z) = a(z) \cdot b(z)$ satisfy

$$[z^n]f(z) \sim a(\beta)b_n \qquad as \qquad n \to \infty,$$

provided $a(\beta) \neq 0$.

Proof. (Sketch) The basis of the proof is the following chain:

$$\begin{aligned} f_n &= a_0 b_n + a_1 b_{n-1} + a_2 b_{n-2} + \cdots + a_n b_0) \\ &= b_n \left(a_0 + a_1 \frac{b_{n-1}}{b_n} + a_2 \frac{b_{n-2}}{b_n} + \cdots + a_n \frac{b_0}{b_n} \right) \\ &= b_n \left(a_0 + a_1 (\frac{b_{n-1}}{b_n}) + a_2 (\frac{b_{n-2}}{b_{n-1}})(\frac{b_{n-1}}{b_n}) + \cdots \right) \\ &\sim b_n (a_0 + a_1 \beta + a_2 \beta^2 + \cdots). \end{aligned}$$

There, only the last line requires a little elementary analysis that is left as an exercise to the reader. □

This theorem applies for instance to the EGF of 2-regular graphs:

$$f(z) = a(z) \cdot b(z) \quad \text{with} \quad a(z) = e^{-z/2 - z^2/4}, \; b(z) = \frac{1}{\sqrt{1-z}}$$

$$\Longrightarrow \qquad f_n \sim e^{-3/4} \binom{n - 1/2}{n} \sim \frac{e^{-3/4}}{\sqrt{\pi n}}.$$

Clearly, a whole collection of lemmas could be given in the same vein. Singularity analysis usually provides more complete expansions, though Theorem 5.7 does apply to a few situations not covered by it.

EXERCISE 22. Estimate asymptotically the coefficients of z^n in

$$\left(\sum \frac{z^n}{n!}\right)\left(\sum n! z^n\right), \left(\sum 2^n z^n\right)\left(\sum n z^{2^n}\right).$$

Tauberian theory. Tauberian methods apply to functions whose growth is known along the positive real line. The regularity conditions are in the form of additional assumptions on the coefficients (positivity or monotonicity) known under the name of Tauberian "side conditions". An insightful introduction to the subject may be found in Titchmarsh's book [16], and a detailed exposition in Postnikov's monograph [13]. We cite the most famous of all Tauberian theorems due to Hardy, Littlewood, and Karamata. Here, a function is said to be slowly varying at infinity iff, for any $c > 0$, one has $L(cx)/L(x) \to 1$ as $x \to +\infty$; examples of slowly varying functions are provided by powers of logarithms or iterated logarithms.

Theorem 5.8 (The HLK Tauberian theorem) *Let $f(z)$ be a power series with radius of convergence equal to 1, satisfying*

$$f(z) \sim \frac{1}{(1-z)^\alpha} L(\frac{1}{1-z}), \tag{5.32}$$

for some $\alpha \geq 0$ with L a slowly varying function. Assume that the coefficients $f_n = [z^n]f(z)$ are all non-negative (this is the "side condition"). Then

$$\sum_{k=0}^{n} f_k \sim \frac{n^\alpha}{\Gamma(\alpha+1)} L(n). \tag{5.33}$$

The conclusion (5.33) is consistent with what singularity analysis gives: Under the conditions, and if in addition analytic continuation is assumed, then

$$f_n \sim \frac{n^{\alpha-1}}{\Gamma(\alpha)} L(n), \tag{5.34}$$

which by summation yields the estimate (5.33).

It must be noted that a Tauberian theorem requires very little on the part of the function. However, it also gives less since the result it provides is valid in the more restrictive sense of mean values, or Cesàro averages. (However, if further regularity conditions on the f_n are injected, for instance monotonicity, then the conclusion of (5.34) can be deduced from (5.33) by purely elementary real analysis.) The method applies only to functions that are large enough at their singularity, and despite numerous efforts to improve the conclusions, it is the case that Tauberian theorems have little concrete to offer in terms of error estimates.

Appeal to a Tauberian theorem is justified when a function has, apart from the positive half line, a very irregular behaviour near its circle of convergence, for instance when each point of the unit circle is a singularity. (The function is then said to admit the unit circle as a natural boundary.) An interesting example of this situation is discussed by Greene and Knuth [8] who consider the function

$$f(z) = \prod_{k=1}^{\infty} (1 + \frac{z^k}{k}) \tag{5.35}$$

that is the EGF of permutations having cycles all of different lengths. A little computation shows that

$$\begin{aligned} \log \prod_{k=1}^{\infty} (1 + \frac{z^k}{k}) &= \sum_{k=1}^{\infty} \frac{z^k}{k} - \frac{1}{2} \sum_{k=1}^{\infty} \frac{z^{2k}}{k^2} + \frac{1}{3} \sum_{k=1}^{\infty} \frac{z^{3k}}{k^3} - \cdots \\ &\sim \log \frac{1}{1-z} - \gamma + o(1). \end{aligned}$$

(Only the last line requires some care, see [8].)

Thus, we have

$$f(z) \sim \frac{e^{-\gamma}}{1-z} \qquad \Longrightarrow \qquad \frac{1}{n}(f_0 + f_1 + \cdots + f_n) \sim e^{-\gamma},$$

by virtue of Theorem 5.7. In fact, Greene and Knuth were able to supplement this argument by a "bootstrapping" technique and show a stronger result, namely

$$f_n \to e^{-\gamma}.$$

EXERCISE 23. Find estimates for

$$[z^n] \prod_{k=1}^{\infty} (1 + \frac{z^k}{\sqrt{k}}).$$

Darboux's method. The method of Darboux requires, as regularity condition, that functions be smooth enough —i.e., sufficiently differentiable— on their circle of convergence. What lies at the heart of this many-facetted method is a simple relation between the smoothness of a function and the corresponding decrease of its Taylor coefficients.

Theorem 5.9 (Darboux's method) *Assume that $f(z)$ is continuous in the closed disk $|z| \leq 1$, and is in addition k times continuously differentiable ($k \geq 0$) on $|z| = 1$. Then*

$$[z^n]f(z) = o\left(\frac{1}{n^k}\right). \tag{5.36}$$

Proof. Start from Cauchy's coefficient formula

$$f_n = \frac{1}{2i\pi} \int_C f(z) \frac{dz}{z^{n+1}}.$$

Because of the continuity assumption, one may take as integration contour C the unit circle. Setting $z = e^{i\theta}$ yields the Fourier version of Cauchy's coefficient formula,

$$f_n = \frac{1}{2\pi} \int_0^{2\pi} f(e^{i\theta}) e^{-ni\theta}\, d\theta. \tag{5.37}$$

The integrand in (5.37) is strongly oscillating and the Riemann–Lebesgue lemma of classical analysis (see [16, p. 403]) shows that the integral giving f_n tends to 0 as $n \to \infty$.

This argument covers the case $k = 0$. The case of a general k is then derived through successive integrations by parts, as

$$[z^n]f(z) = \frac{1}{2\pi(in)^k}\int_0^{2\pi} f^{(k)}(e^{i\theta})e^{-ni\theta}\,d\theta.$$

□

Various consequences of Theorem 5.9 are given in reference texts also under the name of Darboux's method. See for instance [2, 8, 10, 18]. We shall only illustrate the mechanism by rederiving in this framework the analysis of the EGF of 2–regular graphs. Clearly, we have

$$\begin{aligned} f(z) &= \frac{e^{-z/2-z^2/4}}{\sqrt{1-z}} \\ &= \frac{e^{-3/4}}{\sqrt{1-z}} + e^{-3/4}\sqrt{1-z} + R(z). \end{aligned} \tag{5.38}$$

There $R(z)$ is the product of $(1-z)^{3/2}$ with a function analytic at $z = 1$ that is a rest in the Taylor expansion of $e^{-z/2-z^2/4}$. Thus, $R(z)$ is of class C^1, *i.e.*, continuously differentiable once. By Theorem 5.9, we have

$$[z^n]R(z) = o\left(\frac{1}{n}\right),$$

so that

$$[z^n]f(z) = e^{-3/4}\binom{n-1/2}{n} + e^{-3/4}\binom{n-3/2}{n} + o\left(\frac{1}{n}\right) = \frac{e^{-3/4}}{\sqrt{\pi n}} + o\left(\frac{1}{n}\right). \tag{5.39}$$

Darboux's method bears some resemblance to singularity analysis in that the estimates derive from translating error terms in expansions. Smoothness conditions, rather than plain order of growth information, are required by it. It is often applied in situations like in (5.38)–(5.39) to functions that are products of the type $h(z)(1-z)^\alpha$ with $h(z)$ analytic at 1, or combinations thereof. In such particular cases, Darboux's method is however subsumed by singularity analysis.

It is inherent to Darboux's method that it cannot be applied to functions whose expansions only involve terms that become infinite, while singularity analysis can. A clear example arises in the analysis of the common subexpression problem [7] where there occurs a function with a singular expansion of the form

$$\frac{1}{\sqrt{1-z}}\frac{1}{\sqrt{\log\frac{1}{1-z}}}\left[1 + \frac{c_1}{\log\frac{1}{1-z}} + \cdots\right].$$

EXERCISE 24. This exercise gives an instance where Darboux's method applies but not singularity analysis. Let

$$F_r(z) = \sum_{n=0}^{\infty} \frac{z^{2^n}}{(2^n)^r}.$$

Show that $F_0(z)$, and hence each F_r, is singular at every point of the unit circle. [Hint: examine the growth of F_0 near 2^nth roots of unity.]

Use Darboux's method to analyze asymptotically

$$[z^n]e^z F_5(z).$$

5.11 Notes

General surveys of asymptotic methods in enumeration have been given by Bender [1] and more recently Odlyzko [11]. A general reference to asymptotic analysis that has a remarkably concrete approach is De Bruijn's book [3]. Comtet's book [2] and Wilf's book [18] each devote a chapter to these questions.

This chapter is almost entirely based on the theory developed by Flajolet and Odlyzko in [5]. That theory itself draws its inspiration from classical analytic number theory, for instance the prime number theorem where similar constours are used (see the discussion in [5] for more closely related sources). Another area where Hankel contours are used is the inversion theory of integral transforms [4], in particular in the case of algebraic and logarithmic singularities.

As seen repeatedly in this chapter, singularity analysis applies to functions with a moderate (at most polynomial) rate of growth near their dominant singularities. The conditions are simply analytic continuation and validity of the singular expansions in the corresponding domains. Such conditions are automatically satisfied by a large number of functions given by explicit "analytic" expressions, most notably a large subset of the generating functions of elementary combinatorial structures defined by the basic constructions of sequence, set, and cycle. Thus singularity analysis ties well with the symbolic enumeration methods of Chapters 1–3.

The cases of molecules (studied in the last chapter), and of simple trees show that singularity analysis also applies to many functions defined by functional equations corresponding to recursively defined combinatorial structures. A detailed study of *singular functional equations* does permit in cases

like these to analyse coefficients of generating functions that are only defined *implicitly*. Many of these problems belong to an area of on-going research. Prototypes are to be found in Pólya's paper that contains numerous examples of nonplane trees, Odlyzko's analysis of balanced 2-3 Trees (we gave earlier a first approximation of the analysis), as well as in two problems to be examined later: the analysis of the height of binary trees in (a singular iteration problem), and the analysis of multidimensional search in k–d–trees and quad-trees (a singular differential system).

The application of the method of singularity analysis is rather mechanical since it corresponds to a direct term by term translation, once general analyticity conditions are recognized to hold. Salvy [14] has indeed succeeded in automating the analysis of a large class of generating functions in this way; related decision procedures in this context are also discussed in [6].

Darboux's method can often be employed as an alternative to singularity analysis. It is still by far the most widely used technique in the literature, though the direct mapping of asymptotic scales afforded by singularity analysis appears to us much more transparent. Darboux's method is well explained in the books by Comtet [2], Henrici [10], Olver [12], and Wilf [18]. Tauberian theory is treated in detail in Postnikov's monograph [13], with an excellent introduction to be found in Titchmarsh's book [16].

Finally, another range of asymptotic behaviour —that of very rapidly growing functions and entire functions— can be covered by the use of the *saddle point method*. The *Mellin transform* is at the origin of another range of techniques that apply to functions of a more "arithmetical nature". These topics are to be covered in the next two chapters.

Problems and Exercises

Singularity analysis permits to discuss combinatorial schemas and combinatorial sums with a high degree of generality, in pace with what done in Chapter 4 for meromorphic generating functions.

EXERCISE 25. Let f be algebraic–logarithmic. Discuss the exact and asymptotic forms of

$$[z^n]f(Y(z)) \qquad \text{and} \qquad [z^n]\frac{1}{1-Y(z)}f(Y(z)),$$

where $Y(z)$ is the "Cayley function", $Y = ze^Y$.

EXERCISE 26. Let $C(z) = (1-\sqrt{1-4z})/2$ be the Catalan generating function. Interpret combinatorially

$$f(z) = C(2zC(z))$$

as trees grafted on trees; show that $f(z)$ is the generating function of an unambiguous context–free language.

Determine the value of C in the formula

$$[z^n]f(z) \sim Cn^{-5/4}4^n.$$

(Asymptotic forms $n^{p/q}$ with various exponents $\frac{p}{q}$ with $q \neq 1, 2$ may thus arise in elementary combinatorics.)

EXERCISE 27. Let $y = z\phi(y)$ be a tree generating function. Determine asymptotically the mean number of trees in random ordered and unordered forest corresponding to the bivariate schemas

$$\frac{1}{1-uy(z)}, \quad e^{uy(z)}.$$

Bibliography

[1] BENDER, E. A. Asymptotic methods in enumeration. *SIAM Review 16*, 4 (Oct. 1974), 485–515.

[2] COMTET, L. *Advanced Combinatorics*. Reidel, Dordrecht, 1974.

[3] DE BRUIJN, N. G. *Asymptotic Methods in Analysis*. Dover, 1981. A reprint of the third North Holland edition, 1970 (first edition, 1958).

[4] DOETSCH, G. *Handbuch der Laplace Transformation, Vol. 1–3*. Birkhäuser Verlag, Basel, 1955.

[5] FLAJOLET, P., AND ODLYZKO, A. M. Singularity analysis of generating functions. *SIAM Journal on Discrete Mathematics 3*, 2 (1990), 216–240.

[6] FLAJOLET, P., SALVY, B., AND ZIMMERMANN, P. Automatic average–case analysis of algorithms. *Theoretical Computer Science 79*, 1 (Feb. 1991), 37–109.

[7] FLAJOLET, P., SIPALA, P., AND STEYAERT, J.-M. Analytic variations on the common subexpression problem. In *Automata, Languages, and Programming* (1990), M. S. Paterson, Ed., vol. 443 of *Lecture Notes in Computer Science*, pp. 220–234. Proceedings of the 17th ICALP Conference, Warwick, July 1990.

[8] GREENE, D. H., AND KNUTH, D. E. *Mathematics for the analysis of algorithms*. Birkhauser, Boston, 1981.

[9] HECKE, E. *Vorlesungen über die Theorie des algebraischen Zahlen*. 1923.

[10] HENRICI, P. *Applied and Computational Complex Analysis*. John Wiley, New York, 1977. 3 volumes.

[11] ODLYZKO, A. M. Asymptotic enumeration methods. Preprint, Mar. 1992. To appear as a chapter in the *Handbook of Combinatorics*, R. Graham, M. Grötschel and L. Lovász, Ed.

[12] OLVER, F. W. J. *Asymptotics and Special Functions*. Academic Press, 1974.

[13] POSTNIKOV, A. G. *Tauberian theory and its applications*, vol. 144 of *Proceedings of the Steklov institute of mathematics*. American Mathematical Society, 1980.

[14] SALVY, B. *Asymptotique automatique et fonctions génératrices*. Ph. D. thesis, École Polytechnique, 1991.

[15] STANLEY, R. P. Generating functions. In *Studies in Combinatorics, M.A.A. Studies in Mathematics, Vol. 17*. (1978), G.-C. Rota, Ed., The Mathematical Association of America, pp. 100–141.

[16] TITCHMARSH, E. C. *The Theory of Functions*, second ed. Oxford University Press, 1939.

[17] WHITTAKER, E. T., AND WATSON, G. N. *A Course of Modern Analysis*, fourth ed. Cambridge University Press, 1927. Reprinted 1973.

[18] WILF, H. S. *Generatingfunctionology*. Academic Press, 1990.

Contents

4 Complex Asymptotic Methods **1**

4.1 Introduction 2
4.2 Analytic and meromorphic functions 4
4.3 Singularities 8
4.4 The Exponential Growth Formula 12
4.5 Rational and meromorphic functions 15
4.6 Rational functions 16
4.7 Meromorphic Functions 19
4.8 Combinatorial schemas 23
4.9 Functional equations 25
4.10 Multiple singularities 32
4.11 Localization of zeros and poles 38
4.12 Notes 40
Problems and exercises 42
Bibliography 45

5 Singularity Analysis of GF's **47**

5.1 Introduction 48
5.2 The Gamma function 52
5.3 Asymptotics of standard coefficients 57
5.4 Hankel contours and transfers 65
5.5 Mappings between asymptotic scales 68
5.6 Explicit functions 69
5.7 Composition of singularities and sums 74
5.8 Implicit functions and functional equations 79
5.9 Multiple singularities 85
5.10 Tauberian theory and Darboux's method 87
5.11 Notes 93

Problems and exercises 95
Bibliography 97

Unité de recherche INRIA Rocquencourt
Domaine de Voluceau - Rocquencourt - B.P. 105 - 78153 Le Chesnay Cedex (France)

Unité de recherche INRIA Lorraine - Technopôle de Nancy-Brabois - Campus scientifique
615, rue du Jardin Botanique - B.P. 101 - 54602 Villers lès Nancy Cedex (France)
Unité de recherche INRIA Rennes - IRISA, Campus universitaire de Beaulieu 35042 Rennes Cedex (France)
Unité de recherche INRIA Rhône-Alpes 46, avenue Félix Viallet - 38031 Grenoble Cedex 1 (France)
Unité de recherche INRIA Sophia Antipolis - 2004, route des Lucioles - B.P. 93 - 06902 Sophia Antipolis Cedex (France)

Éditeur
INRIA - Domaine de Voluceau - Rocquencourt - B.P. 105 - 78153 Le Chesnay Cedex (France)

ISSN 0249 - 6399

RR - 2826