HAL
open science

A Mixed H_2/H_[infinite] Approach to Simultaneous Fault Detection and Control

M.J. Khosrowjerdi, Ramine Nikoukhah, N. Safari-Shad

To cite this version:

M.J. Khosrowjerdi, Ramine Nikoukhah, N. Safari-Shad. A Mixed H_2/H_[infinite] Approach to Simultaneous Fault Detection and Control. [Research Report] RT-0263, INRIA. 2002, pp.67. inria-00069911

HAL Id: inria-00069911

https://inria.hal.science/inria-00069911v1

Submitted on 19 May 2006

HAL is a multi-disciplinary open access archive for the deposit and dissemination of scientific research documents, whether they are published or not. The documents may come from teaching and research institutions in France or abroad, or from public or private research centers.

L'archive ouverte pluridisciplinaire **HAL**, est destinée au dépôt et à la diffusion de documents scientifiques de niveau recherche, publiés ou non, émanant des établissements d'enseignement et de recherche français ou étrangers, des laboratoires publics ou privés.

INSTITUT NATIONAL DE RECHERCHE EN INFORMATIQUE ET EN AUTOMATIQUE

A Mixed $\mathcal{H}_2/\mathcal{H}_\infty$ Approach to Simultaneous Fault Detection and Control

M. J. Khosrowjerdi — R. Nikoukhah — N. Safari-Shad

N° 0263

Juillet 2002

THÈME 4

Rapport technique

ISSN 0249-0803

A Mixed $\mathcal{H}_2/\mathcal{H}_\infty$ Approach to Simultaneous Fault Detection and Control

M. J. Khosrowjerdi* , R. Nikoukhah† , N. Safari-Shad‡

Thème 4 —Simulation et optimisation
de systèmes complexes
Projet Metalau

Rapport technique n° 0263 —Juillet 2002 —68 pages

Abstract: In this technical report, the problem of Simultaneous Fault Detection and Control (SFDC) is considered. This problem is reduced to a multiobjective optimization problem. We show that there exists a fundamental *separation theorem* allowing us to seperate this multiobjective problem into a control problem and a fault detection problem. Moreover, the SFDC problem is modeled in terms of a mixed $\mathcal{H}_2/\mathcal{H}_\infty$ optimization problem and a Riccati equation based solution leading to the design of controller/detector system of reasonable complexity is given. An application of our results is presented using the nonlinear *Ball and Beam system*.

Key-words: Simultaneous fault detection and control, fault detection, fault isolation, robust control, mixed $\mathcal{H}_2/\mathcal{H}_\infty$ control

* Department of Electrical Engineering, K.N.Toosi University of Technology, P. O. Box 16315-1355, Tehran, Iran 16314. Fax: +(98) 21-86-20-66, Email: mohammad-javad.khosrowjerdi@inria.fr

† INRIA, Rocquencourt, BP 105, 78153 Le Chesnay cedex, France, Fax: +(33) 1-39-63-57-86, Email: ramine.nikoukhah@inria.fr.

‡ Department of Electrical and Software Engineering, University of Wisconsin-Platteville, 1 University Plaza, Platteville, WI 53818, USA, Fax: +(1) 608-342-1566, Email: safarisn@uwplatt.edu

Unité de recherche INRIA Rocquencourt
Domaine de Voluceau, Rocquencourt, BP 105, 78153 Le Chesnay Cedex (France)
Téléphone : +33 1 39 63 55 11 —Télécopie : +33 1 39 63 53 30

Une Approche Mixte $\mathcal{H}_2/\mathcal{H}_\infty$ pour la Détection simultanée de Commande et de Défaut

Résumé : Dans ce rapport technique, on traite le problème de la détection simultanée de défaut et de commande (SFDC). Ce problème est réduit à un problème d'optimisation multi-objectifs. Nous montrons qu'il existe un théorème fondamental de séparation, qui nous permet la décomposition de ce problème multi-objectifs en un problème de commande et un problème de détection de défaut. D'ailleurs, le problème SFDC est modèle en termes de problème d'optimisation mixte $\mathcal{H}_2/\mathcal{H}_\infty$ et une solution de l'équation de Riccati menant à la conception d'un système détecteur/contrôleur de complexité raisonnable. Une application de nos résultats est pressée en utilisant un système non-linéaire *Ball & Beam*.

Mots-clés : Détection simultanée de défaut et de commande, détection de défaut, analyse de panne, commande robuste, contrôle mixte $\mathcal{H}_2/\mathcal{H}_\infty$

1 Introduction

Security and reliability are of paramount importance in closed-loop control systems. To assure reasonable measures of security and reliability, the need for fault detection techniques have long been recognized. Roughly speaking, a fault is any kind of malfunction in actual dynamics of the system leading to unacceptable performance, or even a catastrophe. Generally, fault detection consists in determining if a fault has occurred in the system. This provides a means to avoid major breakdowns and enable the system operator to take appropriate actions when neccessary. Application of fault detection techniques can be found in many high-performance systems such as aircraft control systems, nuclear power plants, chemical plants, industrial robots and so on. As a consequence, development of reliable techniques for fault detection has become an intensive field of research in control system theory. For an extensive bibliography and review of the literature, see Chen and Patton, 1999.

In most modern control systems, control unit and fault detection unit are both implemented using a single digital processor. So it is natural to take advantage of this fact to design the controller and the detector simultaneously to be implemented in a single program reducing software complexity. Simultaneous design can also be used to reduce controller/detector order by using the fact that both units use internally an estimator. We study this simultaneous design problem in this technical report.

Figure 1.1 shows the basic setup for the problem of Simultaneous Fault Detection and Control (SFDC). In this setup, G represents the open loop plant model and K is a controller/detector unit. Signals y_p, y_r, u, d, f and $\hat{f}$ are the plant output, the command input, the control input, the disturbance input, the fault and the estimate of the fault, respectively. Given the description of the plant G, the SFDC problem is that of finding a controller/detector K which in addition to stabilizing the closed-loop system, achieves the desired control and detection objectives, for example: robust stability is achieved, reference input y_r is tracked, the disturbance d is rejected for control, and the unknown fault f are reconstructed as $\hat{f}$ for detection purposes. The signal $\hat{f}$ is the used to decide on whether or not a fault has occurred and if possible, what kind of fault has occurred.

The SFDC problem has been studied during the last decade, see Nett *et al.*, 1990; Taylor and Morari, 1994, and Stoustrup *et al.*, 1997. In these works, the faults are regarded as disturbances which are to be estimated, and the SFDC problem is casted into a pure $\mathcal{H}_2$ or $\mathcal{H}_\infty$ standard problem which are solved by well-known techniques from $\mathcal{H}_2$, $\mathcal{H}_\infty$, μ-synthesis, and Youla parameterization theories.

In this report, the SFDC problem is shown to reduce to a multiobjective optimization problem. An important question which we will address is the following: *is it possible to separate this multiobjective problem into a pure control problem and a pure estimation problem?* The answer to this non trivial question leads to a *separation theorem* which is a generalization of result given in Tyler and Morari, 1994, and Stoustrup *et al.*, 1997, obtained using a more direct argument in this report.

An undesirable feature of standard approaches to the SFDC problem is that the same norm is used for control and fault detection. But, the $\mathcal{H}_2$ norm is a good measure for the detection performance and the $\mathcal{H}_\infty$ norm is suitable for controller design because of robustness considerations. The choice of differnt norms, in particular $\mathcal{H}_\infty$-norm for the control problem and $\mathcal{H}_2$-norm for the detection problem has also been suggested in Wu and Chen, 1996, and Wu, 1997.

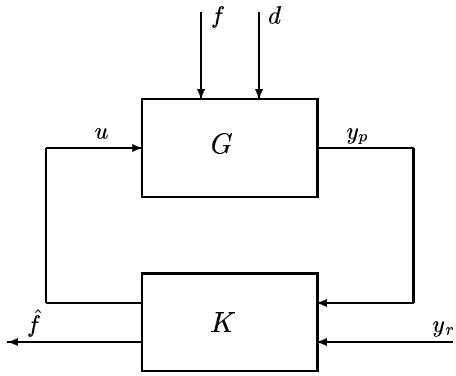

Figure 1.1: A basic setup for the SFDC problem

In this report we study this mixed $\mathcal{H}_2/\mathcal{H}_\infty$ SFDC problem using a similar method to that proposed by Bernstein and Haddad, 1989, to solve the mixed $\mathcal{H}_2/\mathcal{H}_\infty$ control problem. We give a Riccati based solution to this SFDC problem concluding to the design methodology for a controller/detector system of reasonable order. The resulting controller/detector system have both performance compared to these proposed in the literature.

The content of the technical report is as follows: After presenting notations and preliminaries in Section 2, the SFDC problem is formulated in Section 3 as a multiobjective problem. In Section 4, some results on the separation between fault detection and control are discussed. In Section 5, the SFDC problem is studied in pure $\mathcal{H}_2$ and $\mathcal{H}_\infty$ frameworks. The SFDC problem is formulated as a mixed $\mathcal{H}_2/\mathcal{H}_\infty$ problem and a Riccati equation approach is presented in Section 6. In Section 7, this method is applied to a case study using *the Ball and Beam system* and simulation results are presented. A solution to the mixed $\mathcal{H}_2/\mathcal{H}_\infty$ problem based on seperation theorem is presented in Appendix I. We have also developed Scilab programs which can be found in Appendix II.

2 Notations and Preliminaries

The notation used in this paper is fairly standard. For a given matrix A, A^T and Tr $[A]$ denote its transpose and trace, respectively. If A and B are symmetric matrices, $A \geq B$ (respectively, $A > B$) denotes $A - B$ positive semidefinite (respectivly, positive definite). Given real matrices A, $R = R^T$, and $Q = Q^T$, we say that X is the stabilizing solution of the Algebraic Riccati Equation (ARE) $A^T X + X A - X R X + Q = 0$ if X is real, symmetric, and $A - R X$ is Hurwitz.

A linear system G is represented by a quadraplet (A, B, C, D). We often use the notation

$$G := \left[\begin{array}{c|c} A & B \\ \hline C & D \end{array}\right].$$

The transfer function of G is $G(s) = D + C(sI - A)^{-1}B$ which is a matrix whose entries are proper rational functions of s.

The Hardy space $\mathcal{H}_2$ (respectively, $\mathcal{H}_\infty$) consists of matrix-valued functions that are square integrable (respectively, essentially bounded) on the imaginary axis with analytic extension into the right-half plane. The subspace of real-rational matrices in $\mathcal{H}_2$ (respectively, $\mathcal{H}_\infty$) is denoted by $\mathcal{RH}_2$ (respectively, $\mathcal{RH}_\infty$). $G(s)$ is called stable if it is in $\mathcal{RH}_\infty$. A stable $G(s)$ is not neccessarily in $\mathcal{RH}_2$, it is if $G(\infty) = 0$. G is called internally stable if A is Hurwitz. Internal stability of G implies stability of $G(s)$. The converse is true if G is stabilizable, i.e., (A, B) is stabilizable, and is detectable, i.e., (C, A) is detectable.

We denote $\mathcal{H}_2$ and $\mathcal{H}_\infty$ norms by $\|.\|_2$ and $\|.\|_\infty$. For a stable transfer function $G(s)$, we have

$$\|G(s)\|_\infty := \sup_\omega \bar{\sigma}(G(j\omega))$$

$$\|G(s)\|_2 := \left(\frac{1}{2\pi}\int_{-\infty}^{\infty} \mathrm{Tr}\,[G^*(j\omega)G(j\omega)]\,d\omega\right)^{\frac{1}{2}}$$

where $\bar{\sigma}(.)$ denotes the maximum singular value. The notation $\|.\|$ denotes an $\mathcal{H}_2$ or an $\mathcal{H}_\infty$ norm.

In this paper, for the sake of simplicity of notation, we drop the argument "s" in transfer functions, for example, we use G instead of $G(s)$.

The internal stability of the feedback system of Figure 3.4 plays an important role in proofs of theorems in this paper. Therefore, we now recall the conditions under which the system in Figure 3.4 is internally stable, where P and K are linear systems. The proof of lemmas can be found, for example, in Green and Limebeer, 1995. Linear systems P and K are defined as follows:

$$P = \begin{pmatrix} P_{11} & P_{12} \\ P_{21} & P_{22} \end{pmatrix} := \left[\begin{array}{c|cc} A & B_1 & B_2 \\ \hline C_1 & D_{11} & D_{12} \\ C_2 & D_{21} & 0 \end{array}\right], \qquad K := \left[\begin{array}{c|c} M & N \\ \hline L & H \end{array}\right].$$

Lemma 2.1 *The system in Figure 3.4 is internally stable if and only if the matrix*

$$\begin{pmatrix} A + B_2\,H\,C_2 & B_2\,L \\ N\,C_2 & M \end{pmatrix}$$

is Hurwitz.

In this case we say that K stabilizes P.

Lemma 2.2 *There exists a K stabilizing P in Figure 3.4 if and only if P is stabilizable and detectable.*

Lemma 2.3 *Suppose K and P are stabilizable and detectable. Then K stabilizes P if and only if the nine transfer functions mapping w, v_1, and v_2 to z, y and u in Figure 3.4 are all in $\mathcal{RH}_\infty$ (are stable).*

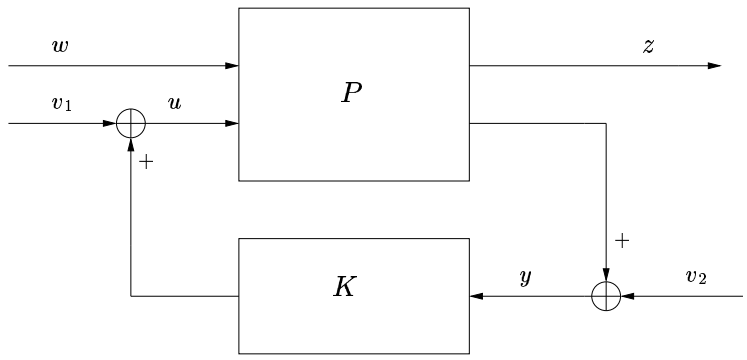

Figure 2.1: A standard feedback configuration

The nine transfer functions in Lemma 2.3 are given below

$$
\begin{aligned}
u &= K(I - P_{22}K)^{-1} P_{21}\, w + (I + K\,(I - P_{22}\,K)^{-1}\, P_{22})\, v_1 + \\
&\quad K(I - P_{22}K)^{-1}\, v_2 \\
y &= (I - P_{22}\,K)^{-1}\, P_{21}\, w + (I - P_{22}\,K)^{-1}\, P_{22}\, v_1 + (I - P_{22}\,K)^{-1}\, v_2 \\
z &= (P_{11} + P_{12}\,K\,(I - P_{22}\,K)^{-1}\, P_{21})\, w + \\
&\quad P_{12}\,(I + K\,(I - P_{22}\,K)^{-1}\, P_{22})\, v_1 + P_{12}\,K\,(I - P_{22}\,K)^{-1}\, v_2
\end{aligned}
$$

Lemma 2.4 *K stabilizes P if and only if it stabilizes P_{22}.*

According to Lemma 2.4, if P can be stabilized by K then the system given in Figure 3.4 is internally stable if and only if the four transfer function $(I - P_{22}\,K)^{-1}\, P_{22}$, $K\,(I - P_{22}\,K)^{-1}$, $(I - P_{22}\,K)^{-1}$, and $K\,(I - P_{22}\,K)^{-1}\, P_{22}$ are all in $\mathcal{RH}_\infty$. As a special case, if $P_{22} = 0$, K must be in $\mathcal{RH}_\infty$.

3 Problem formulation

The SFDC problem is that of finding a controller/detector K which achieves specified control and detection objectives. In this section, we show that the SFDC problem can be formulated as a multi-objective optimization problem.

Consider an input-output transfer function representation of G in Figure 1.1 given by

$$y_p = G_u\, u + G_f\, f + G_d\, d \tag{3.1}$$

where $y_p \in \mathbb{R}^{p_1}$, $u \in \mathbb{R}^m$, $f \in \mathbb{R}^q$ and $d \in \mathbb{R}^l$ are respectively the measured output, the control input, the fault and the disturbance. G_u, G_f, and G_d are multivariable transfer functions with appropriate dimensions. The order of the transfer function $G = \begin{pmatrix} G_u & G_f & G_d \end{pmatrix}^T$ is denoted by n_p.

The controller/detector K must be able to stabilize the closed-loop system, and achieve robustness and performance properties, for example as shown in Figure 3.1, to track command input $y_r \in \mathbb{R}^{p_2}$ and reject disturbance input $d \in \mathbb{R}^l$. These objectives can be described by a control performance measure $z_c \in \mathbb{R}^{m_c}$; foe example

$$z_c = W_{c_1}\,(y_p - y_r) + W_{c_2}\,u\,, \tag{3.2}$$

where W_{c_1} and W_{c_2} are stable transfer functions having orders n_{c_1} and n_{c_2}, respectively. There weightings are chosen appropriately for control performance.

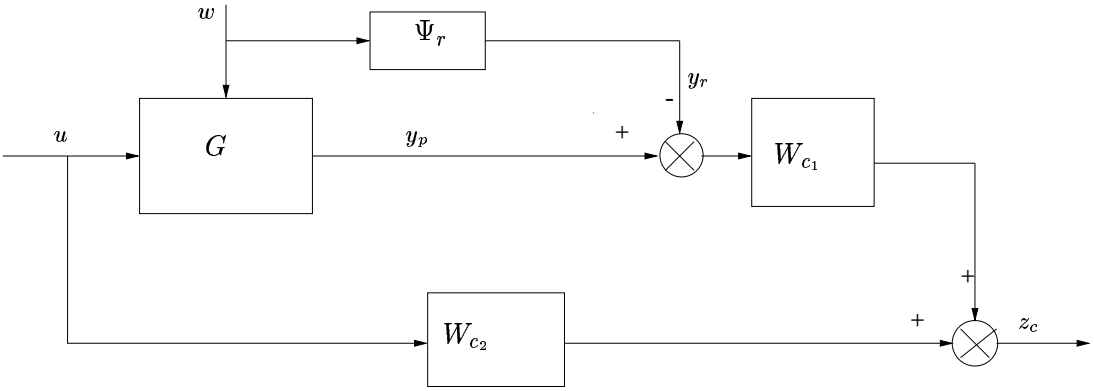

Figure 3.1: A set-up for detection objective

To achieve the detection objective, the controller/detector K generates a signal $\hat{f} \in \mathbb{R}^q$ for reconstructing the fault f. This objective is often described in terms of a detection performance measure $z_d \in \mathbb{R}^{m_d}$. In general, the signal $\hat{f}$ should track the fault f, and an appropriate choice of z_d is

$$z_d = W_{d_1}\,(W_{d_2}\,f - \hat{f}) \tag{3.3}$$

where W_{d_1} and W_{d_2} are stable transfer function having orders n_{d_1} and W_{d_2}, respectively. These weighting are chosen appropriately for detection performance, see Figure 3.2

Using the above, we can define an augmented dynamical system shown in Figure 3.3 as follows

$$P : \begin{cases} z_c = P_{c_{11}}\,w + P_{c_{12}}\,u \\ z_d = P_{d_{11}}\,w + P_{d_{12}}\,\hat{f} \\ y = P_{21}\,w + P_{22}\,u \end{cases}$$

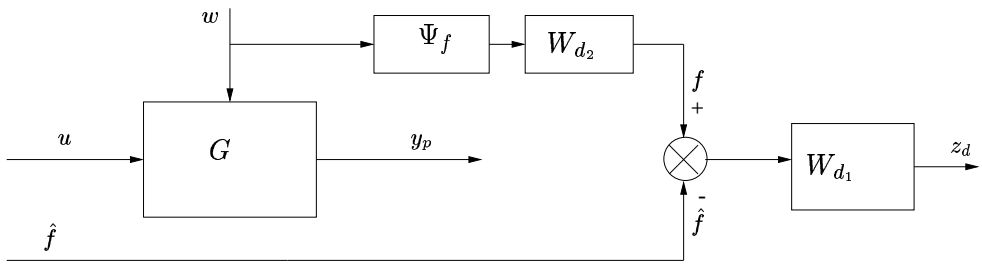

Figure 3.2: A set-up for detection objective

where $w = \begin{pmatrix} f^T & d^T & {y_r}^T \end{pmatrix}^T \in \mathbb{R}^r$, $y = \begin{pmatrix} y_p^T & y_r^T \end{pmatrix}^T \in \mathbb{R}^p$ $(p = p_1 + p_2)$ and

$$P_{c_{11}} = \begin{pmatrix} W_{c_1} G_f & W_{c_1} G_d & -W_{c_1} \end{pmatrix}, \quad P_{c_{12}} = W_{c_1} G_u + W_{c_2}$$

$$P_{d_{11}} = \begin{pmatrix} W_{d_1} W_{d_2} & 0 & 0 \end{pmatrix}, \quad P_{d_{12}} = -W_{d_1}$$

$$P_{21} = \begin{pmatrix} G_f & G_d & 0 \\ 0 & 0 & I \end{pmatrix}, \quad P_{22} = \begin{pmatrix} G_u \\ 0 \end{pmatrix}$$

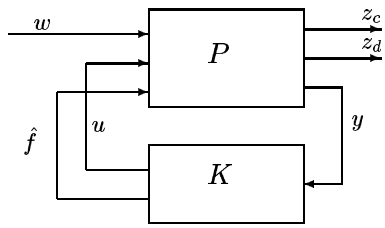

Figure 3.3: A standard setup for the SFDC problem

In Figure 3.3, internal stability conditions require that the transfer function $K = \begin{pmatrix} K_1^T & K_2^T \end{pmatrix}^T$ be in $\mathcal{S}_1$, where

$$\mathcal{S}_1 = \{K \mid \text{Closed-loop system in Figure 3.3 is internally stable.}\}$$

K_1 and K_2 denote the transfer functions of the controller and the detector, respectively. The definition of $\mathcal{S}_1$ and Lemma 2.4 imply that the four transfer functions $(I - \tilde{P}_{22}K)^{-1}\tilde{P}_{22}$, $K(I - \tilde{P}_{22}K)^{-1}$, $(I - \tilde{P}_{22}K)^{-1}$ and $K\,(I - \tilde{P}_{22}K)^{-1}\,\tilde{P}_{22}$ are all in $\mathcal{RH}_\infty$, where $\tilde{P}_{22} = \begin{pmatrix} P_{22} & 0 \end{pmatrix}$. To achieve the control and detection objectives we need that a suitable norm of the transfer functions T_1 and T_2

given by

$$T_1(K_1) = P_{c_{11}} + P_{c_{12}} K_1 (I - P_{22} K_1)^{-1} P_{21}$$
$$T_2(K_1, K_2) = P_{d_{11}} + P_{d_{12}} K_2 (I - P_{22} K_1)^{-1} P_{21}$$

be minimized (or be smaller than prespecified levels) where $T_1(K_1)$ and $T_2(K_1, K_2)$ as shown in Figure 6.4 ($T = \begin{pmatrix} T_1^T & T_2^T \end{pmatrix}^T$), denote the closed-loop transfer functions from w to z_c and z_d, respectively. It is interesting to note that T_1 is only a function of K_1, whereas T_2 is both a function of K_1 and K_2.

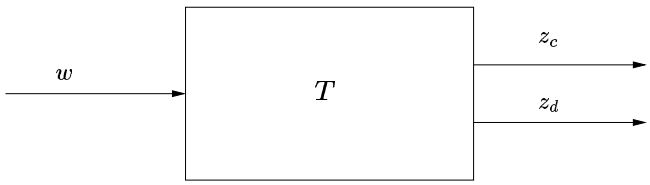

Figure 3.4: Closed-loop sytem

We are now ready to describe the SFDC problem as the following multiobjective problem.

Problem 3.1 *Consider the system in Figure 3.3. Given $\gamma_1, \gamma_2 > 0$, find a transfer function $K = \begin{pmatrix} K_1^T & K_2^T \end{pmatrix}^T \in \mathcal{S}_1$ that achieves*

$$\|T_1(K_1)\| \leq \gamma_1, \quad \|T_2(K_1, K_2)\| \leq \gamma_2$$

Solving this problem involves various specific questions: *is it possible to separate this multiobjective problem into a control problem and an estimation problem?* and *how to achieve the least upper bounds γ_1 and γ_2 ?* In the following sections, we will address these questions.

4 Separation result

In this section, we obtain fundamental results concerning the separability of the multiobjective problem. These results presented in this section are completely independent of the choice of the norm used.

As mentioned before, T_1 is only a function of K_1, whereas T_2 is both a function of K_1 and K_2. This motivates a two-step design approach as shown in Figure 4.1. As indicated in Figure 4.1, we first design a controller $\mathcal{K}_1$ that achieves $\|T_1(\mathcal{K}_1)\| \leq \gamma_1$, close the loop with this controller, then construct a fault detector $\mathcal{K}_2$ that achieves

$$\|T(\mathcal{K}_1, \mathcal{K}_2)\| = \|P_{d_{11}} + P_{d_{12}} \mathcal{K}_2 \hat{P}_{21}\| \leq \gamma_2$$

where the transfer function $\hat{P}_{21} = (I - P_{22} \mathcal{K}_1)^{-1} P_{21}$.

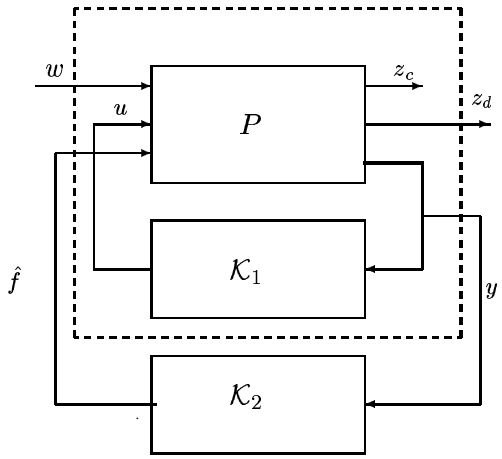

Figure 4.1: A sub-optimal approach

In this case, according to Lemma 2.4, the internal stability conditions require that detector $\mathcal{K}_2$ be in $\mathcal{RH}_\infty$. But this additional constraint is not requires in the one-step design approach shown in Figure 3.3. Thus, *the configuration illustrated in Figure 4.1 is not equivalent to that of Figure 3.3*. Therefore, this two-step design approach as shown in Figure 4.1 does not construct an appropriate setup for the design of controller and fault detector. The following theorem, however, shows that a separation result does exist for the setup of Figure 3.3.

Theorem 4.1 *Suppose* $\hat{K} = \begin{pmatrix} \hat{K}_1^T & \hat{K}_2^T \end{pmatrix}^T$ *is in* $\mathcal{S}_1$. *For any controller* $\mathcal{K}_1$ *stabilizing* P_{22}, *there exists a fault detector* $\mathcal{K}_2$ *that achieves*

$$T_2(\mathcal{K}_1, \mathcal{K}_2) = T_2(\hat{K}_1, \hat{K}_2)$$

where $\mathcal{K} = \begin{pmatrix} \mathcal{K}_1^T & \mathcal{K}_2^T \end{pmatrix} \in \mathcal{S}_1$.

Proof:
Let

$$\mathcal{K}_2 = \hat{K}_2\,(I - P_{22}\,\hat{K}_1)^{-1}\,(I - P_{22}\,\mathcal{K}_1).$$

Since $\hat{K} = \begin{pmatrix} \hat{K}_1^T & \hat{K}_2^T \end{pmatrix}^T \in \mathcal{S}_1$ and $\mathcal{K}_1$ stabilizes P_{22}, $\hat{K}_2\,(I - P_{22}\,\hat{K}_1)^{-1}$ and $(I - P_{22}\,\mathcal{K}_1)^{-1}$ are in $\mathcal{RH}_\infty$. Moreover, the definition of $\mathcal{K}_2$ implies that $\mathcal{K}_2\,(I - P_{22}\,\mathcal{K}_1)^{-1} \in \mathcal{RH}_\infty$ and

$$\begin{aligned} T_2(\mathcal{K}_1, \mathcal{K}_2) &= P_{d_{11}} + P_{d_{12}}\,\mathcal{K}_2\,(I - P_{22}\,\mathcal{K}_1)^{-1}\,P_{21} \\ &= P_{d_{11}} + P_{d_{12}}\,\hat{K}_2\,(I - P_{22}\,\hat{K}_1)^{-1}\,(I - P_{22}\,\mathcal{K}_1)\,(I - P_{22}\,\mathcal{K}_1)^{-1}\,P_{21} \\ &= P_{d_{11}} + P_{d_{12}}\,\hat{K}_2\,(I - P_{22}\,\hat{K}_1)^{-1}\,P_{21} \\ &= T_2(\hat{K}_1, \hat{K}_2). \end{aligned}$$

This proves the theorem.

□

This result demonstrates that the performance of the detector is independent of the choice of the controller. Theorem 4.1 however does not give a constructive design method.

Consider now the set-up shown in Figure 4.2. Here, the control input u is directly accessible to the fault detector $\tilde{\mathcal{K}}_2$. The motivation for this configuration is the observer-based fault detection techniques which use available information in both the control input u and the output y to detect faults. The idea here is to first design a controller $\mathcal{K}_1$ that achieves $\|T_1(\mathcal{K}_1)\| \leq \gamma_1$, then a fault detector $\tilde{\mathcal{K}}_2$ is determined such that $\|\mathcal{F}_2(\mathcal{K}_1, \tilde{\mathcal{K}}_2)\| \leq \gamma_2$ where $\mathcal{F}_2(\mathcal{K}_1, \tilde{\mathcal{K}}_2)$ is the closed-loop transfer function from w to z_d in Figure 4.2, i.e.,

$$\mathcal{F}_2(\mathcal{K}_1, \tilde{\mathcal{K}}_2) = P_{d_{11}} + P_{d_{12}} \tilde{\mathcal{K}}_2 \begin{pmatrix} \mathcal{K}_1 \\ I \end{pmatrix} \hat{P}_{21}.$$

The resulting controller/detector $(\mathcal{K}_1, \tilde{\mathcal{K}}_2)$ is in $\mathcal{S}_2$ where

$$\mathcal{S}_2 = \{(\mathcal{K}_1, \tilde{\mathcal{K}}_2) \mid \text{ Closed-loop system in Fig. 4.2 is internally stable.}\}$$

The definition of $\mathcal{S}_2$ implies that $\tilde{\mathcal{K}}_2$ must be stable.

We are now ready to present a *Separation Theorem* for the system in Figure 4.2:

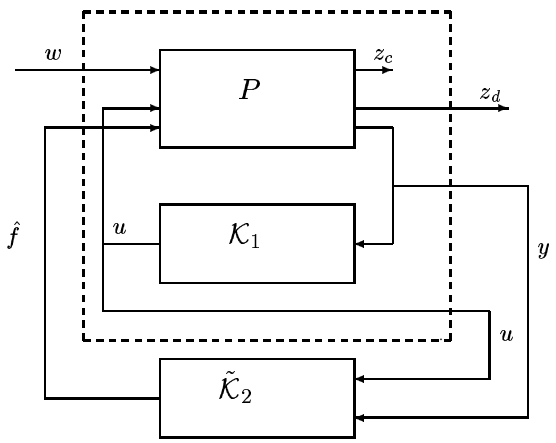

Figure 4.2: Set-up for two-step design approach

Theorem 4.2 *Consider the system in Figure 3.3. Suppose* $K = \begin{pmatrix} K_1^T & K_2^T \end{pmatrix}^T \in \mathcal{S}_1$. *For any controller* $\mathcal{K}_1$ *stabilizing* P_{22}, *there exists a fault detector* $\tilde{\mathcal{K}}_2$ *such that*

$$\mathcal{F}_2(\mathcal{K}_1, \tilde{\mathcal{K}}_2) = T_2(K_1, K_2)$$

where $(\mathcal{K}_1, \tilde{\mathcal{K}}_2) \in \mathcal{S}_2$*. Conversely, consider the setup illustrated in Figure 4.2. Suppose* $(\mathcal{K}_1, \tilde{\mathcal{K}}_2) \in \mathcal{S}_2$*. For any controller* K_1 *stabilizing* P_{22}*, there exists a fault detector* K_2 *such that*

$$T_2(K_1, K_2) = \mathcal{F}_2(\mathcal{K}_1, \tilde{\mathcal{K}}_2)$$

where $\begin{pmatrix} K_1^T & K_2^T \end{pmatrix}^T \in \mathcal{S}_1$*.*

Proof:

Since $K = \begin{pmatrix} K_1^T & K_2^T \end{pmatrix}^T \in \mathcal{S}_1$, $K_2\,(I - P_{22}\,K_1)^{-1} \in \mathcal{RH}_\infty$ and $K_2\,(I - P_{22}\,K_1)^{-1}\,P_{22} \in \mathcal{RH}_\infty$. Let

$$\tilde{\mathcal{K}}_2 = K_2(I - P_{22}K_1)^{-1} \begin{pmatrix} -P_{22} & I \end{pmatrix}.$$

Then $\tilde{\mathcal{K}}_2 \in \mathcal{RH}_\infty$ and

$$\begin{aligned}
\mathcal{F}_2(\mathcal{K}_1, \tilde{\mathcal{K}}_2) &= P_{d_{11}} + P_{d_{12}}\tilde{\mathcal{K}}_2 \begin{pmatrix} \mathcal{K}_1 \\ I \end{pmatrix} (I - P_{22}\,\mathcal{K}_1)^{-1} P_{21} \\
&= P_{d_{11}} + P_{d_{12}}\,K_2(I - P_{22}\,K_1)^{-1} \begin{pmatrix} -P_{22} & I \end{pmatrix} \begin{pmatrix} \mathcal{K}_1 \\ I \end{pmatrix} (I - P_{22}\,\mathcal{K}_1)^{-1} P_{21} \\
&= P_{d_{11}} + P_{d_{12}}\,K_2\,(I - P_{22}\,K_1)^{-1}\,P_{21} \\
&= T_2(K_1, K_2).
\end{aligned}$$

Conversely, let

$$K_2 = \tilde{\mathcal{K}}_2 \begin{pmatrix} \mathcal{K}_1 \\ I \end{pmatrix},$$

then

$$\begin{aligned}
T_2(K_1, K_2) &= P_{d_{11}} + P_{d_{12}}\,K_2\,(I - P_{22}\,K_1)^{-1}\,P_{21} \\
&= P_{d_{11}} + P_{d_{12}}\,\tilde{\mathcal{K}}_2 \begin{pmatrix} \mathcal{K}_1 \\ I \end{pmatrix} (I - P_{22}\,K_1)^{-1}\,P_{21} \\
&= \mathcal{F}_2(\mathcal{K}_1, \tilde{\mathcal{K}}_2).
\end{aligned}$$

This proves the theorem.

□

Theorem 4.2 and the following corollary allow us to seperate the SFDC problem into a control problem and a fault detection problem

Corollary 4.1 *Consider the system depicted in Figure 4.2. Suppose that the controller* $\mathcal{K}_1$ *and the fault detector* $\tilde{\mathcal{K}}_2$ *achieve detection performance* $\mathcal{F}_2(\mathcal{K}_1, \tilde{\mathcal{K}}_2)$ *where* $(\mathcal{K}_1, \tilde{\mathcal{K}}_2) \in \mathcal{S}_2$ *. Then, for any controller* $\hat{\mathcal{K}}_1$ *stabilizing* P_{22}*, there exits a detector* $\hat{\tilde{\mathcal{K}}}_2$ *independent of* $\hat{\mathcal{K}}_1$ *such that*

$$\mathcal{F}_2(\hat{\mathcal{K}}_1, \hat{\tilde{\mathcal{K}}}_2) = \mathcal{F}_2(\mathcal{K}_1, \tilde{\mathcal{K}}_2)$$

where $(\hat{\mathcal{K}}_1, \hat{\tilde{\mathcal{K}}}_2) \in \mathcal{S}_2$*.*

Proof:
Let

$$\hat{\tilde{\mathcal{K}}}_2 = \tilde{\mathcal{K}}_2 \begin{pmatrix} \mathcal{K}_1 \\ I \end{pmatrix} (I - P_{22}\,\mathcal{K}_1)^{-1} \begin{pmatrix} -P_{22} & I \end{pmatrix}.$$

Since $(\mathcal{K}_1, \tilde{\mathcal{K}}_2) \in \mathcal{S}_2$, it is striaghtforward to verify that $\hat{\tilde{\mathcal{K}}}_2 \in \mathcal{RH}_\infty$. Also

$$\begin{aligned}
\mathcal{F}_2(\hat{\mathcal{K}}_1, \hat{\tilde{\mathcal{K}}}_2) &= P_{d_{11}} + P_{d_{12}}\,\hat{\tilde{\mathcal{K}}}_2 \begin{pmatrix} \hat{\mathcal{K}}_1 \\ I \end{pmatrix} (I - P_{22}\,\hat{\mathcal{K}}_1)^{-1} P_{21} \\
&= P_{d_{11}} + P_{d_{12}}\,\tilde{\mathcal{K}}_2 \begin{pmatrix} \mathcal{K}_1 \\ I \end{pmatrix} (I - P_{22}\mathcal{K}_1)^{-1} \begin{pmatrix} -P_{22} & I \end{pmatrix} \begin{pmatrix} \hat{\mathcal{K}}_1 \\ I \end{pmatrix} (I - P_{22}\hat{\mathcal{K}}_1)^{-1} P_{21} \\
&= P_{d_{11}} + P_{d_{12}}\,\tilde{\mathcal{K}}_2 \begin{pmatrix} \mathcal{K}_1 \\ I \end{pmatrix} (I - P_{22}\,\mathcal{K}_1)^{-1} P_{21} \\
&= \mathcal{F}_2(\mathcal{K}_1, \tilde{\mathcal{K}}_2)
\end{aligned}$$

This proves the corollary.

□

By choosing appropriate norms, the separation theorem as indicated in Figure 4.2 provides a solution to the SFDC problem, but it can be shown that the order of the controller/detector $(\mathcal{K}_1, \tilde{\mathcal{K}}_2)$ is $(n_p + n_c) + (n_p + n_d)$ where $n_c = n_{c_1} + n_{c_2}$ and $n_d = n_{d_1} + n_{d_2}$, which is very high order for most practical applications, see Appendix I.

5 Single objective formulation

Recall that the SFDC problem is a multiobjective problem presented as Problem 3.1. In this section, using the fact that

$$\left\| \begin{pmatrix} T_1(K_1) \\ T_2(K_1, K_2) \end{pmatrix} \right\| < \gamma \quad \Longrightarrow \quad \|T_1(K_1)\| < \gamma \quad \text{and} \quad \|T_2(K_1, K_2)\| < \gamma.$$

we reformulate this multiobjective problem as a standard problem to which we can apply robust control theory techniques. This approach which in general is conservative has been proposed in Tyler and Morari, 1994; Stoustrup *et al.*, 1997.

Problem 5.1 *Consider the system depicted in Figure 5.1 where $z = \begin{pmatrix} z_c^T & z_d^T \end{pmatrix}^T \in \mathbb{R}^{m_c + m_d}$ is the new performance measure, $\tilde{u} = \begin{pmatrix} u^T & \hat{f}^T \end{pmatrix}^T \in \mathbb{R}^{m+q}$ is the new control input, and the plant $\tilde{P}$ is defined as follows*

$$\tilde{P}_{11} = \begin{pmatrix} P_{c_{11}} \\ P_{d_{11}} \end{pmatrix}, \quad \tilde{P}_{12} = \begin{pmatrix} P_{c_{12}} & 0 \\ 0 & P_{d_{12}} \end{pmatrix}, \quad \tilde{P}_{21} = P_{21}, \quad \tilde{P}_{22} = \begin{pmatrix} P_{22} & 0 \end{pmatrix}.$$

Given $\gamma > 0$, find a transfer function $K \in \mathcal{S}_1$ such that

$$\|T(K)\|_2 \le \gamma \quad \textit{or} \quad \|T(K)\|_\infty \le \gamma$$

where

$$\begin{aligned} T(K) &= \begin{pmatrix} T_1(K_1) \\ T_2(K_1, K_2) \end{pmatrix} \\ &= \tilde{P}_{11} + \tilde{P}_{12}\, K\, (I - \tilde{P}_{22}\, K)^{-1}\, \tilde{P}_{21} \end{aligned}$$

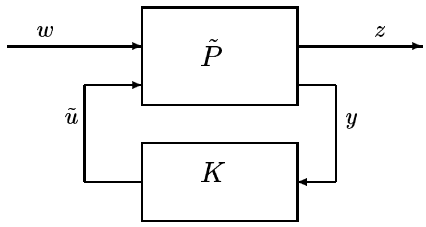

Figure 5.1: Standard $\mathcal{H}_2$ and $\mathcal{H}_\infty$ problems

These standard problems can be solved using the well-known techniques from $\mathcal{H}_2$ and $\mathcal{H}_\infty$ theories.

As stated before, this approach can introduce conservatism. Specifically, if one can find a controller/detector $K = \begin{pmatrix} K_1^T & K_2^T \end{pmatrix}^T$ that achieves $\|T(K)\| \le \gamma$, we have , $\|T_1(K_1)\| \le \gamma$ and $\|T_2(K_1, K_2)\| \le \gamma$. However, the converse may not be true. Thus, an important question is under what condition *this single objective formulation is equivalent to the multiobjective problem*. It turns out that the equivalence holds in the $\mathcal{H}_2$ case. The following theorem is a generalization of result given in Tyler and Morari, 1994.

Theorem 5.1 *Suppose $\hat{K} = \begin{pmatrix} \hat{K}_1^T & \hat{K}_2^T \end{pmatrix}^T \in \mathcal{S}_1$ is an optimal solution to the $\mathcal{H}_2$ standard problem illustrated in Figure 5.1, i.e., it is a solution of*

$$\min \left\| \begin{pmatrix} T_1(K_1) \\ T_2(K_1, K_2) \end{pmatrix} \right\|_2 \tag{5.1}$$

where min *is taken over the set of all $K = \begin{pmatrix} K_1^T & K_2^T \end{pmatrix}^T \in \mathcal{S}_1$. Then*

$$\begin{aligned} \|T_1(\hat{K}_1)\|_2 &= \min_{K_1} \|T_1(K_1)\|_2, \\ \|T_2(\hat{K}_1, \hat{K}_2)\|_2 &= \min_{K_1, K_2} \|T_2(K_1, K_2)\|_2 \end{aligned} \tag{5.2}$$

where the first minimum in (5.2) is taken over the set of all K_1 stabilizing P_{22} and the second over the set $K = \begin{pmatrix} K_1^T & K_2^T \end{pmatrix}^T \in \mathcal{S}_1$.

So $\hat{K}$ is a solution of the multiobjective $\mathcal{H}_2$ problem illustrated in Figure 3.3.

Proof:

Suppose that there exist a $\tilde{K}_1$ such that

$$\left\| T_1(\tilde{K}_1) \right\|_2 < \left\| T_1(\hat{K}_1) \right\|_2. \tag{5.3}$$

Thanks to Theorem 4.1, there exists a $\tilde{K}_2$ such that $\tilde{K} = \begin{pmatrix} K_1^T & K_2^T \end{pmatrix}^T \in \mathcal{S}_1$ and

$$\|T_2(\tilde{K}_1, \tilde{K}_2)\|_2 = \min_{K_1, K_2} \|T_2(K_1, K_2)\|_2.$$

Thus

$$\|T_2(\tilde{K}_1, \tilde{K}_2)\|_2 \leq \|T_2(\hat{K}_1, \hat{K}_2)\|_2. \tag{5.4}$$

Now consider the following lemma.

Lemma 5.1 *Let U_1, U_2, V_1, and V_2 be $\mathcal{H}_2$ transfer functions such that*

$$\|U_1\|_2 < \|V_1\|_2, \quad \|U_2\|_2 \leq \|V_2\|_2.$$

Then

$$\left\| \begin{pmatrix} U_1 \\ U_2 \end{pmatrix} \right\|_2 < \left\| \begin{pmatrix} V_1 \\ V_2 \end{pmatrix} \right\|_2.$$

Thanks to Lemma 5.1, from the inequalities (5.3) and (5.4) we obtain that

$$\left\| \begin{pmatrix} T_1(\tilde{K}_1) \\ T_2(\tilde{K}_1, \tilde{K}_2) \end{pmatrix} \right\|_2 < \left\| \begin{pmatrix} T_1(\hat{K}_1) \\ T_2(\hat{K}_1, \hat{K}_2) \end{pmatrix} \right\|_2 = \min_K \left\| \begin{pmatrix} T_1(K_1) \\ T_2(K_1, K_2) \end{pmatrix} \right\|_2$$

which is a contradiction.

□

If we replace the $\mathcal{H}_2$ norm by the $\mathcal{H}_\infty$ norm, Lemma 5.1 does not hold. So an $\mathcal{H}_\infty$ standard problem approach does not give a solution to the multiobjective $\mathcal{H}_\infty$ problem, and thus can be conservative. To solve the multiobjective $\mathcal{H}_\infty$ problem, when the open loop system is stable, a method based on Youla parameterization has been proposed in Stoustrup and Niemann, 1996; Stoustrup *et al.*, 1997. This method is based on the fact that according to the definition of the set $\mathcal{S}_1$, we can immediately see that

$$K(I - \tilde{P}_{22}K)^{-1} \in \mathcal{RH}_\infty$$

By assuming that $\tilde{P}_{22} \in \mathcal{RH}_\infty$ (the open-loop system is stable), it is possible to define the transfer function $Q \in \mathcal{RH}_\infty$ as follows

$$Q = K(I - \tilde{P}_{22}K)^{-1}$$

which is a Linear Fractional Transformation (LFT) of K. Using Youla parameterization, all stabilizing controllers K can be obtained by

$$K = Q(I + \tilde{P}_{22}\,Q)^{-1}$$

Thus, the multiobjective $\mathcal{H}_\infty$ problem can be expressed as two independent model-matching problems with respect to $Q = \begin{pmatrix} Q_1^T & Q_2^T \end{pmatrix}^T$ as follows

Problem 5.2 *Consider the block diagram illustrated in Figure 3.3. Given $\gamma_1, \gamma_2 \geq 0$. Find the transfer functions Q_1 and Q_2 in $\mathcal{R}H_\infty$ such that*

$$\begin{aligned} \|T_1(Q_1)\|_\infty &= \|P_{c_{11}} + P_{c_{12}}\, Q_1\, P_{21}\|_\infty \leq \gamma_1 \\ \|T_2(Q_2)\|_\infty &= \|P_{d_{11}} + P_{d_{12}}\, Q_2\, P_{21}\|_\infty \leq \gamma_2. \end{aligned}$$

when the open loop system is stable, this method does present a solution to the multiobjective $\mathcal{H}_\infty$ problem. But the order of resulting K tends to get very high as the order of the generalized plant increases. As mentioned in Stoustrup, 1996, *the proposed method is unrealistic without model reduction*.

In the next section, we propose a method which not only leads to a controller/detector of reasonable complexity but also uses different norms for the two objectives. Indeed, an undesirable feature of pure $\mathcal{H}_2$ or $\mathcal{H}_\infty$ approaches to the SFDC problem is that the same norm is used for fault detection and control. But the $\mathcal{H}_\infty$ norm is suitable for controller design because of the robustness considerations, and $\mathcal{H}_2$ norm for detection performance.

6 A mixed $\mathcal{H}_2/\mathcal{H}_\infty$ approach

In this section, the SFDC problem is modeled in terms of a mixed $\mathcal{H}_2/\mathcal{H}_\infty$ optimization problem. The result given in this section provides a constructive method for obtaining a solution leading to the design of a controller/detector system of reasonable complexity. This mixed $\mathcal{H}_2/\mathcal{H}_\infty$ problem can be expressed as follows.

Problem 6.1 *Consider the system in Figure 3.3. Given $\gamma > 0$, find $K \in \mathcal{S}_1$ minimizing*

$$J(K_1, K_2) = \|T_2(K_1, K_2)\|_2^2$$

subject to

$$\|T_1(K_1)\|_\infty \leq \gamma.$$

J is called the $\mathcal{H}_2$ detection performance.

This problem can be solved using a method based on the separation theorem and standard $\mathcal{H}_\infty$ and $\mathcal{H}_2$ methods. As mentioned before, the result is a very high order system.

Motivated by works in mixed $\mathcal{H}_2/\mathcal{H}_\infty$ control, (Bernstein and Haddad, 1989; Khargonekar and Rotea, 1991, and Scherer *et al.*, 1997), we developed a design procedure leading to a controller/detector of order $n_p + n_c + n_d$. Our procedure uses a modified version of method presented in Bernstein and Haddad, 1989 which does not apply directly to the problem at hand due to singularity conditions, see Remark 6.1.

The state-space representation of G in (3.1) can be written as

$$G : \begin{cases} \dot{x}_p = A_p\, x_p + B_{p_1}\, w + B_{p_2}\, u \\ y_p = C_p\, x_p + D_{p_1}\, w + D_{p_2}\, u \end{cases} \tag{6.1}$$

where $x_p \in \mathbb{R}^{n_p}$ is the state. The fault f, the disturbance d, and the command input y_r can be expressed in terms of w as

$$f = \Psi_f\, w, \quad d = \Psi_d\, w, \quad y_r = \Psi_r\, w$$

where $\Psi_f \in \mathbb{R}^{q\times r}$, $\Psi_d \in \mathbb{R}^{l\times r}$ and $\Psi_r \in \mathbb{R}^{p_2\times r}$ are constant matrices.

To describe the control objective z_c in (3.2) in terms of time-domain quantities, we assume the following minimal state-space realizations for W_{c_1} and W_{c_2}:

$$W_{c_1} \;:=\; \left[\begin{array}{c|c} A_{wc1} & B_{wc1} \\ \hline C_{wc1} & D_{wc1} \end{array}\right] \;;\quad W_{c2} \;:=\; \left[\begin{array}{c|c} A_{wc2} & B_{wc2} \\ \hline C_{wc2} & D_{wc2} \end{array}\right] .$$

where $A_{wc1} \in \mathbb{R}^{n_{c_1}\times n_{c_1}}$ and $A_{wc2} \in \mathbb{R}^{n_{c_2}\times n_{c_2}}$. The augmented plant P_c is obtained from the weighting functions W_{c_1} and W_{c_2} and nominal model G as follows

$$P_c : \left\{ \begin{array}{l} \dot{x}_c = A_c\, x_c + B_{c_1}\, w + B_{c_2}\, u \\ z_c = C_{c_1}\, x_c + D_{c_{11}}\, w + D_{c_{12}}\, u \\ y = C_{c_2}\, x_c + D_{c_{21}}\, w + D_{c_{22}}\, u \end{array} \right. \tag{6.2}$$

where $x_c \in \mathbb{R}^{n_c+n_p}$ $(n_c = n_{c_1} + n_{c_2})$, $y = \begin{pmatrix} y_p^T & y_r^T \end{pmatrix}^T \in \mathbb{R}^p$ $(p = p_1 + p_2)$ and

$$A_c = \begin{pmatrix} A_p & 0 & 0 \\ B_{wc1}\, C_p & A_{wc1} & 0 \\ 0 & 0 & A_{wc2} \end{pmatrix},\; B_{c_1} = \begin{pmatrix} B_{p_1} \\ B_{wc1}(D_{p_1} - \Psi_r) \\ 0 \end{pmatrix},$$

$$B_{c_2} = \begin{pmatrix} B_{p_2} \\ B_{wc1} D_{p_2} \\ B_{wc2} \end{pmatrix},\; C_{c_1} = \begin{pmatrix} D_{wc1}\, C_p & C_{wc1} & C_{wc2} \end{pmatrix},\; D_{c_{11}} = -D_{wc1}\, \Psi_r,$$

$$D_{c_{12}} = D_{wc1}\, D_{p_2} + D_{wc2},\; C_{c_2} = \begin{pmatrix} C_p & 0 & 0 \\ 0 & 0 & 0 \end{pmatrix},$$
$$D_{c_{21}} = \begin{pmatrix} D_{p_1} \\ \Psi_r \end{pmatrix},\; D_{c_{22}} = \begin{pmatrix} D_{p_2} \\ 0 \end{pmatrix}.$$

To describe the detection objective z_d in (3.3) in terms of time-domain quantities, we assume the following minimal state-space realizations for W_{d_1} and W_{d_2}:

$$W_{d_1} \;:=\; \left[\begin{array}{c|c} A_{wd1} & B_{wd1} \\ \hline C_{wd1} & D_{wd1} \end{array}\right] \;;\quad W_{d_2} \;:=\; \left[\begin{array}{c|c} A_{wd2} & B_{wd2} \\ \hline C_{wd2} & D_{wd2} \end{array}\right] .$$

where $A_{wd1} \in \mathbb{R}^{n_{d_1}\times n_{d_1}}$ and $A_{wd2} \in \mathbb{R}^{n_{d_2}\times n_{d_2}}$. And we let

$$P_d : \left\{ \begin{array}{l} \dot{x}_d = A_d\, x_d + B_{d_1}\, w + B_{d_2}\, \hat{f} \\ z_d = C_d\, x_d + D_{d_{11}}\, w + D_{d_{12}}\, \hat{f} \end{array} \right. \tag{6.3}$$

where $x_d \in \mathbb{R}^{n_d}$ $(n_d = n_{d_1} + n_{d_2})$ and

$$A_d = \begin{pmatrix} A_{wd1} & B_{wd1}\, C_{wd2} \\ 0 & A_{wd2} \end{pmatrix},\ B_{d_1} = \begin{pmatrix} B_{wd1}\, D_{wd2}\, \Psi_f \\ B_{wd2}\, \Psi_f \end{pmatrix},\ B_{d_2} = \begin{pmatrix} -B_{wd1}\, C_{wd2} \\ 0 \end{pmatrix}$$

$$C_d = \begin{pmatrix} C_{wd1} & D_{wd1}\, C_{wd2} \end{pmatrix},\ D_{d_{11}} = D_{wd1}\, D_{wd2}\, \Psi_f,\ D_{d_{12}} = -D_{wd1}$$

We also make the following assumptions:

A1. (A_p, B_{p_2}) is stabilizable and (C_p, A_p) is detectable.

A2. A_d, $\bar{A}_{c_1}$, and $\bar{A}_{c_2}$ are Hurwitz.

A3. $D_{c_{11}} = 0$, $D_{c_{22}} = 0$, and $D_{d_{11}} = 0$.

A4. $D_{c_{12}}^T D_{c_{12}}$, $D_{d_{12}}^T D_{d_{12}}$ and $D_{c_{21}} D_{c_{21}}^T$ are nonsingular.

In view of (6.1), (6.2), and (6.3), the state-space representation of the generalized plant P in Figure 3.3 becomes

$$P : \begin{cases} \dot{x} = Ax + B_1\, w + B_2\, u + B_3\, \hat{f} \\ z_c = E_1\, x + E_2\, u \\ z_d = F_1\, x + F_2\, \hat{f} \\ y = C\, x + D\, w \end{cases}$$

where $x = \begin{pmatrix} {x_c}^T & {x_d}^T \end{pmatrix}^T \in \mathbb{R}^n$ $(n = n_c + n_d + n_p)$ and

$$\begin{aligned} &A = \begin{pmatrix} A_c & 0 \\ 0 & A_d \end{pmatrix},\ B_1 = \begin{pmatrix} B_{c_1} \\ B_{d_1} \end{pmatrix},\ B_2 = \begin{pmatrix} B_{c_2} \\ 0 \end{pmatrix},\ B_3 = \begin{pmatrix} 0 \\ B_{d_2} \end{pmatrix}, \\ &E_1 = \begin{pmatrix} C_{c_1} & 0 \end{pmatrix},\ E_2 = D_{c_{12}},\ F_1 = \begin{pmatrix} 0 & C_{d_1} \end{pmatrix}, \\ &F_2 = D_{d_{12}},\ C = \begin{pmatrix} C_{c_2} & 0 \end{pmatrix},\ D = D_{c_{21}}. \end{aligned}$$

Note that assumption **A3** implies that there are no feedthrough terms from the exogenous input w to z_c and z_d. Similarly, there is no direct feedthrough from the control input u to the measured output y. Although it is possible to include these terms, we have chosen not to do so in order to keep the presentation simple. Under assumptions **A1**, **A2** and **A4**, it is straightforward to verify the following statements:

B1. $(A, \begin{pmatrix} B_2 & B_3 \end{pmatrix})$ is stabilizable and (C, A) is detectable.

B2. ${E_2}^T E_2$, ${F_2}^T F_2$ and DD^T are nonsingular.

We characterize the controller/detector K in Figure 3.3 in terms of a controllable and observable LTI system:

$$K : \begin{cases} \dot{v} = M\, v + N\, y \\ u = L_1\, v \\ \hat{f} = L_2\, v \end{cases}$$

where $v \in \mathbb{R}^n$ $(n = n_p + n_c + n_d)$. Recall that internal stability conditions require that the transfer function K be in $\mathcal{S}_1$; **B1** guarantees that the set $\mathcal{S}_1$ is nonempty. Using the above, the closed-loop transfer function T from w to z_c and z_d in the time-domain is given by

$$T : \begin{cases} \dot{X} = \mathcal{A}\, X + \mathcal{B}\, w \\ z_c = \mathcal{C}_1\, X \\ z_d = \mathcal{C}_2\, X \end{cases} \tag{6.4}$$

where $X = \begin{pmatrix} {x_c}^T & {x_d}^T & v^T \end{pmatrix}^T \in \mathbb{R}^{2n}$ and

$$\mathcal{A} = \begin{pmatrix} A & B_2\, L_1 + B_3\, L_2 \\ N\, C & M \end{pmatrix},\ \mathcal{B} = \begin{pmatrix} B_1 \\ N\, D \end{pmatrix},$$
$$\mathcal{C}_1 = \begin{pmatrix} E_1 & E_2\, L_1 \end{pmatrix},\ \mathcal{C}_2 = \begin{pmatrix} F_1 & F_2\, L_2 \end{pmatrix}.$$

The transfer functions T_1 and T_2 from w to z_c and z_d in $z_c = T_1\, w$ and $z_d = T_2\, w$ have the following state-space representaions

$$T_1 := \left[\begin{array}{c|c} \mathcal{A} & \mathcal{B} \\ \hline \mathcal{C}_1 & 0 \end{array}\right], \quad T_2 := \left[\begin{array}{c|c} \mathcal{A} & \mathcal{B} \\ \hline \mathcal{C}_2 & 0 \end{array}\right]$$

Lemma 6.1 *Consider the closed-loop system (6.4). If $\mathcal{A}$ is Hurwitz, we have*

$$J(M, N, L_1, L_2, \tilde{\mathcal{Q}}) = Tr\,[\,\tilde{\mathcal{Q}}\, R\,]$$

where $R = \mathcal{C}_2^T\, \mathcal{C}_2$ and $\tilde{\mathcal{Q}}$ is the controllability Gramian of the pair $(\mathcal{A}, \mathcal{B})$ satisfying

$$\mathcal{A}\, \tilde{\mathcal{Q}} + \tilde{\mathcal{Q}}\, \mathcal{A}^T + V = 0$$

where $V = \mathcal{B}\, \mathcal{B}^T$.

Using Lemma 6.1, Problem 6.1 can then be expressed as follows.

Problem 6.2

$$\min_{M, N, L_1, L_2, \tilde{\mathcal{Q}}} Tr\,[\,\tilde{\mathcal{Q}}\, R\,]$$

subject to $\mathcal{A} being$ Hurwitz, and

$$\begin{cases} \mathcal{A}\, \tilde{\mathcal{Q}} + \tilde{\mathcal{Q}}\, \mathcal{A}^T + V = 0, \qquad \tilde{\mathcal{Q}} \geq 0 \\ \|\mathcal{C}_1\, (sI - \mathcal{A})^{-1} \mathcal{B})\|_\infty \leq \gamma \end{cases}$$

where $\gamma > 0$.

As in Bernstein and Haddad, 1989, we replace the algebraic Lyapunov equation in Problem 6.2 by an algebraic Riccati equation which overbounds $\tilde{\mathcal{Q}}$. Justification for this technique is provided by the following result.

Lemma 6.2 *Let (M, N, L_1, L_2) be given and assume there exists a symmetric matrix $\mathcal{Q} \in \mathbb{R}^{2\,n \times 2\,n}$ such that*

$$\mathcal{A}\,\mathcal{Q} + \mathcal{Q}\,\mathcal{A}^T + \gamma^{-2}\,\mathcal{Q}\,S\,\mathcal{Q} + V = 0, \quad \mathcal{Q} \geq 0 \tag{6.5}$$

where $S = \mathcal{C}_1^T\,\mathcal{C}_1$, and $\gamma > 0$, then $(\mathcal{A}, \mathcal{B})$ is stabilizable if and only if $\mathcal{A}$ is Hurwitz. In this case, $\|T_1(K_1)\|_\infty \leq \gamma$ and

$$J(M, N, L_1, L_2, \tilde{\mathcal{Q}}) \leq \mathcal{J}(M, N, L_1, L_2, \mathcal{Q})$$

where

$$\mathcal{J}(M, N, L_1, L_2, \mathcal{Q}) = Tr\,[\,\mathcal{Q}\,R\,]. \tag{6.6}$$

This lemma leads to the following auxiliary minimization problem.

Problem 6.3

$$\min_{M,N,L_1,L_2,\mathcal{Q}} Tr\,[\,\mathcal{Q}\,R\,] \tag{6.7}$$

subject to $\mathcal{A}$ being Hurwitz, and

$$\mathcal{A}\,\mathcal{Q} + \mathcal{Q}\,\mathcal{A}^T + \gamma^{-2}\,\mathcal{Q}\,S\,\mathcal{Q} + V = 0, \quad \mathcal{Q} \geq 0 \tag{6.8}$$

where $S = \mathcal{C}_1^T\,\mathcal{C}_1$, and $\gamma > 0$.

Before continuing, we need to define the following notations

$$\begin{array}{rl}
R_1,\, R_2,\, R_{12},\, R_{d_1}: & {F_1}^T\,F_1,\, {F_2}^T\,F_2, F_1^T\,F_2,\, {C_{d_1}}^T\,C_{d_1} \\
\bar{R}_1, \bar{R}_{d_1}: & R_1 - R_{12}\,R_2^{-1}\,R_{12}^T,\, R_{d_1} - C_{d_1}^T\,D_{d_{12}}\,R_2^T\,D_{d_{12}}^T\,C_{d_1} \\
S_1,\, S_2,\, S_{12},\, S_{c_1},\, \bar{S}_1: & {E_1}^T\,E_1,\, {E_2}^T\,E_2,\, E_1^T\,E_2, {C_{c_1}}^T\,C_{c_1},\, S_1 - S_{12}\,S_2^{-1}\,S_{12}^T \\
S_3,\, \bar{S}_{c_1}: & S_{12}\,S_2^{-1}\,S_{12}^T,\, S_{c_1} - C_{c_1}^T\,D_{c_{12}}\,S_2^{-1}\,D_{c_{12}}^T\,C_{c_1} \\
\Sigma_1,\, \Sigma_2,\, \Sigma_{d_2}: & B_2\,{S_2}^{-1}\,{B_2}^T,\, B_3\,{R_2}^{-1}\,{B_3}^T, B_{d_2}\,{R_2}^{-1}\,{B_{d_2}}^T \\
\Sigma_3,\, \Sigma_{31}: & B_2\,S_2^{-1}\,S_{12}^T + B_3\,R_2^{-1}\,R_{12}^T,\, B_{c_2}\,S_2^{-1}\,D_{c_{12}}^T\,C_{c_1} \\
\Sigma_{32},\, \bar{\Sigma},\, \bar{\Sigma}_1: & B_{d_2}\,R_2^{-1}\,D_{d_{12}}^T\,C_{d_1},\, C^T\,{V_2}^{-1}\,C,\, {C_{c_2}}^T\,{V_2}^{-1}\,C_{c_2} \\
\Sigma_{c_1},\, V_1,\, V_2,\, V_3: & B_{c_2}\,{S_2}^{-1}\,{B_{c_2}}^T,\, B_1\,{B_1}^T,\, D\,D^T,\, B_1\,D^T \\
Q,\, P: & \begin{pmatrix} Q_1 & Q_{12} \\ Q_{12}^T & Q_2 \end{pmatrix}, \quad \begin{pmatrix} P_1 & P_{12} \\ P_{12}^T & P_2 \end{pmatrix}, \\
\hat{Q},\, \hat{V}: & \begin{pmatrix} \hat{Q}_1 & \hat{Q}_{12}, \\ \hat{Q}_{12}^T & \hat{Q}_2 \end{pmatrix} \quad \begin{pmatrix} \hat{V}_1 & \hat{V}_{12} \\ \hat{V}_{12}^T & \hat{V}_2 \end{pmatrix}.
\end{array}$$

The following theorem presents the necessary conditions for the optimality of the auxiliary minimization problem.

Theorem 6.1 *If $(M, N, L_1, L_2, \mathcal{Q})$ solves Problem 6.3, then there exist symmetric matrices $Q \geq 0$, $P \geq 0$, $\hat{Q} > 0$ such that*

$$\begin{aligned} M &= A - \gamma^2\,\Sigma_1\,\hat{Q}^{-1} - \Sigma_2\,P + \gamma^{-2}\,Q\,S_1 - Q\,\bar{\Sigma} - V_3\,{V_2}^{-1}\,C - \\ &\quad B_2\,S_2^{-1}\,S_{12}^T\,(Q+\hat{Q})\,\hat{Q}^{-1} - B_3\,R_2^{-1}\,R_{12}^T - Q\,S_{12}\,S_2^{-1}\,B_2^T\,\hat{Q}^{-1} - \\ &\quad \gamma^{-2}\,Q\,S_{12}\,S_2^{-1}\,S_{12}^T\,(Q+\hat{Q})\,\hat{Q}^{-1} \\ N &= (Q\,C^T + V_3)\,{V_2}^{-1} \\ L_1 &= -\gamma^2\,{S_2}^{-1}\,({B_2}^T + \gamma^{-2}\,S_{12}^T\,(Q+\hat{Q})^T)\hat{Q}^{-1} \\ L_2 &= -{R_2}^{-1}\,(R_{12}^T + {B_3}^T\,P) \end{aligned} \tag{6.9}$$

$$\mathcal{Q} = \begin{pmatrix} Q+\hat{Q} & \hat{Q} \\ \hat{Q} & \hat{Q} \end{pmatrix}$$

and such that Q, P, $\hat{Q}$ satisfy

$$(A - V_3\,{V_2}^{-1}\,C)\,Q + Q\,(A - V_3\,{V_2}^{-1}\,C)^T + Q(\gamma^{-2}\,S_1 - \bar{\Sigma})\,Q + V_1 - V_3\,{V_2}^{-1}\,{V_3}^T = 0, \tag{6.10}$$

$$(A + \gamma^{-2}\,(Q+\hat{Q})\,\bar{S}_1 - \Sigma_3)^T\,P + P\,(A + \gamma^{-2}\,(Q+\hat{Q})\,\bar{S}_1 - \Sigma_3) - P\,\Sigma_2\,P + \bar{R}_1 = 0, \tag{6.11}$$

$$\begin{aligned} &(A - \Sigma_2\,P + \gamma^{-2}\,Q\,\bar{S}_1 - \Sigma_3)\,\hat{Q} + \hat{Q}\,(A - \Sigma_2\,P + \gamma^{-2}\,Q\,\bar{S}_1 - \Sigma_3)^T \\ &\qquad + \gamma^{-2}\,\hat{Q}\,\bar{S}_1\,\hat{Q} + Q\,(\bar{\Sigma} - \gamma^{-2}\,S_3)Q - \gamma^2\,\Sigma_1 + \hat{V} = 0. \end{aligned} \tag{6.12}$$

where

$$\hat{V} = (V_3\,V_2^{-1}\,C - B_2\,S_2^{-1}\,S_{12}^T)\,Q + Q\,(V_3\,V_2^{-1}\,C - B_2\,S_2^{-1}\,S_{12}^T)^T + V_3\,V_2^{-1}\,V_3^T.$$

and the $\mathcal{H}_2$-detection performance $J(.)$ satisfies the bound

$$J(M, N, L_1, L_2, \tilde{\mathcal{Q}}) \leq \mathcal{J}\,(M, N, L_1, L_2, \mathcal{Q}) \tag{6.13}$$

where

$$\mathcal{J}\,(M, N, L_1, L_2, \mathcal{Q}) \;=\; Tr\,[\,(Q + \hat{Q})R_1 + \hat{Q}\,L_2^T R_{12}^T + \hat{Q}R_{12}L_2 + \hat{Q}L_2^T R_2 L_2\,] \tag{6.14}$$

Conversely, if there exist symmetric matrices $Q \geq 0$, $P \geq 0$, $\hat{Q} > 0$ satisfying (6.10), (6.11), and (6.12), $(M, N, L_1, L_2, \mathcal{Q})$ given by (6.9) satisfies $\mathcal{Q} \geq 0$ and (6.8) with auxiliary cost $\mathcal{J}(.)$ in (6.6) given by (6.14).

Proof:

Form the Lagrangian

$$\mathcal{L}(M,N,L_1,L_2,\mathcal{Q},\mathcal{P}) := \mathrm{Tr}\,\left\{\mathcal{Q}\,R + (\mathcal{A}\,\mathcal{Q} + \mathcal{Q}\,\mathcal{A}^T + \gamma^{-2}\,\mathcal{Q}\,S\,\mathcal{Q} + V)\,\mathcal{P}\right\}$$

where the Lagrangian multiplier $\mathcal{P} \in \mathbb{R}^{2n\times 2n}$ is a nonnegative definite matrix. Now partition $2n\times 2n$ matrices $\mathcal{Q}$ and $\mathcal{P}$ into $n \times n$ sub-blocks as

$$\mathcal{Q} = \begin{pmatrix} \mathcal{Q}_1 & \mathcal{Q}_{12} \\ \mathcal{Q}_{12}^T & \mathcal{Q}_2 \end{pmatrix}, \quad \mathcal{P} = \begin{pmatrix} \mathcal{P}_1 & \mathcal{P}_{12} \\ \mathcal{P}_{12}^T & \mathcal{P}_2. \end{pmatrix}$$

After some algebra, the Lagrangian $\mathcal{L}$ can be written as

$$\begin{aligned}
\mathcal{L} = {} & \mathrm{Tr}\,(R_1\,\mathcal{Q}_1) + \mathrm{Tr}\,(R_{12}\,L_2\,\mathcal{Q}_{12}) + \mathrm{Tr}\,(L_2^T\,R_{12}^T\,\mathcal{Q}_{12}) + \mathrm{Tr}\,(L_2^T\,R_2\,L_2\,\mathcal{Q}_2) \\
& + \mathrm{Tr}\,(\mathcal{P}_1\,A\,\mathcal{Q}_1) + \mathrm{Tr}\,(\mathcal{P}_1\,\mathcal{Q}_{12}\,L_2^T\,B_3^T) + \gamma^{-2}\,\mathrm{Tr}\,(\mathcal{P}_1\,\mathcal{Q}_1\,S_1\,\mathcal{Q}_1) \\
& + \gamma^{-2}\,\mathrm{Tr}\,(\mathcal{P}_1\,\mathcal{Q}_{12}\,L_1^T\,S_{12}^T\,\mathcal{Q}_1) + \gamma^{-2}\,\mathrm{Tr}\,(\mathcal{P}_1\,\mathcal{Q}_1\,S_{12}\,L_1\,\mathcal{Q}_{12}^T) \\
& + \gamma^{-2}\,\mathrm{Tr}\,(\mathcal{P}_1\,\mathcal{Q}_{12}\,L_1^T\,S_2\,L_1\,\mathcal{Q}_{12}^T) + \mathrm{Tr}\,(\mathcal{P}_1\,V_1) + \mathrm{Tr}\,(\mathcal{P}_{12}\,N\,C\,\mathcal{Q}_1) \\
& + \mathrm{Tr}\,(\mathcal{P}_{12}\,\mathcal{Q}_{12}^T\,A^T) + \mathrm{Tr}\,(\mathcal{P}_{12}\,\mathcal{Q}_2\,L_1^T\,B_2^T) + \mathrm{Tr}\,(\mathcal{P}_{12}\,\mathcal{Q}_2\,L_2^T\,B_3^T) \\
& + \gamma^{-2}\,\mathrm{Tr}\,(\mathcal{P}_{12}\,\mathcal{Q}_{12}^T\,S_1\,\mathcal{Q}_1) + \gamma^{-2}\,\mathrm{Tr}\,(\mathcal{P}_{12}\,\mathcal{Q}_2\,L_1^T\,S_{12}^T\,\mathcal{Q}_1) \\
& + \gamma^{-2}\,\mathrm{Tr}\,(\mathcal{P}_{12}\,\mathcal{Q}_2\,L_1^T\,S_2\,L_1\,\mathcal{Q}_{12}^T) + \mathrm{Tr}\,(\mathcal{P}_{12}^T\,B_3\,L_2\,\mathcal{Q}_2) + \mathrm{Tr}\,(\mathcal{P}_{12}^T\,\mathcal{Q}_1\,C^T\,N^T) \\
& + \mathrm{Tr}\,(\mathcal{P}_{12}^T\,\mathcal{Q}_{12}\,M^T) + \gamma^{-2}\,\mathrm{Tr}\,(\mathcal{P}_{12}^T\,\mathcal{Q}_1\,S_1\,\mathcal{Q}_{12}) + \gamma^{-2}\,\mathrm{Tr}\,(\mathcal{P}_{12}^T\,\mathcal{Q}_{12}\,L_1^T\,S_{12}^T\,\mathcal{Q}_{12}) \\
& + \gamma^{-2}\,\mathrm{Tr}\,(\mathcal{P}_{12}^T\,\mathcal{Q}_1\,S_{12}\,L_1\,\mathcal{Q}_2) + \gamma^{-2}\,\mathrm{Tr}\,(\mathcal{P}_{12}^T\,\mathcal{Q}_{12}\,L_1^T\,S_2\,L_1\,\mathcal{Q}_2) + \mathrm{Tr}\,(\mathcal{P}_{12}^T\,V_{12}\,N^T) \\
& + \mathrm{Tr}\,(\mathcal{P}_2\,N\,C\,\mathcal{Q}_{12}) + Tr(\mathcal{P}_2\,M\,\mathcal{Q}_2) + \mathrm{Tr}\,(\mathcal{P}_2\,\mathcal{Q}_{12}^T\,C^T\,N^T) \\
& + \mathrm{Tr}\,(\mathcal{P}_2\,\mathcal{Q}_2\,\mathcal{M}^T) + \gamma^{-2}\,\mathrm{Tr}\,(\mathcal{P}_2\,\mathcal{Q}_{12}^T\,S_1\,\mathcal{Q}_{12}) + \mathrm{Tr}\,(\mathcal{P}_{12}\,M\,\mathcal{Q}_{12}^T) \\
& + \gamma^{-2}\,\mathrm{Tr}\,(\mathcal{P}_2\,\mathcal{Q}_2\,L_1^T\,S_{12}^T\,\mathcal{Q}_{12}) + \gamma^{-2}\,\mathrm{Tr}\,(\mathcal{P}_2\,\mathcal{Q}_{12}^T\,S_{12}\,L_1\,\mathcal{Q}_2) + \mathrm{Tr}\,(\mathcal{P}_2\,N\,V_2\,N^T) \\
& + \gamma^{-2}\,\mathrm{Tr}\,(\mathcal{P}_2\,\mathcal{Q}_2\,L_1^T\,S_2\,L_1\,Q_2) + \gamma^{-2}\,\mathrm{Tr}\,(\mathcal{P}_{12}\,\mathcal{Q}_{12}^T\,S_{12}\,L_1\,\mathcal{Q}_{12}^T).
\end{aligned}$$

The stationarity conditions are given by

$$\frac{\partial \mathcal{L}}{\partial M} = \mathcal{Q}_{12}^T\,\mathcal{P}_{12} + \mathcal{Q}_2\,\mathcal{P}_2 = 0 \tag{6.15}$$

$$\frac{\partial \mathcal{L}}{\partial N} = V_3^T\,\mathcal{P}_{12} + C\,\mathcal{Q}_1\,\mathcal{P}_{12} + C\,\mathcal{Q}_{12}\,\mathcal{P}_2 + V_2\,N^T\,\mathcal{P}_2 = 0 \tag{6.16}$$

$$\frac{\partial \mathcal{L}}{\partial L_1} = \gamma^{-2}\,S_2\,L_1\,\mathcal{Q}_{12}^T\,(\mathcal{Q}_{12}^T\,\mathcal{P}_1 + \mathcal{Q}_2\,\mathcal{P}_{12}^T)^T + (B_2 + \gamma^{-2}\,\mathcal{Q}_1\,S_{12})^T\,(\mathcal{P}_1\,\mathcal{Q}_{12} + \mathcal{P}_{12}\,\mathcal{Q}_2) = 0 \tag{6.17}$$

$$\frac{\partial \mathcal{L}}{\partial L_2} = \mathcal{Q}_2\,{L_2}^T\,R_2 + Q_{12}^T\,R_{12} + (\mathcal{Q}_{12}^T\,\mathcal{P}_1 + \mathcal{Q}_2\,\mathcal{P}_{12}^T)\,B_3 = 0 \tag{6.18}$$

$$\frac{\partial \mathcal{L}}{\partial \mathcal{P}_1} = A\,\mathcal{Q}_1 + B_2\,L_1\,\mathcal{Q}_{12}^T + B_3\,L_2\,\mathcal{Q}_{12}^T + \mathcal{Q}_1\,A^T + \mathcal{Q}_{12}\,L_1^T\,B_2^T + \mathcal{Q}_{12}\,L_2^T\,B_3^T + \gamma^{-2}\,\mathcal{Q}_1\,S_1\,\mathcal{Q}_1 + \gamma^{-2}\,\mathcal{Q}_{12}\,L_1^T\,S_{12}^T\,\mathcal{Q}_1 + \gamma^{-2}\,\mathcal{Q}_1\,S_{12}\,L_1\,Q_{12}^T + \gamma^{-2}\,Q_{12}\,L_1^T\,S_2\,L_1\,Q_{12}^T + V_1 = 0 \tag{6.19}$$

$$\frac{\partial \mathcal{L}}{\partial \mathcal{P}_{12}} = N\,C\,\mathcal{Q}_1 + M\,\mathcal{Q}_{12}^T + \mathcal{Q}_{12}^T\,A^T + \mathcal{Q}_2\,L_1^T\,B_2^T + \mathcal{Q}_2\,L_2^T\,B_3^T + \gamma^{-2}\,\mathcal{Q}_{12}^T\,S_1\,\mathcal{Q}_1 + \gamma^{-2}\,\mathcal{Q}_2\,L_1^T\,S_{12}^T\,\mathcal{Q}_1 + \gamma^{-2}\,\mathcal{Q}_{12}^T\,S_{12}\,L_1\,Q_{12}^T + \gamma^{-2}\,Q_2\,L_1^T\,S_2\,L_1\,Q_{12}^T + N\,V_{12}^T = 0 \tag{6.20}$$

$$\frac{\partial \mathcal{L}}{\partial \mathcal{P}_2} = N\,C\,\mathcal{Q}_{12} + M\,\mathcal{Q}_2 + \mathcal{Q}_{12}^T\,C^T\,N^T + Q_2\,M^T + \gamma^{-2}\,\mathcal{Q}_{12}^T\,S_1\,\mathcal{Q}_{12} + \gamma^{-2}\,\mathcal{Q}_2\,L_1^T\,S_{12}^T\,\mathcal{Q}_{12} + \gamma^{-2}\,\mathcal{Q}_{12}^T\,S_{12}\,L_1\,Q_2 + \gamma^{-2}\,\mathcal{Q}_2\,L_1^T\,S_2\,L_1\,Q_2 + N\,V_2\,N^T = 0 \tag{6.21}$$

$$\frac{\partial \mathcal{L}}{\partial \mathcal{Q}_1} = \mathcal{P}_1\,A + A^T\,\mathcal{P}_1 + \gamma^{-2}\,S_1\,\mathcal{Q}_1\,\mathcal{P}_1 + \gamma^{-2}\,\mathcal{P}_1\,\mathcal{Q}_{12}\,L_1^T\,S_{12}^T + \gamma^{-2}\,S_{12}\,L_1\,\mathcal{Q}_{12}^T\,\mathcal{P}_1 + \mathcal{P}_{12}\,N\,C + \gamma^{-2}\,\mathcal{P}_{12}\,\mathcal{Q}_{12}^T\,S_1 + \gamma^{-2}\,\mathcal{P}_{12}\,\mathcal{Q}_2\,L_1^T\,S_{12}^T + C^T\,N^T\,\mathcal{P}_{12}^T + \gamma^{-2}\,S_1\,\mathcal{Q}_{12}\,\mathcal{P}_{12}^T + \gamma^{-2}\,S_{12}\,L_1\,\mathcal{Q}_2\,\mathcal{P}_{12}^T + \gamma^{-2}\,\mathcal{P}_1\,\mathcal{Q}_1\,S_1 + R_1 = 0 \tag{6.22}$$

$$\frac{\partial \mathcal{L}}{\partial \mathcal{Q}_{12}} = L_2^T\,R_{12}^T + L_1^T\,B_2^T\,\mathcal{P}_1 + L_2^T\,B_3^T\,\mathcal{P}_1 + \gamma^{-2}\,L_1^T\,S_{12}^T\,\mathcal{Q}_1\,\mathcal{P}_1 + M^T\,\mathcal{P}_{12}^T + \mathcal{P}_{12}^T\,A + \gamma^{-2}\,\mathcal{P}_{12}^T\,\mathcal{Q}_1\,S_1 + \gamma^{-2}\,L_1^T\,S_{12}^T\,\mathcal{Q}_{12}\,\mathcal{P}_{12}^T + \gamma^{-2}\,\mathcal{P}_{12}^T\,\mathcal{Q}_{12}\,L_1^T\,S_{12}^T + \gamma^{-2}\,L_1^T\,S_2\,L_1\,\mathcal{Q}_2\,\mathcal{P}_{12}^T + \mathcal{P}_2\,N\,C + \gamma^{-2}\,\mathcal{P}_2\,\mathcal{Q}_2\,L_1^T\,S_{12}^T + \gamma^{-2}\,\mathcal{P}_2\,\mathcal{Q}_{12}^T\,S_1 + \gamma^{-2}\,L_1^T\,S_2\,L_1\,\mathcal{Q}_{12}^T\,\mathcal{P}_1 = 0 \tag{6.23}$$

$$\frac{\partial \mathcal{L}}{\partial \mathcal{Q}_2} = L_2^T\,R_2\,L_2 + L_1^T\,B_2^T\,\mathcal{P}_{12} + L_2^T\,B_3^T\,\mathcal{P}_{12} + \gamma^{-2}\,L_1^T\,S_{12}^T\,\mathcal{Q}_1\,\mathcal{P}_{12} + \gamma^{-2}\,L_1^T\,S_2\,L^1\,\mathcal{Q}_{12}^T\,\mathcal{P}_{12} + \mathcal{P}_{12}^T\,B_2\,L_1 + \mathcal{P}_{12}^T\,B_3\,L_2 + \gamma^{-2}\,\mathcal{P}_{12}^T\,\mathcal{Q}_1\,S_{12}\,L_1 + \gamma^{-2}\,\mathcal{P}_{12}^T\,\mathcal{Q}_{12}\,L_1^T\,S_2\,L_1 + \mathcal{P}_2\,M + M^T\,\mathcal{P}_2 + \gamma^{-2}\,L_1^T\,S_{12}^T\,\mathcal{Q}_{12}\,\mathcal{P}_2 + \gamma^{-2}\,\mathcal{P}_2\,\mathcal{Q}_{12}^T\,S_{12}\,L_1 + \gamma^{-2}\,\mathcal{P}_2\,\mathcal{Q}_2\,L_1^T\,S_2\,L_1 + \gamma^{-2}\,L_1^T\,S_2\,L_1\,\mathcal{Q}_2\,\mathcal{P}_2 = 0 \tag{6.24}$$

As in Bernstein and Haddad, 1989, it can be shown that $\mathcal{Q}_2$ and $\mathcal{P}_2$ are positive definite. Since R_2, V_2, $\mathcal{Q}_2$ and $\mathcal{P}_2$ are invertible, the equations (6.15) - (6.18) can be written as

$$-\,\mathcal{P}_2^{-1}\,\mathcal{P}_{12}^T\,\mathcal{Q}_{12}\,\mathcal{Q}_2^{-1} = I_n \tag{6.25}$$

$$N = -\mathcal{P}_2\,(V_3^T\,\mathcal{P}_{12} + C\,\mathcal{Q}_1\,\mathcal{P}_{12} + C\,\mathcal{Q}_{12}\,\mathcal{P}_2)^T\,V_2^{-1} \tag{6.26}$$

$$\gamma^{-2}\,L_1\,\mathcal{Q}_{12}^T\,(\mathcal{Q}_{12}^T\,\mathcal{P}_1 + \mathcal{Q}_2\,\mathcal{P}_{12}^T)^T = -S_2^{-1}\,(B_2 + \gamma^{-2}\mathcal{Q}_1\,S_{12})^T\,(\mathcal{P}_1\,\mathcal{Q}_{12} + \mathcal{P}_{12}\,\mathcal{Q}_2) \tag{6.27}$$

$$L_2 = -R_2^{-1}\,(Q_{12}^T\,R_{12} + (\mathcal{Q}_{12}^T\,\mathcal{P}_1 + \mathcal{Q}_2\,\mathcal{P}_{12}^T)\,B_3)^T\,\mathcal{Q}_2^{-1} \tag{6.28}$$

Now define the $n \times n$ matrices

$$Q := \mathcal{Q}_1 - \mathcal{Q}_{12}\,\mathcal{Q}_2^{-1}\,\mathcal{Q}_{12}^T, \quad P := \mathcal{P}_1 - \mathcal{P}_{12}\,\mathcal{P}_2^{-1}\,\mathcal{P}_{12}^T$$

$$\hat{Q} := \mathcal{Q}_{12}\,\mathcal{Q}_2^{-1}\,\mathcal{Q}_{12}^T, \quad \hat{P} := \mathcal{P}_{12}\,\mathcal{P}_2^{-1}\,\mathcal{P}_{12}^T.$$

It can be shown that Q, P, $\hat{Q}$, and $\hat{P}$ are nonnegative definite. Next the components of $\mathcal{Q}$ and $\mathcal{P}$ are expressed in terms of Q, P, $\hat{Q}$, and $\hat{P}$ as

$$\begin{aligned} &\mathcal{Q}_1 = Q + \hat{Q}, \quad \mathcal{P}_1 = P + \hat{P}, \quad \mathcal{Q}_{12} = \hat{Q}, \\ &\mathcal{P}_{12} = -\hat{P}, \quad \mathcal{Q}_2 = \hat{Q}, \quad \mathcal{P}_2 = \hat{P}. \end{aligned} \tag{6.29}$$

The expressions for N, L_1, L_2 given by (6.9) and $\mathcal{Q}$ follow from (6.26), (6.27), (6.28) and the definition of $\mathcal{Q}$. Next, computing either (6.20) minus (6.21) or (6.23) plus (6.24) yields the expression for M in (6.9). Substituting (6.29) into (6.19) through (6.24) and the expression for M into (6.21), (6.22), (6.23), and (6.24) it follows that (6.21) equals (6.20) and (6.24) equals (6.23). Thus, (6.21) and (6.24) are superfluous and can be omitted. Next, using (6.19) minus (6.20) and (6.20), we obtain (6.10) and (6.12). Similary, (6.22) minus (6.24) yields (6.11). The proof of the converse is straightforward and is omitted.

□

Remark 6.1 *For using Theorem 3.1 in Berstein and Haddad, 1989, we must rewrite the generalized plant P in (8.4) as follows*

$$\tilde{P} : \begin{cases} \dot{x} &= Ax + B_1\,w + \tilde{B}_2\,\tilde{u} \\ z_c &= E_1\,x + \tilde{E}_2\,\tilde{u} \\ z_d &= F_1\,x + \tilde{F}_2\,\tilde{u} \\ y &= C\,x + D\,w \end{cases}$$

where $x \in \mathbb{R}^n$, $\tilde{u} = \begin{pmatrix} u^T & \hat{f}^T \end{pmatrix}^T \in \mathbb{R}^{m+q}$ is the new control input and

$$\tilde{B}_2 = \begin{pmatrix} B_2 & B_3 \end{pmatrix}, \quad \tilde{E}_1 = \begin{pmatrix} E_1 & 0 \end{pmatrix}, \quad \tilde{F}_1 = \begin{pmatrix} 0 & F_1 \end{pmatrix}.$$

Clearly, $\tilde{E}_1$ and $\tilde{F}_1$ are not full column rank and thus Theorem 3.1 in Bernstein and Haddad, 1989 does not apply.

Thanks to the structure of the matrices in the problem formulation, we can transform these coupled Riccati equations into seperate Riccati Equations and Linear Matrix Equations (LME). This considerably simplifies the solution of these coupled Riccati equations see Khosrowjerdi *et al*., 2002. Without loss of generality, we assume that the weighting function W_{d_1} in the detection performance measure z_d (3.3) is proper and nonminimum phase and W_{d_2} is strictly proper. Under these assumptions the P equation (6.11) admits trivial solution $P = 0$. After some matrix algebra, we obtain the following Algebraic Riccati Equation (ARE) and LME's

$$(A - V_3\, V_2{}^{-1}\, C)\, Q + Q\, (A - V_3\, V_2{}^{-1}\, C)^T + Q(\gamma^{-2}\, S_1 - \bar{\Sigma})\, Q + V_1 - V_3\, V_2{}^{-1}\, V_3{}^T = 0 \tag{6.30}$$

$$(A_c + \gamma^{-2}\, Q_1\, \bar{S}_{c_1} - \Sigma_{31})\, \hat{Q}_1 + \hat{Q}_1\, (A_c + \gamma^{-2}\, Q_1\, \bar{S}_{c_1} - \Sigma_{31})^T + \gamma^{-2}\, \hat{Q}_1\, \bar{S}_{c_1}\, \hat{Q}_1 + Q_1\, \bar{\Sigma}_1\, Q_1 - \gamma^2\, \Sigma_{c_1} + \hat{V}_1 = 0 \tag{6.31}$$

$$\mathcal{N}_1\, \hat{Q}_{12} + \hat{Q}_{12}\, \mathcal{N}_2{}^T = \mathcal{N}_3 \tag{6.32}$$

$$\mathcal{N}_2\, \hat{Q}_2 + \hat{Q}_2\, \mathcal{N}_2{}^T = \mathcal{N}_4 \tag{6.33}$$

where

$$\begin{aligned}
\mathcal{N}_1 &= A_c + \gamma^{-2}\, (Q_1 + \hat{Q}_1)\, \bar{S}_{c_1} - \Sigma_{31}, \\
\mathcal{N}_2 &= A_d - \Sigma_{32}, \\
\mathcal{N}_3 &= -(\gamma^{-2}\, \hat{Q}_1\, \bar{S}_{c_1}\, Q_{12} + Q_1\, \bar{\Sigma}_1\, Q_{12} + \hat{V}_{12}), \\
\mathcal{N}_4 &= -\gamma^{-2}\, Q_{12}{}^T\, \bar{S}_{c_1}\, \hat{Q}_{12} - \gamma^{-2}\, \hat{Q}_{12}^T\, \bar{S}_{c_1}\, Q_{12} - \gamma^{-2}\, \hat{Q}_{12}^T\, \bar{S}_{c_1}\, \hat{Q}_{12} - Q_{12}{}^T\, \Sigma_1{}^T\, Q_{12} - \hat{V}_2
\end{aligned}$$

Note that, comparing to the result proposed in Bernstein and Haddad, 1989, for solving the general mixed $\mathcal{H}_2/\mathcal{H}_\infty$ problem, here the Riccati equations are not coupled so that for each γ, all the matrices can be obtained using standard algorithms for solving ARE's and LME's. To solve the problem, the following algorithm can be implemented in **Scilab** or **Matlab**.

Algorithm: *Mixed $\mathcal{H}_2/\mathcal{H}_\infty$ approach*

- Step 1: Initialize $\gamma > 0$.
- Step 2: Solve ARE's (6.30) and (6.31) for Q and $\hat{Q}_1$.
- Step 3: Solve LME's (6.32) and (6.33) for $\hat{Q}_2$ and $\hat{Q}_{12}$.
- Step 4: If $Q \geq 0$ and $\hat{Q} > 0$ ($\mathcal{Q} \geq 0$) then decrease γ; otherwise increase γ and go to Step 2. Go to Step 5 if required precision is attained.
- Step 5: Compute the detector/controller K using (6.9)

Remark 6.2 *Noting that the matrix M given in (6.9) can be rewritten as follows*

$$M = (A + \gamma^{-2}\, Q\, S_1) + (B_2 + \gamma^{-2}\, Q\, S_{12})\, L_1 + B_3\, L_2 - N\, C$$

the controller/detector can be expressed as follows

$$K : \begin{cases} \dot{v} = (A + \gamma^{-2}\, Q\, S_1)\, v + (B_2 + \gamma^{-2}\, Q\, S_{12})\, u + B_3\, \hat{f} + N\,(y - C\, v) \\ u = L_1\, v \\ \hat{f} = L_2\, v \end{cases}$$

Clearly the controller/detector K has an observer-based structure. Using this observation, the controller/detector K has an interesting separation structure consisting of an $\mathcal{H}_\infty$ filtering problem for computing the gain N and a mixed $\mathcal{H}_2/\mathcal{H}_\infty$ state feedback problem for computing L_1 and L_2. Specifically, it can be shown that the controller/detector $K \in \mathcal{S}_1$ in the form (6.4) which solves the auxiliary minimization problem in Problem 6.3 can be interpreted as (6.34), where N, L_1 and L_2 can be obtained in the following two steps:

- **An $\mathcal{H}_\infty$ Filtering Problem:** *Consider the following linear system as follows*

$$\begin{cases} \dot{x} &= A\, x + B_1\, w \\ y &= C\, x + D\, w \end{cases}$$

  Given $\gamma > 0$. The realization of an $\mathcal{H}_\infty$ filter to obtain an estimate $\hat{z}_c$ of $z_c = E_1\, x$ such that

$$\sup_{w \in \mathcal{L}_2[0,\infty)} \frac{\|z_c - \hat{z}_c\|_2}{\|w\|_2} \leq \gamma^2$$

  is given by

$$\begin{cases} \dot{\hat{x}} &= A\, \hat{x} + N\,(y - C\, \hat{x}) \\ \hat{z}_c &= E_1\, \hat{x} \end{cases}$$

  where

$$N = (Q\, C^T + V_3)\, {V_2}^{-1}$$

  and $Q \geq 0$ is the stabilizing solution to the Q equation (6.10) in Theorem 6.1.

- **An $\mathcal{H}_2/\mathcal{H}_\infty$ State Feedback Problem:** *Consider the following auxiliary system*

$$\begin{cases} \dot{x} &= (A + \gamma^{-2}\, Q\, S_1)x + N\,(DD^T)^{-1}\, \bar{w} + (B_2 + \gamma^{-2}\, Q\, S_{12})\, u + B_3\, \hat{f} \\ z_c &= E_1\, x + E_2\, u \\ z_d &= F_1\, x + F_2\, \hat{f} \\ y &= x \end{cases}$$

  where $\bar{w}$ is an exegenous input and L_1 and L_2 are the solution to a mixed $\mathcal{H}_2/\mathcal{H}_\infty$ state feedback design problem for the auxiliary system and are given by

$$L : \begin{cases} L_1 &= -\gamma^2\, {S_2}^{-1}\, ({B_2}^T + \gamma^{-2}\, S_{12}^T\, (Q + \hat{Q})^T)\, \hat{Q}^{-1} \\ L_2 &= -{R_2}^{-1}\, (R_{12}^T + {B_3}^T\, P) \end{cases}$$

where $\hat{Q} > 0$ and $P \geq 0$ are the solution to the $\hat{Q}$ and P equations, (6.12) and (6.11) in Theorem 6.1.

This result is a generalization of the result given in Khargonekar, 1991.

7 A case study: the Ball & Beam system

The ball and beam system, as shown in Figure 7.1, can be modeled by the following nonlinear equations

$$\ddot{\theta} = \frac{-2\,m\,r\,\dot{r}\,\dot{\theta} - m\,r\,g\,\cos\theta + \tau - \tau_d}{m\,r^2 + J_B}$$

$$\ddot{r} = \frac{-m\,g\,a^2\,\sin\theta + m\,a^2\,r\,\dot{\theta}^2}{m\,a^2 + J_b}$$

where r is the position of the ball on the beam, θ is the beam angle, τ is the input torque, and τ_d is the disturbance torque. The control objective is to maintain the ball at the center of the beam.

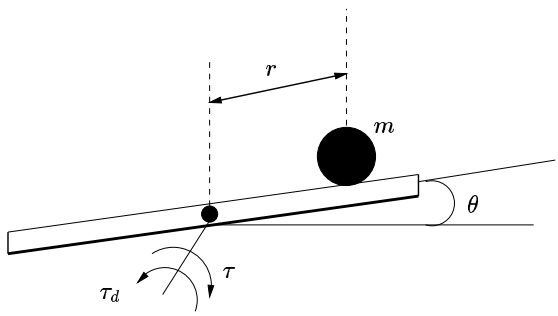

Figure 7.1: The Ball and Beam system

After plant linearization, the following model is obtained

$$\begin{aligned}
\dot{x}_1 &= x_2 \\
\dot{x}_2 &= -\frac{m\,g}{J_B}\,x_3 - \frac{1}{J_B}\,d + \frac{1}{J_B}\,u \\
\dot{x}_3 &= x_4 \\
\dot{x}_4 &= -\frac{m\,g\,a^2}{m\,g\,a^2 + J_b}\,x_1
\end{aligned}$$

where $x_1 = \theta$, $x_2 = \dot{\theta}$, $x_3 = r$, $x_4 = \dot{r}$, $d = \tau_d$, and $u = \tau$. The following nominal parameter values are considered: $m = 0.1\,[kg]$, $a = 0.015\,[m]$, $J_b = 9 \times 10^{-6}\,[N.m.sec^2]$, $J_B = 6.1 \times$

10^{-3} $[N.m.sec^2]$, and $g = 10$ $[m/sec^2]$. We also consider the following sensor models

$$y_1 = x_1 + f_1 + \nu_1$$
$$y_2 = x_3 + f_2 + \nu_2$$

where y_1 and y_2 are the sensor outputs, f_1 and f_2 are the sensor faults, and ν_1 and ν_2 are the sensor noises. The control performance measure z_c and detection performance measure z_d are

$$z_c = \begin{pmatrix} W_{c_{11}}\, y_1 \\ W_{c_{12}}\, y_2 \\ W_{c_2}\, u \end{pmatrix}, \quad z_d = \begin{pmatrix} W_{d_1}\, f_1 - \hat{f}_1 \\ W_{d_2}\, f_2 - \hat{f}_2 \end{pmatrix}$$

where $\hat{f}_1$ and $\hat{f}_2$ are the estimates of the faults and the weighting matrices have been chosen as follows

$$W_{c_{11}} = \frac{30}{s+1},\ W_{c_{12}} = \frac{20}{s+.05}, \quad W_{c_2} = 1,\ W_{d_1} = \frac{19}{s+2},\ W_{d_2} = \frac{10}{s+2}.$$

The controller/detector is obtained by using the algorithm described in Section 6. In order to analyze the responses of the system, f_1, f_2 and d have been applied on the ball and beam system as shown in Figure 8.5. The results of the nonlinear simulation are shown in Figures 8.7, and 8.6, see Appendix II. As can be seen in Figure 8.7, stability and disturbance rejection are good. Also, these responses show that the closed-loop system has a satisfactory behavior even if faults are present. Concerning $\hat{f}_1$ and $\hat{f}_2$, as shown in Figure 8.6, they can be used to detect and isolate each fault, seperately.

8 Conclusion

We have shown that a mixed $\mathcal{H}_2/\mathcal{H}_\infty$ framework is an appropriate setup to formulate the SFDC problem. A fundamental separation theorem presented in this paper provides a first solution to this multiobjective problem, but this result is not always satisfactory because it leads to a high order controller/detector system. A second solution is then presented, motivated by previous works on mixed $\mathcal{H}_2/\mathcal{H}_\infty$ control, This solution leads to the design of a controller/detector system of reasonable complexity. The validity of the proposed method has been illustrated via an example.

The methodology presented in this paper is constructive and can be implemented easily using standard softwares tools such as **Scilab** and **Matlab**. We have developed **Scilab** programs which can be found in Appendix II.

REFERENCES

Bernstein, D. S. and W. M. Haddad (1989) "LQG control with an $\mathcal{H}_\infty$ performance bound: A Riccati equation approach", *IEEE Trans. Automat. Contr.*, **vol. 34**, no.3, pp. 293-305.

Chen, Y. and R. J. Patton (1999) **Robust Model-Based Fault Diagnosis for Dynamic Systems**, *Kluwer Academic Publishers, London, Prentice-Hall, 1999*.

Green, M. and D. J. Limebeer (1995) **Linear Robust Control** , *Prentice-Hall, Englewood Cliffs, New Jersey*.

Khosrowjerdi, M. J., R. Nikoukhah, and N. Safari-Shad (2002) "Simultaneous fault detection and control problem", *In Proc. 10th Mediterranean Conference on Control and Automation (MED2002), Lisbon, Portugal.*

Khargonekar, P. P., and M. A. Rotea (1991) " Mixed $\mathcal{H}_2/\mathcal{H}_\infty$ Control: A Convex Optimization Approach ", *IEEE Trans. Automat. Contr.*, **vol. 36**, no.7, pp. 824-837.

Nett, C. N., C. A. Jacobson, and A. T. Miller (1988), "An integrated approach to controls and diagnostics: the 4-parameter controller", *American Control Conference*, pp. 824-835.

Scherer, C. W, P. Gahinet, and M. Chilali (1997) " Multi-objective output feedback control", *IEEE Trans. Automat. Contr.*, **vol. 17**, no.2, pp. 138-149.

Tyler, M. L., and M. Morari (1994) "Optimal and robust design of integrated control and diagnostic modules", *American Control Conference*, pp. 287-293.

Stoustrup, J., M. J. Grimble, and H. Niemann (1997) " Design of integrated systems for the control and detection of actuator/sensor faults", *Sensor Review*, **vol. 17**, no.2, pp. 138-149.

Stoustrup, J., and H. Niemann (1996) "Multiobjective control for multivariable systems with mixed-sensitivity specifications", *International Journal of control*, **vol. 66**, no. 2, pp. 225-243.

Wu, N. E, and T. J. Chen (1996) "Feedback design in control reconfigurable system", *International Journal of robust and nonlinear control*, **vol. 6**, pp. 561-570.

Wu, N. E (1997) " Robust feedback design with optimized diagnostic performance", *TEEE Trans. Automat. Contr.*, **vol. 42**, pp. 1264-1268.

Appendix I:

A Solution to Mixed $\mathcal{H}_2/\mathcal{H}_\infty$ SFDC problem Based on Separation Theorem

As mentioned Section 6, the first approach to solving the mixed $\mathcal{H}_2/\mathcal{H}_\infty$ problem is to use separation theorem to transform it into an $\mathcal{H}_\infty$ problem and an $\mathcal{H}_2$ problem. We present this solution to the mixed $\mathcal{H}_2/\mathcal{H}_\infty$ SFDC problem.

According to Theorem 4.2, the solution to Problem 6.1 can be obtained through a two-step desgin approach as follows:

- **An $\mathcal{H}_\infty$ Problem :** Consider the configuration depicted in Figure 8.1. We first design a controller $\mathcal{K}_1$ that internally stabilizes the generalized plant P_c and achieves

$$\|T_1(\mathcal{K}_1)\|_\infty \leq \gamma$$

where $\gamma > 0$, T_1 is the closed-loop transfer function from w to z_c, and the generalized plant P_c is given by

$$P_c : \left\{ \begin{array}{lcl} \dot{x}_c & = & A_c\, x_c + B_{c1}\, w + B_{c_2}\, u \\ z_c & = & C_{c_1}\, x_c + D_{c_{12}}\, u \\ y & = & C_{c_2}\, x_c + D_{c_{21}}\, w \end{array} \right.$$

where $x_c \in \mathbb{R}^{n_c+n_p}$, $n_c = n_{c_1}+n_{c_2}$ is the order of the weighting matrix $W_c = \begin{pmatrix} W_{c_1}^T & W_{c_2}^T \end{pmatrix}^T$ chosen for control performance and n_p is the order of the open-loop plant G.

Using the well-known techniques from $\mathcal{H}_\infty$ theory, the $\mathcal{H}_\infty$ controller $\mathcal{K}_1$ is given by

$$\mathcal{K}_1 : \left\{ \begin{array}{lcl} \dot{v}_1 & = & M_1\, v_1 + N_1\, y \\ u & = & L_1\, v_1 \end{array} \right. \tag{8.1}$$

where $v_1 \in \mathbb{R}^{n_c+n_p}$ and

$$\begin{array}{rcl} M_1 & = & A_c + B_2\, L_1 - N_1\, C_{c_2} + \gamma^{-2} X_\infty {C_{c_1}}^T\, (\, C_{c_1} + D_{c_{12}}\, L_1), \\ N_1 & = & (X_\infty C_{c_2}^T + B_{c_1} {D_{c_{21}}}^T)(D_{c_{21}} D_{c_{21}}^T)^{-1}, \\ L_1 & = & -(D_{c_{12}}^T D_{c_{12}})^{-1}(B_{c_2}^T Y_\infty + D_{c_{12}}^T C_{c_1})(I - \gamma^{-2} X_\infty Y_\infty)^{-1}, \end{array}$$

where $X_\infty \geq 0$ and $Y_\infty \geq 0$ are the stabilizing solution to the following Riccati equations

$$\begin{array}{r} (A_c - B_{c_1} D_{c_{21}}^T (D_{c_{21}} D_{c_{21}}^T)^{-1} C_{c_2})^T X_\infty + X_\infty (A_c - B_{c_1} D_{c_{21}}^T (D_{c_{21}} D_{c_{21}}^T)^{-1} C_{c_2}) + \\ X_\infty (\gamma^{-2} {C_{c_1}}^T C_{c_1} - C_{c_2}^T (D_{c_{21}} D_{c_{21}}^T)^{-1} C_{c_2}) X_\infty + B_{c_1} B_{c_1}^T \\ -B_{c_1} D_{c_{21}}^T (D_{c_{21}} D_{c_{21}}^T)^{-1} D_{c_{21}} B_{c_1}^T = 0 \end{array} \tag{8.2}$$

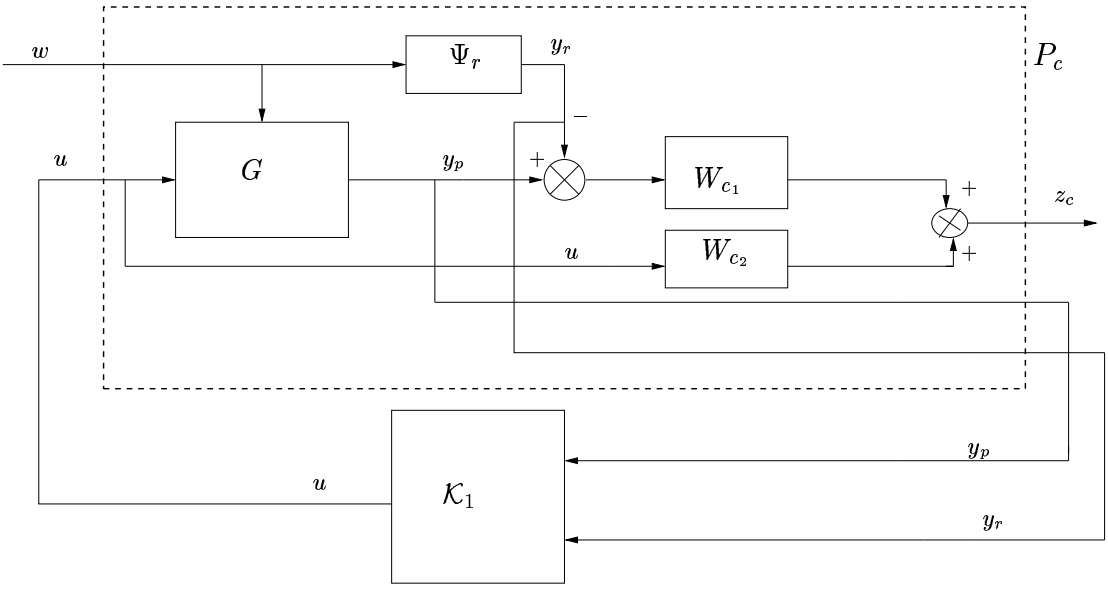

Figure 8.1: Setup for controller design

$$
\begin{aligned}
(A_c - B_{c_2}(D_{c_{12}}^T D_{c_{12}})^{-1} D_{c_{12}}^T C_{c_1}) Y_\infty + Y_\infty (A_c - B_{c_2}(D_{c_{12}}^T D_{c_{12}})^{-1} D_{c_{12}}^T C_{c_1})^T + \\
Y_\infty(\gamma^{-2} B_{c_1} B_{c_1}^T - B_{c_2}(D_{c_{12}}^T D_{c_{12}})^{-1} B_{c_2}^T) Y_\infty + C_{c_1}^T C_{c_1} \\
-C_{c_1}^T D_{c_{12}} (D_{c_{12}}^T D_{c_{12}})^{-1} D_{c_{12}}^T C_{c_1} = 0
\end{aligned}
\tag{8.3}
$$

The $\mathcal{H}_\infty$ controller $\mathcal{K}_1$ can be written as

$$
\mathcal{K}_1 : \left\{ \begin{array}{lcl} \dot{v}_1 & = & A_c\, v_1 + w_{worst} + B_{c_2}\, u + N_1\, (y - C_{c_2}\, v_1) \\ u & = & L_1\, v_1 \end{array} \right.
$$

where w_{worst} is given by

$$
w_{worst} := \gamma^{-2} X_\infty {C_{c_1}}^T\, (\, C_{c_1} + D_{c_{12}}\, L_1)\, v_1
$$

These equations have the structure of an observer-based controller.

- **An $\mathcal{H}_2$ Problem**: Consider the block diagram depicted in Figure 8.2. We can design the detector $\tilde{\mathcal{K}}_2$ that minimizes

$$
\|T_2(\tilde{\mathcal{K}}_2)\|_2
$$

where T_2 is the transfer function from $\tilde{w} = \begin{pmatrix} w^T & u^T \end{pmatrix}^T$ to z_d. The weighting transfer functions W_{d_1}, W_{d_2} and the plant G to be incorporated into the system description P_d as follows

$$P_d : \begin{cases} \dot{\tilde{x}} &= \tilde{A}\tilde{x} + \tilde{B}_1\,\tilde{w} + \tilde{B}_2\,\hat{f} \\ z_d &= \tilde{F}_1\,\tilde{x} + \tilde{F}_2\,\hat{f} \\ \tilde{y} &= \tilde{C}\,\tilde{x} + \tilde{D}\,\tilde{w} \end{cases}$$

where $\tilde{x} = \begin{pmatrix} {x_p}^T & {x_d}^T \end{pmatrix}^T \in \mathbb{R}^{n_d+n_p}$, $n_d = n_{d_1} + n_{d_2}$ is the order of the weighting matrix $W_d = \begin{pmatrix} W_{d_1}^T & W_{d_2}^T \end{pmatrix}^T$ chosen for detection performance, $\tilde{y} = \begin{pmatrix} y^T & u^T \end{pmatrix}^T \in \mathbb{R}^{p+m}$, $\tilde{w} = \begin{pmatrix} w^T & u^T \end{pmatrix}^T \in \mathbb{R}^{r+m}$, and

$$\tilde{A} = \begin{pmatrix} A_p & 0 \\ 0 & A_d \end{pmatrix},\ \tilde{B}_1 = \begin{pmatrix} B_{p_1} & B_{p_2} \\ B_{d_1} & 0 \end{pmatrix},\ \tilde{B}_2 = \begin{pmatrix} 0 \\ B_{d_2} \end{pmatrix},$$

$$\tilde{F}_1 = \begin{pmatrix} 0 & C_{d_1} \end{pmatrix},\ \tilde{F}_2 = D_{d_{12}},\ \tilde{C} = \begin{pmatrix} C_p & 0 \\ 0 & 0 \end{pmatrix},\ \tilde{D} = \begin{pmatrix} D_{p_1} & 0 \\ 0 & I \end{pmatrix}$$

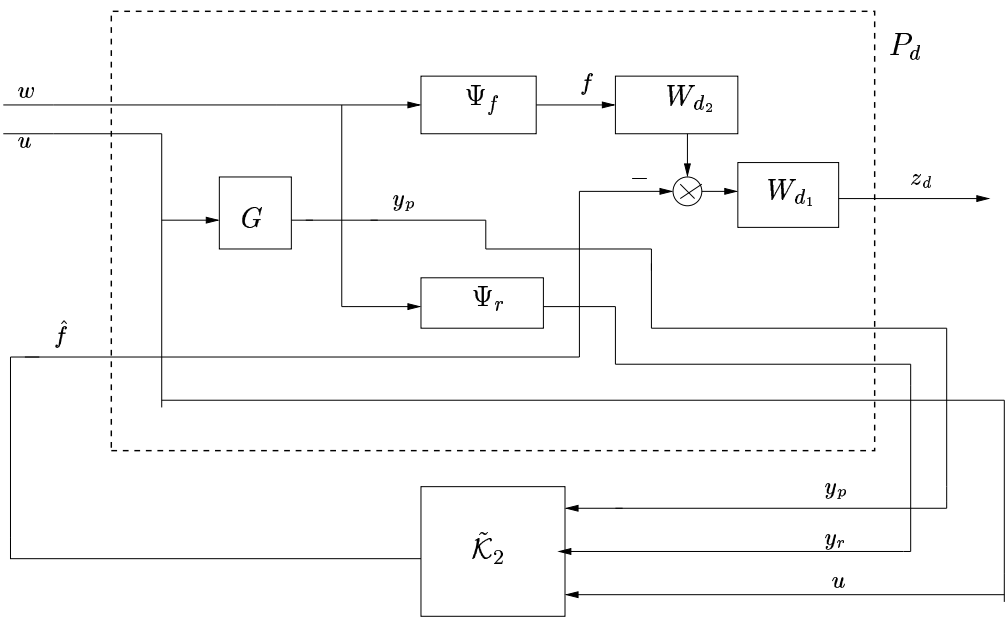

Figure 8.2: Setup for detector design

Because $(\tilde{A}, \tilde{B}_2)$ is not a stabilizable pair, the generalized plant P_d is not stabilizable in the sense of the internal stability defined in Section 2, unless A_p is asymptotically stable (the

open-loop plant G is stable). In this case, the internal stability requirement is dropped. Using $\mathcal{H}_2$ optimal theory, the $\mathcal{H}_2$ detector $\tilde{\mathcal{K}}_2$ is given by

$$\tilde{\mathcal{K}}_2 : \left\{ \begin{array}{lcl} \dot{v}_2 & = & \tilde{M}_2\, v_2 + \tilde{N}_2\, \tilde{y} \\ \hat{f} & = & \tilde{L}_2\, v_2 \end{array} \right. \tag{8.4}$$

where $v_2 \in \mathbb{R}^{n_p+n_d}$

$$\begin{array}{rcl} \tilde{M}_2 & = & \tilde{A} + \tilde{B}_2\, \tilde{L}_2 - \tilde{N}_2\, \tilde{C}, \\ \tilde{N}_2 & = & (Y\tilde{C}^T + \tilde{B}_1\, \tilde{D}^T)\, \tilde{V}^{-1}, \\ \tilde{L}_2 & = & -\tilde{R}^{-1}\, (\tilde{B}_2^T\, X + \tilde{F}_2^T\, \tilde{F}_1). \end{array}$$

$X \geq 0$ and $Y \geq 0$ are the solutions to the following Riccati equations

$$\begin{array}{r} (\tilde{A} - \tilde{B}_2\tilde{R}^{-1}\tilde{F}_2^T\tilde{F}_1)^T X + X(\tilde{A} - \tilde{B}_2\tilde{R}^{-1}\tilde{F}_2^T\tilde{F}_1) - X\tilde{B}_2\tilde{R}^{-1}\tilde{B}_2^T X_2 \\ +\tilde{F}_1^T(I - \tilde{F}_2\tilde{R}^{-1}\tilde{F}_2^T)\tilde{F}_1 = 0. \end{array}$$

$$\begin{array}{r} (\tilde{A} - \tilde{B}_1\tilde{D}^T\tilde{V}^{-1}\tilde{C})Y + Y(\tilde{A} - \tilde{B}_1\tilde{D}^T\tilde{V}^{-1}\tilde{C})^T - Y\tilde{C}^T\tilde{V}^{-1}\tilde{C}Y \\ +\tilde{B}_1(I - \tilde{D}^T\tilde{V}^{-1}\tilde{D})\tilde{B}_1^T = 0 \end{array} \tag{8.5}$$

where $\tilde{R} = \tilde{F}_2^T\tilde{F}_2$ and $\tilde{V} = \tilde{D}\tilde{D}^T$. Let partition the matrices X and Y as

$$X = \begin{pmatrix} X_{11} & X_{12} \\ X_{12}^T & X_{22} \end{pmatrix}, \quad Y = \begin{pmatrix} Y_{11} & Y_{12} \\ Y_{12}^T & Y_{22} \end{pmatrix}$$

then the above Riccati equations can be written as follows

$$\left\{ \begin{array}{l} A_p^T\, X_{11} + X_{11}\, A_p - X_{12}\, B_{d_2}\, (D_{d_{12}}^T D_{d_{12}})^{-1}\, B_{d_2}^T\, X_{12} = 0 \\ \\ A_p^T\, X_{12} + X_{12}\, A_2 - X_{12}\, B_{d_2}\, (D_{d_{12}}^T D_{d_{12}})^{-1}\, B_{d_2}^T\, X_{22} = 0 \\ \\ (A_d - B_d\, (D_{d_{12}}^T D_{d_{12}})^{-1}\, D_{d_{12}}^T\, C_{d_1})^T\, X_{22} + X_{22}\, (A_d - B_d\, (D_{d_{12}}^T D_{d_{12}})\, D_{d_{12}}^T\, C_{d_1}) \\ -X_{22}\, B_1\, X_{22} + \\ C_{d_1}^T (I - D_{d_{12}}\, (D_{d_{12}}^T D_{d_{12}})^{-1}\, D_{d_{12}}^T)\, C_{d_1} = 0. \end{array} \right. \tag{8.6}$$

$$\left\{ \begin{array}{l} (A_p - B_{p_1}\, D_{p_1}^T (D_{p_1} D_{p_1}^T)^T\, C_p)\, Y_{11} + Y_{11}\, (A_p - B_{p_1}\, D_{p_1}^T\, (D_{p_1} D_{p_1}^T)^T\, C_p)^T - \\ Y_{11}\, C_p^T (D_{p_1} D_{p_1}^T)^{-1}\, C_p\, Y_{11} + B_{p_1} (I - D_{p_1}^T\, (D_{p_1} D_{p_1}^T)^{-1}\, D_{p_1})\, B_{p_1}^T = 0 \\ \\ (A_p - B_{p_1}\, D_{p_1}^T\, (D_{p_1} D_{p_1}^T)^T\, C_p)\, Y_{12} + Y_1\, A_{21}^T + Y_{12}\, A_d^T - Y_{11}\, C_p^T\, (D_{p_1} D_{p_1}^T)^{-1}\, C_p\, Y_{12} + \\ B_{p_1}\, (I - D_{p_1}^T (D_{p_1}\, D_{p_1}^T)^{-1}\, D_{p_1})\, B_{d_1}^T = 0 \\ \\ -B_{d_1}\, D_{p_1}^T\, (D_{p_1}\, D_{p_1}^T)^{-1}\, C_p\, Y_{12} + A_d\, Y_{22} + Y_{12}^T\, (-B_{d_1}\, D_{p_1}^T\, (D_{p_1} D_{p_1}^T)^{-1}\, C_p)^T + Y_{22}\, A_d^T - \\ Y_{12}^T\, C_p^T\, (D_{p_1} D_{p_1}^T)^{-1}\, C_p\, Y_{12} + B_{d_1}\, (I - D_{p_1}^T\, (D_{p_1} D_{p_1}^T)^{-1}\, D_{p_1})\, B_{d_1}^T = 0. \end{array} \right.$$

It can be verified that $X_{11} = 0$ and $X_{12} = X_{21}^T = 0$. Also, the matrix $\tilde{M}_2$ of the controller $\tilde{\mathcal{K}}_2$ can be written as

$$\tilde{\mathcal{M}}_2 = \begin{pmatrix} \tilde{\mathcal{M}}_{22} & 0 \\ \tilde{\mathcal{M}}_{21} & \tilde{\mathcal{M}}_{33} \end{pmatrix}$$

where

$$\begin{aligned} \tilde{\mathcal{M}}_{22} &= A_p - B_{p_1} D_{p_1}^T (D_{p_1} D_{p_1}^T)^{-1} C_p - Y_{11} C_p^T (D_{p_1} D_{p_1}^T)^{-1} C_p \\ \tilde{\mathcal{M}}_{21} &= -(Y_{12}^T C_p^T + B_{d_1} D_{p_1}^T) (D_{p_1} D_{p_1}^T)^{-1} C_p \\ \tilde{\mathcal{M}}_{33} &= A_d - B_d (D_{d_{12}}^T D_{d_{12}})^{-1} D_{d_{12}}^T C_{d_1} - B_{d_2} (D_{d_{12}}^T D_{d_{12}})^{-1} B_{d_{12}}^T X_{22}. \end{aligned}$$

If $X_{22} \geq 0$ and $Y_{11} \geq 0$ are respectively the stabilizing solutions to the above reduced order Riccati equations for X_{22} and Y_{11}, then $\tilde{\mathcal{M}}_{22}$ and $\tilde{\mathcal{M}}_{33}$ are Hurwitz. Consequently, $\tilde{\mathcal{M}}_2$ is Hrwitz. Thus we have proved the following Lemma.

Lemma 8.1 *Consider the system illustrated in Figure 8.2. If $Y_{22} \geq 0$ and $X_{11} \geq 0$ are respectively stabilizing solution to the reduced order Riccati equations for X_{22} and Y_{11}, then the $\mathcal{H}_2$-detector $\tilde{\mathcal{K}}_2$ is stable and $(\mathcal{K}_1, \tilde{\mathcal{K}}_2) \in \mathcal{S}_2$.*

After some manipulations, the detector $\tilde{\mathcal{K}}_2$ can also be written as

$$\tilde{\mathcal{K}}_2 : \left\{ \begin{array}{lcl} \dot{v}_2 &=& \tilde{A}\, v_2 + \tilde{B}_2\, \hat{f} + \tilde{B}_{p_2}\, u + \tilde{N}_{21}\, (y - C_p\, v_{21}) \\ \hat{f} &=& \tilde{L}_2\, v_2 \end{array} \right.$$

where $v_2 = \begin{pmatrix} v_{21}^T & v_{22}^T \end{pmatrix}^T \in \mathbb{R}^{(n_p+n_d)}$, $v_{21} \in \mathbb{R}^{n_p}$, $v_{22} \in \mathbb{R}^{n_d}$, and

$$\tilde{B}_{p_2} = \begin{pmatrix} B_{p_2} \\ 0 \end{pmatrix}, \quad \tilde{N}_{21} = (Y \tilde{C}^T + \tilde{B}_1\, \tilde{D}^T) \begin{pmatrix} (D_{p_1} D_{p_1}^T)^{-1} \\ 0 \end{pmatrix}$$

These equations have the structure of an observer-based controller.

This two-step design approach prodides an optimal solution to the mixed $\mathcal{H}_2/\mathcal{H}_\infty$ problem. Thus the controller/detector K in Problem 6.1 is given by

$$K : \left\{ \begin{array}{lcl} \begin{pmatrix} \dot{v}_1 \\ \dot{v}_2 \end{pmatrix} &=& \begin{pmatrix} \mathcal{M}_1 & 0 \\ \tilde{B}_{p_2}\, L_1 & \mathcal{M}_2 \end{pmatrix} \begin{pmatrix} \dot{v}_1 \\ \dot{v}_2 \end{pmatrix} + \begin{pmatrix} N_1 \\ \tilde{N}_{21} \end{pmatrix} y \\ u &=& L_1\, v_1 \\ \hat{f} &=& L_2\, v_2 \end{array} \right. \tag{8.7}$$

where $v = \begin{pmatrix} v_1^T & v_2^T \end{pmatrix} \in \mathbb{R}^{2\, n_p+n_c+n_d}$. The following algorithm summerizes the design process for a separation design.

Algorithm II: A mixed $\mathcal{H}_2/\mathcal{H}_\infty$ approach

- Step 1: Compute the sabilizing solutions $X_\infty \geq 0$ and $Y_\infty \geq 0$ using (8.2) and (8.3).
- Step 2: Compute the $\mathcal{H}_\infty$-controller $\mathcal{K}_1$ using (8.1).
- Step 3: Set $X_{11} = 0$ and $X_{12} = 0$. Compute the stabilizing solution X_{22} and $Y \geq 0$ using (8.6) and (8.5).
- Step 4: Compute the $\mathcal{H}_2$-detector $\tilde{\mathcal{K}}_2$ using (8.4).
- Step 4: Compute the controller/detector K using (8.7).

An undesirable feature of this two-step design approach is that the order of the controller/detector $(\mathcal{K}_1, \tilde{\mathcal{K}}_2)$ is $n_c + n_d + 2\, n_p$ which is very high order for most practical applications. This complexity comes from the fact that the $\mathcal{H}_\infty$-controller $\mathcal{K}_1$ and the $\mathcal{H}_2$-detector $\tilde{\mathcal{K}}_2$ have the structure of an observer. As shown in Section 6, simultaneous design can be used to reduce controller/detector order by using the fact that both units use internally an observer.

Appendix II:

Computer Programs & Simulation Results in Scilab for the Ball & Beam system

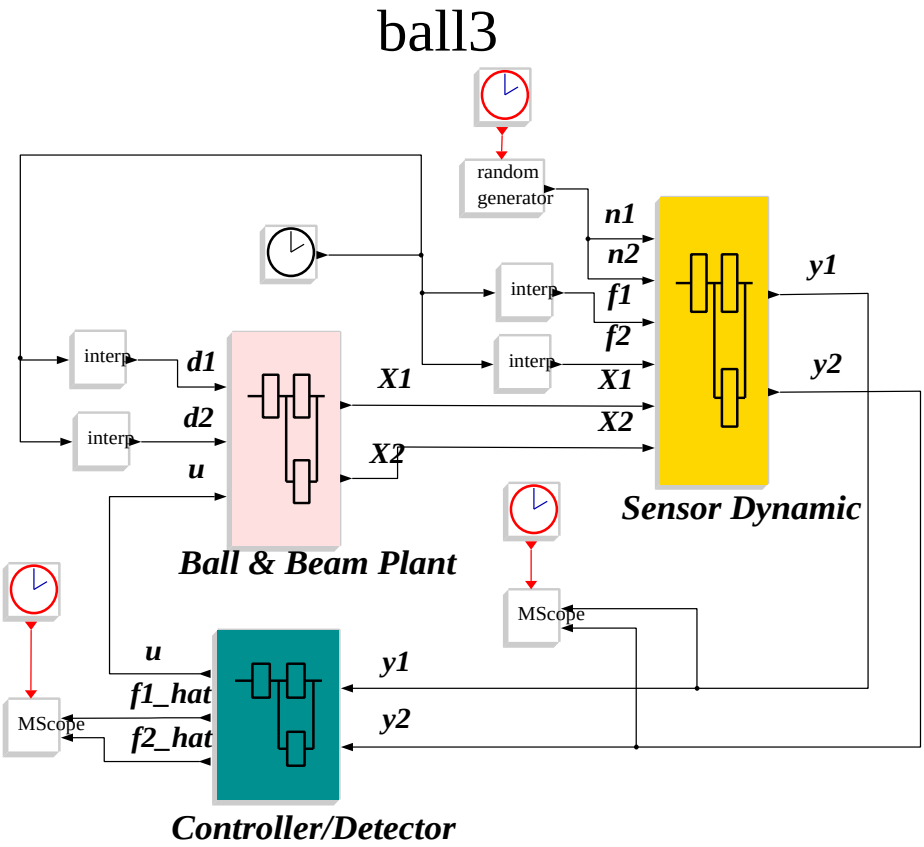

Figure 8.3: **Nonlinear Simulation in Scicos**

```
// Computer program in Scilab for the design of
// the controller/detector for the ball and beam system

lines(0)

getf('/home/khosrowjerdi/sfdcm')

// Nominal Parameter Values for Ball and Beam

a=1.5e-2;
Jb=9e-6;
JB=6.1e-3;
m=.1;
g=10;
epp1=1;
rshow=1;
gamma0=200;
alpha=1;

// Initial Condition

x0=[.1;0;.1;0];

// Linear Model

Ap=[0 1 0 0;0 0 -(m*g)/JB 0;0 0 0 1;-g/(1+Jb/(m*a^2)) 0 0 0];
Bp1=[0 0 0;0 0 -1/JB;0 0 0;0 0 0];
Bp2=[0;1/JB;0;0];
Cp1=[1 0 0 0;0 0 1 0];
Dp1=[1 0 0;0 1 0];

// For linear simulation in Scicos

App=[0 1 0 0;0 0 -(m*g)/JB 0;0 0 0 1;-g/(1+Jb/(m*a^2)) 0 0 0];
Bpp=[Bp1 Bp2];
Cpp=Cp1;
Dpp=[Dp1 zeros(2,1)];

// Constructing Gc (G & Wc)

b1=1;
k1=30;
b2=.05;
k2=20;
k3=1;
```

```
Ac=[0 1 0 0 0 0;0 0 -(m*g)/JB 0 0 0;0 0 0 1 0 0;...
    -g/(1+Jb/(m*a^2)) 0 0 0 0 0;1 0 0 0 -b1 0;0 0 1 0 0 -b2];
Bc1=[0 0 0 0 0;0 0 (-1/JB)*alpha 0 0;0 0 0 0 0;0 0 0 0 0;...
    1 0 0 1 0;0 1 0 0 1];
Bc2=[0;1/JB;0;0;0;0];
Cc1=[0 0 0 0 k1 0;0 0 0 0 0 k2;0 0 0 0 0 0];
Dc12=[0;0;k3];
Cc2=[1 0 0 0 0 0;0 0 1 0 0 0];
Dc21=[1 0 0 1 0;0 1 0 0 1];

[nc,nc]=size(Ac);
[nc,r]=size(Bc1);
[nc,m]=size(Bc2);
[s1,nc]=size(Cc1);
[p,nc]=size(Cc2);

// Constructing Gd

s=%s;
W1=[(s+1)/(s+1) 0;0 (s+2)/(s+2)];
W2=[19/(s+2) 0;0 10/(s+2)];
S1=syslin('c',W1);
S2=syslin('c',W2);
WS1=tf2ss(W1);
WS2=tf2ss(W2);
A1=WS1(2);B1=WS1(3);
C1=WS1(4);D1=WS1(5);

// If Wd1 is nonminimum phase ( Computing a inner function)

AA=A1-B1*inv(D1'*D1)*D1'*C1;
BB=B1*inv(D1'*D1)*B1' ;
CC=C1'*C1-C1'*D1*inv(D1'*D1)*D1'*C1 ;
X=riccati(AA,BB,CC,'c','eigen');

C1=(D1'*D1)^(-.5)*(D1'*C1+B1'*X);
D1=(D1'*D1)^(.5);

A2=WS2(2);
B2=WS2(3);
C2=WS2(4);
D2=WS2(5);
[n1,n1]=size(A1);
[n2,n2]=size(A2);
[n1,q]=size(B1);
```

```
[nb2,q]=size(B2);

Ad=[A1 B1*C2;zeros(n2,n1) A2];
Bd1=[zeros(n1,r);B2 zeros(nb2,r-q)];
Bd2=[-B1;zeros(n2,q)];
Cd1=[C1 D1*C2];
Dd12=-D1;

[nd,nd]=size(Ad);
[nd,q]=size(Bd2);
[s2,nd]=size(Cd1);


Gc=syslin('c',Ac,[Bc1 Bc2],[Cc1;Cc2],[zeros(s1,r) Dc12;...
    Dc21 zeros(p,m)]);
Gd=syslin('c',Ad,[Bd1 Bd2],[Cd1],[zeros(s2,r) Dd12]);

ncon=m;
nmea=p;
nfau=q;

rshow=1;
gam_min=0;
gam_max=1e7;
tol=1e-12;

// Computing controller/detecor

[M,N,L1,L2,gam_opt,normh2,normh2_opt,normhinf]=sfdcm(Gc,Gd,...
    ncon,nmea,nfau,gam_min,gam_max,tol,rshow);

L=[L1;L2];
[nM,dM]=size(M);
[nN,dN]=size(N);
[nL,dL]=size(L);
H=zeros(nL,dL);

// Initial Condition for the controller/detector
v0=zeros(nM,1);
```

```
function [M,N,L1,L2,gam_opt,normh2,normh2_opt,normhinf]=sfdcm(Gc,Gd,ncon,...
    nmea,nfau,gam_min,gam_max,tol,rshow)

//  This function computes the optimal mixed H2/Hinf  controller/detector
//  with gamma iteration.

//  The following system is considered:
//
//                                      y   =  Gc21(s) w  + Gc22(s) uc
//
//                                      Zc  =  Gc11(s) w  + Gc12(s) uc
//
//                                      Zd  =  Gd11(s) w  + Gd12(s) f^
//

//  where y,uc,fhat,y_d,Z_d,Z_c are the mesurement output,
// the control input, the estimate of the fault, the disturbances(noises),
// the desired output,the detection objective, the rgulated output
// and the fault estimation, respectively. The transfer...
// functions G1, G2, G3, G4, Gf, Gn, Gs must be in in transfer form.

//
//                                      ----------------
//                       w=[f;d;y_d]   |                |      z=[Zc;Zd]
//                        ------------>|                |---------------->
//                                     |  Generalized   |
//                                     |    Plant       |      y=[y_p;y_d]
//                                     |                |--------
//                                uc   |     G(s)       |        |
//                             ------>|                |        |
//                            |        ----------------         |
//                            |                                 |
//                            |                                 |
//                            |        -- -------------         |
//                   f^       |       |                |        |
//                 <-----------|-------|      FDI and   |        |
//                            |       |    Controller  |        |
//                            |       |                |<-------
//                             -------|        K       |
//                                    |                |
//                                     ----------------
```

```
//  Also, This function computes H2-norm of the transfer fuction Tzw...
in the above cases, where
//
//                                                                  -1
//                         Tzw(s) = G11(s)+G12(s)K(s)(I-G22(s)K(s))G21(s)
//



//  The input and output arguments are

// Gc: Control Objective Function
//                                          Gc= [Ac    Bc1    Bc2  ]
//                                              [Cc1   0      Dc12 ]
//                                              [Cc2   Dc21   0    ]

// Gd: Detection Objective Function
//                                          Gd= [Ad    Bd1    Bd2  ]
//                                              [Cd1   0      Dd12 ]

// ncon: the number of the control inputs, n(uc)
// nmea: the number of the measurement, n(y)
// nfau: the number of the faults, n(f)
// gam_min, gam_max: minimum and maximum of gamma for gamma iteration
// gam_opt: The optimal value of gamma
// H2norm:   ||T2||_2
// Hinfnorm: ||T1||_inf

///                                              dv/dt=Mv+Ny
///             controller/detector    K(s):     uc=L1v
///                                              f_hat=L2v


getf('/home/khosrowjerdi/h2des')
getf('/home/khosrowjerdi/hinfdes')

//---------------------------------------------
//  Control Objectives Description, Zc=Gc[w,u]
//---------------------------------------------

Ac=Gc(2);
Bc=Gc(3);
Cc=Gc(4);
Dc=Gc(5);
```

```
[rAc,cAc]=size(Ac);
[rBc,cBc]=size(Bc);
[rCc,cCc]=size(Cc);
[rDc,cDc]=size(Dc);

Bc1=Bc(:,1:cBc-ncon);
Bc2=Bc(:,cBc-ncon+1:cBc);
Cc1=Cc(1:rCc-nmea ,:);
Dc12=Dc(1:rCc-nmea,cDc-ncon+1:cDc);
Cc2=Cc(rCc-nmea+1:rCc,:);
Dc21=Dc(rCc-nmea+1:rCc,1:cBc-ncon);

//-------------------------------------------------------
//  Fault Detection Objectives Description, Zd=Gd[w,f^]
//-------------------------------------------------------

Ad=Gd(2);
Bd=Gd(3);
Cd=Gd(4);
Dd=Gd(5);

[rBd,cBd]=size(Bd);
[rCd,cCd]=size(Cd);
[rDd,cDd]=size(Dd);

Bd1=Bd(:,1:cBd-nfau);
Bd2=Bd(:,cBd-nfau+1:cBd);
Cd1=Cd;
Dd12=Dd(:,cDd-nfau+1:cDd);

[np,np]=size(Ac);
[np,r]=size(Bc1);
[np,m]=size(Bc2);
[nd,nd]=size(Ad);
[nd,q]=size(Bd2);
[s1,np]=size(Cc1);
[s2,nd]=size(Cd1);
[p,np]=size(Cc2);
n=np+nd;

//-------------------------------------------------
// Preparing a Setup for Mixed H2/H_infinity Desgin
//-------------------------------------------------

A=[Ac zeros(np,nd);zeros(nd,np) Ad];
B1=[Bc1;Bd1];
```

```
B2=[Bc2;zeros(nd,m)];
B3=[zeros(np,q);Bd2];
E1=[Cc1 zeros(s1,nd)];
E2=Dc12;
F1=[zeros(s2,np) Cd1];
F2=Dd12;
C=[Cc2 zeros(p,nd)];
D=Dc21;

R1=F1'*F1;
R2=F2'*F2;
R12=F1'*F2;
Rb1=R1-R12*inv(R2)*R12';
Rd1=Cd1'*Cd1-Cd1'*Dd12*inv(R2)*Dd12'*Cd1;

S2=E2'*E2;
S12=E1'*E2;
S1=E1'*E1-S12*inv(S2)*S12';
Sc1=Cc1'*Cc1-Cc1'*Dc12*inv(S2)*Dc12'*Cc1;

V1=B1*B1';
V2=D*D';
V12=B1*D';

Sig1=B2*inv(S2)*B2';
Sig2=B3*inv(R2)*B3';
Sig3=B2*inv(S2)*S12'+B3*inv(R2)*R12';
Sigc1=Bc2*inv(S2)*Bc2';
Sigd2=Bd2*inv(R2)*Bd2';
Sigb=C'*inv(V2)*C;
Sigb1=Cc2'*inv(V2)*Cc2;


//-----------------
// CHECK HYPOTHESES
//-----------------

if q > p then
  write(%io(2),'WARNING: there are too many faults.');
end

if m > s1 then
  write(%io(2),'WARNING: the dimensions of Dc12 are inadequate');
end

if q > s2 then
```

```
  write(%io(2),'WARNING: the dimensions of Dd12 are inadequate');
end

if p > r then
  write(%io(2),'WARNING: the dimensions of Dc21 are inadequate');
end

[u12,s12,v12]=svd(Dc12);
s12=s12(1:m,:);
[ud12,sd12,vd12]=svd(Dd12);
sd12=sd12(1:q,:);
ud12=ud12(:,1:q);        //Dd12 = ud12 sd12 vd12' with sd12 square diagonal
[u21,s21,v21]=svd(Dc21);
s21=s21(:,1:p);
u12=u12(:,1:m);          //Dc12 = u12 s12 v12' with s12 square diagonal
v21=v21(:,1:p);          //Dd21 = u21 s21 v21'

//---------------------------------------
//rank condition on Dc12, Dd12 and Dc21
//---------------------------------------

if s12(m,m)/s12(1,1) <= 100*%eps then
  write(%io(2),'WARNING: Dc12 is not full rank at the machine precision');
end

if sd12(q,q)/s12(1,1) <= 100*%eps then
  write(%io(2),'WARNING: Dd12 is not full rank at the machine precision');
end

if s21(p,p)/s21(1,1) <= 100*%eps then
  write(%io(2),'WARNING: Dc21 is not full rank at the machine precision');
end

//----------------------------------------
//(Ac,Bc2,Cc2) stabilizable + detectable
//----------------------------------------

noa=maxi(abs(Ac));  nob2=maxi(abs(Bc2)); noc2=maxi(abs(Cc2));

ns=st_ility(syslin('c',Ac,Bc2,Cc2),1.0e-10*maxi(noa,nob2));
if ns<np then
  write(%io(2),'WARNING: (A,Bc2) is nearly unstabilizable');
end

ndd=dt_ility(syslin('c',Ac,Bc2,Cc2),1.0e-10*maxi(noa,noc2));
if 0<ndd & ndd<np then
```

```
  write(%io(2),'WARNING: (Cc2,Ac) is nearly undetectable');
end

if max(real(spec(Ad))) > 0
   error('Ad is not Hurwitz!!!')
end


//*******************************************************
//  GAMMA ITERATION STARTS
//*******************************************************

upper=gam_max;  UPP=gam_max;
lower=gam_min;  LOW=gam_min;
dvv=1.98;
egam=1;
gamma0=(lower+upper)/dvv;     //test point gamma = middle of [lower,upper]

while  egam > tol

gamma0_old=gamma0;

disp(' ')
disp(' ')
disp('------------------------------------------------------------ ')
disp(' ')
write(%io(2),[lower,gamma0,upper],'(''min,cur,max = '',3e20.10)');
disp(' ')
disp('------------------------------------------------------------ ')
disp(' ')
disp(' ')
disp(' ')

//---------------------------
// Search window management:
//---------------------------
//   If the gamma-iteration runs into one of the initial arbitrary bounds
//   LOW or UPP, extend the search window to allow for continuation

if gamma0<10*LOW then lower=LOW/10; LOW=lower; end
                    // expand search window toward gamma<<1
if gamma0>UPP/10 then upper=UPP*10; UPP=upper; end

  // expand search window toward gamma>>1

DONE=0    //DONE=1 indicates that the current gamma has been classified and
```

```
          //the next iteration can start

//---------------------------
// Computaion of Q1, Q12, Q2
//---------------------------

AA=(A-V12*V2^(-1)*C)';
BB=-gamma0^(-2)*(E1'*E1)+Sigb;
CC=V1-V12*inv(V2)*V12';
Q=riccati(AA,BB,CC,'c','eigen');

Q1=Q(1:np,1:np);
Q12=Q(1:np,np+1:n);
Q2=Q(np+1:n,np+1:n);
QV=(V12*inv(V2)*C-B2*inv(S2)*S12')*Q+Q*(V12*inv(V2)*C-B2*inv(S2)*S12')'-...
gamma0^(-2)*Q*S12*inv(S2)*S12'*Q+V12*inv(V2)*V12';

QV1=QV(1:np,1:np);
QV12=QV(1:np,np+1:n);
QV2=QV(np+1:n,np+1:n);

//---------------------------------------------
// Computation of Qh1, Note: X=gamma0^(-2)*Qh1
//---------------------------------------------

AA=(Ac+gamma0^(-2)*Q1*Sc1-Bc2*inv(S2)*Dc12'*Cc1)';
BB=-Sc1;
CC=Q1*gamma0^(-2)*Sigb1*Q1-Sigc1+gamma0^(-2)*QV1;
X=riccati(AA,BB,CC,'c','eigen');

if min(real(spec(X))) >0 then
   Qh1=gamma0^(2)*X;
   state_Q_hat='Stabilizing Solution';
 else
   X=-riccati(-AA,BB,CC,'c','eigen');
   Qh1=gamma0^(2)*X;
   state_Q_hat='Antistabilizing Solution';
 end

//---------------------------------------------
//        Linear Matrix Equations (LME's)
//
//
//     N1*Qh12+Qh12*N2'=N3
//     N2*Qh2+Qh2*N2'=N4
//
```

```
//-------------------------------------------


//-----------------------------------
// Computaion of Qh12 & Qh2
//-----------------------------------

N1=[Ac+gamma0^(-2)*(Q1+Qh1)*Sc1-Bc2*inv(S2)*Dc12'*Cc1];
N2=[Ad-Bd2*inv(R2)*Dd12'*Cd1];
N3=-[gamma0^(-2)*Qh1'*Sc1*Q12+Q1*Sigb1*Q12+QV12];

//-------------------
// Computaion of Qh2:
//-------------------

AA=N1  ;
BB=N2';
CC=N3;
Qh12=sylv(AA,BB,CC,'c');

//-------------------
// Computaion of Qh2:
//-------------------

N4=-[QV2+(gamma0^(-2)*Q12'*Sc1)*Qh12+Qh12'*(gamma0^(-2)*Sc1*Q12)]-...
    [gamma0^(-2)*Qh12'*Sc1*Qh12+Q12'*Sigb1*Q12];

AA=N2  ;
BB=N2';
CC=N4;
Qh2=sylv(AA,BB,CC,'c');

//----------------------------
// Constructing Q and Qhat
//----------------------------

Qhat=[Qh1 Qh12;Qh12' Qh2];

//--------------------------------------
// FIRST TEST :  THE NONNEGATIVITY oF Q
//--------------------------------------

test2=min(real(spec(Q)));

if DONE==0 then
   if test2 < 0  then
```

```
      lower=gamma0; DONE=1;
      //write(%io(2),'Q is not nonnegative definite.');
   end
end

//---------------------------------------
//  FIRST TEST :  THE POSITIVITY oF Qhat
//---------------------------------------

test3=min(real(spec(Qhat)));

if DONE==0 then
   if test3 <= 0 then
      lower=gamma0;
      DONE=1;
      //write(%io(2),' Qhat is not positive definite.');
   end
end

//-------------------------------------
//  FIRST TEST :  THE STABILITY oF ACL
//-------------------------------------

if DONE==0 then

M=A-gamma0^2*Sig1*inv(Qhat)+gamma0^(-2)*Q*(E1'*E1)-Q*Sigb-...
    V12*inv(V2)*C-B2*inv(S2)*S12'*(Q+Qhat)*inv(Qhat)...
-B3*inv(R2)*R12'-Q*S12*inv(S2)*B2'*inv(Qhat)-...
gamma0^(-2)*Q*S12*inv(S2)*S12'*(Q+Qhat)*inv(Qhat);
N=Q*C'*inv(V2)+V12*inv(V2);
L1=-gamma0^2*inv(S2)*(B2+gamma0^(-2)*(Q+Qhat)*S12)'*inv(Qhat);
L2=-inv(R2)*(R12');

Acl=[A B2*L1+B3*L2;N*C M];

test4=max(real(spec(Acl)));

if test4 >= 0 then
   lower=gamma0; DONE=1;
   //write(%io(2),' Closed-loop system is not stable.');
end

end

//-----------------------------
//  Q>=0 & Qhat>0, Acl Hurwitz
```

```
//-----------------------------

if DONE==0
   upper=gamma0;
end

gamma0=(lower+upper)/dvv;
egam=abs(gamma0-gamma0_old);

end    // end while

//gam_opt=(lower+upper)/dvv;

gam_opt=gamma0_old;
gamma0=gamma0_old;

//-------------------------------
//  Riccati Check
//-------------------------------

ch0=(Ac+gamma0^(-2)*Q1*Sc1-Bc2*inv(S2)*Dc12'*Cc1)*Qh1+...
    Qh1*(Ac+gamma0^(-2)*Q1*Sc1-Bc2*inv(S2)*Dc12'*Cc1)'+...
gamma0^(-2)*Qh1*Sc1*Qh1+Q1*Sigb1*Q1-gamma0^2*Sigc1+QV1;

ch1=(A+gamma0^(-2)*Q*S1-Sig3)*Qhat+Qhat*(A+gamma0^(-2)*Q*S1-Sig3)'+...
gamma0^(-2)*Qhat*S1*Qhat+Q*Sigb*Q-gamma0^2*Sig1+QV;

ch2=(A-V12*V2^(-1)*C)*Q+Q*(A-V12*V2^(-1)*C)'+...
    Q*(gamma0^(-2)*(E1'*E1)-Sigb)*Q+V1-V12*inv(V2)*V12';


//-----------------------------------------------
//Computaion of Mixed H2/Hinf Controller/Detector
//-----------------------------------------------

M=A-gamma0^2*Sig1*inv(Qhat)+gamma0^(-2)*Q*(E1'*E1)-Q*Sigb-...
    V12*inv(V2)*C-B2*inv(S2)*S12'*(Q+Qhat)*inv(Qhat)...
-B3*inv(R2)*R12'-Q*S12*inv(S2)*B2'*inv(Qhat)-...
gamma0^(-2)*Q*S12*inv(S2)*S12'*(Q+Qhat)*inv(Qhat);
N=Q*C'*inv(V2)+V12*inv(V2);
L1=-gamma0^2*inv(S2)*(B2+gamma0^(-2)*(Q+Qhat)*S12)'*inv(Qhat);
L2=-inv(R2)*(R12');
K=syslin('c',M,N,[L1;L2],zeros(m+q,p));

//////////////////////////////////////////////////////////////
```

```
//----------------------------------------
// Computation of closed-loop system
//----------------------------------------

Acl=[A B2*L1+B3*L2;N*C M];
Bcl=[B1;N*D];
C1=[E1 E2*L1];
C2=[F1 F2*L2];

test8=max(real(spec(Acl)));

if test8 >= 0
  disp(gam_opt, 'the gamma')
  disp(' ')
  disp(' ')
  error(' << Closed-loop system is unstable, gamma is small !!!! >>')
end


//----------------------------------------
// Stabilizability Check
//----------------------------------------

n_acl=maxi(abs(Acl));
n_bcl=maxi(abs(Bcl));
[npp,npp]=size(Acl);
nss=st_ility(syslin('c',Acl,Bcl,C1),1.0e-10*maxi(n_acl,n_bcl));

if nss<npp then
   disp(npp,'npp')
   disp(nss,'nss')
   write(%io(2),'WARNING: (Acl,Bcl) is nearly unstabilizable');
end

if nss==npp then
   sstab='Yes... Good Luck!';
   else
   sstab='Sorry,... No!';
end

//----------------------------------------
//  Check main Riccati Equation
//----------------------------------------

QQ=[Q+Qhat Qhat;Qhat Qhat];
V=Bcl*Bcl';
```

```
S=C1'*C1;
ch4=Acl*QQ+QQ*Acl'+gamma0^(-2)*QQ*S*QQ+V;



//-------------------------------------
// THE NONNEGATIVITY oF QQ
//-------------------------------------

test9=min(real(spec(QQ)));

if DONE==0 then
   if test9 < 0  then
      write(%io(2),'QQ is not nonnegative definite !!!');
   end
end



//---------------------------------------
// Computation of ||T1||_inf & ||T2||_2
//---------------------------------------

T1=syslin('c',Acl,Bcl,C1,zeros(s1,r));
[normhinf,freq4]=h_norm(T1,1e-12);

T2=syslin('c',Acl,Bcl,C2,zeros(s2,r));
[normh2]=h2norm(T2,1e-12);

//---------------------------------------------
//  Computaion of optimal H2 norm of T2
//--------------------------------------------

[M_h2,N_h2,L1_h2,L2_h2,normh2_opt]=h2des(Gc,Gd,ncon,nmea,nfau);

//-----------------------------------------------
//  Computaion of nearly optimal Hinf norm of T1
//-----------------------------------------------

[M_hinf,N_hinf,L1_hinf,L2_hinf,normhinf_opt]=hinfdes(Gc,Gd,ncon,nmea,nfau);

if rshow==1 then

//--------------------------------
// Showing some important results
//--------------------------------
```

```
txt=['Riccati Check of Q';'Riccati Check of Q_hat  ';...
    'Riccati Check of QQ';'Stabilizability';...
'Gamma (a nearly optimal value)';'||T1(K1)||_inf (Mixed H2/H_inf)';...
'||T2(K1,K2)||_2 (Mixed H2/H_inf design)';...
'||T1(K1)||_inf (suboptimal H_inf/H_inf design)';...
'||T2(K1,k2)||_2 (Optimal H2/H2 design)';];
sigg=x_mdialog(['<< Results for Optimal Mixed H2/H_inf Controller/Detector...
    Design Using Bernstein-Haddad Approach>>'],...
txt,[string(norm(ch2));string(norm(ch1));...
string(norm(ch4));string(sstab);string(gam_opt);string(normhinf);...
string(normh2);string(normhinf_opt);string(normh2_opt)]);

end


endfunction
```

```
function [M,N,L1,L2,normh2]=h2des(Gc,Gd,ncon,nmea,nfau)


//  This function computes the integrated FDI and Controller module
//  using H2 approach.

//  The following system is considered:
//
//                                     y   =  Gc21(s) w  + Gc22(s) uc
//
//                                     Zc  =  Gc11(s) w  + Gc12(s) uc
//
//                                     Zd  =  Gd11(s) w  + Gd12(s) f^
//
//  where y,uc,fhat,y_d,Z_d,Z_c are the mesurement output,the control
//  input,the estimate of the fault, the disturbances(noises),the desired
//  output,the detection objective, the rgulated output and
//  the fault estimation, respectively. The transfer functions G1,
//  G2, G3, G4, Gf, Gn, Gs must be in in transfer form.
//

//
//                                     ----------------
//                       w=[f;d;y_d]   |                |      z=[Zc;Zd]
//                        ------------>|                |---------------->
//                                     |  Generalized   |
//                                     |    Plant       |      y=[y_p;y_d]
//                                     |                |--------
//                                uc   |     G(s)       |        |
//                              ------>|                |        |
//                            |        ----------------         |
//                            |                                 |
//                            |                                 |
//                            |        -- -------------         |
//                  f^        |       |                |        |
//                ------- ----|-------|      FDI and   |        |
//                            |       |    Controller  |        |
//                            |       |                |<-------
//                             -------|        K       |
//                                    |                |
//                                     ----------------

//  Also, This function computes H2-norm of the transfer fuction
//  Tzw in the above cases, where
//
```

```
//                                                                  -1
//                          Tzw(s) = G11(s)+G12(s)K(s)(I-G22(s)K(s)) G21(s)
//



//  The input and output arguments are

// Gc: Control Objective Function
// Gd: Detection Objective Function
// ncon: the number of the control inputs, n(uc)
// nmea: the number of the measurement, n(y)
// nfau: the number of the faults, n(f)
// gam_min, gam_max: minimum and maximum of gamma for gamma iteration
// gam_opt: The optimal value of gamma
// H2norm:   ||T2||_2
// Hinfnorm: ||T1||_inf

///                          dv/dt=Mv+Ny
///                          uc=L1v
///                          f_hat=L2v


getf('/home/khosrowjerdi/foo.sci')

///  Control Objectives Description

Ac=Gc(2);
Bc=Gc(3);
Cc=Gc(4);
Dc=Gc(5);

[rBc,cBc]=size(Bc);
[rCc,cCc]=size(Cc);
[rDc,cDc]=size(Dc);

Bc1=Bc(:,1:cBc-ncon);
Bc2=Bc(:,cBc-ncon+1:cBc);
Cc1=Cc(1:rCc-nmea ,:);
Dc12=Dc(1:rCc-nmea,cDc-ncon+1:cDc);
Cc2=Cc(rCc-nmea+1:rCc,:);
Dc21=Dc(rCc-nmea+1:rCc,1:cBc-ncon);

///  Fault Detection Objectives Description

Ad=Gd(2);
```

```
Bd=Gd(3);
Cd=Gd(4);
Dd=Gd(5);

[rBd,cBd]=size(Bd);
[rCd,cCd]=size(Cd);
[rDd,cDd]=size(Dd);

Bd1=Bd(:,1:cBd-nfau);
Bd2=Bd(:,cBd-nfau+1:cBd);
Cd1=Cd;
Dd12=Dd(:,cDd-nfau+1:cDd);

[np,np]=size(Ac);
[np,r]=size(Bc1);
[np,m]=size(Bc2);
[nd,nd]=size(Ad);
[nd,q]=size(Bd2);
[s1,np]=size(Cc1);
[s2,nd]=size(Cd1);
[p,np]=size(Cc2);
n=np+nd;

A=[Ac zeros(np,nd);zeros(nd,np) Ad];
B1=[Bc1;Bd1];
B2=[Bc2;zeros(nd,m)];
B3=[zeros(np,q);Bd2];
E1=[Cc1 zeros(s1,nd)];
E2=Dc12;
F1=[zeros(s2,np) Cd1];
F2=Dd12;
C=[Cc2 zeros(p,nd)];
D=Dc21;


/////////////// Test Assumptions

//if norm(E1'*E2) ~= 0
//   E1E2=E1'*E2;
//   disp(E1E2,'E1E2')
//   error(' Warning! There is cross term, E1E2 ~= 0 ')
//end

//if norm(F1'*F2) ~= 0
//   F1F2=F1'*F2;
//   disp(F1F2,'F1F2')
```

```
//   error(' Warning! There is cross term, F1F2 ~= 0 ')
//end

if det(E2'*E2) == 0
   error(' Warning!! singular problem, det(E2E2) = 0 ')
end

if det(F2'*F2) == 0
   error(' Warning!! singular problem, det(F2F2) = 0')
end

if det(D*D') == 0
   error(' Warning!! singular problem, det(DD) = 0 ')
end


//////////////////Case I\II: The H2 Simultaneous Design/////////////

// Computation of SS

BB1=[Bc1;Bd1];
BB2=[Bc2 zeros(np,q);zeros(nd,m) Bd2];
CC1=[E1;F1];
DD12=[E2 zeros(s1,q);zeros(s2,m) F2];
CC2=[Cc2 zeros(p,nd)];
DD21=Dc21;


AA=A-BB2*inv(DD12'*DD12)*(CC1'*DD12)';
BB=BB2*(DD12'*DD12)^(-1)*BB2';
CC=CC1'*CC1-(CC1'*DD12)*inv(DD12'*DD12)*(CC1'*DD12)';
PP=riccati(AA,BB,CC,'c','schur');

// Computation of PP

AA=(A-BB1*DD21'*(DD21*DD21')^(-1)*CC2)';
BB=CC2'*(DD21*DD21')^(-1)*CC2;
CC=BB1*BB1'-BB1*DD21'*(DD21*DD21')^(-1)*DD21*BB1';
SS=riccati(AA,BB,CC,'c','schur');

M=A-BB2*inv(DD12'*DD12)*(BB2'*PP+(CC1'*DD12)')-...
(SS*CC2'+BB1*DD21')*(DD21*DD21')^(-1)*CC2;
N=(SS*CC2'+BB1*DD21')*(DD21*DD21')^(-1);
L=-inv(DD12'*DD12)*(BB2'*PP+(CC1'*DD12)');

L1=L(1:m,:);
```

```
L2=L(m+1:m+q,:);

K_H2=syslin('c',M,N,L,zeros(m+q,p));

Acl=[A B2*L1+B3*L2;N*C M];
Bcl=[B1;N*D];
C1=[E1 E2*L1];
C2=[F1 F2*L2];


////////////////////////////////////// T1(K1)=(Acl,Bcl,C1,D1) ////

T1=syslin('c',Acl,Bcl,C1,zeros(s1,r));
//[norm31]=h_norm(T1);                 /// ||T1||_inf
//[norm32]=h2norm(T1,1e-9);            /// ||T1||_2

//////////////////////////////////// T2(K1,K2)=(Acl,Bcl,C2,D2) ////

T2=syslin('c',Acl,Bcl,C2,zeros(s2,r));
//[norm33]=h_norm(T2);                /// ||T2||_inf
[normh2]=h2norm(T2,1e-9);          /// ||T2||_2

endfunction
```

```
function [M,N,L1,L2,normhinf]=hinfdes(Gc,Gd,ncon,nmea,nfau)

//  This function computes the integrated FDI and Controller module
// using H_infinity approach

//  The following system is considered:
//
//                                     y   =  Gc21(s) w  + Gc22(s) uc
//
//                                     Zc  =  Gc11(s) w  + Gc12(s) uc
//
//                                     Zd  =  Gd11(s) w  + Gd12(s) f^
//
//  where y,uc,fhat,y_d,Z_d,Z_c are the mesurement output,the control
//  input,the estimate of the fault, the disturbances(noises),the desired
//  output,the detection objective, the rgulated output and
//  the fault estimation, respectively. The transfer functions G1,
//  G2, G3, G4, Gf, Gn, Gs must be in in transfer form.
//


//                                     ----------------
//                       w=[f;d;y_d]   |                |      z=[Zc;Zd]
//                        ------------>|                |---------------->
//                                     |  Generalized   |
//                                     |    Plant       |      y=[y_p;y_d]
//                                     |                |--------
//                                uc   |     G(s)       |        |
//                              ------>|                |        |
//                            |        ----------------         |
//                            |                                 |
//                            |                                 |
//                            |        -- -------------         |
//                   f^       |       |                |        |
//                 ------- ----|-------|      FDI and   |        |
//                            |       |    Controller  |        |
//                            |       |                |<-------
//                             -------|        K       |
//                                    |                |
//                                     ----------------

//  Also, This function computes H2-norm of the transfer fuction
//  Tzw in the above cases, where
//
//                                                                -1
```

```
//                          Tzw(s) = G11(s)+G12(s)K(s)(I-G22(s)K(s)) G21(s)
//



//  The input and output arguments are

// Gc: Control Objective Function
// Gd: Detection Objective Function
// ncon: the number of the control inputs, n(uc)
// nmea: the number of the measurement, n(y)
// nfau: the number of the faults, n(f)
// gam_min, gam_max: minimum and maximum of gamma for gamma iteration
// gam_opt: The optimal value of gamma
// H2norm:   ||T2||_2
// Hinfnorm: ||T1||_inf

///                         dv/dt=Mv+Ny
///                         uc=L1v
///                         f_hat=L2v



//-----------------------------------
//  Control Objectives Description
//-----------------------------------

Ac=Gc(2);
Bc=Gc(3);
Cc=Gc(4);
Dc=Gc(5);

[rBc,cBc]=size(Bc);
[rCc,cCc]=size(Cc);
[rDc,cDc]=size(Dc);

Bc1=Bc(:,1:cBc-ncon);
Bc2=Bc(:,cBc-ncon+1:cBc);
Cc1=Cc(1:rCc-nmea ,:);
Dc12=Dc(1:rCc-nmea,cDc-ncon+1:cDc);
Cc2=Cc(rCc-nmea+1:rCc,:);
Dc21=Dc(rCc-nmea+1:rCc,1:cBc-ncon);

//-----------------------------------------
//  Fault Detection Objectives Description
//-----------------------------------------
```

```
Ad=Gd(2);
Bd=Gd(3);
Cd=Gd(4);
Dd=Gd(5);

[rBd,cBd]=size(Bd);
[rCd,cCd]=size(Cd);
[rDd,cDd]=size(Dd);

Bd1=Bd(:,1:cBd-nfau);
Bd2=Bd(:,cBd-nfau+1:cBd);
Cd1=Cd;
Dd12=Dd(:,cDd-nfau+1:cDd);

[np,np]=size(Ac);
[np,r]=size(Bc1);
[np,m]=size(Bc2);
[nd,nd]=size(Ad);
[nd,q]=size(Bd2);
[s1,np]=size(Cc1);
[s2,nd]=size(Cd1);
[p,np]=size(Cc2);
n=np+nd;

A=[Ac zeros(np,nd);zeros(nd,np) Ad];
B1=[Bc1;Bd1];
B2=[Bc2;zeros(nd,m)];
B3=[zeros(np,q);Bd2];
E1=[Cc1 zeros(s1,nd)];
E2=Dc12;
F1=[zeros(s2,np) Cd1];
F2=Dd12;
C=[Cc2 zeros(p,nd)];
D=Dc21;

//-----------------
// CHECK HYPOTHESES
//-----------------

if q > p then
  write(%io(2),'WARNING: there are too many faults.');
end

if m > s1 then
  write(%io(2),'WARNING: the dimensions of Dc12 are inadequate');
```

```
end

if q > s2 then
  write(%io(2),'WARNING: the dimensions of Dd12 are inadequate');
end

if p > r then
  write(%io(2),'WARNING: the dimensions of Dc21 are inadequate');
end

[u12,s12,v12]=svd(Dc12);
s12=s12(1:m,:);
[ud12,sd12,vd12]=svd(Dd12);
sd12=sd12(1:q,:);
ud12=ud12(:,1:q);        //Dd12 = ud12 sd12 vd12' with sd12 square diagonal
[u21,s21,v21]=svd(Dc21);
s21=s21(:,1:p);
u12=u12(:,1:m);           //Dc12 = u12 s12 v12' with s12 square diagonal
v21=v21(:,1:p);           //Dd21 = u21 s21 v21'

//---------------------------------------
//rank condition on Dc12, Dd12 and Dc21
//---------------------------------------

if s12(m,m)/s12(1,1) <= 100*%eps then
  write(%io(2),'WARNING: Dc12 is not full rank at the machine precision');
end

if sd12(q,q)/s12(1,1) <= 100*%eps then
  write(%io(2),'WARNING: Dd12 is not full rank at the machine precision');
end

if s21(p,p)/s21(1,1) <= 100*%eps then
  write(%io(2),'WARNING: Dc21 is not full rank at the machine precision');
end

//----------------------------------------
//(Ac,Bc2,Cc2) stabilizable + detectable
//----------------------------------------

noa=maxi(abs(Ac));  nob2=maxi(abs(Bc2)); noc2=maxi(abs(Cc2));

ns=st_ility(syslin('c',Ac,Bc2,Cc2),1.0e-10*maxi(noa,nob2));
if ns<np then
  write(%io(2),'WARNING: (A,Bc2) is nearly unstabilizable');
end
```

```
ndd=dt_ility(syslin('c',Ac,Bc2,Cc2),1.0e-10*maxi(noa,noc2));
if 0<ndd & ndd<np then
  write(%io(2),'WARNING: (Cc2,Ac) is nearly undetectable');
end

if max(real(spec(Ad))) > 0
   error('Ad is not Hurwitz!!!')
end

if det(E2'*E2) == 0
   error(' Warning!! singular problem, det(E2E2) = 0 ')
end

if det(F2'*F2) == 0
   error(' Warning!! singular problem, det(F2F2) = 0')
end

if det(D*D') == 0
   error(' Warning!! singular problem, det(DD) = 0 ')
end


//---------------------------
//   The H_infinity Design
//---------------------------

AA=A;
BB1=[Bc1;Bd1];
BB2=[Bc2 zeros(np,q);zeros(nd,m) Bd2];
CC1=[E1;F1];
DD12=[E2 zeros(s1,q);zeros(s2,m) F2];
CC2=[Cc2 zeros(p,nd)];
DD21=Dc21;

G=syslin('c',A,[BB1 BB2],[CC1;CC2],[zeros(s1+s2,r) DD12;DD21 zeros(p,m+q)]);

gopt1=gamitg(G,[p m+q],1e-8);
gamma0=1.01*gopt1;

//----------------------
//   Computation of matrices Q & Y
//-----------------------

AA=(A-BB1*DD21'*inv(DD21*DD21')*CC2)';
BB=-(gamma0^(-2)*CC1'*CC1-CC2'*inv(DD21*DD21')*CC2);
```

```
CC=BB1*BB1'-BB1*DD21'*inv(DD21*DD21')*DD21*BB1';
Q=riccati(AA,BB,CC,'c','eigen');

AA=A-BB2*inv(DD12'*DD12)*(CC1'*DD12)';
BB=-(gamma0^(-2)*BB1*BB1'-BB2*inv(DD12'*DD12)*BB2');
CC=CC1'*CC1-(CC1'*DD12)*inv(DD12'*DD12)*(CC1'*DD12)';
Y=riccati(AA,BB,CC,'c','eigen');

[ny,ny]=size(Y);

M=A-BB2*inv(DD12'*DD12)*(BB2'*Y+(CC1'*DD12)')*inv(eye(ny,ny)-gamma0^(-2)*Q*Y)-...
(Q*CC2'+BB1*DD21')*inv(DD21*DD21')*CC2+gamma0^(-2)*Q*CC1'*CC1-...
gamma0^(-2)*Q*(CC1'*DD12)*inv(DD12'*DD12)*(BB2'*Y+(CC1'*DD12)')*inv(eye(ny,ny)-...
gamma0^(-2)*Q*Y);
N=(Q*CC2'+BB1*DD21')*inv(DD21*DD21');
L=-inv(DD12'*DD12)*(BB2'*Y+(CC1'*DD12)')*inv(eye(ny,ny)-gamma0^(-2)*Q*Y);

L1=L(1:m,:);
L2=L(m+1:m+q,:);

//--------------------
// Closed Loop System
//--------------------

Acl=[A B2*L1+B3*L2;N*C M];
Bcl=[B1;N*D];
C1=[E1 E2*L1];
C2=[F1 F2*L2];

test=max(real(spec(Acl)));

if test >= 0
  disp(gamma0, 'the gamma')
  disp(' ')
  disp(' ')
  error(' << Closed-loop system is unstable, gamma is too small !!!! >>')
end

//----------------------
// Computation of ||T1||
//----------------------

[normhinf,freq1]=h_norm(T1,1e-12);         /// ||T1||_inf

endfunction
```

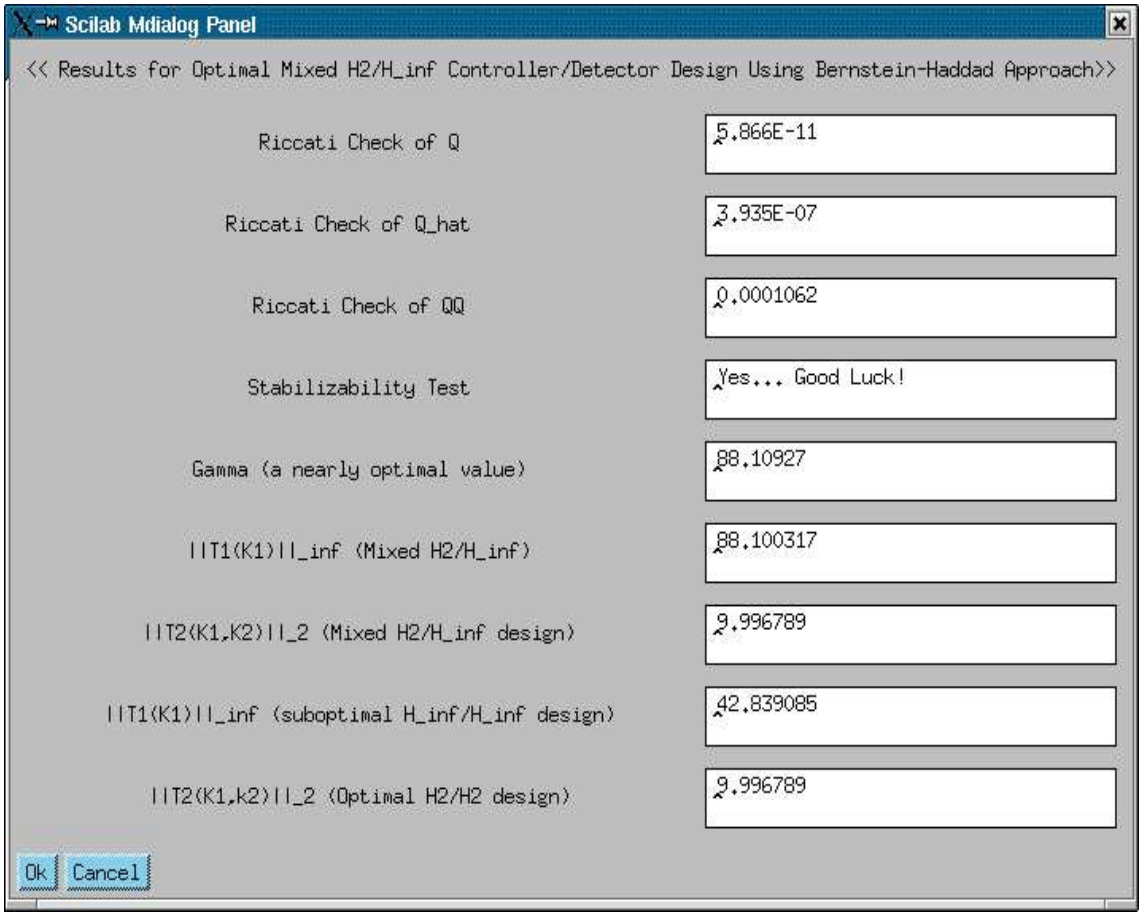

Figure 8.4: **Results for mixed $\mathcal{H}_2/\mathcal{H}_\infty$ controller/detector**

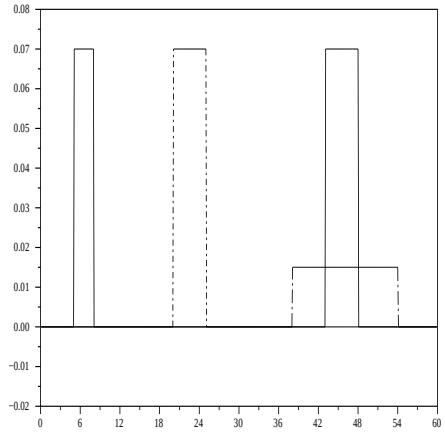

Figure 8.5: $f_1(t)$ (solid), $f_2(t)$ (dashed) and $d(t)$ (dash-dot) vs. t

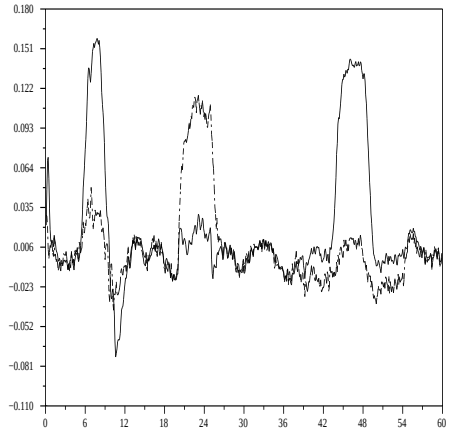

Figure 8.6: $\hat{f}_1(t)$ (solid) and $\hat{f}_2(t)$ (dashed) vs. t

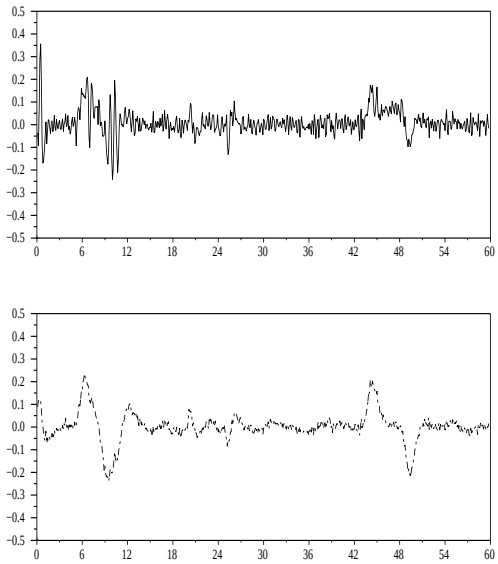

Figure 8.7: $y_1(t)$ (solid) and $y_2(t)$ (dashed) vs. t

Unité de recherche INRIA Rocquencourt
Domaine de Voluceau - Rocquencourt - BP 105 - 78153 Le Chesnay Cedex (France)

Unité de recherche INRIA Lorraine : LORIA, Technopôle de Nancy-Brabois - Campus scientifi que
615, rue du Jardin Botanique - BP 101 - 54602 Villers-lès-Nancy Cedex (France)
Unité de recherche INRIA Rennes : IRISA, Campus universitaire de Beaulieu - 35042 Rennes Cedex (France)
Unité de recherche INRIA Rhône-Alpes : 655, avenue de l'Europe - 38330 Montbonnot-St-Martin (France)
Unité de recherche INRIA Sophia Antipolis : 2004, route des Lucioles - BP 93 - 06902 Sophia Antipolis Cedex (France)

Éditeur
INRIA - Domaine de Voluceau - Rocquencourt, BP 105 - 78153 Le Chesnay Cedex (France)
http://www.inria.fr
ISSN 0249-0803