HAL
open science

Multivariate spline bases, oriented matroids and zonotopal tilings

Hélène Barucq, Henri Calandra, Julien Diaz, Stefano Frambati

To cite this version:

Hélène Barucq, Henri Calandra, Julien Diaz, Stefano Frambati. Multivariate spline bases, oriented matroids and zonotopal tilings. [Research Report] RR-9350, Inria; Total E&P. 2020. hal-02865801v2

HAL Id: hal-02865801

https://inria.hal.science/hal-02865801v2

Submitted on 19 Jun 2020 (v2), last revised 4 Mar 2021 (v3)

HAL is a multi-disciplinary open access archive for the deposit and dissemination of scientific research documents, whether they are published or not. The documents may come from teaching and research institutions in France or abroad, or from public or private research centers.

L'archive ouverte pluridisciplinaire **HAL**, est destinée au dépôt et à la diffusion de documents scientifiques de niveau recherche, publiés ou non, émanant des établissements d'enseignement et de recherche français ou étrangers, des laboratoires publics ou privés.

Multivariate spline bases, oriented matroids and zonotopal tilings

Hélène Barucq, Henri Calandra, Julien Diaz, Stefano Frambati

RESEARCH REPORT

N° 9350

June 2020

Project-Team Magique 3D

ISSN 0249-6399 ISRN INRIA/RR--9350--FR+ENG

Multivariate spline bases, oriented matroids and zonotopal tilings

Hélène Barucq*, Henri Calandra†, Julien Diaz*,
Stefano Frambati† *‡

Project-Team Magique 3D

Research Report n° 9350 — June 2020 — 57 pages

Abstract: In the first part of this work, we uncover a connection between polynomial-reproducing bases of simplex splines and certain single-element liftings of oriented matroids associated to point configurations. We use this correspondence to construct a broad family of spline bases on generic point multisets, generalizing a known result on Delaunay configurations. Our spline bases are naturally defined on finite knot sets with affine dependencies and higher multiplicities, without need for special treatment of degenerate cases. We reformulate our bases in the language of zonotopal tilings, via the Bohne-Dress theorem, obtaining a link to a known construction algorithm for bivariate spline bases based on centroid triangulations. In the second part of this work, we restrict again our attention to weighted Delaunay configurations and the associated spline bases, and we capitalize on our combinatorial viewpoint to extend, in this special case, the well-known bivariate construction algorithm to higher dimensions and generic point multisets. Finally, we employ this machinery to propose algorithms for the determination and evaluation of all multivariate basis spline functions supported on a given point.

Key-words: multivariate spline, simplex spline, spline basis, oriented matroid, zonotopal tiling

* Inria Bordeaux Sud-Ouest, Project-Team Magique-3D, Inria - E2S UPPA-CNRS, Pau, France
† Total SA, Centre Scientifique et Technique Jean Féger, Pau, France
‡ Corresponding author

RESEARCH CENTRE BORDEAUX – SUD-OUEST

200 avenue de la Vieille Tour
33405 Talence Cedex

Bases de splines multivariées, matroïdes orientés et pavages de zonotopes

Résumé : Dans la première partie de ce travail, on explore une connexion entre les bases de splines simplexes (multivariées) capables de reproduire les polynômes et certains relèvements du matroïde orienté associé à une configuration de points. On se sert de cette corréspondence afin de construire une large famille de bases de splines multivariées sur des multi-ensembles de points quelconques, généralisant ainsi un résultat connu sur les configurations de Delaunay. Les bases ainsi construites sont naturellement définies sur desensembles de noeuds contenant des dépendences affines et des multiplicitées élevées, sans qu'il y ait besoin d'un traitement spécifique des cas dégénerés. On reformule nos bases dans le langage des pavages de zonotopes grâce au théorème de Bohne-Dress. Cette réinterprétation nous permet de tirer un lien vers un algorithme connu de construction de bases de splines bivariées basé sur les triangulations centroïdales. Dans la seconde partie de ce travail, on focalise à nouveau notre attention sur les configurations de Dalaunay pondérées. On exploite notre point de vue combinatoriel afin d'étendre, dans ce cas spécial, l'algorithme connu de génération de bases de splines bivariées à des dimensions supérieures à deux et à des multisets de points quelconques. Enfin, on exploite ces mécanisme afin de dériver un algorithme capable de trouver et évaluer toutes les splines d'une base supportées sur un point donné.

Mots-clés : spline multivariée, spline simplexe, base de splines, matroïde orienté, pavage de zonotope

Contents

1 Introduction **4**

2 Background **5**
2.1 Notation and conventions 5
2.2 Multivariate splines 6
2.3 Vector configurations and oriented matroids 9
2.4 Single-element liftings and zonotopal tilings 11

3 Main contributions **13**

4 Simplex spline bases **15**
4.1 Proof of polynomial reproduction 18
4.2 Basis construction 23

5 Weighted Delaunay bases **30**
5.1 Construction 32
5.2 Splines supported on x 33
5.3 Evaluation graph 41

6 Conclusions **48**

A Supplementary proofs **52**

Abbreviations and symbols

$\mathrm{aff}(\cdot)$	Affine span of a set of points.
$\mathrm{conv}(\cdot)$	Convex hull of a set of points.
$:=$, $=:$	Symbol on the left (right) defined by expression on the right (resp. left).
$\det(A)$	Determinant of the $(d+1)\times(d+1)$ matrix $(a,1)_{a\in A}$, ordered so that $\det(A)>0$.
$\det({}^{b}_{a}A)$	Determinant of the points $A\backslash\{a\}\sqcup\{b\}$ ordered so that $\det(A)>0$, and with the row a replaced by b.
$\mathbf{1}_A(\cdot)$	Indicator function of the set A, i.e., $\mathbf{1}_A(x)=1$ if $x\in A$, 0 otherwise.
$\left(\!\binom{n}{p}\!\right)$	Number of multisets of size p on n symbols (multichoose), equal to $\binom{n+p-1}{p}$.
$\lvert\cdot\rvert$	Cardinality of a (multi)set.
$\mathrm{rank}(\cdot)$	Rank of a matrix.
$\langle\cdot,\cdot\rangle$	Scalar product between vectors.
$\mathrm{sign}(\cdot)$	Sign function: ±1 if argument positive/negative, zero otherwise.
X_v	Sign taken by X on the vector v.
$X_{u,\sigma}$	Sign vector obtained from X by setting the value on u to $\sigma\in\{-,0,+\}$.
X^σ	Set of vectors over which the sign covector X is equal to $\sigma\in\{-,0,+\}$.
$X\circ Y$	Composition of two sign covectors X and Y: $(X\circ Y)_v := X_v$ if $X_v\neq 0$, Y_v otherwise.
$S(X,Y)$	Separation set of X and Y, i.e., set of vectors over which X and Y are nonzero and opposite.
$\mathrm{supp}(\cdot)$	Support of a function.
$M(\cdot\mid A)$	Spline function defined by the multiset of points A.
$A\sqcup B$	Disjoint union of two multisets.
$\mathrm{vol}(\cdot)$	Volume of a region.

1 Introduction

Since their inception around sixty years ago, curves and surfaces based on Bézier, B-spline and NURBS (Non-Uniform Rational B-Splines) bases [1, 2] have been invaluable tools in computer-aided design, computer graphics, machining and fabrication. More recently, spline bases have entered the realm of partial differential equations via the new field of *isogeometric analysis* [3, 4]. Under this new analytical paradigm, B-spline and NURBS basis functions replace the more traditional polynomial bases used in finite element analysis (FEA) simulations. Their application to real-world problems crucially requires robust and efficient algorithms to construct multivariate spline bases and efficiently determine and evaluate the functions supported on a given point.

In the one-dimensional case, the classic Cox-De Boor recurrence formula [5, 6], which expresses a B-spline function $N_{i,p}(x)$ of degree p through two consecutive functions $N_{i,p-1}(x)$, $N_{i+1,p-1}(x)$ of order $p-1$, is overwhelmingly used as the definition of polynomial-reproducing B-spline bases. From this formula, robust and efficient evaluation schemes that optimally avoid useless calculations and reuse intermediate results have been derived, such as the classic pyramidal evaluation scheme presented in [7, Chapter X, Algorithm 8]. These algorithms underpin virtually all practical applications of B-splines.

The simplest approach to formulating multivariate splines on two and three dimensional domains, used in almost all CAD (Computer Aided Design) software and models, is through the use of tensor products. This corresponds to defining, starting from a collection of d univariate B-spline bases indexed by $i_1, \dots, i_d$ and with orders $p_1, \dots, p_d$, the multivariate B-spline basis functions $N : \mathbb{R}^d \to \mathbb{R}$ as $N_{i_1,\dots,i_d,p_1,\dots,p_d}(x_1, \dots, x_d) := N_{i_1,p_1}(x_1) \cdots N_{i_d,p_d}(x_d)$. The d-dimensional knots defining these splines can be thought of as forming a regular d-dimensional grid. The usefulness of this definition goes well beyond its widespread use, since many calculations involving tensor product splines simplify considerably when these basis functions are used, mainly because of the separability of superposition integrals.

The tensor product structure of standard multivariate B-spline basis functions can however be too rigid in some specific applications, as for example the simulation of PDEs in the natural sciences, where the physical parameters of a domain can have complex geometrical interfaces of reduced regularity or discontinuity, with arbitrary topology, and no CAD model is available. For this reason, simulation methods based on unstructured grids, for example through finite elements or discontinuous Galerkin, are often preferred in these fields.

Recently, some effort has gone into bridging the gap between fully unstructured discontinuous Galerkin simulations and the usual tensor-product Isogeometric Analysis, by linking multiple spline patches through discontinuous Galerkin fluxes, see e.g. [8]. These approaches have been successful in unlocking some of the numerical advantages of Isogemetric Analysis in an unstructured setting. However, the need for a CAD model, the restriction on the topology of discontinuities and the unsuitability for inverse problems remain drawbacks of the current approaches. In this work, we strive to provide a more natural blending of the two worlds by focusing on unstructured (also called *multivariate*) spline functions.

Much work has gone into the definition of multivariate spline functions and associated bases, i.e., collections of spline functions capable of reproducing polynomials on a given domain. These efforts have produced natural and numerically efficient multivariate generalizations of B-splines, as well as construction algorithms for function bases. However, when formulating a complete isogeometric analysis formalism, we find that the current state-of-the-art algorithms and approaches

for unstructured splines are still lacking compared with their tensor-product counterparts. The main construction algorithm [9, 10] is only proven to work in two dimensions, and has only recently [11] been proved to converge for all orders p. Moreover, the current formulations fall short of treating the case of repeated knots, which is needed to impose boundary conditions and to locally control the regularity of the solution. Finally, no simple and general evaluation scheme is known for multivariate B-splines, and the associated spline space has not been investigated in sufficient detail to formulate efficient numerical quadratures.

In this work, we set out to improve on some of these shortcomings by showing how these bases can be recast in a more general setting, allowing for repeated knots and in arbitrary dimension, paving the way for their use in efficient numerical schemes for the numerical resolution of PDEs in an unstructured setting. We base our formulation on a connection between simplex spline bases, oriented matroids and zonotopal tilings, whose combinatorial nature allows a unified treatment free of the degenerate configurations that are typical of a purely geometrical approach. Furthermore, these structures come equipped with a natural graph, the cocircuit graph, which can be used to navigate between splines in a basis and extend some aspects of the classical De Boor evaluation scheme. This removes, in our view, one important computational shortcoming that has prevented a more widespread use of these basis functions.

Finally, note that some connections between these topics have already been drawn in the past (see e.g. [12]), but, to the best of our knowledge, they have never been applied to the construction of polynomial-reproducing bases of simplex splines.

2 Background

We provide in this section an introduction to the main actors of this work: multivariate splines and their associated bases, oriented matroids and zonotopal tilings. Our goal in the following sections is to show how these combinatorial objects and their relations can provide a combinatorial grounding for spline bases, independent of the space dimension and allowing for the use of more general sets of points.

2.1 Notation and conventions

In order to handle the case of coincident points, we will adopt throughout the *multiset* notation, i.e., the use of sets allowing for repeated elements. Given two such multisets A and B, we denote by $|A|$ the cardinality of A, i.e., the number of elements counted with their multiplicity, and by $A \sqcup B$ their *sum* or *disjoint union*, i.e., the union of the two multisets in which all elements are considered as distinct. For example, if $A = \{a_1, a_2, a_2\}$ and $B = \{a_1, a_3\}$, then $A \sqcup B = \{a_1, a_1, a_2, a_2, a_3\}$. Thus, $|A \sqcup B| = |A| + |B|$. The same notation is trivially valid for the disjoint union of normal sets, yielding a multiset. Repetitions are also taken into account when computing set differences, intersections and subsets, e.g., $A \backslash \{a_2\} = \{a_1, a_2\}$, $A \cap \{a_2, a_2, a_3\} = \{a_2, a_2\}$ and $A \subset \{a_1, a_2, a_2, a_3\}$ but $A \not\subset \{a_1, a_2, a_3\}$.

Given a set of $d+1$ affinely independent points $X = \{a_1, \dots, a_{d+1}\} \subset \mathbb{R}^d$, let $\det(X)$ be a shorthand for the $(d+1) \times (d+1)$ determinant $\det((a, 1)_{a \in X})$, with the ordering of the elements in X always chosen so that $\det(X) > 0$. When considering the determinants $\det(X \backslash \{a\} \sqcup \{b\})$, we wish to preserve the same element ordering, by replacing the (unique)

instance of a in X by b in the same position. For this reason, we borrow a convenient notation from [13], and denote by $\det({}^{b}_{a}X)$ the determinant of the set $X\backslash\{a\} \sqcup \{b\}$ with the ordering taken so that $\det(X) > 0$, and with the row corresponding to a replaced by that corresponding to b. Notice that $\det({}^{b}_{a}X)$ can in principle have both signs. As an example, $\det({}^{x}_{a_2}X)/\det(X) = \det(\{a_1, x, a_3, \ldots, a_{d+1}\})/\det(\{a_1, a_2, \ldots, a_{d+1}\})$, and $\det({}^{a_j}_{a_i}X)/\det(X) = \delta_{ij}$. The ratio $\lambda_a(b) := \det({}^{b}_{a}X)/\det(X)$ is equal to the barycentric coordinate of the point b with respect to the point a in the simplex $\mathrm{conv}(X)$.

Let X be a finite set of points in $\mathbb{R}^d$ and let $\mathcal{R}(X) \subset \mathbb{R}^d$ be a d-dimensional region obtained as the union of d-dimensional convex hulls of subsets of X. A *triangulation* $\mathcal{T}$ of $\mathcal{R}(X)$ is a collection of d-dimensional simplices with vertices in A such that $\bigcup_{t\in\mathcal{T}} t = \mathcal{R}(X)$ and the intersection between any two simplices in $\mathcal{T}$ is a (possibly empty) face of both. In two dimensions any such region admits a triangulation, but already in three dimensions there exist (non-convex) polyhedra that cannot be triangulated, such as Schönhardt's polyhedron [14].

Finally, given two subsets $P, Q \subset \mathbb{R}^d$, we define their *Minkowski sum* as the set $P + Q := \{x + y \in \mathbb{R}^d : x \in P, y \in Q\}$.

2.2 Multivariate splines

Given an ordered multiset of real numbers $A := (a_1, \ldots, a_n) \in \mathbb{R}$, $a_1 \leqslant \ldots \leqslant a_n$, and denoting the multiset $A_{i,j} := \{a_i, \ldots, a_j\}$ for $j \geqslant i$, univariate B-spline functions of order p over the knots A are defined recursively for every $x \in \mathbb{R}$, $a_1 \leqslant x \leqslant a_n$ using the so-called *Cox-De Boor* recurrence formula

$$N(x \mid A_{i,i+1}) := \mathbf{1}_{a_i,a_{i+1}}(x), \tag{2.1a}$$

$$N(x \mid A_{i,i+p+1}) := \frac{x - a_i}{a_{i+p} - a_i} N(x \mid A_{i,i+p}) + \frac{a_{i+p+1} - x}{a_{i+p+1} - a_{i+1}} N(x \mid A_{i+1,i+p+1}), \tag{2.1b}$$

where $\mathbf{1}_{a,b}(x)$ represents the indicator function of the half-open interval $[a, b)$.

Each function N is a piecewise polynomial function on (a_1, a_n) with regularity C^{p-1} at each value a_i, called *knot*. The regularity is reduced by k if a knot is repeated $k + 1$ times, in which case the terms with zero denominators in (2.1b) need to be set equal to 0. B-splines of order p reproduce polynomials up to order p, but in order for this property to be valid in the whole domain $[a_1, a_n]$, the first and last knots need to be repeated $p + 1$ times.

Unstructured spline functions were introduced by Curry and Schoenberg [15] as projection of simplices and later generalized by Carlson [16] through Dirichlet averages. The following useful recurrence formula was first derived by Micchelli [17]. Given a multiset X of $p + d + 1$ points in $\mathbb{R}^d$, possibly with repetitions, the normalized multivariate spline function $M(x \mid X)$ can be defined for $x \in \mathbb{R}^d$ via the expression

$$M(x \mid X) := \begin{cases} \dfrac{d!}{\det(X)} \mathbf{1}_X(x) & \text{if } p = 0, \qquad (2.2a) \\ \dfrac{p+d}{p} \displaystyle\sum_{a\in Y} \dfrac{\det({}^{x}_{a}Y)}{\det(Y)} M(x \mid X\backslash\{a\}) & \text{otherwise}, \qquad (2.2b) \end{cases}$$

where $\mathbf{1}_X(x) := \mathbf{1}_{\mathrm{conv}(X)}(x)$ and Y is any affinely independent subset $Y \subseteq X$ with $|Y| = d + 1$. If no such Y exists, then the affine rank of X is less than $d + 1$ and the spline is supported

on a zero-measure set, and can be set to zero everywhere by continuity. The functions M are multivariate piecewise polynomial functions with regularity C^{p-1} if all the points are affinely independent, and reduced regularity otherwise. Another useful expression, also derived in [17], is the *knot insertion* formula. If $|X| \geqslant d+2$ (i.e., if $p \geqslant 1$), we can select another point $\tilde{a} \in X \backslash Y$. We then have

$$\det(Y) M(x \mid X \backslash \{\tilde{a}\}) = \sum_{a \in Y} \det({}^{\tilde{a}}_{a} Y) M(x \mid X \backslash \{a\}). \tag{2.3}$$

Just like (2.2b) relates splines of order p and $p-1$, allowing for a recurrent evaluation scheme, (2.3) relates splines with the same order $p-1$.

2.2.1 Multivariate spline bases

The construction of suitable bases for multivariate splines, i.e., families of spline functions capable of reproducing polynomials, has proved trickier than the one-dimensional case. Early successful attempts based on the triangulation of higher-dimensional polyhedra [18, 19] or simploids [20], were deemed computationally impractical or did not reduce to the usual B-spline basis for $d = 1$, while a construction based on the introduction of auxiliary nodes on an existing triangulation (*DMS splines*, see [21]) was seen to be dependent on arbitrary choices that artificially reduce the symmetry of the result. We refer the reader to [22] for a review on the subject.

A more recent approach uses a point set A, without any additional structure, as an input to build multivariate splines. Neamtu [13, 23], showed that, if all the *Delaunay configurations* of order p of A are chosen as subset of knots, the resulting splines form a basis capable of reproducing all polynomials up to order p. Delaunay configurations are a generalization of Delaunay triangulations, and correspond to all subsets $X_B \subseteq A$ of $(d+1)$ points whose circumsphere contains exactly a set $X_I \subset A$ of p points in its interior. The corresponding spline is then defined using (2.2) as $M(\cdot \mid X_B \sqcup X_I)$. This approach is discussed in more detail in Section 4.

Subsequently, Liu and Snoeyink [9, 10] have proposed an algorithm to iteratively compute a large family of generalized Delaunay configurations of A with any order p, each yielding a spline basis. Their algorithm is based on the concept of the order-k *centroid triangulation* [10, 24–26], which is a triangulation of the point set $A^{(k)}$ obtained by taking averages of k-element subsets of A. The order-1 centroid triangulation is simply an (arbitrary) triangulation of A, and an order-k centroid triangulation is obtained from an order-$(k-1)$ centroid triangulation by a subdivision of the polygonal neighborhood of every vertex, with complete freedom in the choice of triangulation for each polygon. The authors were able to prove that the algorithm produces multivariate spline bases of order p for $p \leqslant 3$.

Finally, Schmitt [11] recently proved that Liu and Snoeyink's algorithm can be seen as a generalization of Neamtu's construction with arbitrary families of convex Jordan curves replacing circles, and proved that the algorithm is correct for any order p, while providing some insight as to how it should be extended to higher dimensions. However, one major hurdle for the extension to dimensions $d > 2$ lies in the generalization to hypersurfaces other than hyperspheres of the crucial *edge matching property*, i.e. the way in which p-configurations can be related to $(p-1)$-configurations through facets. We state this property precisely in Section 4.1. Furthermore, the proposed construction algorithms make no provisions for repeated knots or knot sets containing affine dependencies, and as a result the polynomial reproduction property cannot be guaranteed on the whole domain $\operatorname{conv}(A)$, with little control over the regularity of the basis. Numerical

perturbations may be used in the two-dimensional case to obviate this problem [27], but they complicate proofs and constructions needlessly, especially so in higher dimensions. For this reason, we wish to provide in this work a firmer combinatorial grounding to spline bases.

2.2.2 Evaluation scheme

Suppose that we are given a set $\mathcal{B}_p$ of subsets $X \subset A$ such that the collection of splines $M(\cdot \mid X)_{X\in\mathcal{B}_p}$ reproduces all the polynomials of order p. In practical applications, such as function approximation or numerical quadratures, one often has to evaluate expressions of the form

$$\sum_{X\in\mathcal{B}_p} \alpha_X M(x \mid X) \tag{2.4}$$

for an arbitrary set of coefficients $\alpha_X \in \mathbb{R}^{|\mathcal{B}_p|}$ and a given point $x \in \mathbb{R}^d$. The naive evaluation of all splines in (2.4) via (2.2b) bears a high computational cost, proportional to $|\mathcal{B}_p|(d+1)^p$. For the case $d = 1$, efficient and stable numerical evaluation methods have been available for quite some time. Perhaps the one that has enjoyed the most widespread use is the classic pyramidal evaluation scheme presented in [7, Chapter X, Algorithm 8], also known as the Fortran routine `BSPLVP`, which relies on the property of one-dimensional B-spline bases that every spline of order p can be computed knowing the value of all splines of order $p-1$ through a single application of (2.1b). Moreover, the evaluation graph is independent of the position of the test point x and has a very simple structure.

A problem arises however if we try to implement a similar optimized evaluation scheme in dimension $d > 1$. In fact, starting from a spline $M(x \mid X)$ of order p, the recurrence formula (2.2b) requires the calculation of a combination of splines based exactly on the subsets $X\backslash\{a\}$ for all a in a suitable subset $Y \in X$, $\det(Y) \neq 0$. The use of (generalized) Delaunay configurations provides such a subset Y for the first application of (2.2b), namely, the set X_B of boundary points that define the circumscribing (pseudo)sphere. In general, however, some of the sets $X\backslash\{a\}$ do not correspond to configurations of order $p-1$, i.e., not all spline functions appearing on the right hand side of (2.2b) are found in the basis. In other words, the knowledge of all the basis spline functions of an order $p-1$ is not sufficient to compute the value of the basis splines of order p at a given point x using (2.2b).

This problem has plagued the efficient evaluation of simplex splines since their inception, and it was diagnosed quite early [28]. One is left with no choice but to introduce some additional auxiliary spline functions, completing the evaluation graph. However, the number of ways in which this can be accomplished grows with the order p of the basis, since each auxiliary configuration X' of order p can in turn require the introduction of some additional functions of order $p-1$ for its evaluation. In the absence of any natural guidance, some approaches try to find, for each spline configuration X, a suitable subset $Y \subset X$ (*split set*) on which to apply (2.2b) in order to minimize the total amount of auxiliary functions that are added. However, such rules have only been found for special configurations such as DMS (i.e., triangulation-basesd) splines [43], and they become harder to define for more general cases, higher orders and higher dimensions. The task is made even more complex in the presence of points which are repeated or not affinely independent, in which case the restriction $\det(Y) \neq 0$ must also be taken into account. No general enough strategy is known today.

We show in Section 5.2 and 5.3 that, if we consider a special subset of bases, there are indeed

natural and general enough ways to define sets of auxiliary functions, as well as the corresponding evaluation graph, by using the combinatorial correspondence that we explore in this work.

2.3 Vector configurations and oriented matroids

We give here a bare-bone introduction to the properties of oriented matroids. For a complete introduction to the subject, we refer the reader to, e.g., [29].

Let $A = \{a_1, \dots, a_n\}$ be a multiset of points $a_i \in \mathbb{R}^d$, not necessarily affinely independent or even distinct[1]. For each point a_i, define its *projective lift* as $v_i := (a_i, 1) \in \mathbb{R}^{d+1}$, and let $V := \{v_1, \dots, v_n\}$ be the *vector configuration* corresponding to A. Since vectors in V are just a projective representation of points in A, with a slight abuse of notation we will talk indifferently about points in A or points in V.

Consider a vector $y \in \mathbb{R}^{d+1}$, and define the sign vector $\Sigma(y) \in \{-, 0, +\}^{|V|}$ as

$$\Sigma(y) := \{(\mathrm{sign}(\langle y, v_1\rangle), \dots, (\mathrm{sign}(\langle y, v_n\rangle))\} \tag{2.5}$$

We use uppercase letters such as X, Y, etc. to denote sign vectors, e.g., $X := \Sigma(y)$, and we denote by $X_v := \mathrm{sign}(\langle y, v\rangle)$ the sign that X (equivalently, y) takes on $v \in V$. Notice that different vectors y can give rise to the same sign vector. As y varies over all possible vectors in $\mathbb{R}^{d+1}$ (i.e., over all partitions by hyperplanes of A), we collect all the sign vectors $\Sigma(y)$ into a set $\mathcal{M}(V)$,

$$\mathcal{M}(V) := \{\Sigma(y) : y \in \mathbb{R}^{d+1}\}. \tag{2.6}$$

Clearly, $\mathcal{M}(V)$ does not in general contain all possible sign vectors of length $|V|$. The all-zero sign vector $\mathbf{0} := \Sigma(0) = \{0, \dots, 0\}$ belongs to $\mathcal{M}(V)$, and if $X := \Sigma(y) \in \mathcal{M}(V)$, then $-X = -\Sigma(y) = \Sigma(-y) \in \mathcal{M}(V)$. Furthermore, let $X := \Sigma(y_1)$ and $Y := \Sigma(y_2)$, and consider the vector $z := y_1 + \varepsilon y_2$. For sufficiently small positive values of ε, the sign vector $X \circ Y := \Sigma(z)$ has components

$$(X \circ Y)_v = X_v \text{ if } X_v \neq 0,\ (X \circ Y)_v = Y_v \text{ otherwise.}$$

The sign vector $X \circ Y$ is the *composition* of X and Y, and clearly $X \circ Y \in \mathcal{M}(V)$ whenever X, $Y \in \mathcal{M}(V)$.

Define the *separation set* of two sign vectors X and Y as

$$S(X, Y) := \{v \in V : X_v = -Y_v \neq 0\}.$$

Two sign vectors such that $S(X, Y) = \varnothing$ are said to be *compatible*, and they agree on all components on which they are both nonzero. In this case, $\mathrm{sign}(\langle z, v\rangle)$ is independent of $\varepsilon > 0$, and therefore $X \circ Y = Y \circ X$. We say in this case that the composition is *conformal*. If the separation set is nonempty, i.e., if there are vectors y_1, y_2, and v with $\mathrm{sign}(\langle y_1, v\rangle) \cdot \mathrm{sign}(\langle y_2, v\rangle) < 0$, then clearly there is a linear combination z of y_1 and y_2 with positive coefficients such that $\langle z, v\rangle = 0$. In other words, if $v \in S(X, Y)$ then there is a $Z \in \mathcal{M}(V)$ with $Z_v = 0$ but $Z_w = (X \circ Y)_w$ for all $w \notin S(X, Y)$.

We have proved that $\mathcal{M}(V)$ satisfies the following list of properties:

Proposition 2.1 (Covector axioms)**.** *Let $\mathcal{M} := \mathcal{M}(V)$. Then the following are true:*

[1] We implicitly require that the points in A do not all lie on a proper affine subset of $\mathbb{R}^d$, i.e., that $\mathrm{aff}(A) = \mathbb{R}^d$.

(P1) $\mathbf{0} \in \mathcal{M}$ *(neutral element);*

(P2) $X \in \mathcal{M} \Rightarrow -X \in \mathcal{M}$ *(symmetry);*

(P3) $X, Y \in \mathcal{M} \Rightarrow X \circ Y \in \mathcal{M}$ *(closure under composition);*

(P4) for every $X, Y \in \mathcal{M}$ *and every* $v \in S(X, Y)$*, there is an element* $Z \in \mathcal{M}$ *such that* $Z_v = 0$ *and* $Z_w = (X \circ Y)_w$ *for all* $w \notin S(X, Y)$ *(elimination).*

Abstractly, any set of sign vectors satisfying properties (P1)–(P4) is called the set of *covectors*[2] of an *oriented matroid* on the ground set V, see e.g. [29] or [30, Chapter 6]. If the sign vectors can all be obtained via linear functionals on a set of vectors (equivalently, hyperplane configurations on a set of points) as in (2.5) and (2.6), then the oriented matroid is said to be *realizable*.

For a covector X, we distinguish three important subsets X^-, X^0 and X^+, defined as

$$X^\sigma := \{v \in V : X_v = \sigma\},\ \sigma \in \{-, 0, +\},$$

so that, for any covector X, we have $V = X^- \sqcup X^0 \sqcup X^+$. If X and Y are two compatible covectors, i.e., $S(X, Y) = \varnothing$, then they agree on all nonzero components, and it is possible to define a partial ordering between them according to

$$X < Y \text{ if } S(X, Y) = \varnothing \text{ and } X^0 \supset Y^0. \tag{2.7}$$

A nonzero covector X having a maximal number of zeros according to (2.7), i.e., such that $Y < X \Rightarrow Y = \mathbf{0}$, is called a *cocircuit*. The set of cocircuits is denoted by $\mathcal{C}^*$. By Definition (2.5), cocircuits of $\mathcal{M}(V)$ correspond to hyperplanes passing through the maximal number of points in A, i.e., maximal linear dependencies in V.

The covectors obtained from a cocircuit by adding the minimal amount of nonzero components are called *colines*. In other words, L is a coline if $\mathbf{0} < X < L$ implies that X is a cocircuit. For general oriented matroids, by a remarkable theorem of Folkman and Lawrence [31, 32], cocircuits and colines have a natural graph structure that we can encode via the following definition.

Definition 2.2. *The cocircuit graph* $\mathcal{G}$ *of* $\mathcal{M}$ *is a graph whose vertices are the cocircuits of* $\mathcal{M}$*, and where two vertices* X *and* Y *are connected by an edge if and only if their composition is conformal and is a coline.*

We will use the cocircuit graph extensively in our study of multivariate spline bases. The task will be made easier by the fact that $\mathcal{G}$ is simple and has no isolated vertices, two facts that we state here precisely and for which we provide, for completeness, a proof in Appendix A.1.

Lemma 2.3. *Any coline* L *can be expressed as the conformal composition* $L = X \circ Y$*,* $S(X, Y) = \varnothing$ *of two cocircuits* $X, Y \in \mathcal{C}^*$ *in a unique way.*

Lemma 2.4. *Let* X *be a cocircuit. Then there exists another cocircuit* Y *with* $S(X, Y) = \varnothing$ *such that* $L = X \circ Y$ *is a coline.*

[2] Many alternative sets of axioms exist for oriented matroids. We adopt here the *covector axioms*, and identify for ease of presentation the set of covectors with the oriented matroid itself.

We will use the cocircuit graph later in order to relate spline configurations. Specifically, we will associate a multivariate simplex spline to some subset of the cocircuits of an oriented matroid, and then we will use a suitable orientation of the cocircuit graph to find all the spline functions supported on a given point.

2.4 Single-element liftings and zonotopal tilings

Starting from the oriented matroid $\mathcal{M}(V)$ defined in the previous section, we can define another oriented matroid $\widehat{\mathcal{M}(V)}$ as follows. Add to V an extra element $\gamma \notin V$, the "point at infinity", and construct an oriented matroid over $V \sqcup \{\gamma\}$ satisfying properties (P1)–(P4). Denote all the obtained covectors $\widehat{X} := (X, \sigma)$, where X are the signs over the original vectors in V, and σ is the additional sign corresponding to γ. If

$$\mathcal{M}(V) = \{X : (X, 0) \in \widehat{\mathcal{M}(V)}\},$$

i.e., $\mathcal{M}(V)$ is embedded in $\widehat{\mathcal{M}(V)}$ as the set of covectors with the last sign equal to zero, then $\widehat{\mathcal{M}(V)}$ is called a *single-element lifting* of $\mathcal{M}(V)$. Notice that $\widehat{\mathcal{M}(V)}$ is not required to be realizable. For the detailed construction method of single-element liftings, see e.g. [29, Chapter 7]. Obviously, if X is a cocircuit of $\mathcal{M}(V)$, then $(X, 0)$ is a cocircuit of $\widehat{\mathcal{M}(V)}$. The lifting is however completely determined by the cocircuits of the form $\widehat{X} := (X, +)$, which are called *positive cocircuits* of $\widehat{\mathcal{M}(V)}$. We denote the restriction of the cocircuit graph $\mathcal{G}$ to positive cocircuits by $\mathcal{G}_+$.

Even if on the surface they appear rather abstract, single-element liftings $\widehat{\mathcal{M}(V)}$ have a very important and simple representation. Starting from the vector configuration V, consider the geometrical region $Z(V) \subset \mathbb{R}^{d+1}$ defined as

$$Z(V) := \{\sum_{v \in V} \alpha_v v : 0 \leqslant \alpha_v \leqslant 1\},$$

which we can rewrite more succinctly using the *Minkowski sum* notation as

$$Z(V) := \sum_{v \in V} [0, v].$$

As a sum of segments, $Z(V)$ is a convex polytope known as a *zonotope*. An example is shown in Figure 1. We can also associate, to each positive cocircuit $\widehat{X} := (X, +)$ of $\widehat{\mathcal{M}(V)}$, another zonotope

$$Z_X = \sum_{u \in X^+} u + \sum_{v \in X^0} [0, v]. \tag{2.8}$$

It is a very remarkable fact that the zonotopes $\{Z_X : \widehat{X} \in \mathcal{C}^*\}$ fit together without overlapping, and completely cover $Z(V)$ (see Figure 1). In other words, the regions Z_X are the tiles of a *zonotopal tiling* $\mathcal{P}$ of $Z(V)$, and we have the following fundamental result [33–35]:

Theorem 2.5 (Bohne-Dress)**.** *Single-element liftings $\widehat{\mathcal{M}(V)}$ of the oriented matroid $\mathcal{M}(V)$ are in bijection with zonotopal tilings of $Z(V)$.*

This bijection allows a very intuitive visualization of the positive cocircuit graph $\mathcal{G}_+$, which we show in Figure 1: cocircuits corresponds to tiles of $\mathcal{P}$, and the colines joining them correspond

to the faces between neighboring tiles.

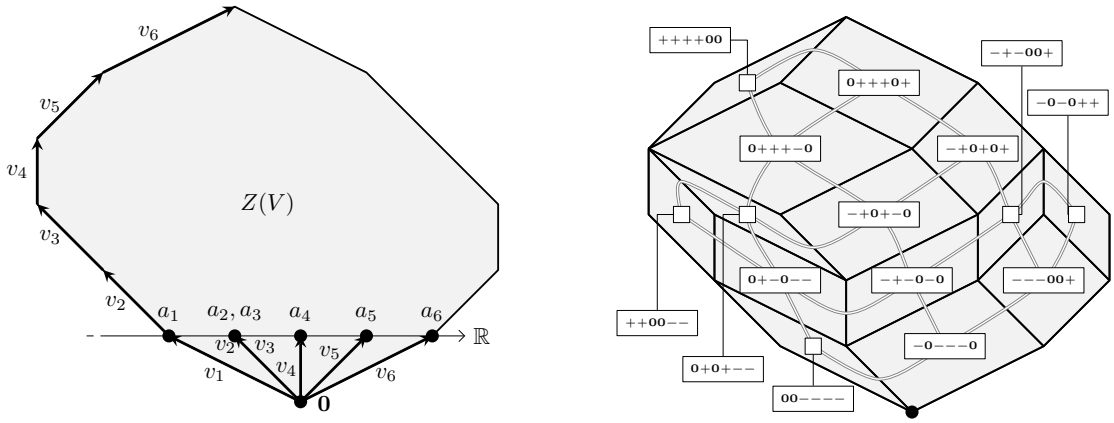

Figure 1: *Left*: a multiset of points $a_1, \ldots, a_6$ in $\mathbb{R}$, with $a_2 = a_3$, their projective lifts $v_1, \ldots, v_6$ and the zonotope $Z(V)$. *Right*: a fine tiling of $Z(V)$, the positive cocircuits associated to each tile, and the positive cocircuit graph $\mathcal{G}_+$. For each cocircuit $\widehat{X} := (X, +)$, we only show the sign vector X for brevity.

Among all possible single-element liftings $\widehat{\mathcal{M}(V)}$, or equivalently, zonotopal tilings $\mathcal{P}$ of $Z(V)$, we will specifically focus on those for which

$$\left|X^0\right| = d + 1 \text{ for all } (X, +) \in \mathcal{C}^*.$$

Following [36, 37] we say that the lifting is *simplicial*. Importantly, notice that no such restriction is imposed on the cocircuits of the form $(R, 0)$, so that the underlying point multiset is allowed to be as general as possible. This property translates to the equivalent statement for the tiling $\mathcal{P}$ that each tile Z_X is spanned by exactly $d + 1$ affinely independent segments. In this case, the tiling is called *fine*. The following theorem ensures the existence of such a lifting.

Theorem 2.6 (Shephard, [38])**.** *Every zonotope $Z(V)$ admits a fine zonotopal tiling, and all fine tilings of $Z(V)$ have the same number of tiles, namely one full-dimensional tile for each maximal linearly independent subset of V.*

Simplicial liftings satisfy two properties that will be very useful in the next section, and that we state hereafter, deferring the proof to Appendix A.2. First, no matter the degeneracy of the point multiset A, any positive cocircuit $\widehat{X}$ always has a zero set X^0 that spans a non-degenerate simplex, in accordance with the fact that the corresponding tile Z_X via (2.8) is full-dimensional.

Lemma 2.7. *Let $\widehat{\mathcal{M}(V)}$ be a single-element lifting of an oriented matroid built on a point configuration matroid with rank $d + 1$. Then, for every cocircuit $(X, +)$, such that $\left|X^0\right| = d + 1$,* $\det(X^0) := \det(v_i)_{v_i \in X^0} \neq 0$.

This lemma will prove extremely valuable in the following section, when we will associate spline functions to positive cocircuits, as it always provides a non-degenerate subset Y for the application of the recurrence formula (2.2b).

Second, the neighbors in $\mathcal{G}_+$ of a simplicial cocircuit (Lemma 2.4) can easily be found, as they correspond to the neighbors of the tile Z_X. After denoting by $X_{v,\sigma}$ the sign vector obtained by setting the component X_v equal to σ, we have the following characterization.

Lemma 2.8. *Let $\widehat{\mathcal{M}(V)}$ be a simplicial single-element lifting point configuration oriented matroid. Then, for each $u \in X^0$, the sign vector $(L,+) := (X_{u,\sigma},+)$ is a coline of $\widehat{\mathcal{M}(V)}$ for $\sigma \in \{-,+\}$, and all positive colines can be obtained in this way. In particular, all colines of the form $(L,+)$ have $\left|L^0\right| = d$.*

This property shows that, starting from a cocircuit $\widehat{X}$, all its neighboring cocircuits in $\mathcal{G}$ can be found by simply moving one of the vectors from X^0 to X^- or to X^+, providing a simple way to navigate $\mathcal{G}_+$. These properties become much more intuitive when translated in the language of zonotopal tilings, see Figure 1.

Finally, one can remove a point a from A and consider the corresponding zonotope $Z(V\backslash\{v\})$, where $v = (a,1)$. Then, any (fine) tiling $\mathcal{P}$ of $Z(V)$ induces a (fine) tiling $\mathcal{P}_v$ of $Z(V\backslash\{v\})$, or indeed of any zonotope built on a subset of V, as follows.

Lemma 2.9. *Let $\mathcal{P}$ be a zonotopal tiling of $Z(V)$. Then*

$$\mathcal{P}_v := \left\{Z_X \in \mathcal{P} : v \in X^-\right\} \sqcup \left\{Z_Y : Y = X_{v,-}, v \in X^+, Z_X \in \mathcal{P}\right\} \tag{2.9}$$

is a zonotopal tiling of $Z(V\backslash\{v\})$. Similarly, for any $Q = \{v_1,\dots,v_p\} \subset V$,

$$\mathcal{P}_Q := \left\{Z_Y : Y = X_{Q,-},\ X^0 \cap Q = \varnothing,\ Z_X \in \mathcal{P}\right\}, \tag{2.10}$$

is a zonotopal tiling of $Z(V\backslash\{v_1,\dots,v_p\})$.

Proof. For (2.9), see e.g. Proposition 4.3 of [39]; (2.10) follows from (2.9) by repeated application. □

This induced tiling can be used effectively to study how a zonotopal tiling (and the associated spline basis, as we will see shortly) depends on a given point or set of points, and thus it can be used to find an iterative construction process. We will show in Section 4.2 how this relates to the spline basis construction algorithm proposed by Liu and Snoeyink [9–11].

3 Main contributions

Neamtu showed [13] that, given an infinite set of points A in $\mathbb{R}^d$ and under some technical conditions, the higher-order Delaunay configurations of A can be put in one-to-one correspondence with spline functions, such that the splines associated to all order-p configurations contain in their linear span all the polynomials up to degree p on $\mathbb{R}^d$. This result can be restricted to finite sets of points by limiting the domain on which polynomials are reproduced. However, Delaunay configurations are ill-defined when there are subsets of $d+1$ points that are affinely dependent, and it is not immedately clear how to extend their definition to multisets with repeated points, thus constraining the practical applications of the construction. Even though this problem can be sometimes mitigated in the case $d = 2$ [27], no general proof or characterization of the polynomial-reproducing property of these spline bases is known, especially when repeated

or affinely dependent points are placed in the interior of the domain, for example in order to reduce the regularity of the basis or create localized disconnections.

In the first part of this work (Section 4), we provide a generalization of Neamtu's result. Specifically, we show in Theorem 4.7 of Section 4.1, that the set of positive cocircuits of any simplicial single-element lifting, built on any finite multiset of points A via the standard techniques outlined in Section 2, yields polynomial-reproducing spline bases for all $0 \leqslant p \leqslant |A| - d - 1$. The generalization is twofold: the set of points is allowed to contain affinely dependent subsets and repeated points, and many different bases can be constructed on the same multiset of points. One immediate consequence is that, if points on the convex hull $\operatorname{conv}(A)$ are repeated $p+1$ times in the multiset A, then the polynomial reproduction property at degree p is valid in the whole domain $\operatorname{conv}(A)$ (Proposition 4.8), analogously to the behavior of clamped knot vectors in one-dimensional spline theory. This is an important feature in view of practical applications, as it allows to define boundary conditions.

In Section 4.2, we show that, even with all their generality, these spline bases admit for any space dimension d an iterative construction process similar to that studied in the bivariate case by Liu, Snoeyink and Schmitt [9–11]. In particular, we obtain a generalization of their approach in Proposition 4.14, although this does not immediately yield a practical algorithm for all possible bases associated to simplicial single-element liftings.

In the second part of this work (Section 5), we focus on a subset of spline bases, namely those derived from weighted Delaunay triangulations. We show that, thanks to a crucial realizability property (Theorem 5.2), these bases are much more amenable to direct numerical manipulation. Specifically, we show in Section 5.1 that, in this case, Proposition 4.14 does in fact yield a very practical construction algorithm. In two dimensions, this algorithm corresponds to Liu and Snoeyink's construction [9, 10] restricted to only use the same weighted Delaunay triangulation at each step. By slightly generalizing some of their definitions, we are therefore able to prove that the same approach is guaranteed to converge and produce spline bases for all point multisets and for any order and number of space dimensions (Algorithm 1).

Section 5.2 and Section 5.3, are devoted to two important computational aspects of unstructured multivariate spline bases. The first challenge can be expressed via the following question: given a point $x \in \mathbb{R}^d$, how do we efficiently determine which spline functions in a basis are supported on x? With the standard spline basis in one dimension, this problem is trivial, as the span on which a spline function is nonzero is simply a sequence of adjacent knot intervals. The problem then reduces to simply determining the knot interval in which x falls, and this efficiency carries over to higher dimensions via the standard tensor-product technique. However, for unstructured multivariate splines in two or more dimensions, the problem complicates significantly, as there is no equivalent set of knot intervals shared by all spline functions in a basis (see e.g. [40]). Without an efficient algorithm, we are left with the naive approach, consisting of checking for every spline function whether x falls in the convex hull of its defining points. This entails a computational complexity proportional to the total number of splines in the basis, which is not practical in many applications. Fortunately, as we are able to show in Section 5.2, an algorithm whose complexity is only proportional to the number of supported functions can be devised for weighted Delaunay spline bases (Algorithm 2). This algorithm relies on the cocircuit graph presented in the previous section, and has the characteristic that the shape of the evaluation path depends on the value of x.

The second important challenge, which we tackle in Section 5.3, is related to the previous one,

and consists in determining the value of all spline functions of the basis on a given point $x \in \mathbb{R}^d$. The availability of such an algorithm is crucial for applications in approximation theory and numerical quadratures, where many such evaluations have to take place. Again, for the standard one-dimensional spline basis, the problem is completely solved by the well-known algorithm `BSPLVP` of [7, Chapter X, Algorithm 8], which allows to evaluate all basis splines of order p on a point x starting from the knowledge of the values of basis splines of order $p-1$. The same approach is doomed to fail in dimension greater than one, as splines of order $p-1$ are insufficient to determine, through the recurrence formula (2.2b), the value of all basis splines of order p [28]. Some authors use appropriate linear combinations of basis splines (see e.g. [10, Chapter 8] and [27]), which allows to shift the problem from the order p to the order $p-1$, but this trick cannot be repeated more than once, and thus fully solves the problem only for $p \leqslant 1$. In the context of DMS splines [21], some authors ([41–43], see also [40, 44] for some practical applications) employ heuristic rules and hash maps to determine and store a set of additional, auxiliary spline functions that allow to complete the evaluation graph for all splines of interest. However, these approaches are not immediately applicable to splines based on more general point sets and Delaunay configurations, and we are not aware of any such extension. Moreover, without any grounding on a solid underlying structure, this kind of approach can lead to the introduction of an excessive amount of auxiliary functions, defeating the purpose of efficient spline evaluation. We are able to show in Section 5.3 that, in the case of weighted Delaunay bases, a sufficient set of auxiliary functions can naturally be determined once and for all without resorting to heuristic rules, and the resulting evaluation graph can be pre-computed and stored for maximum evaluation efficiency. The same x-dependent orientation used for the determination of spline functions supported on x can then be used also for the evaluation of all basis splines at the same point (Algorithm 4).

We believe that these results can be useful in mitigating some of the computational issues of unstructured multivariate splines, thus helping to unlock their potential for many applications in approximation and analysis.

4 Simplex spline bases

In approximation theory and numerical simulations, bases of functions that contain in their span all the poynomials up to a given degree are said to be polynomial-reproducing. Since polynomials are dense in continuous functions, this property allows to guarantee, under some conditions, many desirable properties of the basis. One very important example is the degree of convergence of the approximation, which, for bases that reproduce polynomials of degree p, is often proportional to h^p, where h is some characteristic size of the basis, e.g., the average spacing of the points in A. By proving this property for Delaunay configurations, Neamtu [13] showed that the associated spline bases are interesting for approximation, and have maximal convergence for a given degree. We introduce here briefly his results, before proposing a generalization.

First, let us recall the definition of the *polar form* of a polynomial (see e.g. [45]):

Definition 4.1. *Let $q(x)$, $x \in \mathbb{R}^d$, be a d-variate polynomial of degree at most p. Then there exists a unique function $Q(x_1, \dots, x_p)$ of the d-dimensional variables $\{x_1, \dots, x_p\}$ that is affine in each argument, symmetric under any permutation of its arguments, and agrees with q on the diagonal, i.e., $Q(x, \dots, x) = q(x)$. Q is called the* polar form *of q.*

Let now A be an infinite set of points in $\mathbb{R}^d$ in general position (i.e., where any subset of $d+1$ points is affinely independent), and make the technical assumption that A has no accumulation point. Define a *Delaunay configuration* X of order p as any pair of subset $X := (X_B, X_I)$ of A with $|X_B| = d+1$ and $|X_I| = p$ such that the sphere circumscribed to X_B contains in its interior the points X_I and no other point of A. To each such configuration, associate the $(d+1)$-variate spline function of order p

$$M(x \mid X) := M(x \mid X_B \cup X_I).$$

Then Neamtu's spline basis property can be stated as follows:

Theorem 4.2 (Neamtu)**.** *For all $x \in \mathbb{R}$ and any polynomial $q(x)$ with associated polar form Q,*

$$q(x) = \frac{(p+1)!}{p!} \sum_{X \in D_p} Q(X_I)\det(X_B)M(x \mid X),\ x \in \mathbb{R}^d$$

where the sum is extended to the set D_p of all order-p Delaunay configurations of A and $p \geqslant 0$.

This is a very important result, as it gives a sufficient condition to select subsets of A whose associated splines contain all polynomials up to a certain degree in their span. Moreover, Theorem 4.2 implies that the reproduction is *tight*, i.e., polynomials of a given degree p only require splines of degree p. However, Neamtu's result suffers from some strong assumptions on A, notably the infiniteness of the set and the affine independence of all subsets of A of size $d+1$.

In Section 4.1 we provide an extension of Neamtu's construction to a more general setting. Specifically:

- We let A be any finite multiset of points, without any restriction, including affinely dependent and/or repeated points (Theorem 4.7). This inclusion is essential for practical applications, as it allows to locally reduce the regularity of the spline basis as well as to produce basis functions that are nonzero on the boundary of $\mathrm{conv}(A)$, allowing for the imposition of boundary conditions (Corollary 4.8). The corresponding behavior of one-dimensional spline bases is well known, but its use in the multivariate setting has been generally plagued with complicated degenerate geometric configurations that need to be treated separately and carefully;

- Since A is finite, the basis does not in general reproduce polynomials in the whole domain $\mathrm{conv}(A)$. We give via (4.4) a precise characterization of the zone of polynomial reproduction that is valid for any general multiset A;

- We show that any simplicial single-element lifting $\widehat{\mathcal{M}(V)}$ built on A gives rise to a spline basis for all orders $0 \leqslant p \leqslant |A| - d - 1$ (Theorem 4.7). This extends Neamtu's result to a much larger family of structures, since liftings do not need to be based on Delaunay triangulations, nor even be realizable. Correspondingly, many more polynomial-reproducing spline bases can be envisaged, even in the one-dimensional case, as shown for example in Figure 2.

This extension, which is the main result of Section 4.1, can be summarized as follows. Let A be any finite multiset of points in $\mathbb{R}^d$, and let $\widehat{\mathcal{M}(V)}$ be any simplicial single-element lifting of the

point configuration matroid, as defined in the previous section. We associate to each positive cocircuit $\widehat{X} := (X, +) \in \mathcal{C}^*$ the $(d+1)$-variate spline of order $p = |X^+|$, defined as

$$M(\cdot \mid X) := M(\cdot \mid X^0 \sqcup X^+). \tag{4.1}$$

Notice that distinct cocircuits can produce the same spline function. Then, Neamtu's result can be generalized through the following theorem, whose proof is given in Section 4.1.

Theorem 4.7. *Denote by $\mathcal{C}^*$ the set of cocircuits of $\widehat{\mathcal{M}(V)}$, and let $\mathcal{C}^*_p := \{(X, +) \in \mathcal{C}^* : |X^+| = p\}$ for all $0 \leqslant p \leqslant |A| - d - 1$. Then, for any polynomial $q(x)$,*

$$q(x) = \frac{(p+d)!}{p!} \sum_{(X,+)\in\mathcal{C}^*_p} Q(X^+)\det(X^0)M(x \mid X) \text{ for all } x \in \operatorname{conv}_p(A),$$

where $M(\cdot \mid X)$ is the spline function defined via (4.1), Q is the polar form of $q(x)$ and

$$\operatorname{conv}_p(A) = \bigcap_{\substack{B\subseteq A\\ |B|=n-p}} \operatorname{conv}(B) \tag{4.4}$$

is the intersection of the convex hulls of all subsets of A of size $|A| - p$ taken with repetitions.

By exploiting the possibility of repeating points in A, we obtain the following important corollary.

Corollary 4.8. *Assume that each vertex of $\operatorname{conv}(A)$ is repeated at least $p+1$ times in A. Then, in the same conditions as Theorem 4.7, the splines $M(\cdot \mid X)$ for $(X, +) \in \mathcal{C}^*_p$ reproduce polynomials up to order p on the whole $\operatorname{conv}(A)$.*

This fact is a multivariate generalization of the behavior of *clamped* (also called *open*) knot vectors in one dimension.

Algorithms for the construction of Delaunay configurations (or, rather, their dual higher-order Voronoi diagrams) have been known for some time [46]. By reinterpreting these methods in the context of spline bases, Liu and Snoeyink [9–11] have proposed an algorithm for the construction of two-dimensional spline bases. Starting from a triangulation of the point set A, their algorithm works by selecting for every vertex a the region corresponding to the union of all faces incident on a (the *vertex link* of a, see e.g. [47]) and triangulating it. Each newly produced triangle, with vertices b, c and d, is associated to a configuration (and therefore a spline function) with $X_I = \{a\}$ and $X_B = \{b, c, d\}$. The process then continues by triangulating the higher-order vertex links composed of all faces adjacent to either vertex in the couples $\{a, b\}$, $\{a, c\}$ and $\{a, d\}$, and iterating. At each iteration p, the spline basis of order p is produced. The correct way of defining the link region near the boundary of $\operatorname{conv}(A)$ has been made precise by Schmitt [11], who also proved the correctness of the algorithm in two dimensions for all orders p.

Liu and Snoeyink's algorithm does not restrict the kind of triangulation performed at each step, thus providing a generalization of Neamtu's Delaunay configurations. However, for $d > 2$, no version of the algorithm is available. In particular, there is no known condition under which the link regions are all guaranteed to be triangulable, allowing the algorithm to converge. Moreover, the case of affinely dependent and/or repeated points is usually treated with symbolic perturbation, which creates ambiguous configurations and does not allow to extend the proofs of

convergence easily. This problem becomes even harder to treat as the number of space dimensions grows.

We provide a condition on the triangulation process that guarantees the convergence of the algorithm in all space dimensions in Section 5.1. As a prerequisite to that result, we show in Section 4.2 hereafter how the Bohne-Dress theorem can be used to reinterpret the spline bases built on top of a simplicial single-element lifting in terms which are very similar to Liu and Snoeyink's algorithm. More specifically, given any positive cocircuit $\widehat{X} := (X, +)$, we provide a natural definition of the *link region* $\mathcal{R}(X^+)$ associated to its positive subset X^+ (Definition 4.10), which generalizes naturally the notion of vertex link. Given this definition, the main result of the section is as follows:

Proposition 4.14. *There exists a choice of triangulations $\mathcal{T}_Q$, one for every link region $\mathcal{R}(Q)$ associated to each positive cocircuit $\widehat{X} := (X, +)$, $Q := X^+$, such that $\widehat{\mathcal{M}(V)}$ (and its associated spline basis) can be constructed as follows:*

(i) Let $\mathcal{X}_0^+ = \{\varnothing\}$;

(ii) For every $0 \leqslant p \leqslant |A| - d - 1$ and for every $Q \in \mathcal{X}_p^+$, let $\mathcal{R}(Q)$ be the link region (4.10), and let $\mathcal{T}_Q$ be its triangulation. Let the union of all the cocircuits

$$\mathcal{C}_p^*(Q) := \{(X, +) : X^+ = Q,\ X^0 = T\}$$

for all $Q \in \mathcal{X}_p^+$ and every simplex T in $\mathcal{T}_Q$ with vertices $T = \{a_1, \dots, a_{d+1}\}$ be the set of positive cocircuits of order p of $\widehat{\mathcal{M}(V)}$;

(iii) Let

$$\mathcal{X}_{p+1}^+ = \{X^+ \sqcup \{u\} : (X, +) \in \mathcal{C}_p^*,\ u \in X^0,\ \mathcal{R}(X^+ \sqcup \{u\}) \neq \varnothing\} \tag{4.13}$$

be the set of all the possible subsets X^+ of positive cocircuits of order $p + 1$;

(iv) Repeat steps (ii) and (iii) until $\mathcal{X}_p^+ = \varnothing$.

This proposition, whose proof is given in Section 4.2, states essentially that any simplicial single-element lifting $\widehat{\mathcal{M}(V)}$ can be obtained via a version of Liu and Snoeyink's algorithm, provided that we know in advance which triangulation needs to be applied to each subset X^+. In other words, it proves that their algorithm is a rather universal way of constructing spline bases.

However, Proposition 4.14 stops short of providing a fully-formed construction algorithm, as it does not guarantee that any given choice of triangulations leads to a valid construction, only that such a choice exists. The construction algorithm is delayed until Section 5.1, where we focus again on the subset of liftings associated to (weighted) Delaunay triangulations, and prove in this special case the triangulability of the link regions and the convergence and correctness of the algorithm for all orders, number of space dimensions and multiset of points A.

4.1 Proof of polynomial reproduction

Neamtu gives a proof of the polynomial reproduction property of spline bases associated to Delaunay configurations in Theorem 4.1 of [13]. In his proof, a structural property regarding

neighbouring pairs of Delaunay configurations, the edge matching property proved in Proposition 2.1 of the cited paper, plays a pivotal role.

Proposition 4.3 (Edge matching)**.** *Define Delaunay configurations of order p as all pairs of subsets of A, $X := (X_B, X_I)$ with $|X_B| = d+1$ and $|X_I| = p$, such that the sphere circumscribed to X_B only contains the points X_I in its interior. Similarly, define Delaunay faces of order p as the pairs $F := (F_B, F_I)$ with $|F_B| = d$ and $|F_I| = p$ such that there exists a sphere circumscribed to F_B containing only F_I in its interior. Then for every Delaunay face F of order p there exist two Delaunay configurations X, Y such that $F_B = X_B \cap Y_B$. Furthermore, X and Y have both order p, both order $p-1$, or orders p and $p-1$ respectively. The two points $u \in X_B \backslash Y_B$ and $v \in Y_B \backslash X_B$ are separated by the plane* $\mathrm{aff}(F_B)$ *if and only if X and Y have the same order.*

A consequence of this property is that faces between Delaunay configurations of order p appear in pairs when summing over all such configurations, and the mutual position of the removed points u, v leads to cancellations in the sum. This is the fundamental trick that underpins the proof of the polynomial reproduction property in Neamtu's paper. Both the algorithmic generalization proposed by Liu and and Snoeyink [10] and the geometric description of Schmitt in terms of families of convex Jordan curves [11] are shown to preserve this structural property, and they rely on it for their polynomial reproduction property.

We prove here that Proposition 4.3 is analogous to a more general, similar property of simplicial single-element liftings. This implies that a spline basis can be built, more generally, on any such lifting. In the following, for ease of notation, A will always denote a multiset of n points in $\mathbb{R}^d$, possibly with repetitions, V its projective lift, $\mathcal{M}(V)$ the oriented matroid of V and $\widehat{\mathcal{M}(V)}$ a simplicial single-element lifting of $\mathcal{M}(V)$, as defined in Section 2.

Proposition 4.4. *Let $\widehat{L} = (L, +) \in \widehat{\mathcal{M}(V)}$ be a coline with $|L^+| = p$. Then $\widehat{L}$ can be uniquely expressed as the conformal composition of two cocircuits $\widehat{X}$ and $\widehat{Y}$ in exactly one of the following ways:*

(i) $\widehat{X} = (X, +)$ and $\widehat{Y} = (Y, +)$ with either $|X^+| = |Y^+| = p$, $|X^+| = |Y^+| = p-1$ or $|X^+| = p$, $|Y^+| = p-1$. In this case the two points $u \in X^0 \backslash Y^0$ and $v \in Y^0 \backslash X^0$ are separated by the hyperplane $H = \mathrm{aff}(L^0)$ if and only if $|X^+| = |Y^+|$;

(ii) $\widehat{X} = (X, +)$ and $\widehat{Y} = (Y, 0)$, with $|X^+| = p$ or $p-1$, and there exists a single point $u \in X^0$ such that, for a suitable orientation of the hyperplane $H = \mathrm{aff}(L^0)$, points in X^+ are in the positive closed halfspace of H, points in X^- are in the negative closed halfspace of H, and u is in the open halfspace of H of sign $L_u \neq 0$.

Proof. By Proposition 2.3, $\widehat{L}$ can be obtained uniquely as $\widehat{L} = \widehat{X} \circ \widehat{Y}$ for two cocircuits $\widehat{X}$ and $\widehat{Y}$ of $\widehat{\mathcal{M}(V)}$ with $S(\widehat{X}, \widehat{Y}) = \varnothing$. Since the last component of $\widehat{L}$ is $+$, then the last components of $\widehat{X}$ and $\widehat{Y}$ are either both $+$, or $+$ and 0. Without loss of generality, choose $\widehat{X} = (X, +)$. Since $\det(X^0) \neq 0 \neq \det(Y^0)$ (Lemma 2.7), the d points in $L^0 = X^0 \cap Y^0$ are affinely independent, and thus define a hyperplane $H = \mathrm{aff}(L^0)$.

Consider first the case $\widehat{Y} = (Y, +)$. Since $|Y^0| = d+1$, there must be exactly two vectors u, v such that $X_u = 0 \neq Y_u$ and $Y_v = 0 \neq X_v$, with X and Y agreeing on all the other vectors. Consider the two covectors

$$P := (X, +) \circ (-Y, -), \; Q := (-Y, -) \circ (X, +). \tag{4.2}$$

Clearly, $P^0 = Q^0 = (P \circ Q)^0 = X^0 \cap Y^0$, $P_u = Q_u = (P \circ Q)_u = X_u$ and $P_v = Q_v = (P \circ Q)_v = -Y_v$. Furthermore, if γ is the extra element associated to the last coordinate in the lifting, then $P_\gamma = +$ and $Q_\gamma = -$, and therefore $\gamma \in S(P, Q)$. By property (P4), there exists another covector $\widehat{R} := (R, 0) \in \widehat{\mathcal{M}(V)}$ such that $R_u = -Y_u$, $R_v = X_v$ and $X^0 \cap Y^0 \subseteq R^0$. By (2.5) this means that there is a nonzero vector $y \in \mathbb{R}^{d+1}$ such that

$$\operatorname{sign}(\langle y, u\rangle) = -Y_u,\ \operatorname{sign}(\langle y, v\rangle) = X_v,\ \langle y, w\rangle = 0\ \forall w \in X^0 \cap Y^0. \tag{4.3}$$

Therefore, the hyperplane H defined on A by the equation $\langle y, (x, 1)\rangle = 0$ corresponds exactly to $\operatorname{aff}(L^0)$, and (4.3) implies that u and v are separated by H if $X_v = Y_u$, and on the same side of H if $X_u = -Y_v$. Counting the number of positive vectors in X and Y in the four possible sign combinations of (X_u, Y_v), we see that $(-,-)$ corresponds to $|X^+| = |Y^+| = |L^+| = p$, $(+,+)$ corresponds to $|X^+| = |Y^+| = |L^+| - 1 = p - 1$, and $(+,-)$ (resp. $(-,+)$) corresponds to $|X^+| = p$ and $|Y^+| = p - 1$ (resp. $|X^+| = p - 1$ and $|Y^+| = p$). Consequently, u and v are separated by H if and only if $|X^+| = |Y^+| = p$ or $p-1$. Notice that only the combination $(-,-)$ is possible if $p = 0$.

We focus now on the case $\widehat{Y} = (Y, 0)$. By the argument of Lemma 2.8, there is a vector $u \in X^0 \backslash Y^0$ such that $L^0 = X^0 \backslash \{u\} \subseteq Y^0$. Thus, $(Y, 0)$ is the covector associated to (a suitable orientation of) the hyperplane $H = \operatorname{aff}(X^0 \backslash \{u\})$. Then, since $S(X, Y) = \varnothing$, $Y_v \in \{0, +\}$ for $v \in X^+$, $Y_w \in \{0, -\}$ for $w \in X^-$ and $Y_u = L_u \neq 0$. In other words, points in X^+ cannot be on the negative side of H, points in X^- cannot be on its positive side, and u is on the side of sign L_u. Finally, $|X^+| = |L^+| = p$ if $L_u = -$, and $|X^+| = |L^+| - 1 = p - 1$ if $L_u = +$. □

Remark 4.5. *This proof shares some techniques with some existing proofs of the Bohne-Dress theorem, even though the focus is somewhat different. In particular, the use of the auxiliary sign vectors P and Q (4.2) is borrowed from the proof of Lemma 2.3 in [35].*

There are two major differences between the behavior of positive colines $\widehat{L} \in \widehat{\mathcal{M}(V)}$ (Proposition 4.4) and faces in Delaunay configurations (Proposition 4.3):

- The underlying point set A is finite, and therefore there is one more possibility compared to the case of Delaunay configurations, namely that a coline is shared by a positive cocircuit $(X, +)$ and a hyperplane $(Y, 0)$. We will see shortly that this fact allows to determine the region of polynomial reproduction;

- Points in A are not in general position, and can even be repeated multiple times. However, Lemma 2.7 guarantees that each cocircuit of the form $(X, +)$ has a non-degenerate subset X^0 even in this case.

Armed with this result, we are ready to prove Theorem 4.7 and establish the polynomial reproduction property for splines derived from cocircuits. We follow very closely the proof of Theorem 4.1 of [13]. Even though the proofs are similar, we give here the full derivation in order to point out the different treatment of boundary configurations and affinely dependent sets of points. We start by proving the case $p = 0$ with the following proposition.

Proposition 4.6. *Let $\mathcal{C}_0^*$ denote the set of of all cocircuts of $\widehat{\mathcal{M}(V)}$ of the form $(X, +)$ with $X^+ = \varnothing$. Then the set of simplices $\mathcal{S}_0 = \{s_X := \operatorname{conv}(X^0) : (X, +) \in \mathcal{C}_0^*\}$ triangulates $\operatorname{conv}(A)$.*

Proof. The proof can be derived from the equivalent statement for positive covectors, see [36, 48] or [29, Chapter 9]. We give here a short direct proof for convenience.

First, by Lemma 2.7, all the simplices in $\mathcal{S}_0$ are non-degenerate. Let now $(X,+)$ and $(Y,+)$ be two cocircuits in $\mathcal{C}_0^*$. Then applying property (P4) to the pair $(X,+)$, $(-Y,-)$ we obtain a covector $(R,0)$ with $R^0 = X^0 \cap Y^0$, $R^+ \supseteq X^0 \backslash Y^0$ and $R^- \supseteq Y^0 \backslash X^0$. Therefore, the simplices s_X and s_Y are separated by any hyperplane associated to $(R,0)$, and consequently have disjoint interiors.

Finally, if we consider the cocircuit $(X_{u,-},+)$, derived from $(X,+)$ by taking a point $u \in X^0$ and setting the value of X_u to $-$, we obtain a coline $(L,+)$ corresponding to a face of the simplex s_X. By Proposition 4.4, and since $L^+ = \varnothing$, this face is either shared by another cocircuit $(Y,+) \in \mathcal{C}_0^*$, i.e., another simplex $s_Y \in \mathcal{S}_0$, or it lies on a hyperplane that does not contain any point of A on its positive side, and therefore belongs to the boundary of $\operatorname{conv}(A)$. This completes the proof. □

The indicator functions of simplices in $\mathcal{S}_0$ correspond exactly to the zeroth-order splines via (2.2a). Proposition 4.6 then provides the root for the recurrence in the following proof.

Theorem 4.7. *Denote by $\mathcal{C}^*$ the set of cocircuits of $\widehat{\mathcal{M}(V)}$, and let $\mathcal{C}_p^* := \{(X,+) \in \mathcal{C}^* : |X^+| = p\}$ for all $0 \leqslant p \leqslant |A| - d - 1$. Then, for any polynomial $q(x)$,*

$$q(x) = \frac{(p+d)!}{p!} \sum_{(X,+)\in\mathcal{C}_p^*} Q(X^+)\det(X^0)M(x \mid X) \text{ for all } x \in \operatorname{conv}_p(A),$$

where $M(\cdot \mid X)$ is the spline function defined via (4.1), Q is the polar form of $q(x)$ and

$$\operatorname{conv}_p(A) = \bigcap_{\substack{B\subseteq A\\ |B|=n-p}} \operatorname{conv}(B) \tag{4.4}$$

is the intersection of the convex hulls of all subsets of A of size $|A| - p$ taken with repetitions.

Proof. Following closely the proof of Theorem 2 in [13], we simply have to prove the equation

$$\sum_{(X,+)\in\mathcal{C}_p^*} Q(X^+)\det(X^0)M(x \mid X) = \frac{p+d}{p} \sum_{(Y,+)\in\mathcal{C}_{p-1}^*} Q(Y^+ \sqcup \{x\})\det(Y^0)M(x \mid Y). \tag{4.5}$$

In fact, iterating (4.5) until $p = 0$ yields

$$\sum_{(X,+)\in\mathcal{C}_p^*} Q(X^+)\det(X^0)M(x \mid X) = \binom{p+d}{p} \sum_{(Y,+)\in\mathcal{C}_0^*} Q(x,\dots,x)\det(Y^0)M(x \mid Y),$$

which is simply equal to $(p+d)!/p!\, q(x)$ thanks to (2.2a), the definition of polar form (Definition 4.1), and the fact that the simplices defined by splines in $\mathcal{C}_0^*$ triangulate $\operatorname{conv}(A)$ (Proposition 4.6).

In order to prove (4.5), we first apply the spline recurrence formula (2.2b), to the right hand side of (4.5), obtaining

$$\sum_{(X,+)\in\mathcal{C}_p^*} Q(X^+)\det(X^0)M(x \mid X) = \frac{p+d}{p} \sum_{(X,+)\in\mathcal{C}_p^*} Q(X^+) \sum_{u\in X^0} \det({}^{x}_{u}X^0)M(x \mid X_{u,-}). \tag{4.6}$$

By Lemma 2.8 and Lemma 2.3, $(X_{u,-},+) = (L,+)$ is a coline that can be written uniquely as $(L,+) = (X,+) \circ \widehat{Y}$ for some cocircuit $\widehat{Y}$. We use Proposition 4.4 to enumerate the possibilities.

(i) If $\widehat{Y} = (Y,+)$, then either $|Y^+| = p$ or $|Y^+| = p-1$. These terms correspond to the non-essential and essential faces of [13], and the same reasoning as in the proof of Theorem 4.1 of the cited paper can be applied. Specifically, if $|Y^+| = p$, then $X_{u,-} = Y_{v,-}$, with $X^0 \sqcup X^0 \backslash \{u\} = Y^0 \sqcup Y^0 \backslash \{v\}$ and $X^+ = Y^+ = L^+$. But, since u and v are on opposite sides of $\mathrm{aff}(L^0)$,

$$\det({}^{x}_{u}X^0)Q(X^+)M(x \mid X^0 \sqcup X^0 \backslash \{u\}) = -\det({}^{x}_{v}Y^0)Q(Y^+)M(x \mid Y^0 \sqcup Y^0 \backslash \{v\})$$

and the terms corresponding to X^0 and Y^0 in (4.6) cancel each other. Only the terms with $|Y^+| = p-1$ remain, in which case $X_{u,-} = Y_{v,+}$, and thus $X^+ = Y^+ \sqcup \{v\}$ and $X^0 \sqcup X^+ \backslash \{u\} = Y^0 \sqcup Y^+$. The corresponding term can then be rewritten as

$$\frac{p+d}{p} Q(Y^+ \sqcup \{v\}) \det({}^{x}_{v}Y^0) M(x \mid Y^0 \sqcup Y^+). \tag{4.7}$$

(ii) In the case $\widehat{Y} = (R,0)$, the terms do not cancel, but by Proposition 4.4, the (suitably oriented) hyperplane $H := \mathrm{aff}(L^0)$ cannot have the points in $X^+ = L^+$ on its negative side, and it cannot have any other point of A on its positive side. Therefore, H separates at most p points of A from the remaining $n-p$ points. Furthermore, all the points in $X^0 \sqcup X^+ \backslash \{u\}$ either lie on H or on its positive side. This implies that, if $x \in \mathrm{conv}_p(A)$, then x lies outside $\mathrm{conv}(X^0 \sqcup X^+ \backslash \{u\})$, and therefore

$$M(x \mid X_{u,-}) = M(x \mid X^0 \sqcup X^+ \backslash \{u\}) = 0.$$

We apply a similar reasoning to the right hand side of (4.5). By Lemma 2.7 the $d+1$ points in Y^0 are always affinely independent, and we can write x in barycentric coordinates with respect to Y^0 as

$$x = \sum_{v \in Y^0} \frac{\det({}^{x}_{v}Y^0)}{\det(Y^0)}, \tag{4.8}$$

and since Q is multiaffine, using (4.8),

$$\sum_{(Y,+) \in \mathcal{C}^*_{p-1}} Q(Y^+ \sqcup \{x\}) \det(Y^0) M(x \mid Y) = \sum_{(Y,+) \in \mathcal{C}^*_{p-1}} M(x \mid Y) \sum_{v \in Y^0} Q(Y^+ \sqcup \{v\}) \det({}^{x}_{v}Y^0). \tag{4.9}$$

Similarly to the left hand side, by Proposition 2.8 we have that $Y_{v,+} = (L,+)$ which can be decomposed uniquely as $(L,+) = (Y,+) \circ \widehat{X}$, with either $\widehat{X} = (X,+)$ or $\widehat{X} = (R,0)$.

If $x \in \mathrm{conv}_p(A)$, the terms for which $\widehat{X} = (R,0)$ are again zero. To see this, notice that, once again, the hyperplane $H := \mathrm{aff}(L^0)$ admits an orientation that separates at most the p points in $Y^+ \sqcup \{v\} = L^+$ from the other $n-p$ points, and since $X_v = L_v = +$, the points in $(Y^0 \backslash \{v\}) \sqcup (Y^+ \sqcup \{v\}) = Y^0 \sqcup Y^+$ either lie on H or on the positive side of H. Thus, if $x \in \mathrm{conv}_p(A)$, we have once more

$$M(x \mid Y) = M(x \mid Y^0 \sqcup Y^+) = 0.$$

The remaining terms, for which $\widehat{X} = (X, +)$, again correspond to non-essential and essential faces in [13], and the same reasoning can be applied. In particular, the terms for which $|X^+| = p-1$, i.e., $X_{u,+} = Y_{v,+}$, appear again in pairs in (4.9) and cancel because $Y^+ \sqcup \{v\} = X^+ \sqcup \{u\}$, $Y^0 \sqcup Y^+ = X^0 \sqcup X^+$ and $\det(\begin{smallmatrix} x \\ v \end{smallmatrix} Y^0) = -\det(\begin{smallmatrix} x \\ u \end{smallmatrix} X^0)$. The terms for which $|X^+| = p$, i.e., $Y_{v,+} = X_{u,-}$, do not cancel and are again equal to (4.7).

Finally, since the decomposition of colines is unique, there is exactly one term of the form (4.7) for each couple of cocircuits of orders p and $p-1$ adjacent in $\mathcal{G}_+$, and therefore the left and right hand sides of (4.5) are equal, completing the proof. □

From this, Corollary 4.8 follows immediately after noticing that, if all the points on the convex hull of A are repeated at least $p+1$ times in A, then $\mathrm{conv}_p(A) = \mathrm{conv}(A)$.

Corollary 4.8. *Assume that each vertex of* $\mathrm{conv}(A)$ *is repeated at least* $p+1$ *times in* A*. Then, in the same conditions as Theorem 4.7, the splines* $M(\cdot \mid X)$ *for* $(X, +) \in \mathcal{C}_p^*$ *reproduce polynomials up to order* p *on the whole* $\mathrm{conv}(A)$*.*

4.2 Basis construction

We wish to prove that the set of positive cocircuits of $\widehat{\mathcal{M}(V)}$, and therefore the associated spline bases as defined in Section 4.1, can all be obtained via an iterative triangulation process similar to that proposed by Liu and Snoeyink [9–11] for generalized Delaunay configurations. By doing so, we will be able to extend their construction to general point multisets and arbitrary dimensions.

In order to investigate this relationship, it is convenient to to reinterpret the spline basis characterization of Section 4.1 in terms of zonotopal tilings, via the Bohne-Dress Theorem 2.5 presented in Section 2.4. Specifically, given a set of points $A \subset \mathbb{R}^d$, any fine zonotopal tiling $\mathcal{P}$ of the associated zonotope $Z(V)$ yields a polynomial-reproducing basis of spline functions for orders $p = 0, \ldots, |A| - d - 1$ in the sense of Theorem 4.7. In particular, any full-dimensional tile Z_X is associated with a spline function $M(\cdot \mid X)$ via (2.8) and (4.1), and, conversely, the vectors in the subset X^0 (the *boundary knots* of the multivariate spline) determine the shape of the tile, while the vectors in X^+ (the *interior knots*) determine its position. Notice that the set of interior knots can be read off as the set of vertices in any shortest path connecting the origin to the base of the tile, i.e., the point closest to the origin. We show this correspondence in Figure 2.

This point of view is advantageous for many reasons. First, it provides a natural way to relate our construction to the centroid triangulations that form the basis of Liu and Snoeyink's algorithm [9–11]. Second, the geometric properties of zonotopal tilings, and specifically Lemma 2.9, provide an alternative and more general way to define the vertex neighborhood (*vertex link*) that is triangulated at each step of the algorithm, thus extending its scope to point sets with repetitions and in arbitrary dimension.

The first conclusion that we can draw from this correspondence is that, as a consequence of Theorem 2.6, we automatically obtain a bound on the total number of spline functions, summed over all orders $p = 0, \ldots, |A| - d - 1$, in a basis.

Proposition 4.9. *The total number of spline functions built on a point set* A *with* $|A| = n$*, summed over all orders* $p = 0, \ldots, n - d - 1$*, is equal to the number of affinely independent subsets of* A*.*

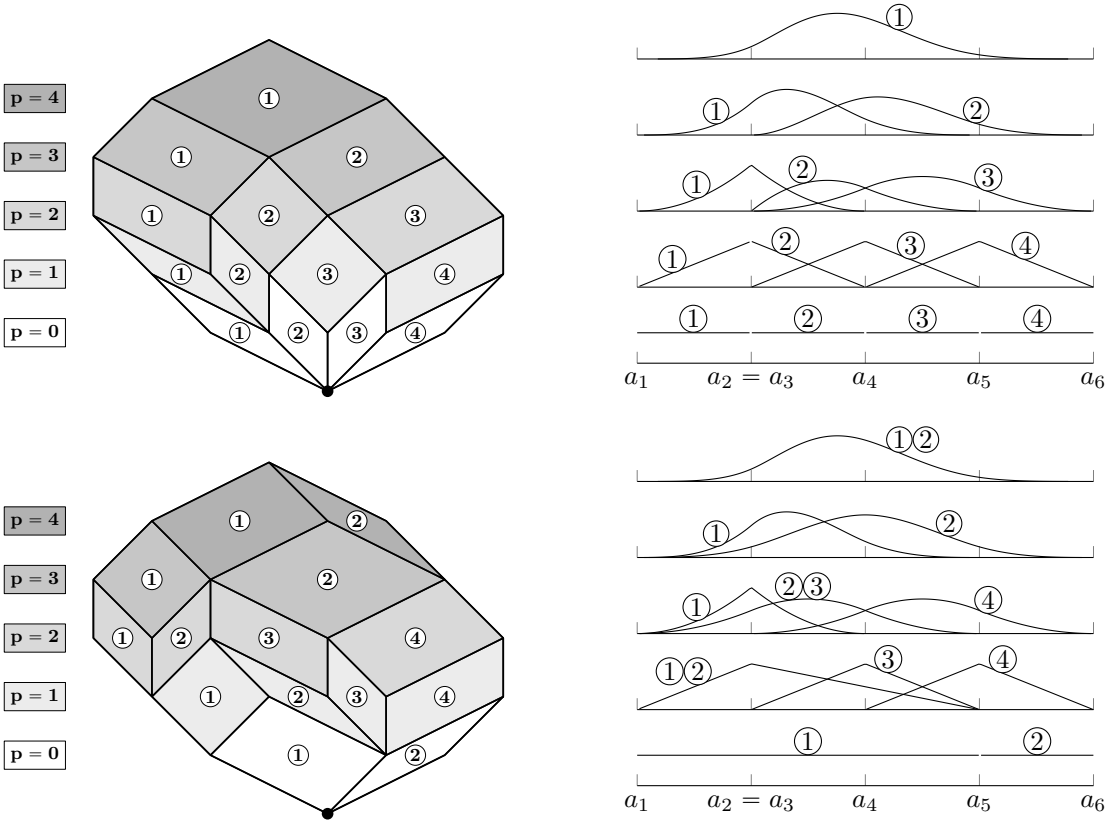

Figure 2: Two possible fine tilings of $Z(V)$ on the set of points $A := \{a_1, \ldots, a_6\}$ with $a_2 = a_3$ and their associated spline bases, for the standard one-dimensioanl B-spline basis (*top*) and an alternative tiling (*bottom*).

We now wish to investigate under which conditions a generalization of the `LinkTriangulation` algorithm from Liu and Snoeyink [9–11], which is based on the construction of a set of *centroid triangulations* [9, 10, 24–26], can be used to construct zonotopal tilings in any dimension and for a general multiset of points.

We denote by H_k the hyperplane $H_k := \{x \in \mathbb{R}^{d+1} : x_{d+1} = k\}$. The intersection

$$Q^{(k)} := Z(V) \cap H_k$$

corresponds to the set $Q^{(k)} := \{\sum_{v\in B}[0,v] : B \subseteq V, |B| = k\}$, which is just the convex hull of the points $V^{(k)} := \{\sum_{a_i\in B}(a_i,1), B \subseteq A, |B| = k\}$. $Q^{(k)}$ is also known as (a multiple of) the *k-set polytope* of A [49–51]. Just as vectors in V can be interpreted projectively as points in A, vectors in $V^{(k)}$ can be projectively reduced to the set $A^{(k)}$ of all possible averages of k points in A. The intersection $\mathcal{P} \cap H_k$ of a zonotopal tiling of $Z(V)$ with H_k then produces a subdivision of $V^{(k)}$ [39, 52] with (projective) vertices in $A^{(k)}$, which corresponds to a *centroid subdivision* in the sense of [10, 24–26].

According to (2.8), the intersection of a tile Z_X with H_k is an affine transformation of the hypersimplex $\Delta_{d+1,k-|X^+|}$, which has a positive dimension if and only if $|X^+| < k < |X^+| + d + 1$. Translated in the language of spline bases, this means that the cells in the k-th centroid subdivision induced by $\mathcal{P}$ are slices of tiles associated via (4.1) to the basis splines

$$\mathcal{SP}_k := \{M(\cdot \mid X),\, k-d-1 < \left|X^+\right| =: p < k\}.$$

For $d = 2$, only two types of cells appear in each k-th centroid triangulation for $k > 1$, corresponding to splines of order $k-1$ and $k-2$. The corresponding hypersimplices $\Delta_{3,1}$ and $\Delta_{3,2}$ are just triangles, and therefore the subdivision is a (bicolored) triangulation. This fact is widely known in the context of centroid triangilations [10, 24–26, 46] where the corresponding triangles are called type-I and type-II triangles, respectively. In dimension $d > 2$, the induced subdivision is no longer a triangulation, and the splines of all orders $k-d+1 \leqslant p \leqslant k-2$ appear in the k-th centroid subdivision as hypersimplices, e.g., octahedra for $d = 3$, $p = k-2$.

Let us now return to Liu and Snoeyink's algorithm. At every step, the algorithm builds a polygonal line, called the *link*, associated to every vertex in the k-th centroid triangulation. It can be easily checked, though we will not do it explicitly here, that the region bounded by the link associated to a configuration $Q \subset V$, $|Q| = p$ can be obtained by taking the region $\bar{\mathcal{R}}$ composed by the boundary vertices X_B of all configurations X of order $r < p$ with $Q \cap X_B = \varnothing$ and $X_I \subset Q$, and taking its complement $\mathcal{R}$. The boundary of $\mathcal{R}$ corresponds to the vertex link of Q. Motivated by this consideration, we define the *link region* of a subset $Q \subset V$ as follows:

Definition 4.10. *Given a simplicial single-element lifting $\widehat{\mathcal{M}(V)}$ of V (equivalently, a fine zonotopal tiling $\mathcal{P}$ of $Z(V)$) and a subset $Q \subset V$, $|Q| = p$, the link region $\mathcal{R}(Q)$ of Q is defined as*

$$\mathcal{R}(Q) := \mathrm{conv}_Q(A) \backslash \left(\bigcup_{r=0}^{p-1} E_r(Q) \right), \tag{4.10}$$

where

$$\mathrm{conv}_Q(A) := \mathrm{conv}(A \backslash \{a : (a,1) \in Q\})$$

and the regions $E_r(Q)$, $0 \leqslant r \leqslant p$, are given by

$$E_r(Q) := \bigcup_{X \in \mathcal{E}_r(Q)} \operatorname{conv}(X^0), \tag{4.11}$$

$$\mathcal{E}_r(Q) := \left\{(X,+) \in \mathcal{C}_r^* : X^0 \cap Q = \varnothing,\, X^+ \subseteq Q\right\}. \tag{4.12}$$

In two dimensions, the above defined link region coincides with the interior of a vertex link as used in [9–11]. However, the definition (4.10) is more straightforward and more general, and it can be used to obtain more general spline bases and generalize the algorithm to higher dimensions, allowing to easily prove some important properties, as we do presently.

Theorem 4.11. *The following holds:*

(i) Each region $E_r(Q)$ is triangulated by $\{\operatorname{conv}(X^0) : X \in \mathcal{E}_r(Q)\}$;

(ii) The regions $E_r(Q)$ are all disjoint and they cover $\operatorname{conv}_Q(A)$;

(iii) The union of all simplices $\{\operatorname{conv}(X^0) : X \in \mathcal{E}_r(Q)\}$ for $r = 0, \dots, p$ triangulates $\operatorname{conv}_Q(A)$;

(iv) The simplices $\{\operatorname{conv}(X^0) : X \in \mathcal{E}_p(Q)\}$ triangulate $E_p(Q) = \mathcal{R}(Q)$.

Proof. First, notice that (iii) implies both (i) and (ii), since it is clear from (4.12) that $\mathcal{E}_r(Q) \cap \mathcal{E}_s(Q) = \varnothing$ if $r \neq s$. Therefore, the triangulation of $\operatorname{conv}_Q(A)$ decomposes into disjoint triangulations of the subregions $E_r(Q)$, $r = 0, \dots, p$.

For any $B \subset V$, $|B| = d+1$, let $\mathbf{1}_B(x) := \mathbf{1}_{\operatorname{conv}(B)}(x)$, $x \in \mathbb{R}^d$ denote the indicator function of the simplex $\operatorname{conv}(B)$. Summing the indicator function $\mathbf{1}_{X^0}(x)$ over all cocircuits $(X,+) \in \mathcal{C}^*$ corresponds to summing over all the tiles Z_X of the corresponding fine zonotopal tiling $\mathcal{P}$ of $Z(V)$. Applying (2.10) to the subset Q and selecting the tiles in $\mathcal{P}_Q$ of order zero gives:

$$\sum_{r=0}^{p} \sum_{(X,+) \in \mathcal{E}_r(Q)} \mathbf{1}_{X^0}(x) = \sum_{\substack{Z_X \in \mathcal{P}_Q \\ X^+ = \varnothing}} \mathbf{1}_{X^0}(x).$$

The sum on the right hand side is over all the tiles of order zero in $\mathcal{P}_Q$, i.e., over a triangulation of $\operatorname{conv}_Q(A)$ by Proposition 4.6. Therefore, the sum itself is just the indicator function of $\operatorname{conv}_Q(A)$. Since we are summing over indicator functions, this proves that the simplices that appear on the left exactly triangulate $\operatorname{conv}_Q(A)$, hence proving (iii).

Finally, after separating on the left hand side the terms $r = p$ and $r < p$ and rearranging, we obtain:

$$\sum_{(X,+) \in \mathcal{E}_p(Q)} \mathbf{1}_{X^0}(x) = \sum_{\substack{Z_X \in \mathcal{P}_Q \\ X^+ = \varnothing}} \mathbf{1}_{X^0}(x) - \sum_{r=0}^{p-1} \sum_{(X,+) \in \mathcal{E}_r(Q)} \mathbf{1}_{X^0}(x)$$

Since all the simplices in the second sum on the right hand side have pairwise disjoint interiors, the whole right hand side is simply the indicator function of $\mathcal{R}(Q)$ as defined in (4.10). This implies property (iv), completing the proof. □

Corollary 4.12. *$\mathcal{R}(Q)$ is empty if and only if Q is not equal to the positive-sign (interior knots) subset X^+ for any tile Z_X in $\mathcal{P}$.*

Proof. Simply notice that $\mathcal{E}_p(Q) = \{(X,+) \in \mathcal{C}^* : X^+ = Q\}$. By Theorem 4.11, and due to the fact that the simplex $\mathrm{conv}(X^0)$ is non-degenerate for any cocircuit $(X,+)$ (Lemma 2.7), the region $E_p(Q) = \mathcal{R}(Q)$ is empty if and only if its triangulation contains no simplices, i.e., if and only if $\mathcal{E}_p(Q)$ is empty. □

Remark 4.13. *Based on these facts, we could replace the definition (4.10) of the link region of Q, $|Q| = p$, with $\mathcal{R}(Q) := E_p(Q)$. However, in a constructive algorithm, this definition cannot be used to compute the link regions of order p based only on the tiles of order $r < p$. Therefore, from an algorithmic standpoint, we prefer Definition 4.10.*

An example of link region, and its relation to the regions (4.11), is shown in Figure 3.

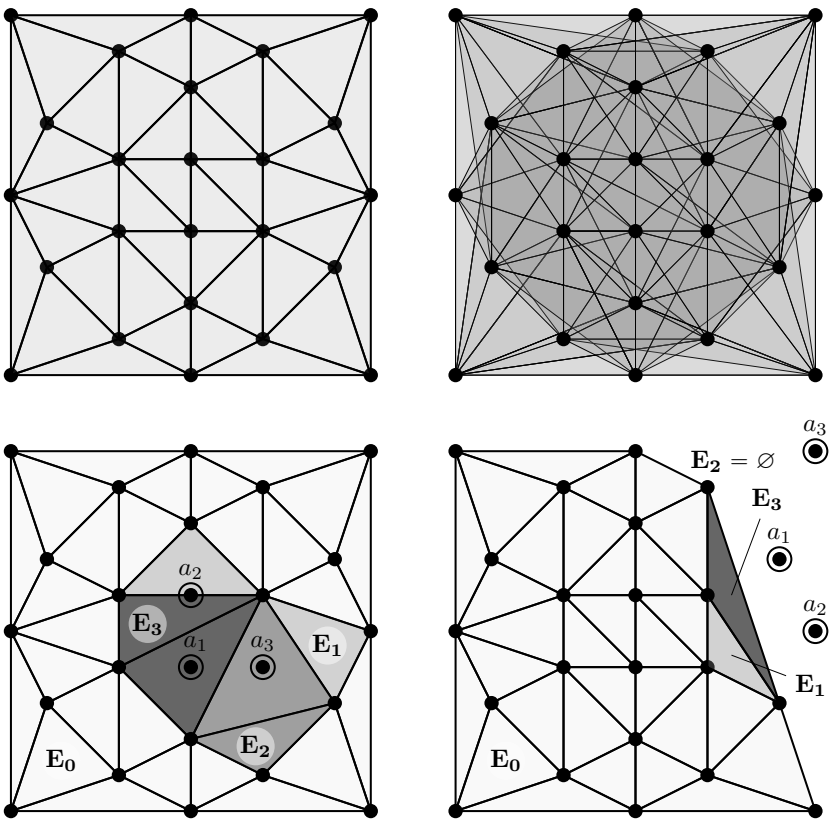

Figure 3: Example of basis obtained via the process outlined in Proposition 4.14. *Top left*: a set of points $A \subset \mathbb{R}^2$ not in general position and a possible triangulation corresponding to the splines associated to $\mathcal{C}_0^*$. *Top right*: the simplices $\mathrm{aff}(X^0)$ associated to all the splines of order $p = 2$; the shading indicates the number of simplices covering each point. *Bottom*: the regions $E_r(Q)$ of (4.11) for two possible choices of subsets $Q := \{a_1, a_2, a_3\}$. The zero sets X^0 of the splines having $X^+ = Q$ triangulate E_3.

Theorem 4.11 and Corollary 4.12 together imply that any fine zonotopal tiling $\mathcal{P}$ of $Z(V)$, and therefore any single-element lifting $\widetilde{\mathcal{M}(V)}$ as well as the associated spline basis, can be obtained iteratively by triangulating the link region associated to each positive subset through some choice

of triangulation, similarly to Liu and Snoeyink's algorithm in two dimensions. This statement is made precise by Proposition 4.14, which we can now prove.

Proposition 4.14. *There exists a choice of triangulations $\mathcal{T}_Q$, one for every link region $\mathcal{R}(Q)$ associated to each positive cocircuit $\widehat{X} := (X, +)$, $Q := X^+$, such that $\widehat{\mathcal{M}(V)}$ (and its associated spline basis) can be constructed as follows:*

(i) Let $\mathcal{X}_0^+ = \{\varnothing\}$;

(ii) For every $0 \leqslant p \leqslant |A| - d - 1$ and for every $Q \in \mathcal{X}_p^+$, let $\mathcal{R}(Q)$ be the link region (4.10), and let $\mathcal{T}_Q$ be its triangulation. Let the union of all the cocircuits

$$\mathcal{C}_p^*(Q) := \{(X, +) : X^+ = Q,\ X^0 = T\}$$

for all $Q \in \mathcal{X}_p^+$ and every simplex T in $\mathcal{T}_Q$ with vertices $T = \{a_1, \dots, a_{d+1}\}$ be the set of positive cocircuits of order p of $\widehat{\mathcal{M}(V)}$;

(iii) Let

$$\mathcal{X}_{p+1}^+ = \{X^+ \sqcup \{u\} : (X, +) \in \mathcal{C}_p^*,\ u \in X^0,\ \mathcal{R}(X^+ \sqcup \{u\}) \neq \varnothing\} \tag{4.13}$$

be the set of all the possible subsets X^+ of positive cocircuits of order $p + 1$;

(iv) Repeat steps (ii) and (iii) until $\mathcal{X}_p^+ = \varnothing$.

Proof. Property (iv) of Theorem 4.11 directly states that every tile of order p in the tiling $\mathcal{P}$ (i.e., every spline configuration of degree p) with a given set of interior points X^+ can be obtained by triangulating the corresponding link region $\mathcal{R}(X^+)$, and, due to Corollary 4.12, all the tiles of order p that appear in the tiling have a nonempty link region, which is always triangulable since Theorem 4.11 exhibits one such triangulation. All that is left is to determine the sets X^+ for all positive cocircuits $\widehat{X}$ of $\widehat{\mathcal{M}(V)}$.

Notice that $Q \in \mathcal{X}_0^+$ implies $Q = \varnothing$, and $\mathcal{R}(\varnothing) = \operatorname{conv}(A)$. Therefore, the positive cocircuits with order $p = 0$ (i.e., the spline functions of order 0) can be obtained by building a triangulation of $\operatorname{conv}(A)$, in accordance with Proposition 4.6.

Assume that we have computed all the positive cocircuits of order $p - 1$, and we want to determine the set $\mathcal{X}_p^+$ of interior knots of order p. Let $Q = Y^+$ for some cocircuit $\widehat{Y} := (Y, +)$ of order p. We can always choose $\widehat{Y}$ and a vector $v \in Y^0$ such that $(d-1)$-dimensional face $F := \operatorname{conv}(Y^0 \backslash \{v\})$ is on the boundary of $\mathcal{R}(Q)$, in which case there is no cocircuit $(X, +)$ such that $X_{u,-} = Y_{v,-}$. Furthermore, if there exists a cocircuit $(R, 0)$ with $R = Y_{v,-}$, then v is separated from all points in Y^+ by F. But this cannot happen for all the faces F on the boundary of a bounded region such as $\mathcal{R}(Q)$. Therefore, there must exist a cocircuit X of order $p - 1$ such that $X_{u,+} = Y_{v,-}$ and therefore $X^+ \sqcup \{u\} = Q$. We conclude that

$$\mathcal{X}_p^+ \subseteq \{X^+ \sqcup \{u\} : (X, +) \in \mathcal{C}_{p-1}^*, u \in X^0\}.$$

After filtering out the sets $X^+ \sqcup \{u\}$ with an empty link region, we are left exactly with all the possible interior sets of order p (4.13). The cocircuits corresponding to each interior set $Q \in \mathcal{X}_p^+$ can then be obtained by triangulating the corresponding link region.

Finally, when $p := |Q| = |A| - d$, the set $\operatorname{conv}_Q(A)$ only contains d points, and therefore the link region $\mathcal{R}(Q)$ has an empty interior. Therefore, $\mathcal{X}_p^+ = \mathcal{X}_{|A|-d}^+ = \varnothing$, and the process stops. □

This construction is essentially the same as Liu and Snoeyink's algorithm in two dimensions [10], after replacing the definition of vertex link with the link region $\mathcal{R}(Q)$ defined by (4.10). Notice, however, that for every lifting $\widehat{\mathcal{M}(V)}$ the triangulation that should be used on each subset Q is prescribed, and there is no guarantee that, for an arbitrary choice of triangulations, the procedure in Proposition 4.14 always produces a basis, or even that the link regions are always triangulable. This is particularly troubling if we wish to extend the algorithm beyond two dimensions, since in $d \geqslant 3$ there are non-self-intersecting polytopal regions that are non-triangulable. This problem is equivalent, using the language of [52], to the determination of a set of centroid triangulations on the intersection $Z(V) \cap H_k$ which are *lifting*, i.e., they come from the same tiling $\mathcal{P}$ of $Z(V)$, which is a known open problem. We do not tackle the problem in its full generality here. Instead, in the next section we propose a particular choice that is guaranteed to make the procedure outlined in Proposition (4.14) always possible.

To conclude this section, we provide a characterization of the set of simplices

$$\mathcal{S}_p := \{\mathrm{conv}(X^0) : (X,+) \in \mathcal{C}_p^*\},\ 0 \leqslant p \leqslant |A| - d - 1.$$

The intersection of these simplices define the zones where all the spline functions are pure polynomials, and their boundaries define the zones of reduced regularity of spline functions, i.e., knots in $d = 1$, knot lines in $d = 2$ and more generally knot hypersurfaces in $d > 2$.

Proposition 4.15. *The simplices in $\mathcal{S}_p$ cover $\binom{p+d}{d}$ times the set $\mathrm{conv}_p(A)$.*

Proof. By induction over p. The simplices in $\mathcal{S}_0$ form a triangulation of $\mathrm{conv}(A)$ by Proposition 4.6, and therefore cover it exactly once. Assume now that the proposition is true for every order $r < p$. By Property (iii) of Theorem 4.11, for any subset $Q \subset V$ with $|Q| = p$, the simplices $\{\mathrm{conv}(X^0) : (X,+) \in \mathcal{E}_r(Q),\ r \leqslant p\}$ triangulate $\mathrm{conv}_Q(A)$, i.e.,

$$\sum_{r=0}^{p} \sum_{(X,+)\in\mathcal{E}_r(Q)} \mathbf{1}_{X^0} = \mathbf{1}_{\mathrm{conv}_Q(A)}$$

We sum this expression over all the subsets $Q \in \binom{V}{p}$. Each cocircuit $(X,+) \in \mathcal{C}_r^*$ appears in the sum whenever $X^+ \sqcup B = Q$ for some subset $B \subset V$, $|B| = p - r$, but $Q \backslash X^+ \cap X^0 = \varnothing$. Therefore, the occurrences of a cocircuit of $\mathcal{C}_r^*$ in the sum correspond to the occurrences of the $|Q\backslash X^+| = p - r$ vectors in the $|X^-| = n - r - d - 1$ available positions. We obtain

$$\sum_{(X,+)\in\mathcal{C}_p^*} \mathbf{1}_{X^0} + \sum_{r=0}^{p-1} \binom{n-r-d-1}{p-r} \sum_{(X,+)\in\mathcal{C}_r^*} \mathbf{1}_{X^0} = \sum_{Q\in\binom{V}{p}} \mathbf{1}_{\mathrm{conv}_Q(A)}. \tag{4.14}$$

By induction, the sum of the indicator functions over the cocircuits in $\mathcal{C}_r^*$ covers $\mathrm{conv}_r(A) \supseteq \mathrm{conv}_p(A)$ exactly $\binom{r+d}{d}$ times, and the sum on the right covers $\mathrm{conv}_p(A)$ exactly $\binom{n}{p}$ times. Using multiset notation and the Vandermonde identity, we can derive

$$\begin{aligned}\sum_{r=0}^{p} \binom{n-r-d-1}{p-r}\binom{r+d}{r} &= \sum_{r=0}^{p} \left(\!\!\binom{n-p-d}{p-r}\!\!\right)\left(\!\!\binom{d+1}{r}\!\!\right) \\ &= \left(\!\!\binom{n-p+1}{p}\!\!\right) = \binom{n}{p}.\end{aligned} \tag{4.15}$$

Separating the term with $r = p$ in the first sum in (4.15), we conclude that the first term in (4.14), i.e. the set of all simplices in $\mathcal{S}_p$, must cover $\binom{p+d}{d}$ times the region $\mathrm{conv}_p(A)$. □

Notice that in general it is not possible to extract from the set $\mathcal{S}_p$ a collection of $\binom{p+d}{d}$ independent triangulations: the $\binom{p+d}{d}$-fold cover of $\mathrm{conv}_p(A)$ is in general a *branched cover*. In practical cases, the simplices in $\mathcal{S}_p$ form a complex web of faces that subdivides the domain into many cells of arbitrary shape and sometimes almost degenerate geometry, see e.g. Figure 3.

5 Weighted Delaunay bases

In the previous section, we have investigated spline bases associated to single-element liftings in a general way. These bases exist in all dimensions and can accomodate the most general multisets of points. We have shown two important properties that are shared by all such bases, namely that they are all polynomial-reproducing (Theorem 4.7), and that they can all be built using an iterative triangulation algorithm, similar to that already proposed in the literature in the bivariate case [9–11] (Proposition 4.14). However, no practical construction algorithm can be directly deduced from the previous section's results, as in order to apply Proposition 4.14 one would have to know in advance which triangulation to apply on each link region. Furthermore, many practical algorithms that are less important from a theoretical point of view but nonetheless fundamental for applications have not been addressed so far. We speculate that finding many algorithms, such as recursive spline evaluation, in the full generality of the previous section might constitute a formidable task. We base our speculation on the somewhat similar challenges faced in the study of triangulations, where the scope is often limited to a certain sub-class of *regular* constructions in order to approach constructive issues such as the connectivity of flip graphs [53].

For these reasons, in this section, we focus on one particular subset of spline bases induced by single-element liftings, namely those obtained via Proposition 4.14 by choosing for each link region $\mathcal{R}(Q)$ the same (weighted) Delaunay triangulation. We call these bases, which constitute a direct generalization of Neamtu's Delaunay configurations, *weighted Delaunay* bases.

It is well known any weighted Delaunay triangulation of a set of points in $\mathbb{R}^d$ can be obtained by lifting every point into $\mathbb{R}^{d+1}$ using a suitable height function $h : A \mapsto \mathbb{R}$ as the additional coordinate, computing the lower convex hull of the lifted points, and projecting back to $\mathbb{R}^d$ [53]. Hyperplane arrangements on the lifted point cloud then lead to the definition of oriented matroids (and associated zonotopal tilings) which have been tied to order-k Delaunay (and dual Voronoi) configurations in previous works [54–56]. Specifically, [54] shows that any weighted Delaunay triangulation gives rise to a *realizable* oriented matroid, called *Delaunay Oriented Matroid*, or DOM. In Section 5.3 we use a similar approach to define weighted Delaunay bases over a point multiset A (Theorem 5.2), proving that choosing the (same) weighted Delaunay triangulation at each step in Proposition 4.14 always yields a valid single-element lifting of the configuration matroid of A, and thus a valid spline basis for every order $0 \leqslant p \leqslant |A| - d - 1$. More precisely, we prove in Section 5.3 the following theorem.

Theorem 5.2. *If for every set Q we let $\mathcal{T}_Q$ be the weighted Delaunay triangulation of* $\mathrm{conv}_Q(A)$ *with generic height function h, the procedure outlined in Proposition 4.14 always produces a single-element lifting, that we denote $\mathcal{D}_h$. Furthermore, the positive cocircuits $\widehat{X} := (X, +)$ of $\mathcal{D}_h$ are realizable, i.e., they can be represented as hyperplanes in an arrangement on $\tilde{A}$.*

In the statement of Theorem 5.2, $\tilde{A}$ is a lifting of A in $\mathbb{R}^d$ via the height function h that we will define more precisely in Section 5.3. If we consider the case of a two-dimensional set of points A in general position and without repetitions, weighted Delaunay bases represent a *restriction* of Liu and Snoeyink's algorithm, since they limit the generality of the triangulation that can be used at each step. On the other hand, weighted Delaunay bases allow to consider any point multiset, including repetitions and affine dependencies, and they are general enough to allow the freedom to insert points in the interior of the link region, a possibility that seems implicitly excluded in Liu and Snoeyink's approach. Moreover, our results apply to any space dimensionality, going beyond the limitation $d \leqslant 2$. We believe that this result is quite remarkable, as link regions are not always convex, and there is therefore no *a priori* guarantee that they are triangulable in all cases. It is likely that a proof of this fact in a more general case, i.e., beyond weighted Delaunay bases, might be much more challenging.

Theorem 5.2 also states that the cocircuits obtained via the weighted Delaunay lifting are *realizable*, i.e., they correspond to a set of planes in the lifting space $\mathbb{R}^{d+1}$. This is not at all unexpected since similar constructions exhibit the same behavior [54]. However, this realizability is very useful in applications, and we exploit it in both Section 5.2 and Section 5.3 to provide some useful algorithms for the evaluation of spline functions in the basis.

More specifically, we prove in Section 5.2 that, given a general enough point $x \in \mathbb{R}^d$, the positive cocircuit graph $\mathcal{G}_+$ can be given a x-dependent orientation o_x under which it becomes acyclic (Lemma 5.5). After finding the (unique) positive cocircuit $\widehat{Z} \in \mathcal{C}_0^*$ whose associated degree-zero spline $M(\,\cdot\mid \widehat{Z})$ is supported on x, all the positive cocircuits corresponding to splines supported on x can be reached from $\widehat{Z}$ via the oriented graph $(\mathcal{G}_+, o_x)$, as we prove in Section 5.2:

Proposition 5.8. *Let $\mathcal{D}_h$ be weighted a Delaunay lifting with generic height function h, and let $\widehat{Y} := (Y, +)$ be a positive cocircuit of $\mathcal{D}_h$ such that $x \in \operatorname{conv}(Y^0 \sqcup Y^+)$. Then there is a directed path in $(\mathcal{G}_+, o_x)$ from $\widehat{Z}$ to $\widehat{Y}$.*

Thus, simply by computing a topological sorting on $(\mathcal{G}_+, o_x)$, we obtain an algorithm that yields all the spline functions supported on x (Algorithm 2). Notice that some splines that are not supported on x are reached by the algorithm, and thus some explicit checks are still needed. These checks are lifted in Section 5.3 by using a related construction containing some auxiliary functions.

Finally, in Section 5.3 we tackle the problem of evaluating all the spline functions in the basis on a given point $x \in \mathbb{R}^d$. As noted in previous literature [10, 27, 28, 43], in order to evaluate all the basis splines of order p via (2.2b), the knowledge of the spline functions of orders $p' < p$ is not sufficient, and the introduction of auxiliary functions is inevitable. In Section 5.3 we show that a family of auxiliary functions can be obtained by considering, for each spline function of the basis, a suitable oriented sub-matroid. Merging all the spline functions thus obtained and removing duplicates then yields a sufficient set of auxiliary functions, completing the evaluation graph. Theorem 2.6 guarantees the existence of such a sub-matroid, and the realizability implicit in Theorem 5.2 allows to compute the spline functions corresponding to the cocircuits of the sub-matroid very efficiently, without having to construct the full oriented matroid first, as we show in Section 5.3. Put together, these two facts allow us to propose a method to compute auxiliary functions (Algorithm 3), and to evaluate all the spline functions in a basis at a given point (Algorithm 4).

5.1 Construction

Let $A = \{a_1, \dots, a_n\}$ be a multiset of points and $h : a \mapsto h(a) \in \mathbb{R}$ be a *height function* over A. Let $\mathcal{T}$ be a set of simplices that triangulate $\mathrm{conv}(A)$ with vertices in A. For every simplex T in $\mathcal{T}$, order its vertices $T = \{a_1, \dots, a_{d+1}\}$ so that $\det((a_1, 1), \dots, (a_n, 1)) > 0$. If, for every $b \in A \backslash T$,

$$\det((a_1, h(a_1), 1), \dots, (a_{d+1}, h(a_{d+1}), 1), (b, h(b), 1)) < 0, \tag{5.1}$$

then the triangulation $\mathcal{T}$ is called a *weighted Delaunay triangulation* with height function h. If the points of A are in general position, plugging $h(a) = \|a\|^2$ in (5.1) yields the usual Delaunay triangulation, see e.g. [57].

A bit of care is needed when choosing the height function h.

Definition 5.1. *A height function h is said to be* generic *if, given the lifted point cloud*

$$\tilde{A} := \{(a, h(a)),\, a \in A\} \subset \mathbb{R}^{d+1},$$

the only affinely dependent subsets of $d+2$ points in $\tilde{A}$ lie on a vertical plane, i.e., a plane whose normal $N \in \mathbb{R}^{d+1}$ satisfies $N_{d+1} = 0$.

Notice that affinely dependent subsets are indeed allowed on vertical planes, and thus the point multiset A can be kept as generic as possible, with possible repetitions. If h is generic, then the determinant in (5.1) is always nonzero, and the weighted Delaunay triangulation is unique. Hereafter, we will only consider generic height functions. We now can use (5.1) to specialize Proposition 4.14 to (weighted) Delaunay oriented matroids and prove Theorem 5.2.

Theorem 5.2. *If for every set Q we let $\mathcal{T}_Q$ be the weighted Delaunay triangulation of $\mathrm{conv}_Q(A)$ with generic height function h, the procedure outlined in Proposition 4.14 always produces a single-element lifting, that we denote $\mathcal{D}_h$. Furthermore, the positive cocircuits $\widehat{X} := (X, +)$ of $\mathcal{D}_h$ are realizable, i.e., they can be represented as hyperplanes in an arrangement on $\tilde{A}$.*

Proof. Easy to prove using the lifting property (5.1). See also [54] for similar arguments and an interesting generalization.

Let $\tilde{A} = \{(a, h(a)),\, a \in A\} \subset \mathbb{R}^{d+1}$ be the point cloud lifted by h. We define the oriented matroid $\mathcal{D}_h$ similarly to (2.5) as the set of sign vectors of oriented hyperplanes on $\tilde{A}$, but adding the sign of the $(d+1)$-th component of the hyperplane normal as the last component, i.e.,

$$\mathcal{D}_h := \{(\mathrm{sign}\left(\langle y, (a, h(a), 1)\rangle\right)_{a \in A}, \mathrm{sign}(y_{d+1})),\, y \in \mathbb{R}^{d+2}\}. \tag{5.2}$$

Properties (P1)–(P4) are trivial to check directly for $\mathcal{D}_h$, with the same reasoning used in Section 2.3 for hyperplane arrangements. An alternative, more elegant proof that $\mathcal{D}_h$ is an oriented matroid can be constructed similarly to [54] by adding a point at infinity to compactify $\mathbb{R}^{d+1}$ and then checking that $\mathcal{D}_h$ corresponds to a set of sphere arrangements.

Clearly, hyperplanes in $\mathbb{R}^d$ are in bijection with vertical hyperplanes in $\mathbb{R}^{d+1}$, so that $\mathcal{D}_h$ is indeed a single-element lifting of $\mathcal{M}(V)$. Furthermore, since the height function is generic, positive cocircuits of $\mathcal{D}_h$ have exactly $d+1$ zeros, and $\mathcal{D}_h$ is a simplicial lifting. Positive cocircuits are then represented as oriented hyperplanes in $\mathbb{R}^{d+1}$ with a normal $N \in \mathbb{R}^{d+1}$ having $N_{d+1} > 0$.

All that is left to prove is that each link region $\mathcal{R}(\mathcal{X}^+)$ is triangulated by a weighted Delaunay triangulation with height function h. But this is easy to prove. For a positive cocircuit $\widehat{X} :=$

$(X,+)$ of $\mathcal{D}_h$, consider the associated oriented hyperplane $H := \mathrm{aff}(\{(u,h(u)), u \in X^0\})$, and order the points in X^0 so that every point $(a,h(a)) \in \mathbb{R}^{d+1}$ is on the positive (negative) side of H if the following determinant is positive (resp. negative):

$$\det((u,h(u),1)_{u\in X^0},(a,h(a),1)). \tag{5.3}$$

Notice that, with this choice of orientation, the condition $N_{d+1} > 0$ translates to $\det((u,1)_{u\in X^0}) > 0$. By definition of the cocircuit, the determinant (5.3) is positive for all points $(a,h(a))$ such that $(a,1) \in X^+$, and negative for points $(a,h(a))$ such that $(a,1) \in X^-$. But only the second set of points appears in the link region $\mathcal{R}(X^+)$, as can be seen from its definition (4.10). Therefore, the weighted Delaunay condition (5.1) is satisfied for all the points in $\mathcal{R}(X^+)$, which completes the proof of the theorem. □

First and foremost, Proposition 4.14 and Theorem 5.2 imply that Liu and Snoeyink's algorithm [9–11] can be used to produce spline bases, over any point multiset and in arbitrary dimension, provided that we adopt (4.10) as the definition of the link region and as long as we restrict the algorithm to always use the same weighted Delaunay triangulation at each step. In this case, the triangulatbility of every link region is guaranteed, and the algorithm is proven to converge and to produce spline bases in all space dimensions and at all possible orders.

Furthermore, since the height function h is rather arbitrary, there is still quite a large amount of freedom in the type of spline bases that can be obtained. For example, modifying the height function appropriately can lead to bases with some degree of anisotropy, which might be useful in simulation applications where the physical properties are not isotropic. As another example, it is possible to triangulate link regions using some additional internal constrained points, simply by introducing repeated points in A with heights differing by a sufficiently small amount. This freedom can be used to build spline bases with reduced regularity, analogously to the classic one-dimensional case. A possible construction that achieves this result, close to Liu and Snoeyink's approach, is presented in Algorithm 1.

5.2 Splines supported on x

In this subsection and the next one, we wish to show that the spline bases associated to the Delaunay lifting $\mathcal{D}_h$ posses a natural evaluation graph, not too dissimilar from the usual pyramidal scheme of one-dimensional B-spline bases.

The first step to build an evaluation scheme is to determine, for a point $x \in \mathbb{R}^d$, all the spline functions of the basis up to a given order p that are supported on x. This is equivalent, by (4.1), to finding all cocircuits $(X,+)$ such that $x \in \mathrm{conv}(X^0 \sqcup X^+)$. In this case, by extension, we say that the cocircuit $\widehat{X}$ is supported on x.

For spline functions of degree 0, the task is particularly simple. In fact, since the simplices $\mathcal{S}_0$ triangulate $\mathrm{conv}(A)$ (Proposition 4.6), whenever $x \in \mathrm{conv}(A)$ there is one and only one cocircuit $\widehat{Z}$ such that $Z^+ = \varnothing$ and $\widehat{Z}$ is supported on x. Computationally, $\widehat{Z}$ can be found efficiently via single point location query on a triangulation, for which many efficient algorithms exist, see e.g. [58, 59]. We prove in this section that all the other cocircuits $\widehat{Y}$ supported on x can be found from $\widehat{Z}$ using a suitable orientation, induced by x, of the positive cocirucit graph $\mathcal{G}_+$ of $\widehat{\mathcal{M}(V)}$, i.e., the simple, connected graph having the positive cocircuits as vertices and the positive colines as edges.

Algorithm 1 Builds a basis of simplex spline functions on A for all orders $1\dots,p$, using a weighted Delaunay triangulation.

Input:

A multiset of points in $\mathbb{R}^d$, with possible repetitions.

h generic height function.

p order of the highest basis to be computed.

Output:

$\mathcal{C}_q^*$ positive cocircuits of the Delaunay lifting $\mathcal{D}_h$ with height function h, for $q = 0,\dots,p$.

Assumptions: all triangulations are weighted Delaunay triangulations with the same general height function h. $E_r(Q)$ automatically created when needed.

procedure BuildDelaunaySplineBasis(A)
  $\mathcal{C}_q^* \leftarrow \varnothing$, $\mathcal{X}_q^+ \leftarrow \varnothing$ for $q = 0,\dots,p$.
  $\mathcal{S}_0 \leftarrow$ triangulation of $\mathrm{conv}(A)$ with height function h.
  for all simplices Σ in $\mathcal{S}_0$ **do**
    Add to $\mathcal{C}_0^*$ a cocircuit $\widehat{X}$ with $X^0 = \Sigma$ and $X^+ = \varnothing$.
  for all points p in $\mathcal{S}_0$ **do**
    Add $(p,1)$ to $\mathcal{X}_1^+$.
    Add all the simplices in $\mathcal{S}_0$ that do not use p to $E_0(\{(p,1)\})$.
  for q=1,...,p **do**
    for all $Q \in \mathcal{X}_q^+$ **do**
      Compute $\mathrm{conv}_Q(A)$.
      Compute $\mathcal{R}(Q)$ via (4.10).
      $\mathcal{I} \leftarrow$ points $p \in A$, $p \notin Q$ at same location as some point in Q.
      $\mathcal{S}_Q \leftarrow$ triangulation of $\mathcal{R}(Q)$ h and extra constrained points $\mathcal{I}$.
      for all simplices Σ in $\mathcal{S}_Q$ **do**
        Add a cocircuit $\widehat{X}$ with $X^+ = Q$, $X^0 = \Sigma$ to $\mathcal{C}_q^*$.
        for all $u \in X^0$ **do**
          Add $Q \sqcup \{u\}$ to $\mathcal{X}_{q+1}^+$ if not already present.
        Add Σ to $E_q(Q')$ for all $Q' = Q \sqcup \{v\}$, $v \notin \Sigma$ if not already present.
  return $\{\mathcal{C}_0^*,\dots,\mathcal{C}_p^*\}$.

For every ordered, linearly independent subset $Z \subset V$, $|Z| = d$, define the linear functional

$$\varphi_Z(v) := \det(Z \sqcup \{v\}), \tag{5.4}$$

so that $\operatorname{sign}(\varphi_Z(v))$ identifies the side of $\operatorname{aff}(Z)$ on which v lies. For a covector $\widehat{X} := (X, +)$, define its *weight* relative to Z as

$$w(\widehat{X} \mid Z) := \sum_{u \in X^+} \operatorname{sign}(\varphi_Z(u)) + \frac{1}{2} \sum_{v \in X^0} \operatorname{sign}(\varphi_Z(v)), \tag{5.5}$$

which measures the balance between the points of X on either side of $\operatorname{aff}(Z)$, with zero vectors counting only half. If we consider the two positive cocircuits $\widehat{X} := (X, +)$ and $\widehat{Y} := (Y, +)$ separated by $\widehat{L} := (L, +)$, i.e., whose corresponding tiles Z_X and Z_Y in $\mathcal{P}$ are adjacent and separated by $Z_L = Z_X \cap Z_Y$, we have the following two properties.

Lemma 5.3. *The weights of $\widehat{X}$ and $\widehat{Y}$ with respect to L^0 differ by 1, i.e.,*

$$\left| w(\widehat{X} \mid L^0) - w(\widehat{Y} \mid L^0) \right| = 1.$$

Proof. By Proposition 4.4, without loss of generality, there exist two vectors $u \in X^0$, $v \in Y^0$ such that either $X_{u,-} = Y_{v,-}$, $X_{u,+} = Y_{v,+}$ or $X_{u,-} = Y_{v,+}$. In the first two cases, X and Y differ on two vectors on opposite sides of $\operatorname{aff}(L^0)$. Exchanging a 0 with a $+$ or a $-$ increases or decreases the weight by $\frac{1}{2}$, and since the same operation is performed on opposite sides of $\operatorname{aff}(L^0)$ for X and Y, by (5.5) the difference of the weights of $\widehat{X}$ and $\widehat{Y}$ must be exactly 1. In the third case, the change occurs on the same side of $\operatorname{aff}(L^0)$, but since one cocircuit exchanges 0 for $+$ and the other 0 for $-$, the weight difference again must be exactly 1. □

Lemma 5.4. *Let $N_{L^0} \in \mathbb{R}^{d+1}$ be the dual vector to the linear functional φ_{L^0} defined in (5.4),*

$$\varphi_{L^0}(y) = \langle y, N_{L^0} \rangle \text{ for all } y \in \mathbb{R}^{d+1}. \tag{5.6}$$

Then whenever $w(\widehat{Y} \mid L^0) > w(\widehat{X} \mid L^0)$, N_{L^0} is an outward normal vector for the tile Z_X and an inward normal vector for the tile Z_Y, associated to their common face.

Proof. The face shared by Z_X and Z_Y is given by $Z_L = Z_X \cap Z_Y = \sum_{u \in L^+} u + \sum_{v \in L^0} [0, v]$. The difference $z_1 - z_2$ between two points $z_1, z_2 \in Z_L$ can be expressed as a linear combination of the vectors in L^0 and thus $\langle z_1 - z_2, N_{L^0} \rangle = 0$, so N_{L^0} is indeed a $(d+1)$-dimensional vector normal to the face Z_L. For each tile Z_X, we consider the point

$$b_X := \sum_{u \in X^+} u + \frac{1}{2} \sum_{v \in X^0} v, \tag{5.7}$$

which by (2.8) is always contained in Z_X, and similarly for Z_Y. Since Z_X and Z_Y are convex polytopes separated by a shared face, in order to determine the direction of N_{L^0} it is sufficient to show that

$$\operatorname{sign}(\langle b_Y - b_X, N_{L^0} \rangle) = \operatorname{sign}(\varphi_{L^0}(b_Y - b_X)) = w(\widehat{Y} \mid L^0) - w(\widehat{X} \mid L^0). \tag{5.8}$$

We do so by enumerating the possibilities via Proposition 4.4. It can easily be checked that, in the four cases $X_{u,\sigma_1} = Y_{v,\sigma_2}$, σ_1, $\sigma_2 \in \{-,+\}$, we have

$$b_Y - b_X = \frac{1}{2}\left(\sigma_1 u - \sigma_2 v\right). \tag{5.9}$$

According to (5.5) we also have

$$w(\widehat{Y} \mid L^0) - w(\widehat{X} \mid L^0) = \frac{1}{2}\left(\sigma_1 \mathrm{sign}(\varphi_{L^0}(u)) - \sigma_2 \mathrm{sign}(\varphi_{L^0}(v))\right). \tag{5.10}$$

Since Proposition 4.4 guarantees that u and v are on the same side of $\mathrm{aff}(L^0)$, i.e., $\mathrm{sign}(\varphi_{L^0}(u)) = \mathrm{sign}(\varphi_{L^0}(v))$, if and only if $\sigma_1 \neq \sigma_2$, both terms on the right hand side of (5.10) have the same sign, and we can write

$$\frac{1}{2}\left(\sigma_1 \mathrm{sign}\left(\varphi_{L^0}(u)\right) - \sigma_2 \mathrm{sign}\left(\varphi_{L^0}(v)\right)\right) = \mathrm{sign}\left(\frac{1}{2}\left(\sigma_1 \varphi_{L^0}(u) - \sigma_2 \varphi_{L^0}(v)\right)\right),$$

which implies (5.8) via (5.9) and (5.10), completing the proof. □

We assume hereafter that we are given a test point $x \in \mathbb{R}^d$, on which we wish to find all supported spline functions. We can use the point x to induce an orientation on the graph $\mathcal{G}_+$, provided that x respects the following condition

$$x \notin \mathrm{aff}(L^0) \text{ for all colines } (L,+) \text{ of } \widehat{\mathcal{M}(V)}. \tag{5.11}$$

Using the weights w defined in (5.5), we define the orientation $o_x(\widehat{L})$ of the coline $\widehat{L} := (L,+)$ as

$$o_x(\widehat{L}) = \widehat{X} \to \widehat{Y} \iff \mathrm{sign}\left(\varphi_{L^0}(x,1)\right) = w(\widehat{Y} \mid L^0) - w(\widehat{X} \mid L^0), \tag{5.12}$$

where $\widehat{X}$ and $\widehat{Y}$ are the two cocircuits connected by $\widehat{L}$. We alternatively use the more compact notation $\widehat{X} \xrightarrow{\widehat{L}} \widehat{Y}$ to the same effect. Loosely speaking, the orientation of $\widehat{L}$ points in the direction that increases the balance of the weight towards x. Hereafter, we will always assume that x satisfies condition (5.11), in which case the orientation (5.12) is always consistent, courtesy of Lemma 5.3. This excludes from the possible values of x a zero-measure subset of $\mathbb{R}^d$, and as a consequence, all the following results are only to be considered valid almost everywhere. This restriction can be easily lifted using some well-known techniques such as symbolic perturbation.

The orientation o_x defined by (5.12) yields a directed graph $(\mathcal{G}_+, o_x)$. In the case of the single-element lifting associated to a weighted Delaunay triangulation, we can prove that the graph is acyclic.

Lemma 5.5. *For $\widehat{\mathcal{M}(V)} = \mathcal{D}_h$, the directed graph $(\mathcal{G}_+, o_x)$ is acyclic. The same is true unconditionally for any single-element lifting $\widehat{\mathcal{M}(V)}$ if $d = 1$.*

Proof. Let $\widehat{X}_1, \ldots, \widehat{X}_r$ be a family of cocircuits, connected by the colines $\widehat{L}_1, \ldots, \widehat{L}_r$ such that the coline $\widehat{L}_i$ connects $\widehat{X}_i$ and $\widehat{X}_{i+1}$, and assume that the cocircuits $\widehat{X}_i$ form a cycle in $\mathcal{G}_+$, i.e., $\widehat{X}_{r+1} = \widehat{X}_1$. For each $1 \leqslant i \leqslant r$, let $Z_i := Z_{X_i}$ the tile in $\mathcal{P}$ corresponding to $\widehat{X}_i$, $\varphi_i := \varphi_{L_i^0}$ be the linear functional corresponding to $\widehat{L}_i$ as in (5.4), and $N_i := N_{L_i^0}$ be the corresponding normal vector (5.6).

For the lifting $\mathcal{D}_h$, there are vectors $y_i \in \mathbb{R}^{d+2}$ such that $(X_i)_v = \langle y_i, (a, h(a), 1)\rangle$, where $(a, 1) = v$, $a \in A$ (Theorem 5.2). Define the point $c_i \in \mathbb{R}^{d+1}$ component-wise as

$$(c_i)_j := \frac{(y_i)_j}{(y_i)_{d+1}},\ j = 1, \dots, d,\ (c_i)_{d+1} := \frac{(y_i)_{d+2}}{(y_i)_{d+1}}, \tag{5.13}$$

which is always possible since $y_{d+1} > 0$. Then, for all $v \in {X_i}^0$, $\langle y_i, v\rangle = 0$ implies

$$\langle c_i, v\rangle = -h(a), \tag{5.14}$$

and as a consequence, for all $v \in {X_i}^0 \cap {X_{i+1}}^0 = {L_i}^0$,

$$\langle c_{i+1} - c_i, v\rangle = 0,$$

i.e., the vector $(c_{i+1} - c_i)$ is parallel to N_i. Let now $b_i := b_{X_i}$ be defined as in (5.7), and let $u = (e, 1)$, $v = (f, 1)$ be the two vectors in V such that $(X_i)_{u,\sigma_1} = (X_{i+1})_{v,\sigma_2}$ for some σ_1, $\sigma_2 \in \{-, +\}$. It is easy to check using (5.2) and (5.13) that $\mathrm{sign}(\langle c_i, v\rangle + h(f)) = \sigma_2$ and $\mathrm{sign}(\langle c_{i+1}, u\rangle + h(e)) = \sigma_1$, and therefore, according to (5.9) and (5.14),

$$\begin{aligned}\mathrm{sign}(\langle c_{i+1} - c_i, b_{i+1} - b_i\rangle) &= \mathrm{sign}(\langle c_{i+1} - c_i, \sigma_1 u - \sigma_2 v\rangle)\\ &= \mathrm{sign}(\sigma_1\langle c_{i+1}, u\rangle + \sigma_2 h(f) + \sigma_1 h(e) + \sigma_2\langle c_i, v\rangle)\\ &= \sigma_1^2 + \sigma_2^2 > 0.\end{aligned}$$

In other words, $(c_{i+1} - c_i)$ points in the same direction as N_i, and therefore $c_{i+1} - c_i = \mu_i N_i$ for some $\mu_i > 0$. We can therefore write

$$0 = \sum_{i=1}^{r}(c_{i+1} - c_i) = \sum_{i=1}^{r}\mu_i N_i,\quad \mu_1, \dots, \mu_r > 0. \tag{5.15}$$

Taking the scalar product of (5.15) with $(x, 1)$, $x \in \mathbb{R}^d$, it follows that, for at least one coline $\widehat{L}_i$, $\langle N_i, (x, 1)\rangle < 0$ and therefore

$$\mathrm{sign}\,(\langle x, N_i\rangle) = \mathrm{sign}(\varphi_i(x, 1)) \neq w(\widehat{X}_{i+1} \mid {L_i}^0) - w(\widehat{X}_i \mid {L_i}^0),$$

and (5.12) fails. In other words, the orientation defined by the cycle cannot be induced by any point x, i.e., all orientations $(\mathcal{G}_+, o_x)$ are acyclic.

In the one-dimensional case, we can obtain a positive linear combination of normals (5.15) without assuming the existence of the vectors y_i. We only give a sketch of the proof. First, there is at least one tile Z_i such that $L_i \neq L_{i+1}$, else the weights $w(\widehat{X}_i \mid L^0)$ would be monotonically increasing (Lemma 5.3). Furthermore, since each tile is convex, each angle $N_i \angle N_{i+1}$ can only be strictly less than π, but the total angle along the cycle must be equal to $2k\pi$, $k \in \mathbb{Z}\backslash\{0\}$. These conditions imply that there is a closed path in $\mathbb{R}^2$ whose j-th displacement vector is directed along N_j. Defining c_i as the i-th vertex of the path then yields (5.15).

□

Remark 5.6. *This construction used in the proof of Lemma 5.5 is analogous to the affinization of central hyperplane arrangements as presented e.g. in [60, Chapter 7].*

As a directed acyclic graph, $(\mathcal{G}_+, o_x)$ can be topologically sorted, and the (only) degree-zero cocircuit $\widehat{Z}$ containing x can be used as the starting node (root) of an oriented path that follows the topological sorting. We prove now that all the other cocircuits $\widehat{Y}$ supported on x are reachable from $\widehat{Z}$ using such a path. First, we need a small lemma in convex theory, very similar (although not equivalent) to Carathéodory's theorem. The proof of this lemma can be found in Appendix A.3.

Lemma 5.7. *Let $A = \{a_1, \dots, a_n\}$ be a set of $n > d+1$ points in $\mathbb{R}^d$, and let $B \subset A$, $|B| = d+1$ be an affinely independent subset of A. Then for every $x \in \operatorname{conv}(A)$ there exists a point $b \in B$ such that b and x are on the same side of $\operatorname{aff}(B \backslash \{b\})$ and $x \in \operatorname{conv}(A \backslash \{b\})$.*

We can now prove that there is always a directed path in $(\mathcal{G}_+, o_x)$ from $\widehat{Z}$ to $\widehat{Y}$.

Proposition 5.8. *Let $\mathcal{D}_h$ be weighted a Delaunay lifting with generic height function h, and let $\widehat{Y} := (Y, +)$ be a positive cocircuit of $\mathcal{D}_h$ such that $x \in \operatorname{conv}(Y^0 \sqcup Y^+)$. Then there is a directed path in $(\mathcal{G}_+, o_x)$ from $\widehat{Z}$ to $\widehat{Y}$.*

Proof. If $Y^+ = \varnothing$, then necessarily $\widehat{Y} = \widehat{Z}$, and we are done. Else, we complete the proof by finding another cocircuit $\widehat{X} := (X, +)$ and an oriented edge $\widehat{X} \xrightarrow{\widehat{L}} \widehat{Y}$ such that $\widehat{X}$ is supported on x and $X^+ \subseteq Y^+$. The same reasoning can then be applied to $\widehat{X}$ and again repeatedly, yielding an oriented path of cocircuits supported on x and with non-increasing $|X^+|$. Since the graph is acyclic (Lemma 5.5) and the number of cocircuits is finite, the process must eventually terminate with $\widehat{X} = \widehat{Z}$ as the root of the path.

In order to find $\widehat{X}$, according to Lemma 5.7, there exists a vector $v \in Y^0$ such that

$$x \in \operatorname{conv}(Y^0 \sqcup Y^+ \backslash \{v\}) \text{ and } v,\, x \text{ are on the same side of } H_v, \tag{5.16}$$

where $H_v := \operatorname{aff}(Y^0 \backslash \{v\})$. Necessarily, this means that there is a vector $w \in Y^+$ which is on the same side of H_v as v, otherwise H_v would separate x from the convex hull $\operatorname{conv}(Y^0 \sqcup Y^+ \backslash \{u\})$ and (5.16) would be false. Proposition 4.4 then guarantees that there is a cocircuit $\widehat{X} := (X, +)$, connected to $\widehat{Y}$ via $\widehat{L}$ in $\mathcal{G}_+$, such that

$$X_{u,\sigma} = Y_{v,-} \text{ for some } u \in X^0,\ \sigma \in \{-, +\}.$$

The vector u is on the same side of H_v as v and x if $\sigma = +$, and on the opposite side if $\sigma = -$. It is then easy to check that, according to definition (5.12), for both choices of σ the edge $\widehat{L} := (Y_{v,-}, +)$ is oriented from $\widehat{X}$ to $\widehat{Y}$. Furthermore, in both cases $X^0 \sqcup X^+ \supseteq Y^0 \sqcup Y^+ \backslash \{v\}$, implying that $\widehat{X}$ is supported on x, and $X^+ \subseteq Y^+$. This completes the proof. □

Proposition 5.8 is important because it shows that every cocircuit $\widehat{X}$ of order p can be connected to $\widehat{Z}$ in $(\mathcal{G}_+, o_x)$ using only cocircuits of order p or less. In practical applications, this implies that all the spline functions of order p supported on any given point can be found efficiently using only spline bases of order $p' \leqslant p$, without the need for auxiliary functions. Therefore, when constructing a spline basis via Algorithm 1, the process can be safely stopped at the desired basis degree, without any need to access higher-order spline functions.

Furthermore, Theorem 5.8 suggests a simple and efficient algorithm to find all the spline functions of a basis supported on a point x, which we summarize in Algorithm 2. The first

step, which requires finding the spline of order $p = 0$ having x in its support, can be efficiently implemented via any search tree algorithm constructed on the simplices in $\mathcal{S}_0$ [58, 59]. Such trees typically have an $O(n \log(n))$ construction complexity and an $O(\log(n))$ query complexity, n being the number of degree-zero splines, and are therefore rather efficient. After this first step, the complexity is simply linear in the number of spline functions (of all degrees $p' \leqslant p$) which are nonzero on x, and does not depend on the total number of functions in the basis.

Algorithm 2 Finds all the simplex spline functions in a basis associated to a Delaunay lifting $\mathcal{D}_h$ that are supported on a point $x \in \mathbb{R}^d$.

Input:

$\mathcal{D}_h$ Delaunay lifting, for example built using Algorithm 1.

x a point in $\mathbb{R}^d$, not lying on the hyperplane $\mathrm{aff}(L^0)$ of any positive coline $\widehat{L}$ of $\mathcal{D}_h$.

Input:

S cocircuits corresponding to splines supported on x

Assumptions: $\textsc{Search}(x)$ is a point-location query function on simplices $\mathcal{S}_0$ returning the order-zero cocircuit containing x, if any. If x lies exactly on the hyerplane $\mathrm{aff}(L^0)$ of some $\widehat{L}$, remove the ambiguity using numerical pertrubation and/or the continuity for spline functions of order $p \geqslant 1$.

1: **procedure** $\textsc{FindSupportedSplines}(\mathcal{D}_h, x)$
2: $Q \leftarrow \varnothing$ queue of positive cocircuits, $S \leftarrow \varnothing$.
3: $\widehat{Z} \leftarrow \textsc{Search}(x)$.
4: **if** $\widehat{Z}$ not found **then return** S.
5: $\textsc{Push}(Q, \widehat{Z})$.
6: **while** Q is not empty **do**
7: $\widehat{X} \leftarrow \textsc{Pop}(Q)$.
8: **if** S contains $\widehat{X}$ **then**
9: go to line 6.
10: add $\widehat{X}$ to S.
11: $N \leftarrow \{\widehat{Y} := (Y, +) \in \mathcal{D}_h$ with $X_{u,\sigma_1} = Y_{v,\sigma_2}$ for $u \in X^0$, $v \in Y^0$, $\sigma_1, \sigma_2 \in \{-, +\}\}$.
12: **for all** $\widehat{Y} \in N$ **do**
13: $L \leftarrow X \circ Y$.
14: $s_x \leftarrow \mathrm{sign}(\varphi_{L^0}(x))$ as in (5.4).
15: $\Delta w \leftarrow w(\widehat{Y} \mid L^0) - w(\widehat{X} \mid L^0)$ as in (5.10).
16: **if** $s_x = \Delta w$ and $x \in \mathrm{conv}(Y^0 \sqcup Y^+)$ **then**
17: $\textsc{Push}(Q, \widehat{Y})$.
return S.

Notice that Algorithm 2 still requires to check explicitly if $x \in \mathrm{conv}(Y^0 \sqcup Y^+)$, albeit for a limited number of splines. In the following subsection, we propose a slightly different construction which includes auxiliary functions but does not require any such check.

Finally, the directed graph $(\mathcal{G}_+, o_x)$, and the path used to find all functions supported on x have a simple visual interpretation in terms of the zonotopal tiling associated to $\widehat{\mathcal{M}(V)}$, which is shown in Figure 4.

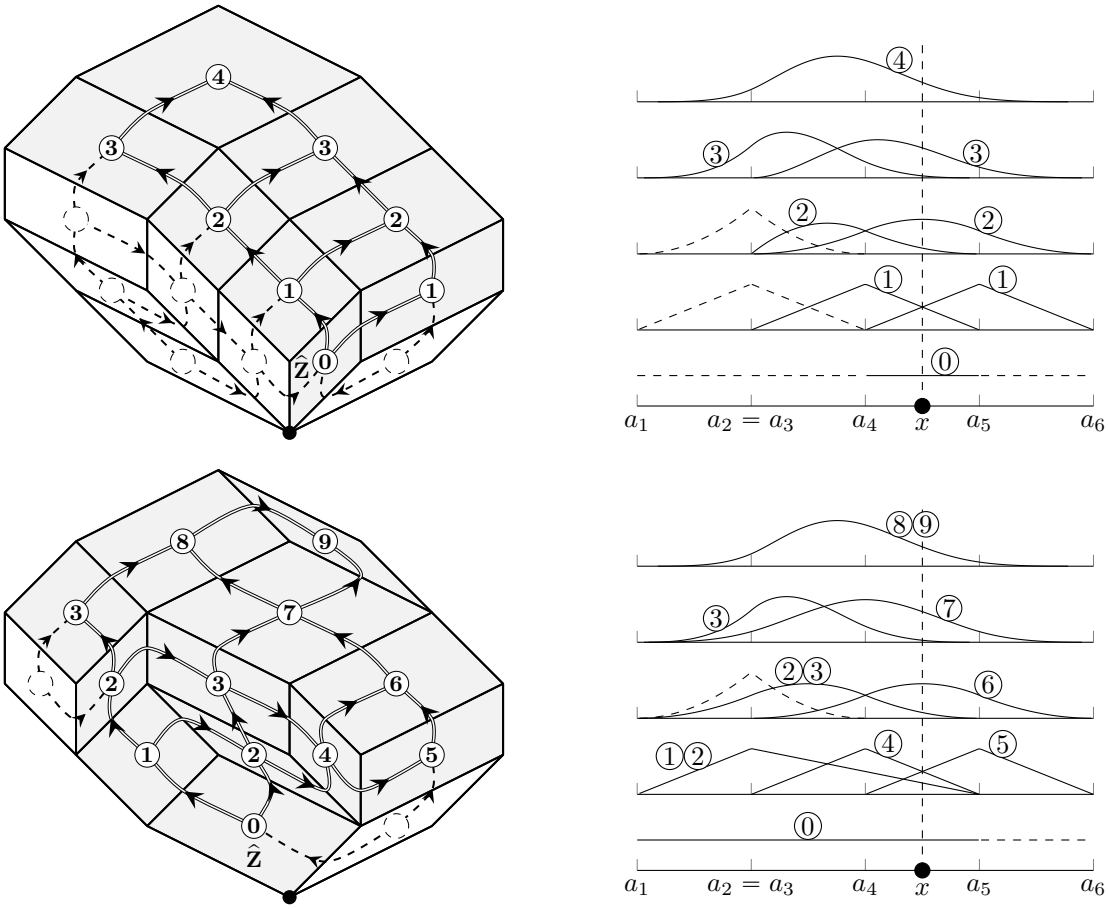

Figure 4: Oriented cocircuit graph for the standard one-dimensional B-spline basis (*top*) and for a basis associated to a weighted Delaunay basis (*bottom*). *Left*: orientation o_x induced on $\mathcal{G}_+$ by a point $x \in (a_4, a_5)$. Solid edges are used in the evaluation of the splines supported on x. Numbers denote the topological sorting order of the evaluation subgraph. *Right*: corresponding spline functions supported on x.

5.3 Evaluation graph

Once all the spline functions supported on a given point x have been determined, one might be tempted to use the oriented graph $(\mathcal{G}_+, o_x)$ and its topological sorting to compute the value of all these functions on x.

Imagine that we want to compute, for some positive cocircuit $\widehat{X} := (X, +)$ supported on x, the value of $\overline{M}_u := M(x \mid X_{u,-})$ for all $u \in X^0$, which can in turn be used to compute the value of the spline itself $\overline{M} := M(x \mid X)$ using (2.2b). For every $u \in X^0$ and every point $x \in \mathbb{R}^d$, if $\overline{M}_u \neq 0$, then there is exactly one edge $\widehat{Y} \to \widehat{X}$ with $X_{u,\sigma_1} = Y_{v,\sigma_2}$, σ_1, $\sigma_2 \in \{-, +\}$. Suppose that the values of $M(x \mid Y)$ and $M(x \mid Y_{v,-})$ are known. Are we able to compute the value of $\overline{M}_u$? The answer depends on the signs of (σ_1, σ_2). In particular, if $(\sigma_1, \sigma_2) = (-, -)$, then $\overline{M}_u = M(x \mid Y_{v,-})$, while in the case $(\sigma_1, \sigma_2) = (-, +)$, $\overline{M}_u = M(x \mid Y)$. Furthermore, in the case $(\sigma_1, \sigma_2) = (+, +)$, $\overline{M}_u$ can be computed from the set of values $M(x \mid Y_{v,-})$, $v \in Y^0$ via a single application of (2.3). However, in the case $(\sigma_1, \sigma_2) = (+, -)$, there seems to be no obvious way to directly obtain $\overline{M}_u$. When this case happens only for a single $u \in X^0$, then it is still possible to obtain $\overline{M}_u$ via (2.2b), after noticing that $\overline{M} = M(x \mid Y_{v,-})$. In general, however, the case $(\sigma_1, \sigma_2) = (+, -)$ can happen more than once for a given point x and a given spline $M(x \mid X)$ in $d \geqslant 3$, making it essentially impossible to build an efficient recurrence scheme without the use of some auxiliary functions.

We propose here a slightly different construction, based on the following observation. First, notice that the problematic case $X_{u,+} = Y_{v,-}$ cannot happen if $M(x \mid X)$ is a top-degree spline on the point multiset A, i.e., a spline of degree $|A| - d - 1$ (see Figure 2). However, we can interpret *any* positive cocircuit $(X, +)$ as one of the top-degree cocircuits in *some* single-element lifting $\widehat{\mathcal{M}(V)}_X$. Specifically, consider the subset of points $A_X := X^0 \sqcup X^+$ and build the induced single-element lifting $\widehat{\mathcal{M}(V)}_X$ on the subset $A_X \subseteq A$ via Lemma 2.9. Clearly, the induced lifting still contains a (unique) positive cocircuit $(Y, +)$ with $Y^0 = X^0$ and $Y^+ = X^+$, and for every other positive cocircuit $(Z, +)$, $Z^0 \sqcup Z^+ \subseteq Y^0 \sqcup Y^+$, so that the corresponding spline $M(x \mid Y) = M(x \mid X)$ is indeed a top-degree spline function associated to $\widehat{\mathcal{M}(V)}_X$. Thus, when evaluating the spline $M(x \mid X)$ in $\widehat{\mathcal{M}(V)}_X$, the problematic case $(\sigma_1, \sigma_2) = (+, -)$ cannot appear, an neither can the case $(\sigma_1, \sigma_2) = (-, -)$.

The reasoning of the previous paragraph suggests a simple procedure to build a set of auxiliary spline functions that are sufficient to compute, via recurrence, the value of $M(x \mid X)$ for a given cocircuit $(X, +)$:

(i) Build the lifting $\widehat{\mathcal{M}(V)}_X$ induced by $\widehat{\mathcal{M}(V)}$ on the subset of points $X^0 \sqcup X^+$ via Lemma 2.9;

(ii) For each $u \in X^0$, find the unique cocircuit $(Y, +)$ in $\widehat{\mathcal{M}(V)}_X$, if any, such that $Y_{v,\sigma} = X_{u,-}$. The value of $M(x \mid X_{u,-})$ can then be computed from the values of $M(x \mid Y)$ and $M(x \mid Y_{v,-})$, $v \in Y^0$, either directly or through (2.3);

(iii) Store the sign vectors Y found in step (ii), and repeat the same process from step (i) starting from each corresponding cocircuit $(Y, +)$.

The set of stored sign vectors obtained during this process corresponds to a set of auxiliary spline functions that are sufficient to compute the value of the spline $M(x \mid X)$ for all x. Applying this process to all cocircuits $(X, +) \in \mathcal{C}_p^*$ then yields a set of auxiliary functions sufficient for the

evaluation of all the basis functions of order p via (2.2b) and (2.3). Notice that the same sign vector can be obtained starting from multiple basis functions, in which case, it should obviously be stored only once.

So far, we have not detailed how the sign vectors corresponding to the cocircuits connected to $(X,+)$ in the induced lifting $\widehat{\mathcal{M}(V)}_X$ can be found efficiently in step (ii). Naively, one can start from the knowledge of the whole lifting $\widehat{\mathcal{M}(V)}$ and apply Lemma 2.9, but this is obviously computationally infeasible in most applications. Thankfully, in the case of weighted Delaunay bases, there is a more efficient way to compute them.

Theorem 5.9. *Let $\mathcal{D}_h$ be a weighted Delaunay lifting, and let $\widehat{X} := (X,+)$ and $\widehat{Y} := (Y,+)$ be two of its positive cocircuits, connected by a coline $\widehat{L} := (L,+)$, with $X_{u,\sigma_1} = Y_{v,\sigma_2}$ for some $\sigma_1, \sigma_2 \in \{-,+\}$. Let w be the weight associated to $\widehat{L}$ via (5.5) with the corresponding weight difference $\Delta w := w(\widehat{Y} \mid L^0) - w(\widehat{X} \mid L^0)$, defined as in (5.10). Define for convenience:*

$$s_{ab} := \operatorname{sign}\left(\det((z,h(z),1)_{z\in L^0},(a,h(a),1),(b,h(b),1))\right), \; s_c := \operatorname{sign}\left(\det((z,1)_{z\in L^0},(c,1))\right).$$

Then $\sigma_1 = -s_{uv}\cdot s_v$, $\sigma_2 = s_{uv}\cdot s_u$ and $\operatorname{sign}(\Delta w) = -s_{uv}\cdot s_u \cdot s_v$.

Proof. The first two equations follow immediately from the Delaunay property (5.1), since $s_{uv}\cdot s_u = \operatorname{sign}(X_v) = \sigma_2$, and $s_{uv}\cdot s_v = -s_{vu}\cdot s_v = -\operatorname{sign}(Y_u) = -\sigma_1$. The third equation comes from the fact that, using Proposition 4.4 and (5.5), if $\sigma_1 = +$ (respectively, $-$) then the weight of u is increasing (resp. decreasing) if u is on the positive side of $\operatorname{aff}(L^0)$, and decreasing (resp. increasing) if it is on its negative side. The same is true, with reversed signs, for σ_2 and s_v. In other words, $\operatorname{sign}(\Delta w) = \sigma_1 s_u = -\sigma_2 s_v = -s_{uv}\cdot s_u\cdot s_v$. □

Theorem 5.9 shows that, in the case of weighted Delaunay bases, it is possible to compute the cocircuit graph (and its orientation) simply from the knowledge of the sets Y^0 of all positive cocircuits $(Y,+)$, without necessarily knowing in advance the corresponding sets Y^+. But according to Theorem 2.6, the collection $\{Y^0 : (Y,+) \text{ cocircuit of } \widehat{\mathcal{M}(V)}_X\}$ is simply given by the collection

$$\mathcal{B} := \{B \subseteq X^0 \sqcup X^+ : |B| = d+1, \det(B) \neq 0\} \tag{5.17}$$

of all affinely independent subsets of size $d+1$ of $X^0 \sqcup X^+$. Therefore, one may compute the sign vectors of all the positive cocircuits in $\widehat{\mathcal{M}(V)}_X$ simply by taking all the subsets in $\mathcal{B}$, computing the cocircuit graph using Theorem 5.9, assigning the sign vector X to the unique cocircuit $(Y,+)$ with $Y^0 = X^0$, and traversing the graph. At each edge $(Y,+) \to (Z,+)$, the sign vector Z can be deduced from Y simply through the relationship $Y_{v,\sigma_1} = Z_{w,\sigma_2}$, where v, w, σ_1 and σ_2 are known.

The procedure outlined here, which we summarize in Algorithm 3, guarantees the construction of an evaluation graph capable of computing the value of all the splines in a basis of any order p at a given point. Notice that the set of auxiliary functions can be computed once and for all after the splines in the basis have been computed (e.g., via Algorithm 1), and stored, together with the evaluation graph, for further use.

Once all the auxiliary functions and the evaluation graph have been computed, the spline functions supported on a given point $x \in \mathbb{R}^d$ can be evaluated via (2.2b) and (2.3), as discussed earlier. We present the evaluation scheme in Algorithm 4 for convenience. Notice that, when all auxiliary functions are taken into account, the degree-zero splines do *not* constitute in general a

Algorithm 3 Builds the auxiliary functions necessary for the recursive evaluation of a set of splines $M(\cdot \mid X)$, $(X,+) \in \mathcal{C}_p^*$ in a weighted Delaunay basis.

Input:

$\mathcal{C}_p^*$ the set of positive cocircuits of order p of a Delaunay lifting $\mathcal{D}_h$

Output:

$\mathcal{A}_p$ a set of pairs (X^0, X^+) corresponding to auxiliary spline functions.

$\mathcal{Y}_p$ a directed graph on $\mathcal{A}_p$ that can be used for the evaluation via (2.2) and (2.3).

1: **procedure** BuildDelaunayAuxiliaryFunctions($\mathcal{C}_p^*$)
2: $\mathcal{A}_p \leftarrow \varnothing$, $\mathcal{Y}_p \leftarrow \varnothing$.
3: **for all** $(X,+) \in \mathcal{C}_p^*$ **do**
4: **if** $\mathcal{A}_p$ contains (X^0, X^+) **then**
5: skip this cocircuit, evaluate next cocircuit from line 3.
6: $Q \leftarrow \varnothing$ queue of positive cocircuits.
7: add (X^0, X^+) to $\mathcal{A}_p$.
8: push(Q, $(X,+)$).
9: **while** Q is not empty **do**
10: $(Y,+) \leftarrow$Pop(Q).
11: $\mathcal{B} \leftarrow \{B \subseteq Y^0 \sqcup Y^+ : |B| = d+1, \det(B) \neq 0\}$.
12: **for all** $v \in Y^0$ **do**
13: $\mathcal{B}_v \leftarrow \{B \in \mathcal{B} : (Y^0 \backslash \{v\}) \subseteq B\}$.
14: sort $\mathcal{B}_v$ according to the weight $w(\cdot \mid Y^0 \backslash \{v\})$ (Theorem 5.9).
15: **for all** immediate neighbors $(Z,+)$ of $(Y,+)$ in $\mathcal{B}_v$ **do**
16: compute $Y_{v,\sigma_1} = Z_{w,\sigma_2}$ as in Theorem 5.9.
17: **if** $(\sigma_1, \sigma_2) = (+,+)$ **then** ▷ Only these two cases are possible
18: $(Z^0, Z^+) \leftarrow (Y^0 \backslash \{v\} \sqcup \{w\}, Y^+ \backslash \{w\} \sqcup \{v\})$.
19: **else if** $(\sigma_1, \sigma_2) = (+,-)$ **then**
20: $(Z^0, Z^+) \leftarrow (Y^0 \backslash \{v\} \sqcup \{w\}, Y^+ \backslash \{w\})$.
21: add the edge $(Z^0, Z^+) \to (Y^0, Y^+)$ to $\mathcal{Y}_p$.
22: **if** $\mathcal{A}_p$ does not contain (Z^0, Z^+) **then**
23: add (Z^0, Z^+) to $\mathcal{A}_p$. push(Q, $(Z,+)$).
return $\{\mathcal{A}_p, \mathcal{Y}_p\}$.

triangulation of $\mathrm{conv}(A)$. However, it is still possible to build search trees capable of efficiently finding all the (possibly overlapping) simplices that contain a given point x. For example, bounding volumes hierarchies such as the R-tree and $R^\star$-tree [58, 59] possess a $O(n\log(n))$ construction complexity and $O(\log(n))$ query complexity, where n is the total number of degree-zero splines in the evaluation graph, and are widely used in many practical and industrial applications. An example of construction of auxiliary functions via Algorithm 3 is shown in Figure 5.

Notice that Algorithm 4 can also be seen as an alternative to Algorithm 2, since it is also capable of finding all the spline functions in a basis that are supported on a given point x, without explicitly checking if any cocircuit is supported on x. This comes at the cost of a (sometimes high) number of auxiliary functions.

We present in Figure 5 and Figure 6 an example of construction of auxiliary spline functions and the corresponding evaluation graph.

A couple of final considerations. First, notice that it is not necessary to explicitly prove that the evaluation graph is acyclic, as this is evident from its construction. In particular, the evaluation graph for splines of order p clearly generates a p-partite oriented graph, to which some connections between splines of the same order are added (Figure 6). But the connections among this subset of cocircuits are the same as those in the full positive cocircuit graph $\mathcal{G}_+$, so that no cycle can be created by the orientation o_x induced by any point x.

Second, notice that in the special case where *every* point in A is repeated at leas $p+1$ times, after building the basis functions via Algorithm 1, we recover the usual de Casteljau algorithm [61] over each simplex in a triangulation of $\mathrm{conv}(A)$. This case thus corresponds to the usual discontinuous Galerkin basis used in many applications. We defer the study of this interesting special case to a future work.

Finally, notice that, as can be gleaned from Figure 5, the procedure outlined here does not lead in general to a minimal amount of auxiliary spline functions. The reason why this is true can be understood by relying on the following consideration: in the evaluation of the induced lifting corresponding to a cocircuit $\widehat{X}$, whenever a subset $Y^0 \in \mathcal{B}$ (5.17) is used, the corresponding spline is constructed on the points $Y^0 \sqcup Y^+ \cap X^0 \sqcup X^+$. Therefore, unless $Y^+ \subseteq X^0 \sqcup X^+$, the spline function corresponding to Y^0 in $\widehat{\mathcal{M}(V)}_X$ will not be the same as the spline function corresponding to Y^0 in $\widehat{\mathcal{M}(V)}$, and the number of auxiliary splines needed will increase. Notice however that, due to the linear nature of the Delaunay condition (5.1), this cannot happen if

$$Y^+ \subset \mathrm{conv}(Y^0). \tag{5.18}$$

The total number of auxiliary spline functions depends on the amount of cocircuits for which condition (5.18) is true, which in turn is determined by the chosen height function h, either globally in Algorithm 1 or locally in each lifting $\widehat{\mathcal{M}(V)}_X$. In particular, the presence of *slivers*, i.e., simplices with skewed aspect ratios, is a known drawback of standard Delaunay triangulations, and can lead to a violation of (5.18) for many cocircuits. Some techniques exist to optimize the Delaunay height function in order to reduce the number of these elements, see e.g. [62, 63]. We defer to a future work the investigation of how these techniques can help optimize the number of auxiliary functions required in the evaluation of simplex splines.

Algorithm 4 Evaluates all the spline functions of the auxiliary functions necessary for the recursive evaluation of a set of splines $M(\cdot \mid X)$, $(X,+) \in \mathcal{C}_p^*$ in a weighted Delaunay basis.

Input:

- $\mathcal{C}_p^*$ positive cocircuits of order p of a Delaunay lifting $\mathcal{D}_h$.
- $\mathcal{A}_p$ a set of pairs (X^0, X^+) corresponding to auxiliary spline functions.
- $\mathcal{Y}_p$ a directed graph on $\mathcal{A}_p$ that can be used for the evaluation via (2.2) and (2.3).
- x a point in $\mathbb{R}^d$, not lying on the hyperplane $\operatorname{aff}(L^0)$ of any positive coline $\widehat{L}$ of $\mathcal{D}_h$.

Output:

The value $M(x \mid X)$ for all $(X,+) \in \mathcal{C}_p^*$

Assumptions: $\textsc{Search}(x)$ is a point-location query function on the pairs in $\mathcal{A}_p$ returning all the pairs of order zero, i.e., of the type $(X^0, \varnothing)$ with $x \in \operatorname{conv}(X^0)$, if any. If x lies exactly on the hyerplane $\operatorname{aff}(L^0)$ of some $\widehat{L}$, remove the ambiguity using numerical pertrubation and/or the continuity for spline functions of order $p \geqslant 1$.

```
procedure EvaluateDelaunaySplines(C*_p, {A_p, Y_p}, x)
    Q ← ∅ queue of pairs, S ← ∅ set of already encountered pairs.
    Z ←Search(x).
    for all (Z^0, ∅) ∈ Z do
        compute M(x | Z^0) via (2.2a).
        Push(Q,(Z^0, ∅)).
    while Q is not empty do
        (X^0, X^+) ←Pop(Q).
        if S does not contain (X^0, X^+) then
            add (X^0, X^+) to S.
            for all outgoing neighbors (Y^0, Y^+) of (X^0, X^+) in Y_p do
                L^0 ← X^0 ∩ Y^0.
                s_x ← sign(φ_{L^0}(x))).
                compute Δw as in Theorem 5.9.
                if s_x = Δw then
                    mark the edge (Y^0, Y^+) → (X^0, X^+) as incoming for (X^0, X^+).
                    Push(Q,(Y^0, Y^+)).
    TS ← topological sorting of all marked edges in Y_p.
    for all edges (X^0, X^+) → (Y^0, Y^+) in TS do
        if X_{u,+} = Y_{v,−} for some u ∈ X^0, v ∈ y^0 then
            M(x | Y_{v,−}) ← M(x | X).
        else if X_{u,+} = Y_{v,+} for some u ∈ X^0, v ∈ Y^0 then
            compute M(x | Y_{v,−}) from M(x | X_{u,−}), u ∈ X^0 via (2.3).
        if all incoming edges for (Y^0, Y^+) have been visited then
            compute M(x | Y) from M(x | Y_{v,−}), v ∈ Y^0 via (2.2b).
    return M(x | X) for all computed pairs (X^0, X^+) that represent cocircuits in C*_p.
```

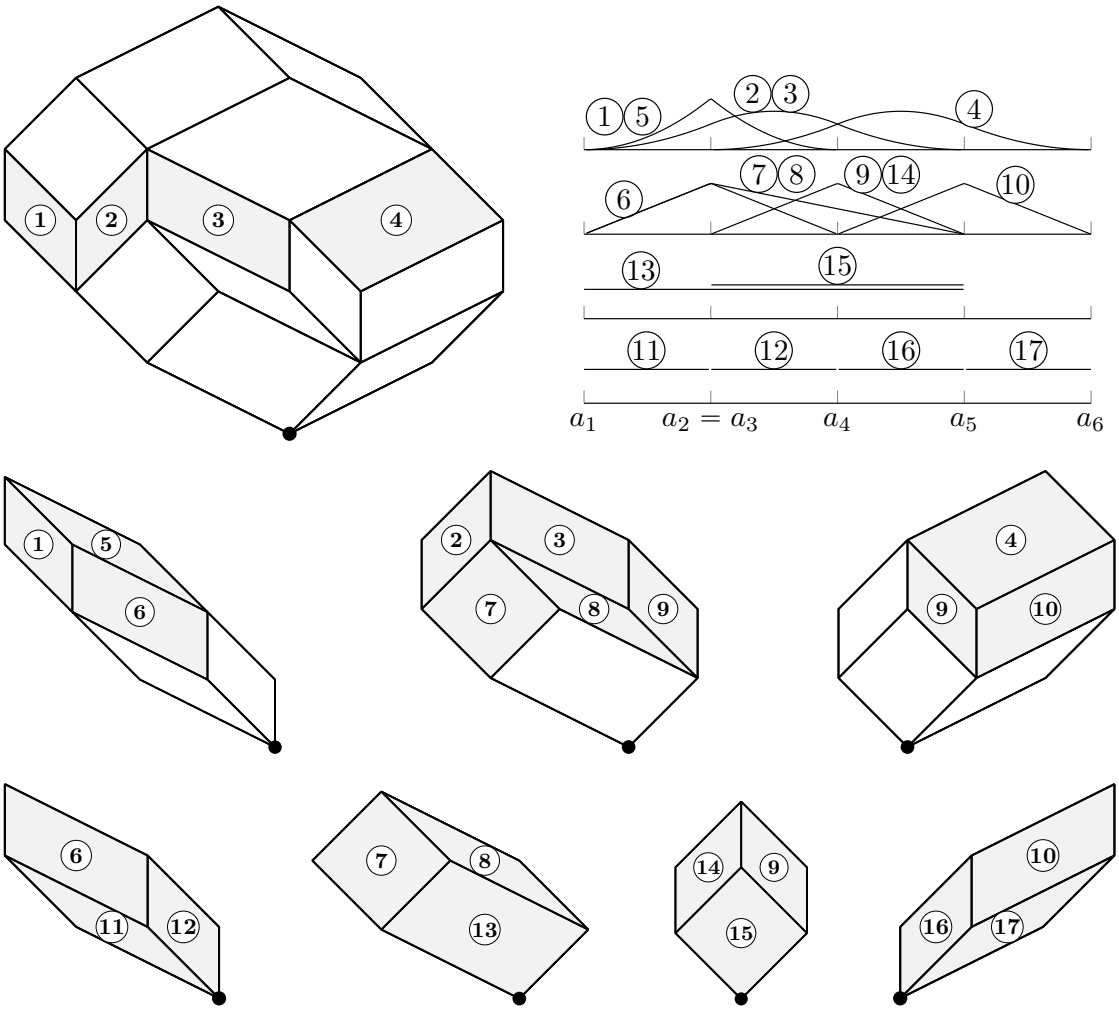

Figure 5: *Top left*: The representation as a zonotopal tiling of the spline bases over the points $A := \{a_1, \ldots, a_6\}$ of Figure 2, with the tiles corresponding to the $p = 2$ basis ($\mathcal{C}_2^*$) highlighted and numbered from 1 to 4. *Top right*: corresponding spline functions and auxiliary functions, numbered 5 through 17, computed by Algorithm 3. *Bottom*: the sub-matroids, represented as tilings, encountered when executing Algorithm 3, with the tiles corresponding to the auxiliary spline functions highlighted.

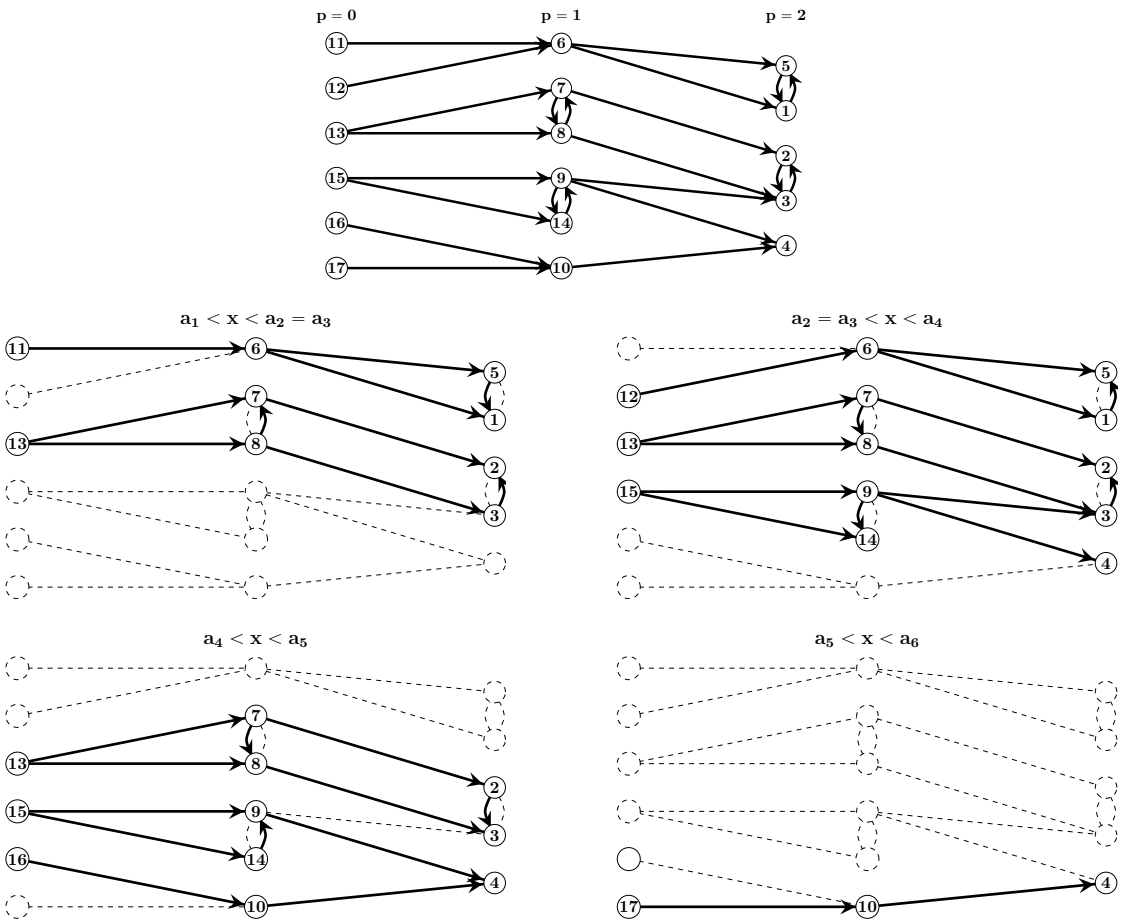

Figure 6: *Top*: the directed evaluation graph $\{\mathcal{A}_2, \mathcal{Y}_2\}$ produced by Algorithm 3, in the case of the example of Figure 5. *Bottom*: The oriented evaluation path obtained when calling Algorithm 4 with different locations of x.

6 Conclusions

We have uncovered the combinatorial structure of multivariate (simplex) spline bases built atop a point multiset A, which ties them to the well studied single-element liftings of the oriented matroid $\widehat{\mathcal{M}(V)}$ and, via the Bohne-Dress theorem, to fine zonotopal tilings. This correspondence allows to generalize the set of known multivariate spline bases and to adapt a known construction algorithm to a more general setting. The underlying combinatorial structure also provides a way to efficiently determine all the spline basis functions supported on any given point x, and to devise a recurrence evaluation scheme that reuses some intermediate results, thus providing a useful first step in the practical application of simplex spline bases in approximation and analysis.

Only simplicial liftings (equivalently, fine zonotopal tilings) have been explored in the present work. Possible connections between non-simplicial liftings and other kinds of multivariate splines, such as Box splines or more general polyhedral splines [64, 65] might be possible by generalizing this restriction.

From a computational standpoint, it is possible that the correspondence uncovered in the present work can be used to obtain further optimized algorithms for multivariate splines. Two aspects in particular deserve a particular attention in our opinion.

First, the evaluation scheme proposed in this work does not guarantee a minimal number of auxiliary functions. On the other hand, optimized weighted Delaunay triangulations coming from computer graphics applications (see e.g. [62, 63]) could provide more suitable height functions, significantly improving the evaluation algorithm.

Second, numerical quadratures, which are a fundamental step for many applications such as isogeometric analysis, are difficult to compute via Gaussian quadrature rules because of the complicated shape of the reduced regularity interfaces of an unstructured spline basis (see e.g. Figure 3, top right). On the other hand, alternative integration techniques based on cone spline decompositions have been developed over the years (see e.g. [66–69]). Since cone splines can be naturally associated to covectors other than cocircuits in $\widehat{\mathcal{M}(V)}$ (equivalently, to lower-dimensional faces of $\mathcal{P}$), it is conceivable that these classic approaches can be made more efficient by exploiting this connection.

Finally, the freedom given by the possibility of constructing spline bases over point sets with repeated knots can be exploited in unstructured isogeometric analysis applications to easily handle boundary conditions and even to create disconnected subdomains, similarly to what is done in discontinuous Galerkin methods, but with a higher degree of flexibility in the size, shape and topology of the subdomains. The arbitrary nature of the point multisets considered in this work could also allow to seamlessly link (unstructured) isogeometric, finite elements and/or discontinuous Galerkin subdomains in the same simulation and within a unified framework. We expect to investigate this promising research direction in a future work.

Acknowledgements

The authors wish to thank Florian Faucher for the many fruitful discussions and the precious feedback.

References

[1] L. Piegl and W. Tiller. *The NURBS book*. Springer Science & Business Media, 2012.

[2] H. Prautzsch, W. Boehm, and M. Paluszny. *Bézier and B-spline techniques*. Springer Science & Business Media, 2013.

[3] T. J. R. Hughes, J. A. Cottrell, and Y. Bazilevs. "Isogeometric analysis: CAD, finite elements, NURBS, exact geometry and mesh refinement". In: *Computer methods in applied mechanics and engineering* 194.39-41 (2005), pp. 4135–4195.

[4] J. A. Cottrell, T. J. Hughes, and Y. Bazilevs. *Isogeometric analysis: toward integration of CAD and FEA*. John Wiley & Sons, 2009.

[5] M. G. Cox. "The numerical evaluation of B-splines". In: *IMA Journal of Applied Mathematics* 10.2 (1972), pp. 134–149.

[6] C. De Boor. "On calculating with B-splines". In: *Journal of Approximation theory* 6.1 (1972), pp. 50–62.

[7] C. De Boor, C. De Boor, E.-U. Mathématicien, C. De Boor, and C. De Boor. *A practical guide to splines*. Vol. 27. Springer-Verlag New York, 1978.

[8] J. Chan and J. A. Evans. "Multi-patch discontinuous Galerkin isogeometric analysis for wave propagation: Explicit time-stepping and efficient mass matrix inversion". In: *Computer Methods in Applied Mechanics and Engineering* 333 (2018), pp. 22–54.

[9] Y. Liu and J. Snoeyink. "Quadratic and cubic B-splines by generalizing higher-order Voronoi diagrams". In: *Proceedings of the twenty-third annual symposium on Computational geometry*. ACM. 2007, pp. 150–157.

[10] Y. Liu. "Computations of Delaunay and higher order triangulations, with applications to splines". PhD thesis. PhD Dissertation, University of North Carolina, Chapel Hill, 2008.

[11] D. Schmitt. "Bivariate B-Splines from Convex Pseudo-circle Configurations". In: *International Symposium on Fundamentals of Computation Theory*. Springer. 2019, pp. 335–349.

[12] C. De Concini and C. Procesi. *Topics in hyperplane arrangements, polytopes and box-splines*. Springer Science & Business Media, 2010.

[13] M. Neamtu. "Delaunay configurations and multivariate splines: A generalization of a result of BN Delaunay". In: *Transactions of the American Mathematical Society* 359.7 (2007), pp. 2993–3004.

[14] E. Schönhardt. "Über die zerlegung von dreieckspolyedern in tetraeder". In: *Mathematische Annalen* 98.1 (1928), pp. 309–312.

[15] H. B. Curry and I. J. Schoenberg. "On Pólya frequency functions IV: the fundamental spline functions and their limits". In: *Journal d'analyse mathématique* 17.1 (1966), pp. 71–107.

[16] B. C. Carlson. "B-splines, hypergeometric functions, and Dirichlet averages". In: *Journal of approximation theory* 67.3 (1991), pp. 311–325.

[17] C. A. Micchelli. "A constructive approach to Kergin interpolation in $\mathbb{R}^k$: Multivariate B-splines and Lagrange interpolation". In: *The Rocky Mountain Journal of Mathematics* (1980), pp. 485–497.

[18] T. Goodman and S. Lee. "Spline approximation operators of Bernstein-Schoenberg type in one and two variables". In: *Journal of Approximation Theory* 33.3 (1981), pp. 248–263.

[19] W. Dahmen. "Polynomials as linear combinations of multivariate B-splines". In: *Mathematische Zeitschrift* 169.1 (1979), pp. 93–98.

[20] W. Dahmen and C. A. Micchelli. "On the linear independence of multivariate B-splines, I. triangulations of simploids". In: *SIAM Journal on Numerical Analysis* 19.5 (1982), pp. 993–1012.

[21] W. Dahmen, C. A. Micchelli, and H.-P. Seidel. "Blossoming begets B-pline bases built better by B-patches". In: *Mathematics of computation* 59.199 (1992), pp. 97–115.

[22] M. Neamtu. "What is the natural generalization of univariate splines to higher dimensions?" In: *Mathematical methods for curves and surfaces* (2001), pp. 355–392.

[23] M. Neamtu. "Bivariate simplex B-splines: A new paradigm". In: *Proceedings Spring Conference on Computer Graphics*. IEEE. 2001, pp. 71–78.

[24] D. Schmitt and J.-C. Spehner. "On Delaunay and Voronoi diagrams of order k in the plane". In: *Proc. 3rd Canad. Conf. Comput. Geom.* 1991, pp. 29–32.

[25] D. Schmitt and J.-C. Spehner. "Order-k Voronoi diagrams, k-sections, and k-sets". In: *Japanese Conference on Discrete and Computational Geometry*. Springer. 1998, pp. 290–304.

[26] W. El Oraiby, D. Schmitt, and J.-C. Spehner. "Centroid triangulations from k-sets". In: *International Journal of Computational Geometry & Applications* 21.06 (2011), pp. 635–659.

[27] B. Dembart, D. Gonsor, and M. Neamtu. "Bivariate quadratic B-splines used as basis functions for collocation". In: *Mathematics for Industry: Challenges and Frontiers, SIAM, Philadelphia, PA* (2005), pp. 178–198.

[28] T. A. Grandine. "The computational cost of simplex spline functions". In: *SIAM journal on numerical analysis* 24.4 (1987), pp. 887–890.

[29] A. Bjorner, A. Björner, M. Las Vergnas, B. Sturmfels, N. White, and G. M. Ziegler. *Oriented matroids*. 46. Cambridge University Press, 1999.

[30] G. M. Ziegler. *Lectures on polytopes*. Vol. 152. Springer Science & Business Media, 2012.

[31] J. Folkman and J. Lawrence. "Oriented matroids". In: *Journal of Combinatorial Theory, Series B* 25.2 (1978), pp. 199–236.

[32] R. Cordovil, K. Fukuda, and A. G. de Oliveira. "On the cocircuit graph of an oriented matroid". In: *Discrete & Computational Geometry* 24.2-3 (2000), pp. 257–266.

[33] J. Bohne. "Eine kombinatorische analyse zonotopaler raumaufteilungen". PhD thesis. Sonderforschungsbereich 343, 1992.

[34] A. W. Dress. "Oriented matroids and Penrose-type tilings". In: *Lecture at the "Symposium on Combinatorics and Geometry", organized by A. Björner, KTH Stockholm*. 1989.

[35] J. Richter-Gebert and G. M. Ziegler. "Zonotopal tilings and the Bohne-Dress theorem". In: *Contemporary Mathematics* 178 (1994), pp. 211–211.

[36] F. Santos. "Realizable but not strongly euclidean oriented matroids". In: *European Journal of Combinatorics* 22.5 (2001), pp. 767–776.

[37] J. A. De Loera, J. Rambau, and F. Santos. *Triangulations Structures for algorithms and applications.* Springer, 2010.

[38] G. C. Shephard. "Combinatorial properties of associated zonotopes". In: *Canadian Journal of Mathematics* 26.2 (1974), pp. 302–321.

[39] P. Galashin, A. Postnikov, and L. Williams. "Higher secondary polytopes and regular plabic graphs". In: *arXiv preprint 1909.05435* (2019).

[40] J. Cao, Z. Chen, X. Wei, and Y. J. Zhang. "A finite element framework based on bivariate simplex splines on triangle configurations". In: *Computer Methods in Applied Mechanics and Engineering* 357 (2019), p. 112598.

[41] P. Fong and H.-P. Seidel. "An implementation of triangular B-spline surfaces over arbitrary triangulations". In: *Computer Aided Geometric Design* 10.3-4 (1993), pp. 267–275.

[42] R. Pfeifle and H.-P. Seidel. "Faster evaluation of quadratic bivariate DMS spline surfaces". In: *Graphics Interface.* CANADIAN INFORMATION PROCESSING SOCIETY. 1994, pp. 182–182.

[43] M. Franssen, R. C. Veltkamp, and W. Wesselink. "Efficient evaluation of triangular B-spline surfaces". In: *Computer Aided Geometric Design* 17.9 (2000), pp. 863–877.

[44] J. Cao, X. Li, G. Wang, and H. Qin. "Surface reconstruction using bivariate simplex splines on Delaunay configurations". In: *Computers & Graphics* 33.3 (2009), pp. 341–350.

[45] L. Ramshaw. "Blossoms are polar forms". In: *Computer Aided Geometric Design* 6.4 (1989), pp. 323–358.

[46] D.-T. Lee. "On k-nearest neighbor Voronoi diagrams in the plane". In: *IEEE transactions on computers* 100.6 (1982), pp. 478–487.

[47] C. P. Rourke and B. J. Sanderson. *Introduction to piecewise-linear topology.* Springer Science & Business Media, 2012.

[48] F. Santos. *Triangulations of oriented matroids.* American Mathematical Soc., 2002.

[49] H. Edelsbrunner, P. Valtr, and E. Welzl. "Cutting dense point sets in half". In: *Discrete & Computational Geometry* 17.3 (1997), pp. 243–255.

[50] F. Aurenhammer and O. Schwarzkopf. "A simple on-line randomized incremental algorithm for computing higher order Voronoi diagrams". In: *International Journal of Computational Geometry & Applications* 2.04 (1992), pp. 363–381.

[51] D. Schmitt and J.-C. Spehner. "k-set polytopes and order-k Delaunay diagrams". In: *2006 3rd International Symposium on Voronoi Diagrams in Science and Engineering.* IEEE. 2006, pp. 173–185.

[52] J. A. Olarte and F. Santos. "Hypersimplicial subdivisions". In: *arXiv preprint 1906.05764* (2019).

[53] I. M. Gelfand, M. Kapranov, and A. Zelevinsky. *Discriminants, resultants, and multidimensional determinants.* Springer Science & Business Media, 2008.

[54] F. Santos. "On Delaunay oriented matroids for convex distance functions". In: *Discrete & Computational Geometry* 16.2 (1996), pp. 197–210.

[55] H. Edelsbrunner and G. Osang. "The Multi-cover Persistence of Euclidean Balls". In: *34th International Symposium on Computational Geometry (SoCG 2018)*. Vol. 99. 2018, 34:1–34:14.

[56] H. Edelsbrunner and A. Nikitenko. "Poisson–Delaunay mosaics of order k". In: *Discrete & computational geometry* 62.4 (2019), pp. 865–878.

[57] L. Guibas and J. Stolfi. "Primitives for the manipulation of general subdivisions and the computation of Voronoi diagrams". In: *ACM transactions on graphics (TOG)* 4.2 (1985), pp. 74–123.

[58] A. Guttman. "R-trees: A dynamic index structure for spatial searching". In: *Proceedings of the 1984 ACM SIGMOD international conference on Management of data*. 1984, pp. 47–57.

[59] N. Beckmann, H.-P. Kriegel, R. Schneider, and B. Seeger. "The R*-tree: an efficient and robust access method for points and rectangles". In: *Proceedings of the 1990 ACM SIGMOD international conference on Management of data*. 1990, pp. 322–331.

[60] M. Beck and R. Sanyal. *Combinatorial reciprocity theorems*. Vol. 195. American Mathematical Soc., 2018.

[61] P. De Casteljau. "Courbes et surfaces à pôles". In: *André Citroën, Automobiles SA, Paris* (1963).

[62] H. Edelsbrunner and D. Guoy. "An experimental study of sliver exudation". In: *Engineering with computers* 18.3 (2002), pp. 229–240.

[63] P. Mullen, P. Memari, F. de Goes, and M. Desbrun. "HOT: Hodge-optimized triangulations". In: *ACM SIGGRAPH 2011 papers*. 2011, pp. 1–12.

[64] T. N. T. Goodman. "Polyhedral splines". In: *Computation of curves and surfaces*. Springer, 1990, pp. 347–382.

[65] C. De Boor, K. Höllig, and S. Riemenschneider. *Box splines*. Vol. 98. Springer Science & Business Media, 2013.

[66] M. Neamtu. "Multivariate divided differences and B-splines". In: *Approximation Theory VI* (1990), pp. 445–448.

[67] M. Neamtu and C. R. Traas. "On computational aspects of simplicial splines". In: *Constructive approximation* 7.1 (1991), pp. 209–220.

[68] E. Cohen, T. Lyche, and R. F. Riesenfeld. "Cones and recurrence relations for simplex splines". In: *Constructive Approximation* 3.1 (1987), pp. 131–141.

[69] C. K. Chui. *Multivariate splines*. Vol. 54. Siam, 1988.

A Supplementary proofs

We provide here for convenience the proof of many of the propositions and lemmas in this work. Some of these proofs can be obtained by patching together or modifying some existing proofs of similar statements. In this case, we strive to provide a reference to the relevant works.

A.1 Oriented matroids

We provide here some proof that define the relationship between covectors and colines and the associated cocircuit graph in an oriented matroid. Proofs for many of these properties can be deduced from some of the results of [29, Chapter 4], or inferred by the general structure of the topological representation of oriented matroids. However, due to the proliferation of different sets of axioms for oriented matroids and relations between them, we were unable to find exact equivalents for many of the statements that we need. Furthermore, translating theorems between equivalent sets of axioms via equivalences (*cryptomorphisms*) is a notoriously complex and error-prone endeavour. For all these reasons, we condense these arguments into a complete set of self-contained proofs, generating in the process a few useful lemmas whose exact statement cannot easily be found in the relevant literature. First, we prove a technical lemma that generalizes property (P4) somewhat.

Lemma A.1. *Let X and Y be two covectors with $S(X,Y) \neq \varnothing$. Then there exists a covector Z such that $Z_e = (X \circ Y)_e$ for all $e \notin S(X,Y)$, $Z_f = 0$ for at least one $f \in S(X,Y)$, and $S(X,Z) = \varnothing$.*

Proof. Let f be an element in $S(X,Y)$. By property (P4), there exists a covector $V^{(1)}$ such that

$$V_f^{(1)} = 0, \;\; V_e^{(1)} = (X \circ Y)_e \;\text{ for all } e \notin S(X,Y).$$

If $S(X,V^{(1)}) = \varnothing$ then $V^{(1)}$ satisfies the lemma. Else, by applying again property (P4) on any element $g \in S(X,V^{(1)}) \subset S(X,Y)$, we obtain another covector $V^{(2)}$ such that

$$V_g^{(2)} = 0, \;\; V_f^{(2)} = X_f, \;\; V_e^{(2)} = (X \circ V^{(1)})_e = (X \circ Y)_e \text{ for all } e \notin S(X,Y).$$

Since $S(X,V^{(2)}) \subset S(X,V^{(1)})$, the process can be repeated until $S(X,V^{(n)}) = \varnothing$. □

We turn our attention to the relationship between covectors and colines. We wish to show that a coline can be obtained as a conformal composition of two and only two cocircuits. This condition can be characterized equivalently, and more conveniently, in terms of the partial ordering on $\mathcal{M}$.

Lemma A.2. *Let X and Y be two distinct cocircuits and L a coline. Then L is a conformal composition of X and Y, i.e., $X \circ Y = L$ and $S(X,Y) = \varnothing$, if and only if $X < L$ and $Y < L$.*

Proof. If $X, Y < L$, then clearly $S(X,Y) = \varnothing$, and $X \circ Y$ has rank strictly higher than X or Y, thus $X \circ Y \geqslant L$. On the other hand, $(X \circ Y)^0 = X^0 \cap Y^0 \supseteq L^0$, implying $X \circ Y \leqslant L$. Taking these two inequalities together, we conclude that $X \circ Y = L$. The opposite implication can be simply deduced by the fact that, if $S(X,Y) = \varnothing$, then X, Y and $L = X \circ Y$ all agree on nonzero values, and if $X \neq Y$ then L^0 is a strict subset of both X^0 and Y^0. □

Lemma A.3. *Let X, Y be two covectors such that $\mathbf{0} < X < Y$. Then there exists another covector $Z \neq X$ such that $\mathbf{0} < Z < Y$.*

Proof. $X < Y$ is equivalent to $X^0 \supset Y^0$ and $S(X,Y) = \varnothing$. Consider the two covectors Y and $V := -X \circ Y$. Clearly, $e \in S(X,V)$ if and only if $e \notin X^0$. Then by Lemma A.1 there exists a covector Z with

$$Z_f = (X \circ Y)_f = Y_f \text{ on } X^0 \supset Y^0, \;\; Z_g = 0 \text{ for some } g \notin X^0$$

and therefore $Z^0 \supset Y^0$ and $Z \neq X$. Moreover, Z is nonzero in $X^0 \backslash Y^0$, and $S(Y, Z) = \varnothing$, completing the proof. □

We are finally ready to prove Lemma 2.3.

Lemma 2.3. *Any coline L can be expressed as the conformal composition $L = X \circ Y$, $S(X, Y) = \varnothing$ of two cocircuits $X, Y \in \mathcal{C}^*$ in a unique way.*

Proof. By Lemma A.2, we must find two distinct cocircuits X and Y such that $X < L$ and $Y < L$. Since L has rank one more than a cocircuit, there exists at least one covector X such that $\mathbf{0} < X < L$. Lemma A.3 then yields another distinct cocircuit Y such that $\mathbf{0} < Y < L$, thus proving that at least one such pair exists.

Next, we prove that X and Y are the only cocircuits satisfying the conditions $X < L$ and $Y < L$. Assume that there is a third distinct cocircuit Z such that $Z < L$. Lemma A.1, applied to the pair X, $-Y$, guarantees the existence of a covector V such that

$$V_e = -L_e \text{ for } e \in X^0 \backslash Y^0, \;\; V_f = L_f \text{ for } f \in Y^0 \backslash X^0, \;\; V_g = 0 \text{ for } g \in X^0 \cap Y^0 = L^0.$$

and, furthermore, $S(X, V) = \varnothing$, implying that $S(L, V) = X^0 \backslash L^0$. Applying Lemma A.1 again to the pair L, V yields a new covector W with

$$W_e = L_e \text{ for } e \in Y^0 \backslash X^0, \;\; W^0 \supset L^0, \;\; S(W, L) = \varnothing,$$

implying $W < L$. If W is not identically zero on the set $X^0 \backslash L^0$, then $X < X \circ W < L$, which contradicts the fact that L is a coline. Similarly, we conclude that W is identically zero over $Z^0 \backslash L^0$. But then $W^0 \supset X^0$, and thus $\mathbf{0} < W < X$ which contradicts the fact that X is a cocircuit. Therefore, there can be at most two such cocircuits, ending the proof. The relationship between the zero sets of the covectors L, X, Y, Z, V and W are summarized in Figure 7 for clarity. □

This proposition implies that the cocircuit graph is simple. To prove that there is no isolated vertex, we provide a proof of Lemma 2.4.

Lemma 2.4. *Let X be a cocircuit. Then there exists another cocircuit Y with $S(X, Y) = \varnothing$ such that $L = X \circ Y$ is a coline.*

Proof. Consider another cocircuit $V \neq -X$. If $S(X, V) = \varnothing$ or $S(X, -V) = \varnothing$, then let $W = X \circ V$ or $W = X \circ -V$, respectively. In both cases, $X < W$, and we can find a coline L in the chain $X < \ldots < W$, possibly W itself. Applying Lemma A.3 yields another covector $Y < L$, which by Lemma A.2 is the desired cocircuit.

If neither $S(X, V) = \varnothing$ nor $S(X, -V) = \varnothing$, then use Lemma A.1 to obtain a covector V' such that

$$S(X, V') = \varnothing, \;\; V'_e = X_e \text{ for all } e \in S(X, -V), \;\; V'_f = 0 \text{ for some } f \in S(X, V).$$

V' cannot be comparable to X, since $V'_f = 0 \neq X_f$ would then imply $V' < X$. Then we can take the cocircuit in the chain $\mathbf{0} < \ldots < V'$, possibly V' itself, and proceed as in the previous paragraph. □

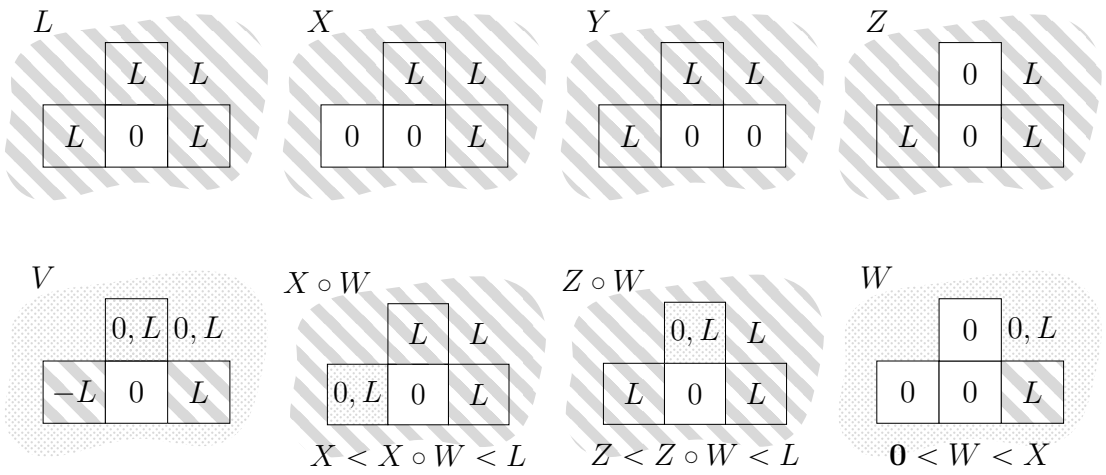

Figure 7: Venn diagram for the cocircuits used in the proof of Lemma 2.3. A zero indicates that the cocircuit is everywhere zero in that subset, a hatched pattern indicates that it is everywhere nonzero, and a dotted pattern that some values might be zero, but not all. All nonzero values are compatible with L, since all covectors obey $S(L, \cdot\,) = 0$. The last three figures represent the three contradictory possibilities of the proof.

A.2 Single-element liftings

We provide here the proofs of the useful Lemma 2.7 and Lemma 2.8 of Section 2.4.

Lemma 2.7. *Let $\widehat{\mathcal{M}(V)}$ be a single-element lifting of an oriented matroid built on a point configuration matroid with rank $d+1$. Then, for every cocircuit $(X,+)$, such that $\left|X^0\right| = d+1$, $\det(X^0) := \det(v_i)_{v_i \in X^0} \neq 0$.*

Proof. Assume that $\det(X^0) = 0$. This means that there is a hyperplane $H \subset \mathbb{R}^d$ passing through all the $d+1$ points in X^0, i.e., by (2.5) there is a nonzero covector $(R,0)$ with $X^0 \subseteq R^0$. If $S(X,R) \neq \varnothing$ and $S(X,-R) \neq \varnothing$, then by Lemma A.1 there has to exist a covector $(Y,+)$ with

$$Y_e = 0 \text{ for some } e \in S(X,R), \quad Y_f = X_f \neq 0 \text{ for some } f \in S(X,-R), \quad Y_g = 0 \text{ for all } g \in X^0.$$

Since moreover $S(X,Y) = \varnothing$ and $X_e \neq 0$, it follows that $\mathbf{0} < (Y,+) < (X,+)$, which contradicts the fact that $(X,+)$ is a cocircuit. Without loss of generality, choose the orientation of R such that $S(X,R) = \varnothing$. Then, since $(X,+)^0 \subset (R,0)^0$, we have $\mathbf{0} < (R,0) < (X,+)$, which is again a contradiction. The only conclusion is that $\det(X^0) \neq 0$. □

Lemma 2.8. *Let $\widehat{\mathcal{M}(V)}$ be a simplicial single-element lifting point configuration oriented matroid. Then, for each $u \in X^0$, the sign vector $(L,+) := (X_{u,\sigma},+)$ is a coline of $\widehat{\mathcal{M}(V)}$ for $\sigma \in \{-,+\}$, and all positive colines can be obtained in this way. In particular, all colines of the form $(L,+)$ have $\left|L^0\right| = d$.*

Proof. The subset $X^0 \backslash \{u\}$ has cardinality d, and since any set of d points lies on a common hyperplane H, there is a covector $(R,0)$ with $R^0 \supseteq X^0 \backslash \{u\}$. Moreover, by Lemma 2.7, u cannot

lie on H, and therefore $R_u \neq 0$. Without loss of generality, choose R such that $R_u = \sigma$. Then the covector

$$(L, +) := (X, +) \circ (R, 0)$$

is equal to $(X, +)$ everywhere except u, where $X_u = 0$ and $L_u = \sigma$, i.e., $L = X_{u,\sigma}$. Moreover, $(L, +)$ is a coline, since $X < L$, X and L differ by only one zero value, and there cannot be any covector L' with $X < L' < L$.

A coline $\widehat{L} := (L, +)$ can be expressed uniquely as $\widehat{L} = \widehat{X} \circ \widehat{Y}$ with $S(\widehat{X}, \widehat{Y}) = \varnothing$. Without loss of generality, chose $\widehat{X} = (X, +)$, let $u \in X^0 \backslash Y^0$ and let $\sigma = Y_u$. Then $X_{u,\sigma}$ is a coline, and since $\mathbf{0} < X < X_{u,\sigma} \leqslant (L, +)$, the only possibility is $(L, +) = (X_{u,\sigma}, +)$. □

A.3 Convex sets

We provide a proof of Lemma 5.7, a slight variation of a classical proof of Carathéodory's theorem.

Lemma 5.7. *Let $A = \{a_1, \ldots, a_n\}$ be a set of $n > d+1$ points in $\mathbb{R}^d$, and let $B \subset A$, $|B| = d+1$ be an affinely independent subset of A. Then for every $x \in \operatorname{conv}(A)$ there exists a point $b \in B$ such that b and x are on the same side of $\operatorname{aff}(B \backslash \{b\})$ and $x \in \operatorname{conv}(A \backslash \{b\})$.*

Proof. First, assume that $x \in \operatorname{conv}(B)$. In this case, for all $b \in B$, x is on the same side of $\operatorname{aff}(B \backslash \{b\})$ as b. But since $|A| > d + 1$, we can pick a point $a \in A \backslash B$, and the simplices $\{\operatorname{conv}(B \backslash \{c\} \sqcup \{a\}); c \in B\}$ cover $\operatorname{conv}(B)$. Thus, there is a point $c \in B$ such that $x \in \operatorname{conv}(B \backslash \{c\} \sqcup \{a\})$ that satisfies the lemma.

Assume now that $x \notin \operatorname{conv}(B)$. The condition $x \in \operatorname{conv}(A)$ is equivalent to

$$x = \sum_{a \in A} \mu_a a$$

for some real numbers μ_a satisfying $\mu_a \geqslant 0$, $\sum_{a \in A} \mu_a = 1$. Since the points in B are affinely independent, we can express $x = \sum_{b \in B} \lambda_b b$, with $\sum_{b \in B} \lambda_b = 1$. We extend this to a linear combination $x = \sum_{a \in A} \lambda_a a$ by defining $\lambda_a := 0$ for $a \in A \backslash B$. We have

$$\sum_{a \in A} \mu_a = 1 = \sum_{a \in A} \lambda_a,$$

and therefore $\sum_{a \in A} (\mu_a - \lambda_a) = 0$. The expression $\mu_a - \lambda_a$ cannot be identically zero for all $a \in A$, since otherwise $x \in \operatorname{conv}(B)$, which we have excluded. Thus, there must be at least one $b \in B$ with $\lambda_b > \mu_b \geqslant 0$. If we pick a point $c \in B$ such that

$$c \in \operatorname*{arg\,min}_{b \in B} \left\{ \alpha_b := \frac{\mu_b}{\lambda_b - \mu_b} : \lambda_b > \mu_b \right\},$$

we can write the positive linear combination

$$\sum_{a \in A} \left[\mu_a - (\lambda_a - \mu_a) \alpha_c \right] a = x, \quad \mu_a - (\lambda_a - \mu_a) \alpha_c \geqslant 0, \tag{A.1}$$

and clearly $\mu_c - (\lambda_c - \mu_c) \alpha_c = 0$. Thus, the point c satisfies the lemma, since $\lambda_c > \mu_c \geqslant 0$

implies that c and x are on the same side of $\mathrm{aff}(B\backslash\{c\})$, and x can be expressed as the convex combination (A.1) with the point c having a zero coefficient. $\square$

RESEARCH CENTRE
BORDEAUX – SUD-OUEST

200 avenue de la Vieille Tour
33405 Talence Cedex

Publisher
Inria
Domaine de Voluceau - Rocquencourt
BP 105 - 78153 Le Chesnay Cedex
inria.fr

ISSN 0249-6399