HAL
open science

On robustness against disturbances of passive systems with multiple invariant sets

Nelson Barroso, Rosane Ushirobira, Denis Efimov, Alexander Fradkov

To cite this version:

Nelson Barroso, Rosane Ushirobira, Denis Efimov, Alexander Fradkov. On robustness against disturbances of passive systems with multiple invariant sets. International Journal of Control, 2020, 10.1080/00207179.2020.1750709 . hal-02523086

HAL Id: hal-02523086

https://inria.hal.science/hal-02523086v1

Submitted on 28 Mar 2020

HAL is a multi-disciplinary open access archive for the deposit and dissemination of scientific research documents, whether they are published or not. The documents may come from teaching and research institutions in France or abroad, or from public or private research centers.

L'archive ouverte pluridisciplinaire **HAL**, est destinée au dépôt et à la diffusion de documents scientifiques de niveau recherche, publiés ou non, émanant des établissements d'enseignement et de recherche français ou étrangers, des laboratoires publics ou privés.

REGULAR PAPER

On robustness against disturbances of passive systems with multiple invariant sets

N. F. Barroso[a], R. Ushirobira[a], D. Efimov[a], and A. L. Fradkov[b]

[a]Inria, University of Lille, CNRS, UMR 9180 - CRIStAL, F-59000 Lille, France; [b]Institute for Problems of Mechanical Engineering RAS, Saint Petersburg, Russia

ARTICLE HISTORY
Compiled March 28, 2020

ABSTRACT
Robustness of stability with respect to external perturbations is an important property characterizing the ability of the dynamics to counteract the influence of uncertainties. In the present paper such a property is investigated for the class of passive and strictly passive systems, which have several invariant compact and globally attracting subsets in the unforced scenario. It is assumed that the storage and supply rate functions are sign-definite with respect to these sets. The results are obtained within the framework of input-to-state stability and integral input-to-state stability for multistable systems. The robustness conditions are obtained for open-loop and for closed-loop cases, *i.e.* when an output feedback is required to guarantee robustness. Two applications (related with the model of multispecies populations) of the proposed theory are used to illustrate its efficiency.

KEYWORDS
Passive systems; Lyapunov methods; multistability; robust stability; input-to-state stability; integral input-to-state stability

1. Introduction

In numerous scientific disciplines, ranging from mechanics and electronics (Efimov, Schiffer, Barabanov, & Ortega, 2017; Hayachi, 1964) to biology (Laurent & Kellershohn, 1999; Pchelkina & Fradkov, 2012) and neurosciences (Pisarchik & Feudel, 2014), the analysis of stability robustness in the context of multistable dynamics has become more and more important. Systems with multiple invariant sets include bistable dynamics (with at least two stable equilibria) (Chaves, Eissing, & Allgöwer, 2008; Yakubovich, Leonov, & Gelig, 2004), almost globally stable systems (with only one purely attracting invariant set) (Angeli, 2004), and nonlinear systems with generic structure of invariant sets (Angeli, Ferrell, & Sontag, 2004; Dudkowski et al., 2016; Enciso & Sontag, 2005; F. Forni & Sepulchre, 2014; Guckenheimer & Holmes, 1983; Rumyantsev & Oziraner, 1987; Stan & Sepulchre, 2007; Vorotnikov, 1998).

The evaluation of the stability of an equilibrium or a limit cycle can be performed locally (in the first approximation), but such a local analysis is less pertinent to investigate robustness, since a perturbation may push the system to the domain where a linearized model looses its validity. Therefore, a global analysis is required to study

CONTACT N. F. Barroso. Email: nelson.de-figueiredo-barroso@inria.fr

robustness, then the multistability phenomenon arises naturally since for complex nonlinear dynamics the possible final states and motions can be non-unique. There are many concepts to study multistability (see the papers above), and in this work we will follow the theory initiated in (Efimov, 2012), where a global asymptotic stability notion has been proposed, as well as the necessary and sufficient Lyapunov characterizations for such multistable systems, considering all compact invariant solutions of the system (including locally stable and unstable ones). In (Angeli & Efimov, 2015), it has been highlighted that the most natural way of investigating stability properties in this context is to drop the Lyapunov stability requirement, to add a restriction on the decomposability of invariant sets, and to ask for attractiveness only.

For the analysis of robustness, the input-to-state stability (ISS) framework (Sontag & Wang, 1995, 1996) is one of the most popular, and its development for multistable systems in terms of usual Lyapunov dissipation inequalities has been obtained in (Angeli & Efimov, 2015). Next, other useful stability concepts got their extension for this class of systems: the notion of detectability or output-to-state stability (OSS) was generalized in (P. Forni & Angeli, 2016b) and the integral input-to-state stability (iISS) (Angeli, Sontag, & Wang, 2000; Liberzon, Sontag, & Wang, 1999; Sontag, 1998) was extended in (P. Forni & Angeli, 2017). Specifically, it was introduced a notion of iISS as the conjunction of global attractiveness with zero disturbances (0-GATT) and the uniform bounded-energy bounded-state properties (UBEBS) providing again an equivalent characterization in terms of Lyapunov/LaSalle-like dissipation inequalities. Further research along the lines of multistable systems addressed the analysis and synthesis on specific problems such as conditions of synchronization (Ahmed, Ushirobira, Efimov, & Perruquetti, 2016), stability of nonlinear cascades and feedback interconnections (P. Forni & Angeli, 2016a) or periodic systems (Efimov et al., 2017).

Another popular way for studying the influence of exogenous inputs and the stability of interconnections is based on the concept of passivity. The class of passive dynamics is omnipresent in mechanics, electric circuits and systems biology (Fradkov, 2007; Nijmeijer & van der Schaft, 1990; Ortega, Loría, Nicklasson, & Sira-Ramirez, 1998). Unfortunately, the passivity of systems does not imply directly its robustness against perturbations, it is mainly a kind of nonlinear input-output relation. Consequently, the conditions of ISS and iISS of passive systems with respect to a compact and connected invariant set were treated before in the literature: (Arcak & Kokotović, 2001) and (Efimov, 2006; Efimov & Fradkov, 2008) where the ISS/iISS stabilizability by an output feedback for passive and strictly passive systems was considered.

In the present work, we aim on extending such a global robustness analysis for passive systems in a context of multiple invariant sets (compact, globally attracting, but maybe disconnected). Preliminary results in this direction were provided in (Barroso, Ushirobira, Efimov, & Fradkov, 2019). Here we provide a more detailed development and a more challenging and realistic example, in the electronics field, which shows when a control transformation is necessary to change the invariant set shape in order to guarantee the robust stability of the system by using a speed-gradient control method.

The outline of this paper is as follows. The main definitions and the problem statement are given in sections 2 and 3, while the obtained results are presented in Section 4. Section 5 is devoted to applications within the domains of theoretical biology and physics. Final remarks and discussion are summarized in Section 6.

2. Definitions

Let $\mathcal{M}$ be a n-dimensional smooth manifold without boundary, equipped with a metric $\delta : \mathcal{M} \times \mathcal{M} \to \mathbb{R}_+ := \{s \in \mathbb{R} : s \geq 0\}$. Consider a nonlinear model of dynamical systems evolving on this manifold:

$$\dot{x}(t) = f(x(t), u(t)), \quad \forall\, t \in \mathbb{R}_+, \tag{1}$$
$$y(t) = h(x(t)), \tag{2}$$

where $x(t) \in \mathcal{M}$ is the state vector, $u(t) \in \mathbf{U} \subseteq \mathbb{R}^m$ is the input vector, u is an element of $\mathcal{U}$, the set of admissible controls $\mathbb{R}_+ \to \mathbf{U}$ (locally essentially bounded and measurable signals), and $y(t) \in \mathcal{Y} \subseteq \mathbb{R}^p$ is the output vector. Let $f : \mathcal{M} \times \mathbf{U} \to T_x\mathcal{M}$ be a locally Lipschitz continuous function on $\mathcal{M}$ (here $T_x\mathcal{M}$ denotes the tangent space of $\mathcal{M}$ at x), and assume that $h : \mathcal{M} \to \mathcal{Y}$ is continuously differentiable, $h(0) = 0$ and $f(0, 0) = 0$.

Denote by $x(t, x_0; u)$ the uniquely defined solution of (1) at time $t \geq 0$ such that $x(0) = x_0$ under the input $u \in \mathcal{U}$. For the unperturbed system, *i.e.* the system (1) with $u \equiv 0$, we have:

$$\dot{x}(t) = f(x(t), 0), \quad t \geq 0, \tag{3}$$

We say that $S \subset \mathcal{M}$ is *invariant* if for all $x_0 \in S$, $x(t, x_0; 0) \in S$ for all $t \in \mathbb{R}$. For a set $S \subset \mathcal{M}$ and $x \in \mathcal{M}$ define the corresponding distance as

$$|x|_S = \inf_{a \in S} \delta(x, a),$$

with a convention that for a point $x_{\text{or}} \in \mathcal{M}$, selected as the origin on $\mathcal{M}$, $|x| = |x|_{\{x_{\text{or}}\}}$ can be considered as a norm. For a measurable function $g : \mathbb{R}_+ \to \mathbb{R}^m$, define its L_∞-norm as

$$||g||_\infty = \operatorname{ess\,sup}_{t \geq 0} |g(t)|.$$

A function $V : \mathcal{M} \to \mathbb{R}_+$ is called *positive definite* if it vanishes only at the origin, and *proper unbounded* if $V(x) \to +\infty$ for $|x|_{\mathcal{S}} \to +\infty$. The Lie derivative of a continuously differentiable function V along a vector field $f : \mathcal{M} \to \mathbb{R}^n$ is denoted by:

$$DV(x)f(x, u) = \frac{\partial V(x)}{\partial x} f(x, u).$$

Definitions of functions belonging to classes $\mathcal{K}$ and $\mathcal{K}_\infty$, used in the following developments, can be found in (Dashkovskiy, Efimov, & Sontag, 2011).

2.1. Robust stability notions for a decomposable compact invariant set $\mathcal{W}$

In this subsection, we list several ISS and iISS stability properties for (1) with respect to a compact invariant set $\mathcal{W}$. Most of these properties are direct extensions of the classical ISS and iISS concepts introduced in (Angeli et al., 2000; Liberzon et al., 1999; Sontag & Wang, 1995, 1996). Notions about decomposition of a compact invariant set $\mathcal{W}$ are given in Appendix A. Here we assume that $\mathcal{W}$ satisfies the following hypothesis:

Assumption 1. (Angeli & Efimov, 2015) The compact invariant set $\mathcal{W}$, containing all α- and ω-limit sets of the unperturbed system (3), admits a finite decomposition without cycles: $\mathcal{W} = \bigcup_{i=1}^{k} \mathcal{W}_i$ for some non-empty disjoint compact sets $\mathcal{W}_i$, which form a filtration ordering of $\mathcal{W}$, as detailed Appendix A (Definition A.2).

Definition 2.1. (Angeli & Efimov, 2015; P. Forni & Angeli, 2017) The system (1) has the *practical asymptotic gain (pAG)* property if there exist $\eta \in \mathcal{K}_\infty$ and $q \geq 0$ such that for all $x_0 \in \mathcal{M}$ and all $u \in \mathcal{U}$, the solutions are defined for all $t \geq 0$ and the following holds:

$$\limsup_{t \to +\infty} |x(t, x_0, u)|_{\mathcal{W}} \leq \eta(||u||_\infty) + q. \tag{4}$$

If $q = 0$, then we say that the *asymptotic gain (AG)* property holds. Moreover, if (4) is satisfied for $q = 0$ for the system (3) only, then we will say that (1) has the *zero-global attraction (*0*-GATT)* property with respect to a compact invariant set $\mathcal{W}$.

Definition 2.2. (Angeli & Efimov, 2015) The system (1) has the *limit property (LIM)* with respect to $\mathcal{W}$ if there exists $\mu \in \mathcal{K}_\infty$ such that for all $x_0 \in \mathcal{M}$ and all $u \in \mathcal{U}$ the solutions are defined for all $t \geq 0$ and the following holds:

$$\inf_{t \geq 0} |x(t, x_0, u)|_{\mathcal{W}} \leq \mu(||u||_\infty).$$

Definition 2.3. (Angeli & Efimov, 2015) The system (1) has the *practical global stability (pGS)* property with respect to $\mathcal{W}$ if there exists $\beta \in \mathcal{K}_\infty$ and $c \geq 0$ such that for all $x_0 \in \mathcal{M}$ and all $u \in \mathcal{U}$, the following holds for all $t \geq 0$:

$$|x(t, x_0; u)|_{\mathcal{W}} \leq \beta\left(\max\{|x_0|_{\mathcal{W}} + c, ||u||_\infty\}\right).$$

This is equivalent to $|x(t, x_0; u)|_{\mathcal{W}} \leq \widetilde{\beta}\left(\max\{|x_0|_{\mathcal{W}}, ||u||_\infty\}\right) + q$ for some $\widetilde{\beta} \in \mathcal{K}_\infty$ and $q \geq 0$.

Definition 2.4. (Angeli & Efimov, 2015; P. Forni & Angeli, 2017) A $\mathcal{C}^1$ function $V : \mathcal{M} \to \mathbb{R}$ is a *practical ISS-Lyapunov function* for (1) if there exist $\mathcal{K}_\infty$ functions α_1, α_2, α_3 and γ, and $q \geq 0$, $c \geq 0$ such that

$$\alpha_1(|x|_{\mathcal{W}}) \leq V(x) \leq \alpha_2(|x|_{\mathcal{W}}) + c \tag{5}$$

and the following dissipation inequality holds for all $(x, u) \in \mathcal{M} \times \mathbf{U}$:

$$DV(x)f(x, u) \leq -\alpha_3(|x|_{\mathcal{W}}) + \gamma(|u|) + q. \tag{6}$$

If (6) holds for $q = 0$, then V is said to be an *ISS-Lyapunov function.* If (6) holds for $q = 0$ and a positive definite function $\alpha_3 : \mathbb{R}_+ \to \mathbb{R}_+$, then V is said to be an *iISS-Lyapunov function.*

The existence of α_2 and c follows, without any additional hypothesis, by standard continuity arguments. Note that if $q = c = 0$, then such an ISS-Lyapunov function coincides with the conventional one from (Sontag & Wang, 1995), which implies global Lyapunov stability of the set $\mathcal{W}$ for $u = 0$ and, hence, excludes the multistable behavior (when some of the subsets $\mathcal{W}_i$ may be unstable). Under Assumption 1, whenever the

$\mathcal{W}_i$ are recurrent invariant sets of the unperturbed system, any Lyapunov function which is non-increasing along the solutions of (3) also takes constant values on any $\mathcal{W}_i$, $1 \leq i \leq k$, from the decomposition of $\mathcal{W}$.

Definition 2.5. (P. Forni & Angeli, 2017) The system (1) has the *uniform bounded-energy bounded-state (UBEBS)* property if for some $\alpha, \gamma, \sigma \in \mathcal{K}_\infty$ and some positive constant c, the following estimate holds for all $t \geq 0$, all $x_0 \in \mathcal{M}$ and all $u \in \mathcal{U}$:

$$\alpha(|x(t, x_0; u)|_{\mathcal{W}}) \leq \gamma(|x_0|_{\mathcal{W}}) + \int_0^t \sigma(|u(\tau)|)d\tau + c.$$

Definition 2.6. (P. Forni & Angeli, 2017) The system (1), (2) has the *smooth dissipativity* property if there exist a $\mathcal{C}^1$ function $V : \mathcal{M} \to \mathbb{R}_+$, α_1, α_2, $\sigma \in \mathcal{K}_\infty$, a continuous positive definite function α_4, and a continuous output map $h : \mathcal{M} \to \mathbb{R}^p$ with

$$|x|_{\mathcal{W}} = 0 \;\Rightarrow\; h(x) = 0, \quad \forall x \in \mathcal{M}$$

such that (5) is satisfied for all $x \in \mathcal{M}$ and the following dissipation inequality holds for all $(x, u) \in \mathcal{M} \times \mathcal{U}$:

$$DV(x)f(x, u) \leq -\alpha_4(|h(x)|) + \sigma(|u|). \tag{7}$$

Definition 2.7. (P. Forni & Angeli, 2017) The system (1), (2) has the *weak zero-detectability* property if the following relation holds:

$$h(x(t, x_0; 0)) \equiv 0, \quad \forall t \geq 0 \;\Rightarrow\; |x(t, x_0; 0)|_{\mathcal{W}} \to 0 \quad \text{as} \quad t \to +\infty.$$

The principal results connecting these properties are as follows:

Theorem 2.8. *(Angeli & Efimov, 2015) Consider a nonlinear system (1) and let $\mathcal{W}$ be a compact invariant set containing all α- and ω-limit sets of the system (3) as in Assumption 1. Then the following facts are equivalent:*

1) *The system enjoys the pAG or AG property.*
2) *The system admits an ISS Lyapunov function.*
3) *The system admits an ISS Lyapunov function constant on invariant sets.*
4) *The system admits a practical ISS Lyapunov function.*
5) *The system enjoys the LIM property and the pGS.*

The system as in (1) that satisfies these properties will be called ISS in the multistable sense *with respect to the set $\mathcal{W}$ and input u.*

Theorem 2.9. *(P. Forni & Angeli, 2017) Consider a nonlinear system (1) and let $\mathcal{W}$ be a compact invariant set containing all α- and ω-limit sets of the system (3) as in Assumption 1. Then the following facts are equivalent:*

1) *0-GATT and UBEBS properties.*
2) *Existence of an iISS Lyapunov function V such that $DV(x) = 0$ for all $x \in \mathcal{W}$.*
3) *Existence of an iISS Lyapunov function V.*
4) *Existence of an output function that makes the system smoothly dissipative and weakly zero-detectable.*

The system as in (1) that satisfies these properties will be called iISS in the multistable sense *with respect to the set $\mathcal{W}$ and input u.*

Lemma 2.10. *(P. Forni & Angeli, 2017) Let system (1) be 0-GATT. Then, there exist a smooth function $U : \mathcal{M} \to \mathbb{R}$, $\nu_1, \nu_2, \delta \in \mathcal{K}$, a continuous positive definite function $\varpi : \mathbb{R}_+ \to \mathbb{R}_+$ and a positive constant c such that:*

$$\nu_1(|x|_{\mathcal{W}}) \leq U(x) \leq \nu_2(|x|_{\mathcal{W}} + c),$$
$$DU(x)f(x,u) \leq -\varpi(|x|_{\mathcal{W}}) + \delta(|u|),$$

for all $x \in \mathcal{M}$ and $u \in \mathcal{U}$. Moreover, $DU(x) = 0$ for all $x \in \mathcal{W}$.

Note that if the function U in Lemma 2.10 were proper, *i.e.* $\nu_1 \in \mathcal{K}_\infty$, then it would qualify U as an iISS-Lyapunov function. Unfortunately, this is not necessarily the case, therefore U needs to be used in addition to a proper function V to obtain a new iISS-Lyapunov function such that the iISS property holds:

Corollary 2.11. *Consider a nonlinear system (1) in the conditions of Theorem 2.9, then the following properties are equivalent:*

i) iISS with respect to the set $\mathcal{W}$ and input u.
ii) 0-GATT and existence of an output function making the system smoothly dissipative.

Proof. The iISS property comes from the fact that the sum $V(x) + U(x)$ is an iISS-Lyapunov function, with V and U given in Definition 2.6 and Lemma 2.10, respectively. The converse is a consequence of Theorem 2.9. □

2.2. Passive and strict passive systems

Compared to the ISS theory, the theory of passive systems has been proposed a half of century earlier and it is formulated using similar tools. For further analysis, we will assume that the dimensions of the input and the output spaces are the same and $m = p$:

Definition 2.12. (Hill & Moylan, 1980) The system (1), (2) is *passive* with a continuous function $V : \mathcal{M} \to \mathbb{R}_+$ if for all $x_0 \in \mathcal{M}$, $u \in \mathcal{U}$, and $t \geq 0$, the following inequality is satisfied:

$$V(x(t, x_0, u)) \leq V(x_0) + \int_0^t \varpi(x(\tau, x_0; u), u(\tau), y(\tau, x_0; u))d\tau, \tag{8}$$
$$\varpi(x, u, y) = y^T u - \beta(x), \tag{9}$$

where $\beta : \mathcal{M} \to \mathbb{R}_+$ is a continuous function. Then ϖ and V are called, respectively, *supply rate* and *storage functions.*

A system is called *passive with a certain rate of dissipation* β if the equality sign holds in (8). It is called *passive without losses* if it is possible to use the equality sign and $\beta \equiv 0$ in (8). Finally, if in (9) β is a positive definite function, then the system is called *strictly passive.*

If the storage function V is continuously differentiable, then the inequality on the

trajectories (8) gives a simpler form:

$$DV(x)f(x,u) \leq \varpi(x,u,y)$$

that has to be verified for all $x \in \mathcal{M}$, $u \in \mathcal{U}$ and $y \in \mathcal{Y}$.

A system that admits the passive property with a proper storage function V is Lyapunov stable for $u(t) \equiv 0$, $t \geq 0$, and the strictly passive system in such a case is asymptotically Lyapunov stable with a Lyapunov function V (these facts can be proven using LaSalle arguments since positive definiteness of the storage function V has not been claimed).

In this work, we will also deal with a subclass of nonlinear dynamical system (1), (2) affine in the input of the following form:

$$\dot{x}(t) = F(x(t)) + G(x(t))u(t), \quad t \in \mathbb{R}_+, \tag{10}$$

$$y(t) = h(x(t)), \tag{11}$$

where as before $x(t) \in \mathcal{M}$ is the state vector, $u(t) \in \mathbf{U} \subseteq \mathbb{R}^m$ is the input vector, $u \in \mathcal{U}$, and $y(t) \in \mathcal{Y} \subseteq \mathbb{R}^p$ is the output vector. For this system $f(x,u) = F(x)+G(x)u$, where $F : \mathcal{M} \to \mathbb{R}^n$ and the columns of the matrix function $G : \mathcal{M} \to \mathbb{R}^{n\times m}$ are assumed to be locally Lipschitz continuous on $\mathcal{M}$, $h : \mathcal{M} \to \mathbb{R}^p$ is continuously differentiable, and $F(0) = h(0) = 0$.

The Kalman-Yakubovich-Popov Lemma claims that for the system (10), (11) the output function for passive and strict passive systems with a differentiable storage function can be defined in the following way:

$$h(x) = (DV(x)\ G(x))^T = \left(\frac{\partial V}{\partial x}\ G(x)\right)^T.$$

3. Problem statement

Passivity and strict passivity mean that the system is respectively, Lyapunov stable and asymptotically Lyapunov stable for zero inputs. However, in the general case these properties are not robust with respect to input perturbations and an arbitrary small input signal may initiate unstable processes in the system (Efimov, 2006; Efimov & Fradkov, 2008). Therefore, the task of iISS (ISS) stabilization of such a kind of systems is of great interest.

Definition 3.1. (Sontag, 1990) The system (10), (11) is *iISS (ISS) output stabilizable* if there exists for it a control law

$$u(t) = \varphi(y(t)) + v(t),$$

where $\varphi : \mathcal{Y} \to \mathbf{U}$ is a Lipschitz continuous function and $v(t) \in \mathbf{U}$, $v \in \mathcal{U}$, is a new input vector. That makes the closed-loop system iISS (ISS) with respect to v.

Thus, the problem studied in this work can be formally written by introducing the following hypothesis:

Assumption 2. A passive or strict passive system described by the affine nonlinear model (10), (11) has a decomposable compact invariant set $\mathcal{W}$ as in Assumption 1 and

its storage function $V : \mathcal{M} \to \mathbb{R}_+$ is continuously differentiable and satisfies (5) for all $x \in \mathcal{M}$, while the supply has the form:

$$\varpi(x, u, y) = y^T u - \beta(|x|_{\mathcal{W}}), \tag{12}$$

where $\beta : \mathbb{R}_+ \to \mathbb{R}_+$ is a continuous function.

Problem 1. Under the Assumption 2, find the conditions for iISS or ISS output stabilizability for (10), (11) (according to Definition 3.1).

To choose a control law that provides the iISS (ISS) property for a strict passive system (10), (11) in the setting of multiple invariant sets, we need to introduce some specifications on the storage function and the supply rate (these additional requirements do not contradict to Definition 2.12). Hence, the evolution of the state $x(t) \in \mathcal{M}$ must be evaluated with respect to the invariant set $\mathcal{W} \subset \mathcal{M}$ (the functions V and β are defined with respect to $|x|_{\mathcal{W}}$), and we have to assume that this set is globally attractive for $u \equiv 0$.

Another interesting point consists in distinguishing the situations where an additional feedback $\varphi(y)$ is needed or where we can select $\varphi(y) = 0$.

4. Main results

In this section, we present several results about different conditions on robust stability and stabilizability of passive systems.

Theorem 4.1. *Assume that a strict passive system (10), (11) admits Assumption 2. If one of the following conditions holds:*

$$\lim_{|x|_{\mathcal{W}} \to +\infty} \frac{|h(x)|}{V(x)} < +\infty, \tag{13}$$

$$y^T \varphi(y) \geq \varepsilon |y|^2, \quad \forall y \in \mathcal{Y},\ \varepsilon > 0, \tag{14}$$

then the control law

$$u = -\varphi(y) + v \tag{15}$$

with $\varphi : \mathcal{Y} \to \mathbf{U}$ a Lipschitz continuous function satisfying $y^T \varphi(y) > 0$ for all $y \neq 0$ and $v \in \mathcal{U}$, ensures the iISS property for the system with respect to $\mathcal{W}$ and the disturbance input v.

If the condition (14) is satisfied and β is an element of $\mathcal{K}_\infty$ or $|h(x)| \geq \varrho(|x|_{\mathcal{W}})$ for all $x \in \mathcal{M}$ and some $\varrho \in \mathcal{K}_\infty$, then the control (15) guarantees the ISS property with respect to $\mathcal{W}$ and the disturbance input v, and V is an ISS-Lyapunov function.

Proof. The derivative of the storage function V under the introduced restrictions for the strict passive system (10), (11) can be upper estimated with respect to $\mathcal{W}$ as follows:

$$\dot{V} \leq y^T u - \beta(|x|_{\mathcal{W}}),$$

where β is a positive definite function. Substituting the control law we obtain:

$$\dot{V} \leq y^T(-\varphi(y) + v) - \beta(|x|_{\mathcal{W}}).$$

Let us consider a new storage function for the system which inherits all properties of the function V:

$$U(x) = \ln(1 + V(x)).$$

Consequently, U is a positive definite, continuously differentiable and proper function with respect to the set $\mathcal{W}$. The derivative of U is given by (taking into account the equality $y = (DV(x)\ G(x))^T$):

$$\dot{U} = \frac{DV(x)[F(x) - G(x)\varphi(y)] + DV(x)G(x)v}{1 + V(x)} \leq \frac{-\beta(|x|_{\mathcal{W}})}{1 + V(x)} + \frac{|h(x)||v|}{1 + V(x)}.$$

Under condition (13) there exists a constant $\lambda > 0$ such that

$$\frac{|h(x)|}{1 + V(x)} \leq \lambda, \quad \forall x \in \mathcal{M},$$

and the time derivative of U for the system can be rewritten as follows:

$$\dot{U} \leq \frac{-\beta(|x|_{\mathcal{W}})}{1 + V(x)} + \lambda|v|.$$

Thus, according to Definition 2.4, the function U is an iISS-Lyapunov function for the system, which is equivalent to the iISS property. Now, if (14) is satisfied, then:

$$\dot{V} \leq -\varepsilon|y|^2 + |y||v| - \beta(|x|_{\mathcal{W}}).$$

Hence, using the inequality $2|y||v| \leq \varepsilon|y|^2 + \varepsilon^{-1}|v|^2$ that is valid for any $\varepsilon > 0$, this last estimate can be transformed to the following one:

$$\dot{V} \leq -\beta(|x|_{\mathcal{W}}) - 0.5\varepsilon|y|^2 + 0.5\varepsilon^{-1}|v|^2.$$

Therefore, from the definitions of iISS- and ISS-Lyapunov functions, the desired conclusions can be obtained and V is an iISS- or ISS-Lyapunov function. □

Theorem 4.1 establishes the connection between the form of the function β and the robustness property of the system with respect to inputs bounded in L_∞ or L_2 sense. An important consequence of this theorem consists in the ability of a strict passive system to become robust with respect to an additive perturbation in the input channel under any output feedback with an arbitrary small gain ε (Efimov, 2006; Efimov & Fradkov, 2008; Pchelkina & Fradkov, 2012).

Proposition 4.2. *Assume that a strict passive system (10), (11) admits Assumption 2 and the following inequality holds:*

$$|h(x)| \leq b(V(x)),\ \forall x \in \mathcal{M}$$

where $b : \mathbb{R}_+ \to \mathbb{R}_+$ is a function satisfying the integral constraint:

$$\int_0^{+\infty} \frac{dr}{1+b(r)} = +\infty.$$

Then the system is iISS with respect to $\mathcal{W}$ and the input u.

Proof. The derivative of the storage function V under introduced restrictions for the strict passive system (10), (11) can be upper estimated with respect to $\mathcal{W}$ as follows:

$$\dot{V} \leq y^T u - \beta(|x|_{\mathcal{W}}),$$

where β is a positive definite function. Note that a strict passive system satisfies the 0-GATT property since for $u \equiv 0$ we have

$$\dot{V} \leq -\beta(|x|_{\mathcal{W}}).$$

In other words, V is a Lyapunov function for the system $\dot{x} = F(x)$. Now, let us consider a new storage function for the system (10), (11):

$$U(x) = \int_0^{V(x)} \frac{dr}{1+b(r)}$$

which is clearly proper and positive definite by the introduced hypotheses (note that by the chain rule $U(x) = 0$ for all $x \in \mathcal{W}$ such that $V(x) = 0$). Then, the derivative of U along the trajectories of (10), (11) is given by:

$$\dot{U} = \frac{DV(x)(F(x)+G(x)u)}{1+b(V(x))} = \frac{DV(x)F(x)}{1+b(V(x))} + \frac{|DV(x)G(x)|}{1+b(V(x))}|u|.$$

Finally, using $|DV(x)G(x)| \leq b(V(x))$ we achieve:

$$\dot{U} \leq \frac{-\beta(|x|_{\mathcal{W}})}{1+b(V(x))} + \frac{b(V(x))}{1+b(V(x))}|u| \leq \frac{-\beta(|x|_{\mathcal{W}})}{1+b(V(x))} + |u|.$$

Therefore, from the definition of iISS-Lyapunov function, the desired result is obtained and U is an iISS-Lyapunov function. □

As we can conclude from Theorem 2.9, the iISS property is rather. The conditions of the above theorems expose the technical details of this range for a strict passive system. Now let us consider the same issues for passive systems only.

Theorem 4.3. *Assume that a passive system (10), (11) admits Assumption 2. If the system admits the weak zero-detectability property, the condition (13) and the inequality*

$$\frac{\varphi(|h(x)|)}{V(x)}|h(x)| \geq \kappa(|h(x)|), \quad \forall x \in \mathcal{M}, \tag{16}$$

with a positive definite continuous function $\kappa : \mathbb{R}_+ \to \mathbb{R}_+$ holds, then the control law (15) provides the iISS property for this system with respect to $\mathcal{W}$ and the input v.

Proof. The passivity property implies that for some $\mathcal{C}^1$ storage function $V : \mathcal{M} \to \mathbb{R}_+$, which satisfies the relations (5) for all $x \in \mathcal{M}$, the following inequality holds:

$$\dot{V} \leq y^T u.$$

Substituting in this inequality the control law (15), from the Theorem 4.1 we obtain

$$\dot{V} \leq -\varphi(y)^T y + y^T v.$$

Introducing again the new storage function $U(x) = \ln(1 + V(x))$ we achieve

$$\dot{U} \leq -\frac{|y||\varphi(y)|}{1 + V(x)} + \frac{|y||v|}{1 + V(x)},$$

which according to the condition (13) and (16) can be rewritten as:

$$\dot{U} \leq -\kappa(|y|) + \lambda|v|,$$

where $\lambda > 0$. It follows that the system has the smooth dissipativity property and it is weakly zero-detectable. Therefore, the system is iISS by means of the property 4 from Theorem 2.9. □

Note that Assumption 2 implies 0-GATT property (it refers to Assumption 1, where it is stated that $\mathcal{W}$ contains all α- and ω-limit sets of the unperturbed system $\dot{x} = f(x, 0)$, thus it is the global attractor in the system for $u = 0$).

Theorem 4.4. *Assume that a passive system (10), (11) admits Assumption 2. If the control (15) is applied under (14) and an additional restriction:*

$$\delta(2|\varphi(y)|) \leq \epsilon|y|^2, \quad \forall y \in \mathcal{Y},\ \epsilon > 0,$$

where $\delta \in \mathcal{K}$ is given in Lemma 2.10, then the control law (15) provides the iISS property for this system with respect to $\mathcal{W}$ and the input v.

Proof. In the light of the condition (14), substituting the control (15) in the upper estimate for the derivative of the storage function leads to

$$\dot{V} \leq -\varphi(y)^T y + y^T v \leq -0.5\varepsilon|y|^2 + 0.5\varepsilon^{-1}|v|^2.$$

where the inequality $2a^T b \leq \varepsilon|a|^2 + \varepsilon^{-1}|b|^2$ is used during the last step (which is satisfied for any $a, b \in \mathbb{R}^p$, $\varepsilon > 0$). From this inequality it is easy to see that the smooth dissipativity property holds. Assuming that the 0-GATT property also holds, there exists a semi-proper function $U : \mathcal{M} \to \mathbb{R}_+$ as shown in Lemma 2.10. Let us consider a candidate iISS-Lyapunov function $W = U + V$, then

$$\alpha_1(|x|_{\mathcal{W}}) \leq W(x) \leq \alpha_2(|x|_{\mathcal{W}} + c_1) + \nu_2(|x|_{\mathcal{W}} + c_2),$$

and the derivative of W along the trajectories of the system (substituting $u = -\varphi(y) + v$) can be written as

$$\dot{W} \leq -\varpi(|x|_{\mathcal{W}}) - 0.5\varepsilon|y|^2 + 0.5\varepsilon^{-1}|v|^2 + \delta(|v - \varphi(y)|),$$

which by means of the inequality $\delta(a+b) \leq \delta(2a) + \delta(2b)$ satisfied for any function from class $\mathcal{K}$, it can be rewritten as

$$\dot{W} \leq -\varpi(|x|_{\mathcal{W}}) - 0.5\varepsilon|y|^2 + \delta(2|\varphi(y)|) + 0.5\varepsilon^{-1}|v|^2 + \delta(2|v|).$$

The last inequality, under an additional restriction:

$$-0.5\varepsilon|y|^2 + \delta(2|\varphi(y)|) \leq 0,$$

which can be ensured by taking $\varepsilon = 2\epsilon$, is an iISS-Lyapunov function. □

5. Examples

5.1. N-species Lotka-Volterra system

To exemplify an iISS (ISS) theory application, we will consider a controlled version of the N-species Lotka-Volterra (*predator-pray*) model (Pchelkina & Fradkov, 2012; Rouche, Habets, & Laloy, 1977). In this model it is supposed that for the population of $N > 1$ species, the birth rate of the species $x_\ell \in \mathbb{R}_+$, $\ell = M+1, \ldots, N$ can be controlled with the index $0 \leq M \leq N$. Then the interaction between the species is described by the following system of differential equations:

$$\begin{aligned} \dot{x}_i(t) &= x_i(t)\left(k_i + \beta_i^{-1}\sum_{j=1}^{N} a_{ij}x_j(t)\right), \quad i = 1, 2, \ldots, M, \\ \dot{x}_\ell(t) &= x_\ell(t)\left(k_\ell + \beta_\ell^{-1}\sum_{j=1}^{N} a_{\ell j}x_j(t) + u_\ell(t)\right), \quad \ell = M+1, \ldots, N, \end{aligned} \tag{17}$$

where $u = [u_{M+1}, \ldots, u_N]^T \in \mathbb{R}^{N-M}$ is the control, k_i (k_ℓ) is the speed of the natural increase or death rate of the i-th (ℓ-th) species in the absence of all others with the following convention: $k_i < 0$ ($k_\ell < 0$), if the i-th (ℓ-th) species lives at the expense of others and $k_i > 0$ ($k_\ell > 0$) otherwise. The parameter $\beta_i > 0$ ($\beta_\ell > 0$) reflects the fact that the appearance of a predator is usually connected with the vanishing of one or more preys. The quantities a_{ij}, $i \neq j$ ($a_{\ell j}$, $\ell \neq j$) evaluate the type and the intensity of the interaction between i-th (ℓ-th) and j-th species and form an asymmetric matrix.

Assume that there exists at least one positive equilibrium of (17) for some values of the system parameters:

$$n = (n_1, n_2, \cdots, n_N), \qquad n_i > 0 \quad i = 1, \ldots, N, \tag{18}$$

and consider an auxiliary function W:

$$W(x) = \sum_{i=1}^{N} \beta_i n_i \left(\frac{x_i}{n_i} - \ln\left(\frac{x_i}{n_i}\right)\right).$$

If the condition (18) holds, then W is constant along the trajectories of (17), *i.e.* W is an invariant of (17). As the Hessian matrix of W is positive definite, then $W(x) >$

$W(n)$ for any $x \neq n$, and it can be used to indirectly measure the amplitude of oscillations (Pchelkina & Fradkov, 2012). Hence, by introducing the control goal

$$W(x(t)) \to W^*, \quad t \to \infty, \tag{19}$$

a desired amplitude of oscillations can be achieved by means of a desired level of the quantity W as $t \to \infty$. Note that If $W^* = W(n) = \min_{x \in \mathcal{M}} W(x)$, the goal (19) means the achievement of the equilibrium $x = n$.

Following (Pchelkina & Fradkov, 2012), the problem is to find a control function u stabilizing the desired level W^* of the function W and hence providing an oscillatory property to the system with the needed amplitude of oscillations. As it has been shown in (Pchelkina & Fradkov, 2012), this problem can be solved by means of the speed gradient (SG) method (Fradkov, 2007). To this end it is necessary to introduce another auxiliary function

$$Q(x) = \frac{1}{2}(W(x) - W^*)^2,$$

that can be considered as a storage function for (17), when the goal (19) is achieved provided that $Q(x(t)) \to 0$ as $t \to \infty$. According to the SG method (Fradkov, 2007), to design the control one needs to evaluate first, the time derivative of Q along the system (17), and after the gradient of $\dot{Q}$ with respect to u. The first step yields:

$$\dot{Q}(x, u) = (W(x) - W^*) \sum_{\ell=M+1}^{N} (x_\ell(t) - n_\ell) u_\ell, \tag{20}$$

while the second one gives:

$$\frac{\partial \dot{Q}(x, u)}{\partial u_\ell} = (W(x) - W^*)(x_\ell(t) - n_\ell), \quad \ell = M+1, \ldots, N.$$

Note that by means of equation (20) the system is passive without losses with respect to the output

$$y = (W(x) - W^*) \sum_{\ell=M+1}^{N} (x_\ell(t) - n_\ell).$$

Following the SG method the control action is chosen as

$$u_\ell(t) = -\gamma_\ell (W(x) - W^*)(x_\ell(t) - n_\ell) + v_\ell, \tag{21}$$

for some $\gamma_\ell > 0$ and all $\ell = M+1, \ldots, N$, where $v = [v_{M+1}, \ldots, v_N]^T \in \mathbb{R}^{N-M}$ is a disturbance input (essentially bounded function of time) added to the system in order to investigate the iISS (ISS) stabilizability property and to represent the model uncertainty and environmental influences on the populations.

Substituting (21) in (20) we achieve:

$$\dot{Q}(x,u) \leq -\gamma|(W(x)-W^*)\sum_{\ell=M+1}^{N}(x_\ell(t)-n_\ell)|^2 \\ + |(W(x)-W^*)\sum_{\ell=M+1}^{N}(x_\ell(t)-n_\ell)||v_\ell|,$$

where $\gamma = \min_{\ell=M+1,\ldots,N}\{\gamma_\ell\}$. Therefore, the set of all invariant solutions of the system for $v=0$ is given by $\mathcal{W} = \{n\} \cup \Gamma$, where $\Gamma := \{x : W(x) = W^*\}$.

Finally, we have:

$$\dot{Q}(x,u) \leq -\gamma|y|^2 + |y||v| \leq -0.5\varepsilon|y|^2 + 0.5\varepsilon^{-1}|v|^2 \tag{22}$$

for some $\varepsilon > 0$. Using the same arguments as in Theorem 4.4, it is easy to see that the smooth dissipativity property holds for this system. Also, one can show that for $M = 0$ (which means that the birth rate of all species can be controlled) the equation (22) guarantees the convergence of all solutions to the set $\mathcal{W}$. It means that (22) can be written, according with the characterization of Definition 2.4, as an ISS-Lyapunov function in the form:

$$\dot{Q}(x,u) \leq -\alpha_3(|x|_{\mathcal{W}}) + 0.5\varepsilon^{-1}|v|^2.$$

where α_3 is a $\mathcal{K}_\infty$ function rendering to the system the ISS property.

For $M > 0$, beyond the dissipativity and 0-GATT properties (already satisfied) according to Theorem 4.4, an additional restriction must be checked to render iISS property for the system. For the present example this restriction implies the existence of a function $\delta \in \mathcal{K}$ such that $\delta(2|y|) \leq \epsilon|y|^2$ for some $\epsilon > 0$. However, as this function is not known, the restriction cannot be analytically verified to the example treated in this work.

Now, we will illustrate by means of a simple numerical experiment the convergence of the system trajectories to a set $\mathcal{W}$ with and without perturbations. For that, let us consider a system with one predator and one prey. The manifold $\mathcal{M}$ for this case is the $\mathbb{R}^2_+$, and the model for the system can be written as follows:

$$\begin{aligned} \dot{x}_1 &= k_1x_1 + \beta_1^{-1}a_{12}x_1x_2, \\ \dot{x}_2 &= k_2x_2 + \beta_2^{-1}a_{21}x_1x_2 + x_2u_2, \end{aligned} \tag{23}$$

where $x_1(t) \in \mathbb{R}_+$ and $x_2(t) \in \mathbb{R}_+$ represent, respectively, the predator and the prey populations; $k_1 = -50$, $k_2 = 100$, $\beta_1 = 4$, $\beta_2 = 2$, $a_{12} = 20$, and $a_{21} = -a_{12}$. The equilibrium for the system (23) for these parameters is $n_1 = 10$ and $n_2 = 10$. Therefore, the quantity $W(n) = 60$. For simulations, we choose as the initial condition the point $x(0) = [25\ 25]^T$. We will test two scenarios for W^*: $W(n) < W^* < W(x(0))$ and $W^* \leq W(n) < W(x(0))$.

For the case $W(n) < W^* < W(x(0))$ (which means that the amplitude of oscillation of the system trajectory, indirectly measured by W, will decrease from the $W(x(0))$ level specified by to the one corresponding to set $\Gamma = \{x : W(x) = W^*\}$), we will choose $W^* = 70$, and apply the control law (21) without and with the disturbance

input v. In particular, the control action (21) for our example is given by:

$$u_2(t) = -\gamma_2(W(x) - W^*)(x_2(t) - n_2) + v_2,$$

where it has been selected for simulations $\gamma_2 = 0.1$ and $v_2 = 10\sin(30t)$.

The phase portrait for the controlled system (23) is shown in Figure 1a. As we can conclude, for the case without disturbance the trajectories of the closed-loop system converge to the desired limit cycle, indirectly measured by W, *i.e.* the amplitude of oscillations of the system decrease from the initial level specified by $W(x(0))$ to the one corresponding to the set $\Gamma = \{x : W(x) = W^*\}$. For the case where there exists a disturbance, it is possible to see that the boundedness is kept with some deviations of trajectories around the limit cycle without achieving zero for none of the species. The behavior of W for the controlled system (23) without and with disturbance input is shown in Figure 1b. Note that for the system with disturbance, the signal W oscillates around the desired level W^*. This oscillation can be conveniently decreased by increasing the gain γ_2.

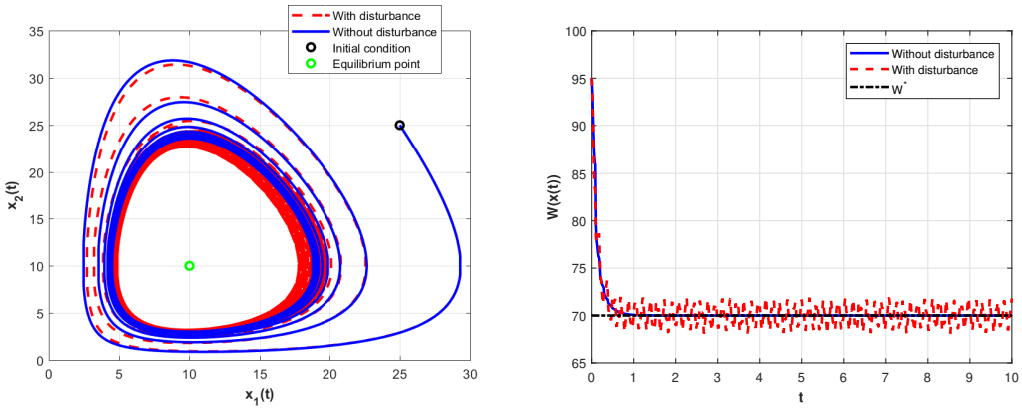

(a) (b)

Figure 1. (a) Phase portrait for the controlled system (23) without and with disturbance input (b) Behavior of W for the controlled system (23) without and with disturbance input. $W^* = 70$

Figure 2a shows the result of simulation for the case $W^* < W(n) < W(x(0))$ where $W^* = 50$ was chosen. It is possible to see that the amplitude of oscillation of the system trajectory for the system (23), without disturbance, instead to go to the desired oscillation level W^*, goes to the equilibrium point, and for the case where the disturbance is present, it oscillates with a small amplitude around the equilibrium point. The behavior of W can be seen in Figure 2c.

Therefore, these results of numerical experiments confirm the theoretical findings of the paper. However, let us consider in the next subsection a more practical and realistic problem in the electronics field.

5.2. Noise-induced transition in a semiconductor-gas-discharge gap system

In this example we consider a nonlinear dynamical model of a semiconductor-gas-discharge gap system. Such a system is presented schematically in Figure 3. It consists of two main components: a semiconductor layer (A) and a gas discharge domain (B).

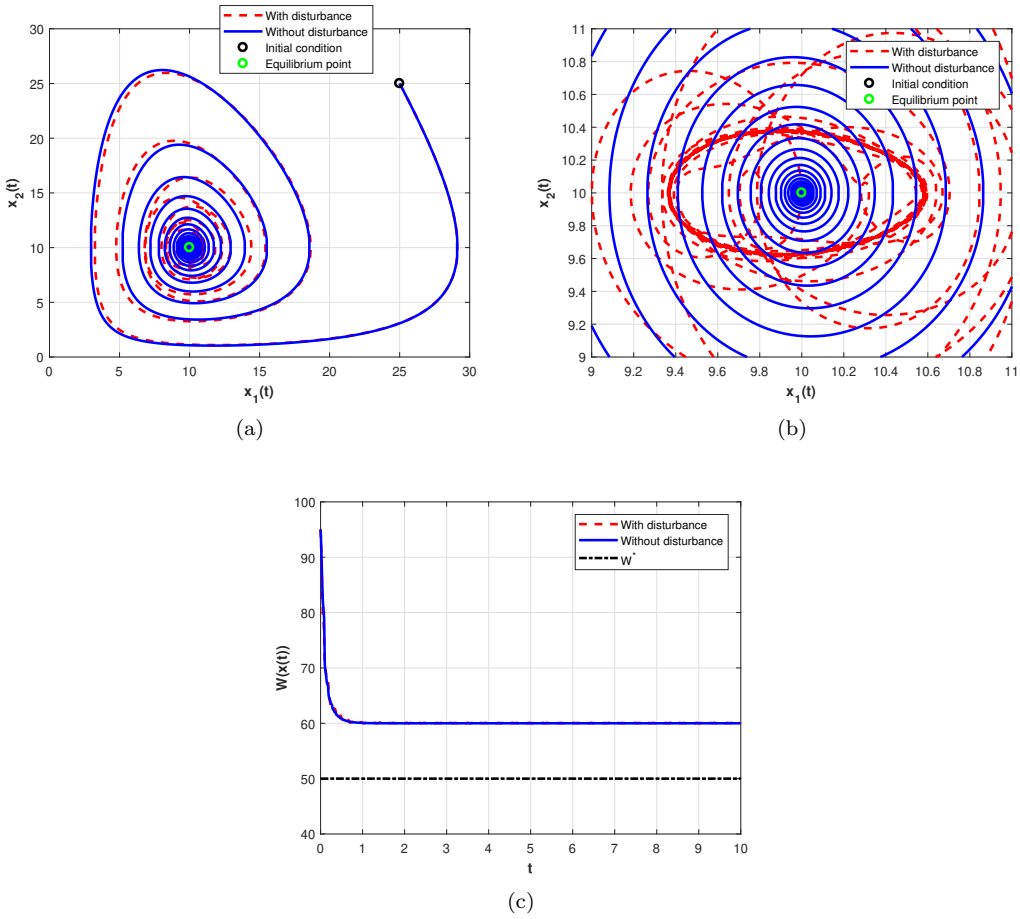

Figure 2. (a) Phase portrait for the controlled system (23) without and with disturbance input (b) Fig. (a) zoomed (c) Behavior of W for the controlled system (23) without and with disturbance input. $W^* = 50$

The planar structure is fed by a voltage source U_m that is connected to plane electrode (C) and (D), which are in contact with the semiconductor and gas discharge components, respectively (Kim, Maurer, Astrov, Bode, & Purwinst, 2001). The model of the

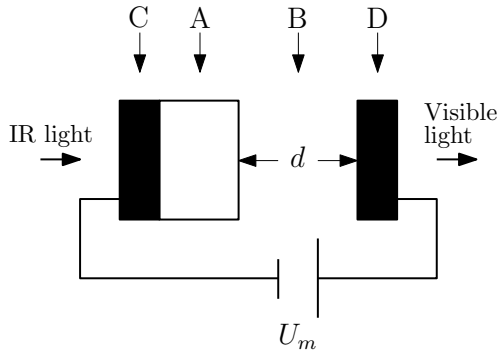

Figure 3. Schematic representation of a semiconductor-gas-discharge gap system

system is supposed to be properly described by the following differential equations (Astrov, Fradkov, & Guzenko, 2008; Kim et al., 2001):

$$\begin{aligned} \dot{x}_1 &= -\frac{x_1}{\tau} + \frac{x_1 x_2}{\tau(E_c + v)}, \\ \dot{x}_2 &= -a x_2 - b x_1 x_2 + a E_m. \end{aligned} \tag{24}$$

where x_1 is the density of free charge carries in the gap and x_2 is the electric field strength in the discharge gap.

The first equation describes the dynamics of density of free carriers in the gap, which is governed by the process of their generation and decay. It is supposed that the process of their generation prevails over their recombination when x_2 is larger than some critical electric field strength E_c.

The second equation describes the charging of capacity of the discharge gap from a source of feeding voltage and its discharging due to the presence of free carriers in the gap. The characteristic time of the charging process is $\tau_E = 1/a$, and b is a coefficient. The maximal value of x_2 in the gap that can be provided by a source of constant voltage is $E_m = U_m/d$ where U_m is the voltage of the fielding source and d is the length of the gap in the direction of the electric current.

The generation of free carriers in the gas-discharge gap is provided by the avalanche of ionization of gas atoms and molecules. The efficiency of this process is known to fluctuate in time, which serves as a source of intrinsic noise. At a small current density the intrinsic noise of the device can initiate large amplitude oscillations in current which can result in spontaneous interruption of the discharge process in the gap, *i.e.* transition from the conductive to the dielectric state of the system can occur (Astrov et al., 2008).

In a simple approach, the influence of the noise on dynamics of the system can be simulated by adding a stochastic noise v to the parameter E_c. On the other hand, by physical principles of the device under consideration it is suggested that control action can be played by properly varying the electric field strength E_m in time (Astrov et al., 2008). Therefore, in this example we are interested in defining the conditions for robust stabilization of the system with respect to the disturbance input v. In other words, we are interested in knowing under what conditions the dynamics of the system

remains within an appropriate operating region (in a vicinity of a given steady-state mode). For that, we proceed with the following analysis.

First let us analyze the system (24) for $E_m = 0$ and $v = 0$, therefore we have

$$\begin{aligned} \dot{x}_1 &= -\frac{x_1}{\tau} + \frac{x_1 x_2}{\tau E_c}, \\ \dot{x}_2 &= -a x_2 - b x_1 x_2, \end{aligned} \tag{25}$$

whose the stationary solutions are given by $n = (0, 0)$ and $n = (-\frac{a}{b}, E_c)$, and the latter equilibrium is unfeasible since the first state component is negative. For this system one could try to use

$$W(x) = \alpha_1 x_1 + \alpha_2 \ln(x_1) + \beta_1 x_1 + \beta_2 \ln(x_2) \tag{26}$$

as an invariant function, with posterior stabilization of its level using the SG method, as it has been proposed in (Astrov et al., 2008). If the values of the parameters α_1, α_2, β_1 and β_2 are properly chosen, then the derivative of W in the direction of the system (25) can be made equal to zero for $u = 0$. However, as it has been observed in our analysis, the level curves of this function are not closed and drive the system solutions to the origin, then stabilization of a level set of W does not lead to a solution for the proposed problem, since almost all trajectories in the closed-loop are converging to the origin.

Another way to deal with this problem is to properly transform the original system (24), by means of an intermediate input signal in order to use the same auxiliary function (26), but with closed level curves. For instance, let us consider

$$E_m = u_0 x_2 + \delta u, \tag{27}$$

thus the system (24) becomes

$$\begin{aligned} \dot{x}_1 &= -\frac{x_1}{\tau} + \frac{x_1 x_2}{\tau(E_c + v)}, \\ \dot{x}_2 &= a(u_0 - 1)x_2 - b x_1 x_2 + a\delta u. \end{aligned} \tag{28}$$

In this case, by choosing $u_0 > 1$, the system will have a positive equilibrium point $n = \left(\frac{a(u_0-1)}{b}, E_c\right)$ and the auxiliary function (26) can be used as a conserved quantity for it with $\delta u = 0$. To illustrate better the problem, we can see by means of Figure 4 the behavior of W with respect to the system (28) when $\delta u = 0$, for $u_0 = 0$ and $u_0 = 2$, respectively.

In the second case, the set of level curves that composes the phase space it is formed by a set of closed orbits around the equilibrium point. Thus the solution of the original problem consists basically in finding a control law δu such that the regulated system oscillates as close as possible to the equilibrium point even under the influence of disturbances.

To do that, let us first find the parameters α_1, α_2, β_1, and β_2 such that W is a constant quantity for the system (28) with $\delta u = 0$. For that we proceed with the derivative of W with respect to (28) assuming $v = 0$ and $\delta u = 0$. By this way we

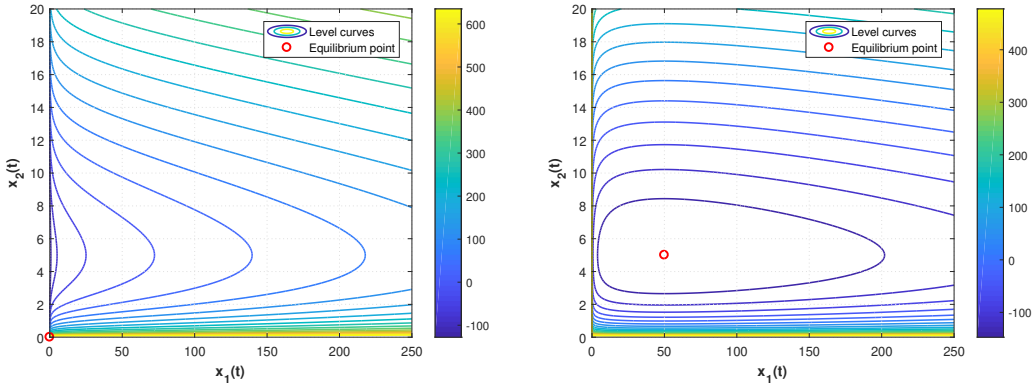

(a) (b)

Figure 4. Level curves of the function W for the system (28) in the cases (a) $u_0 = 0$, and (b) $u_0 = 2$

achieve

$$\begin{aligned}\dot{W}(x) &= \left(\alpha_1 + \frac{\alpha_2}{x_1}\right)\left(-\frac{x_1}{\tau} + \frac{x_1 x_2}{\tau E_c}\right) + \left(\beta_1 + \frac{\beta_2}{x_2}\right)(a(u_0-1)x_2 - bx_1x_2) \\ &= \left(-\frac{\alpha_1}{\tau} - \beta_2 b\right)x_1 + \left(\beta_1 a(u_0-1) + \frac{\alpha_2}{\tau E_c}\right)x_2 + \left(\frac{\alpha_1}{\tau E_c} - \beta_1 b\right)x_1x_2 \\ &\quad + \beta_2 a(u_0-1) - \frac{\alpha_2}{\tau},\end{aligned} \tag{29}$$

that is equal to zero for $\alpha_1 = b$, $\alpha_2 = -a(u_0-1)$, $\beta_1 = \frac{1}{\tau E_c}$, and $\beta_2 = -\frac{1}{\tau}$. Therefore, we can rewrite (26) as

$$W(x) = bx_1 - a(u_0-1)\ln(x_1) + \frac{x_2}{\tau E_c} - \frac{\ln(x_2)}{\tau}. \tag{30}$$

Now, proceeding with the derivative of W in the direction of the system (28) for $v \neq 0$ and $\delta u \neq 0$ we obtain

$$\dot{W}(x,u) = \frac{a}{\tau}\left(\frac{x_2 - E_c}{E_c x_2}\right)\delta u + (a(u_0-1) - bx_1)\frac{x_2}{\tau}\frac{v}{E_c(E_c+v)}. \tag{31}$$

Introducing the auxiliary function

$$Q(x) = \frac{1}{2}(W(x) - W^*)^2, \tag{32}$$

where W^* is a desired level of W, which is reached provided that $Q(x(t)) \to 0$ as $t \to 0$, and calculating its derivative we have

$$\begin{aligned}\dot{Q}(x,u) = (W(x) - W^*)\frac{a}{\tau}\left(\frac{x_2 - E_c}{E_c x_2}\right)\delta u \\ + (W(x) - W^*)(a(u_0-1) - bx_1)\frac{x_2}{\tau}\frac{v}{E_c(E_c+v)},\end{aligned} \tag{33}$$

and as we can see, the system is passive without losses for $v = 0$ and $y = (W(x) - W^*)\frac{a}{\tau}\left(\frac{x_2 - E_c}{E_c x_2}\right)$.

Following the SG method, by calculating the derivative of Q with respect to δu we have

$$\frac{\partial \dot{Q}(x,u)}{\partial \delta u} = (W(x) - W^*)\frac{a}{\tau}\left(\frac{x_2 - E_c}{E_c x_2}\right), \tag{34}$$

therefore, we can choose

$$\delta u = -\gamma(W(x) - W^*)\frac{a}{\tau}\left(\frac{x_2 - E_c}{E_c x_2}\right), \tag{35}$$

where $\gamma > 0$ is a tuning gain. Then, by substituting (35) in (33) we found

$$\begin{aligned}\dot{Q}(x,u) = -\gamma\left((W(x) - W^*)\frac{a}{\tau}\left(\frac{x_2 - E_c}{E_c x_2}\right)\right)^2 \\ + (W(x) - W^*)(a(u_0 - 1) - bx_1)\frac{x_2}{\tau}\frac{v}{E_c(E_c + v)}.\end{aligned} \tag{36}$$

As in the previous example, the set of all invariant solutions of the system for $v = 0$ is given by $\mathcal{W} = \{n\} \cup \Gamma$, where $\Gamma = \{x : W(x) = W^*\}$ and n is the positive equilibrium point.

Finally, to define the robust stability properties for the controlled system let us introduce a new storage function $U(x) = \ln(1 + Q(x))$ and calculate its derivative. By this way we obtain

$$\dot{U}(x,u) = \frac{-\gamma|y|^2}{1 + Q(x)} + \frac{r(x)\sigma(v)}{1 + Q(x)}. \tag{37}$$

where $r(x) = (W(x) - W^*)(a(u_0 - 1) - bx_1)\frac{x_2}{\tau}$, and $\sigma(v) = \frac{v}{E_c(E_c + v)}$.

From (36) we can readily conclude that the weak zero-detectability property holds for the controlled system with respect to the input v (Definition 2.7). However, to provide the robust stability it is still necessary to analyze the behavior of the system for $v \neq 0$, *i.e.* verify the behavior of the functions r and σ. Figure 5 helps us to understand what is happen when x is evolving in $\mathcal{M} = \mathbb{R}^2_+$.

We can divide the analysis of r into two parts. By taking $n_1 = \frac{a(u_0 - 1)}{b}$ as a reference, one can see that the term $(a(u_0 - 1) - bx_1)x_2$ is positive when $x_1 < n_1$ and negative when $x_1 > n_1$. In another hand, $(W - W^*)$ is positive outside the closed region bounded by W^* and negative inside this region. Thus, outside of the ball in the left-hand side and inside of the ball we need to compute an upper bound of $\frac{r(x)}{1+Q(x)}$, and outside of the ball in the right-hand side this term is already negative.

Therefore, the boundedness of the second term now depends on the sign of v that already cannot be equal to $-E_c$. Thus, by assuming that

$$v(t) \geq 0 \quad \forall t \geq 0$$

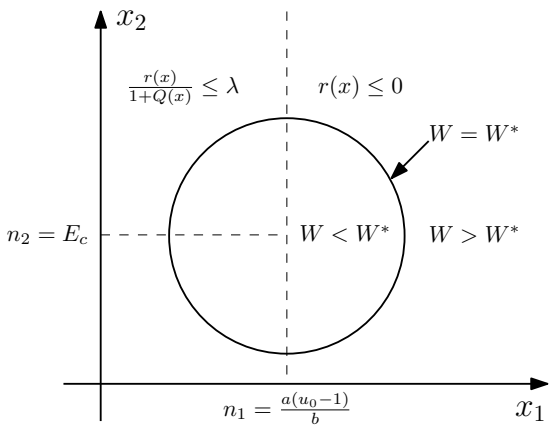

Figure 5. Scheme of the behavior of $r(x)$

we can guarantee that $\frac{r(x)}{1+Q(x)}$ is bounded:

$$\frac{r(x)}{1+Q(x)} \leq \begin{cases} 0 & \text{if } x_1 \geq n_1 \wedge W(x) \geq W^* \\ \lambda & \text{if } x_1 < n_1 \vee W(x) < W^*, \end{cases}$$

where $\lambda > 0$ is a constant and we used boundedness of x_1 and W for its computation. Therefore, under this assumption, we conclude that the smooth dissipativity property holds (Definition 2.6) for the controlled system and the controlled system is iISS by means of the property 4 from Theorem 2.9:

$$\dot{U}(x,u) \leq -\frac{\gamma|y|^2}{1+Q(x)} + \lambda\sigma(v), \tag{38}$$

which is in accordance with Theorem 4.3.

To illustrate the convergence of the system trajectories to the set $\mathcal{W}$, specifically for $W = W^*$, a desired oscillation level, we choose for the system (28) the parameters $a = 20s^{-1}$, $b = 0.4cm^3/s$, $\tau = 5 \times 10^{-3}s$, and $E_c = 5V/cm$. It is used a uniformly distributed stochastic noise with amplitude equal to 0.02 that represents 0.4% of E_c. This values were re-scaled to facilitate the result's simulation and analysis. Values in correspondence with physical parameters of the real device can be found in (Astrov et al., 2008; Kim et al., 2001). The control input applied to the system is given by

$$u = -\gamma(W(x) - W^*)\frac{a}{\tau}\left(\frac{x_2 - E_c}{E_c x_2}\right) + u_0 x_2. \tag{39}$$

where $u_0 = 2$.

As we can see in Figure 6a the system states evolves near to the equilibrium point $n = (50, 5)$ with a desired amplitude, which makes the state x_1 approximately oscillating between 49.5 and 50.5 and x_2 between 4.98 and 5.02, for that it was chosen $W^* = W(n) + 0.001$, where $W(n)$ is an energy level of the system in the equilibrium point. From Figure 6b it is possible to observe that $Q(x) \to 0$ as $t \to \infty$ for the system without disturbance, in another way, for the system with disturbances we can note that the proposed control is working to keep Q tending to zero as the time goes to infinity.

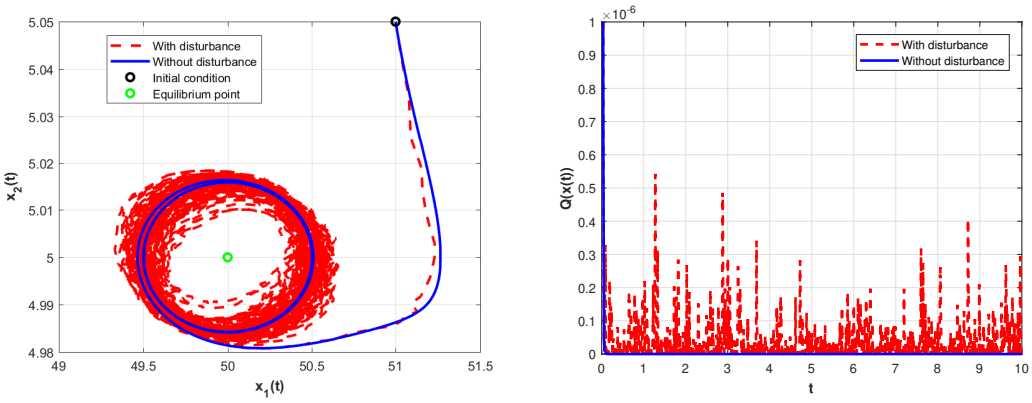

(a) (b)

Figure 6. (a) Phase portrait for the controlled system (28) without and with disturbance input (b) Behavior of the function Q

6. Conclusion

The conditions of iISS and ISS for passive and strictly passive systems have been studied in the context of multistable dynamics and correspondingly defined storage and supply functions. The proposed conditions distinguish the cases when an additional output feedback is required or not to ensure robustness against exogenous perturbations in the input channel. The obtained results was illustrated by the model of multispecies population dynamics, and in particular it was shown that if all species are controlled, then the ISS property can be recovered, but if only a part of them can be regulated, then the iISS property is guaranteed. Another example dealt with a noise-induced transition problem in a semiconductor-gas-discharge gap system, where a control transformation was necessary to change the invariant set shape to guarantee the robust stability of the system using a speed-gradient control. For future research, the development of general design methods for iISS or ISS stabilization of multistable systems will be considered.

Funding

This work was supported by the ANR project WaQMoS under Grant ANR 15 CE 04 0002. It is also partially supported by the Regional council of Hauts-de-France, and by the Government of Russian Federation under Grant 08-08.

References

Ahmed, H., Ushirobira, R., Efimov, D., & Perruquetti, W. (2016, June). Robust synchronization for multistable systems. *IEEE Transactions on Automatic Control*, *61*(6), 1625-1630.

Angeli, D. (2004). An almost global notion of input-to-state stability. *IEEE Trans. Automatic Control*, *49*, 866-874.

Angeli, D., & Efimov, D. (2015). Characterization of input-to-state stability for systems with multiple invariant sets. *IEEE Transactions on Automatic Control*, *60*, 3242-3256.

Angeli, D., Ferrell, J., & Sontag, E. (2004). Detection of multistability, bifurcations and hysteresis in a large class of biological positive-feedback systems. *Proc. Natl. Acad. Sci. USA*, *101*, 1822-1827.

Angeli, D., Sontag, E. D., & Wang, Y. (2000). A characterization of integral input-to-state stability. *IEEE Transactions on Automatic Control*, *45*, 1082-1097.

Arcak, M., & Kokotović, P. (2001). Nonlinear observers: a circle criterion design and robustness analysis. *Automatica*, *37*(12), 1923-1930.

Astrov, Y. A., Fradkov, A. L., & Guzenko, P. Y. (2008). Control of a noise-induced transition in a nonlinear dynamical system. *Physical Review*, *77*, 026201:1-7.

Barroso, F. N., Ushirobira, R., Efimov, D., & Fradkov, A. L. (2019). On robust stability of multistable passive systems. *18th European Control Conference (ECC)*, 1683-1688.

Chaves, M., Eissing, T., & Allgöwer, F. (2008). Bistable biological systems: A characterization through local compact input-to-state stability. *IEEE Transactions on Automatic Control*, *45*, 87-100.

Dashkovskiy, S. N., Efimov, D., & Sontag, E. D. (2011). Input to state stability and allied system properties. *Automation and Remote Control*, *72*, 1579-1614.

Dudkowski, D., Jafari, S., Kapitaniak, T., Kuznetsov, N. V., Leonov, G. A., & Prasad, A. (2016). Hidden attractors in dynamical systems. *Physics Reports*, *637*, 1–50.

Efimov, D. (2006). Passivity and input-to-state stability of nonlinear systems. *IFAC Proceedings Volumes*, *39*, 285-290.

Efimov, D. (2012). Global lyapunov analysis of multistable nonlinear systems. *SIAM Journal on Control and Optimization*, *50*(5), 3132-3154.

Efimov, D., & Fradkov, A. (2008). Adaptive input-to-output stabilization of nonlinear systems. *International Journal of Adaptive Control and Signal Processing*, *22*, 949-967.

Efimov, D., Schiffer, J., Barabanov, N., & Ortega, R. (2017). A relaxed characterization of iss for periodic systems with multiple invariant sets. *European Journal of Control*, *37*, 1-7.

Enciso, G., & Sontag, E. (2005). Monotone systems under positive feedback: multistability and a reduction theorem. *Systems & Control Lett.*, *54*, 159-168.

Forni, F., & Sepulchre, R. (2014). Differential analysis of nonlinear systems: Revisiting the pendulum example. In *Proc. 53rd ieee conference on decision and control* (pp. 3848–3859). Los Angeles, US.

Forni, P., & Angeli, D. (2016a). Input-to-state-stability for cascade systems with multiple invariant sets. *Systems & Control Letters*, *98*, 97-110.

Forni, P., & Angeli, D. (2016b). Output-to-state stability for systems on manifolds with multiple invariant sets. *IEEE Conference on Decision and Control*, *55*, 453-458.

Forni, P., & Angeli, D. (2017). Characterization of integral input-to-state stability for systems with multiple invariant sets. *IEEE Transactions on Automatic Control*, *62*, 3729-3743.

Fradkov, A. (2007). *Cybernetical physics: From control of chaos to quantum control.* London: Springer-Verlag.

Guckenheimer, J., & Holmes, P. (1983). *Nonlinear oscillations, dynamical systems, and bifurcations of vector fields* (Vol. 42). New York: Springer-Verlag.

Hayachi, C. (1964). *Nonlinear oscillations in physical systems.* New York: McGraw-Hill Book Company.

Hill, D., & Moylan, P. (1980). Dissipative dynamical systems: Basic input-output and state properties. *Journal of the Franklin Institute*, *309*, 327–357.

Kim, J. H. R., Maurer, H., Astrov, Y. A., Bode, M., & Purwinst, H. G. (2001). High-speed switch-on of a semiconductor gas discharge image converter using optimal control methods. *Journal of Computational Physics*, *170*, 395-414.

Laurent, M., & Kellershohn, N. (1999). Multistability: a major means of differentiation and evolution in biological systems. *Trends Biochem. Sci.*, *24*, 418-422.

Liberzon, D., Sontag, E. D., & Wang, Y. (1999). On integral-input-to-state stabilization. *Proceedings of the American Control Conference*, *3*, 1598-1602.

Nijmeijer, H., & van der Schaft, A. J. (1990). *Nonlinear dynamical control systems.* Springer-Verlag.

Nitecki, Z., & Shub, M. (1975). Filtration, decompositions, explosions. *American Journal of Mathematics*, *97*, 1029-1047.
Ortega, R., Loría, A., Nicklasson, P., & Sira-Ramirez, H. (1998). *Passivity-based control of euler-lagrange systems: Mechanical, electrical and elctromechanical aoolications.* London: Springer-Verlag.
Pchelkina, I., & Fradkov, A. L. (2012). Control of oscillatory behavior of multispecies populations. *Ecological Modelling*, *227*, 1-6.
Pisarchik, A., & Feudel, U. (2014). Control of multistability. *Physics Reports*, *540*, 167-218.
Rouche, N., Habets, P., & Laloy, M. (1977). *Stability theory by Liapunov's direct method.* New York: Springer-Verlag.
Rumyantsev, V., & Oziraner, A. (1987). *Stability and stabilization of motion with respect to part of variables.* Moscow: Nauka. ([in Russian])
Sontag, E. D. (1990). Further facts about input-to-state stabilization. *IEEE Transactions on Automatic Control*, *35*, 473-476.
Sontag, E. D. (1998). Coments on integral variants of iss. *Systems & Control Letters*, *34*, 93-100.
Sontag, E. D., & Wang, Y. (1995). On characterizations of the input-to-state stability property. *Systems & Control Letters*, *24*, 351-359.
Sontag, E. D., & Wang, Y. (1996). New characterizations of the input-to-state stability. *IEEE Transactions on Automatic Control*, *41*, 1283-1294.
Stan, G.-B., & Sepulchre, R. (2007). Analysis of interconnected oscillators by dissipativity theory. *IEEE Trans. Automatic Control*, *52*, 256-270.
Vorotnikov, V. (1998). *Partial stability and control.* Boston: Birkhauser.
Yakubovich, V., Leonov, G., & Gelig, A. (2004). *Stability of stationary sets in control systems with discontinuous nonlinearities.* Singapore: World Scientific. (in Russian)

Appendix A. Decomposition of a compact invariant set

Let $\Lambda \subset \mathcal{M}$ be a compact invariant set for the unperturbed system (3). To characterize the evolution of this system along $\mathcal{M}$, it is useful to decompose Λ and explicitly determine the existence of solutions traveling between different components of its decomposition.

Definition A.1. (Nitecki & Shub, 1975) A *decomposition* of Λ is a finite, disjoint family of compact invariant sets $\Lambda_1, \cdots, \Lambda_k$ such that

$$\Lambda = \bigcup_{i=1}^{k} \Lambda_i.$$

For an invariant set Λ, its attracting and repulsing subsets can be defined, respectively, as follows:

$$\mathfrak{A}(\Lambda) = \{x_0 \in \mathcal{M} : |x(t, x_0; 0)|_\Lambda \to 0 \text{ as } t \to +\infty\},$$
$$\mathfrak{R}(\Lambda) = \{x_0 \in \mathcal{M} : |x(t, x_0; 0)|_\Lambda \to 0 \text{ as } t \to -\infty\}.$$

Based on it, we can define a relation between two invariant sets $\mathcal{W} \subset \mathcal{M}$ and $\mathcal{D} \subset \mathcal{M}$ by $\mathcal{W} \prec \mathcal{D}$ if $\mathfrak{A}(\mathcal{W}) \cap \mathfrak{R}(\mathcal{D}) \neq \emptyset$. This relation implies that there is a solution connecting the set $\mathcal{D}$ with the set $\mathcal{W}$.

Definition A.2. (Nitecki & Shub, 1975) Let $\Lambda_1, \cdots, \Lambda_k$ be a decomposition of Λ, then

1) An *r-cycle* ($r \geq 2$) is an ordered r-tuple of distinct indices $i_1, \cdots, i_r$ such that $\Lambda_{i_1} \prec \cdots \prec \Lambda_{i_r} \prec \Lambda_{i_1}$.
2) A 1-*cycle* is an index i such that $[\mathfrak{R}(\Lambda_i) \cap \mathfrak{A}(\Lambda_i)] \setminus \Lambda_i \neq \emptyset$.
3) A *filtration ordering* is a numbering of the Λ_i so that $\Lambda_i \prec \Lambda_j \Rightarrow i \leq j$.