HAL
open science

Generalized Feedback Homogenization and Stabilization of Linear MIMO Systems*

Konstantin Zimenko, Andrey Polyakov, Denis Efimov, Wilfrid Perruquetti

To cite this version:

Konstantin Zimenko, Andrey Polyakov, Denis Efimov, Wilfrid Perruquetti. Generalized Feedback Homogenization and Stabilization of Linear MIMO Systems*. ECC 2018 - 17th European Control Conference, Jun 2018, Limassol, Cyprus. hal-01797150

HAL Id: hal-01797150

https://inria.hal.science/hal-01797150

Submitted on 22 May 2018

HAL is a multi-disciplinary open access archive for the deposit and dissemination of scientific research documents, whether they are published or not. The documents may come from teaching and research institutions in France or abroad, or from public or private research centers.

L'archive ouverte pluridisciplinaire **HAL**, est destinée au dépôt et à la diffusion de documents scientifiques de niveau recherche, publiés ou non, émanant des établissements d'enseignement et de recherche français ou étrangers, des laboratoires publics ou privés.

Generalized Feedback Homogenization and Stabilization of Linear MIMO Systems*

Konstantin Zimenko[1], Andrey Polyakov[1,2], Denis Efimov[1,2] and Wilfrid Perruquetti[2]

***Abstract*— Generalized homogenization of linear MIMO systems via linear feedback is introduced. The control algorithm for finite-time (or asymptotic) stabilization of linear MIMO systems via homogenization technique is developed. The robustness of the control algorithm with respect to system uncertainties and disturbances is studied. The theoretical results are supported by numerical examples.**

I. INTRODUCTION

The homogeneity is a property, that describes sort of symmetry, i.e. an object remains consistent with respect to a group of transformations. This property is widely used for system analysis, control and observer design (see, for example, [1]-[16]). Such an interest to the homogeneity concept is based on very useful features of homogeneous systems. In particular, local stability of homogeneous system means the global one; if an asymptotically stable system is homogeneous with negative degree, then it is finite-time stable, etc. The present paper deals with generalized homogeneity [12], [5], which is based on groups of linear transformations (linear dilations).

The present paper addresses the problem of feedback homogenization, i.e. problem of a feedback design making the system homogeneous of a given degree, and control design problem for linear MIMO plants providing asymptotic or finite-time convergence depending on the homogeneity degree of the closed-loop system. Asymptotic stabilization via homogenization with positive degree can also attract attention since such systems have a number of interesting robust properties (see, for example, the results for generalized weighted homogeneous systems [15], [16]). Unlike existing solutions, the presented results do not require special forms of the system matrix and block decomposition of linear MIMO systems (as, for example, in [7]), which in some cases can be accompanied by significant computational errors.

*The results on homogenization of linear MIMO systems presented in Section V were developed under support of RSF (grant 17-19-01422) in ITMO University. The other research were partially supported by ANR 15 CE23 0007 (Project Finite4SoS) and the Ministry of Education and Science of Russian Federation (Projects 8.8885.2017/8.9, 14.Z50.31.0031).

[1]Konstantin Zimenko, Andrey Polyakov and Denis Efimov are with Department of Control Systems and Informatics, ITMO University, 49 Kronverkskiy av., 197101 Saint Petersburg, Russia. (e-mail: kostyazimenko@gmail.com).

[2]Andrey Polyakov, Denis Efimov and Wilfrid Perruquetti are with Non-A INRIA - LNE, Parc Scientifique de la Haute Borne 40, avenue Halley Bat.A, Park Plaza 59650 Villeneuve d'Ascq (e-mail: denis.efimov@inria.fr, andrey.polyakov@inria.fr, Wilfrid.Perruquetti@inria.fr). They are also with CRIStAL (UMR-CNRS 9189), Ecole Centrale de Lille, BP 48, Cite Scientifique, 59651 Villeneuve-d'Ascq, France.

The presented control law contains two terms: a linear feedback that homogenizes the system with a specified degree and a generalized homogeneous control law, which stabilizes the system in finite time (asymptotically) if degree of homogeneity is negative (positive).

The outline of this paper is as follows. Notation used in the paper is given in Section II. Section III introduces the problem statement and the basic assumptions. Section IV considers preliminaries used in the paper. After that the results on linear MIMO system homogenization and control design are presented in Section V. Two examples are considered in Section VI. Finally, concluding remarks are given in Section VII.

II. NOTATION

Through the paper the following notation will be used:

- $\mathbb{R}_+ = \{x \in \mathbb{R} \colon x > 0\}$, where $\mathbb{R}$ is the field of real numbers;
- $\|\cdot\|$ denotes a norm in $\mathbb{R}^n$;
- $\|A\|_{\mathbb{A}} = \sup_{x\in\mathbb{R}^n} \frac{\|Ax\|}{\|x\|}$ for $A \in \mathbb{R}^{n\times n}$;
- $S = \{x \in \mathbb{R}^n \colon \|x\| = 1\}$ is the unit sphere in $\mathbb{R}^n$;
- $I_n \in \mathbb{R}^{n\times n}$ is the identity matrix;
- the minimal and maximal eigenvalues of a symmetric matrix $P = P^T$ are denoted by $\lambda_{\min}(P)$ and $\lambda_{\max}(P)$, respectively;
- the inequality $P > 0$ means that the symmetric matrix $P = P^T \in \mathbb{R}^{n\times n}$ is positive definite;
- $\Re(\lambda)$ denotes the real part of the complex number λ.

III. PROBLEM FORMULATION

Consider the system

$$\dot{x}(t) = Ax(t) + Bu(t) + \tilde{d}(t, x(t)), \tag{1}$$

where $x \in \mathbb{R}^n$ is the state vector, $u \in \mathbb{R}^m$ is the vector of control inputs, $A \in \mathbb{R}^{n\times n}$, $B \in \mathbb{R}^{n\times m}$ (the pair (A, B) is controllable, $m \le n$) are system and control gain matrices, $\tilde{d}\colon \mathbb{R} \times \mathbb{R}^n \to \mathbb{R}^n$ describes the system uncertainties and disturbances. The state vector x is assumed to be measured and can be used for feedback control design. To consider the case of discontinuous function d the theory of Filippov [17] can be utilized.

The main goal of the paper is to propose a constructive stabilizing control algorithm based on generalized homogenization of the system (1). The control must guarantee asymptotic or finite-time stability, depending on the degree of homogeneity of the closed-loop system.

IV. PRELIMINARIES

A. Stability Notions

Consider the following system

$$\dot{x}(t) = f(x(t)), \quad x(0) = x_0, \quad t \geq 0, \tag{2}$$

where $x(t) \in \mathbb{R}^n$ is the state vector, $f \in \mathbb{R}^n \to \mathbb{R}^n$ is a vector field, $f(0) = 0$. For any $x_0 \in \mathbb{R}^n$, a corresponding solution of (2) is denoted by $x(t, x_0)$. The case of the discontinuous vector field f is not excluded. In this case the system solutions $x(t, x_0)$ are understood in the sense of Filippov (see, for example, [17], [25]).

According to [17] an absolutely continuous function $x(t, x_0)$ is called a solution of the Cauchy problem associated to (2) if $x(0, x_0) = x_0$ and for almost all $t > 0$ it satisfies the following differential inclusion

$$\dot{x} \in K[f](t, x) = co \bigcap_{\varepsilon > 0} \bigcap_{\mu(N)=0} f(t, B(x, \varepsilon) \backslash N), \tag{3}$$

where $co(M)$ defines the convex closure of the set M, $B(x, \varepsilon)$ is the ball with the center at $x \in \mathbb{R}^n$ and the radius ε, the equality $\mu(N) = 0$ means that the measure of $N \subset \mathbb{R}^n$ is zero.

Definition 1 [11], [14] *The origin of (2) is said to be globally finite-time stable if it is globally asymptotically stable and any solution $x(t, x_0)$ of the system (2) reaches the equilibrium point at some finite time moment, i.e. $x(t, x_0) = 0$ $\forall t \geq T(x_0)$ and $x(t, x_0) \neq 0$ $\forall t \in [0, T(x_0))$, $x_0 \neq 0$, where $T \colon \mathbb{R}^n \setminus \{0\} \to \mathbb{R}_+$ is the settling-time function. It is fixed-time stable if in addition $\sup_{x_0 \in \mathbb{R}^n} T(x_0) = T_{\max} < +\infty$.*

Definition 2 [24] The set M is said to be globally finite-time attractive for (2) if any solution $x(t, x_0)$ of (2) reaches M in some finite time moment $t = T(x_0)$ and remains there $\forall t \geq T(x_0)$, $T \colon \mathbb{R}^n \to \mathbb{R}_+ \cup \{0\}$ is the settling-time function. It is fixed-time attractive if in addition the settling-time function $T(x_0)$ is globally bounded by some number $T_{\max} > 0$.

Theorem 1 [11], [13] *Suppose there exists a positive definite C^1 function V defined on an open neighborhood of the origin $D \subset \mathbb{R}^n$ and real numbers $C > 0$ and $\sigma \geq 0$, such that the following condition is true for the system (2)*

$$\dot{V}(x) \leq -CV^{\sigma}(x), \quad x \in D \setminus \{0\}.$$

Then depending on the value σ the origin is stable with different types of convergence:

- *if $\sigma = 1$, the origin is exponentially stable;*
- *if $0 \leq \sigma < 1$, the origin is finite-time stable and*

$$T(x_0) \leq \frac{1}{C(1-\sigma)} V_0^{1-\sigma},$$

  where $V_0 = V(x_0)$;
- *if $\sigma > 1$ the origin is asymptotically stable and, for every $\varepsilon \in \mathbb{R}_+$, the set $B = \{x \in D \colon V(x) < \varepsilon\}$ is fixed-time (independent on the initial values) attractive with*

$$T_{\max} = \frac{1}{C(\sigma - 1)\varepsilon^{\sigma - 1}}.$$

If $D = \mathbb{R}^n$ and function V is radially unbounded, then the system (2) admits these properties globally.

B. Generalized Homogeneity

The homogeneity is a property that specifies sort of symmetry of an object with respect to a group of transformations (dilation operation). The type of homogeneity, dealing with linear transformations, is called generalized homogeneity.

Definition 3 [12], [9] *A map $\mathbf{d} \colon \mathbb{R} \to \mathbb{R}^{n \times n}$ is called dilation in the space $\mathbb{R}^n$ if it satisfies:*

- ***group property:*** *$\mathbf{d}(0) = I_n$ and $\mathbf{d}(t+s) = \mathbf{d}(t)\mathbf{d}(s) = \mathbf{d}(s)\mathbf{d}(t)$ for $t, s \in \mathbb{R}$;*
- ***continuity property:*** *$\mathbf{d}$ is a continuous map;*
- ***limit property:*** *$\lim_{s \to -\infty} \|\mathbf{d}(s)x\| = 0$ and $\lim_{s \to +\infty} \|\mathbf{d}(s)x\| = +\infty$ uniformly on the unit sphere S.*

The dilation $\mathbf{d}$ is a uniformly continuous group [12]. Its generator [18] is a matrix $G_{\mathbf{d}} \in \mathbb{R}^{n \times n}$ defined by

$$G_{\mathbf{d}} = \lim_{s \to 0} \frac{\mathbf{d}(s) - I_n}{s}.$$

The generator $G_{\mathbf{d}}$ satisfies the following properties [18]

$$\frac{d}{ds}\mathbf{d}(s) = G_{\mathbf{d}}\mathbf{d}(s) = \mathbf{d}(s)G_{\mathbf{d}}, \tag{4}$$

$$\mathbf{d}(s) = e^{G_{\mathbf{d}} s} = \sum_{i=0}^{+\infty} \frac{s^i G_{\mathbf{d}}^i}{i!}, \tag{5}$$

where $s \in \mathbb{R}$.

Let us introduce the definitions on monotonicity of the dilation $\mathbf{d}(s)$.

Definition 4 [12] *The dilation $\mathbf{d}$ is said to be monotone if $\|\mathbf{d}(s)\|_{\mathbb{A}} < 1$ for $s < 0$.*

Thus, monotonicity means that $\mathbf{d}(s)$ is strong contraction for $s < 0$ (strong expansion for $s > 0$) and implies that for any $x \in \mathbb{R} \setminus \{0\}$ there exists a unique pair $(s_0, x_0) \in \mathbb{R} \times S$ such that $x = \mathbf{d}(s_0)x_0$. The rate of contraction is introduced by the next definition.

Definition 5 [9], [5] *The dilation $\mathbf{d}$ is said to be strictly monotone if $\exists \beta$ such that $\|\mathbf{d}(s)\|_{\mathbb{A}} \leq e^{\beta s}$ for $s \leq 0$.*

Note [9], that monotonicity property may depend on a norm $\|\cdot\|$.

Theorem 2 [5] *If $\mathbf{d}$ is a dilation in $\mathbb{R}^n$, then*

- *the generator matrix $G_{\mathbf{d}}$ is anti-Hurwitz, i.e. $\Re(\lambda_i) > 0$, $i = 1, ..., n$;*
- *there exists a symmetric matrix $P \in \mathbb{R}^{n \times n}$ such that*

$$PG_{\mathbf{d}} + G_{\mathbf{d}}^T P > 0, \quad P > 0. \tag{6}$$

- *the dilation $\mathbf{d}$ is strictly monotone with respect to the weighted Euclidean norm $\|x\| = \sqrt{x^T P x}$ for $x \in \mathbb{R}^n$ and P satisfying (6):*

$$e^{\alpha s} \leq \|\mathbf{d}(s)\|_{\mathbb{A}} \leq e^{\beta s} \quad if \quad s \leq 0,$$

$$e^{\beta s} \leq \|\mathbf{d}(s)\|_{\mathbb{A}} \leq e^{\alpha s} \quad if \quad s \geq 0,$$

  where $\alpha = \frac{1}{2}\lambda_{\max}\left(P^{\frac{1}{2}} G_{\mathbf{d}} P^{-\frac{1}{2}} + P^{-\frac{1}{2}} G_{\mathbf{d}}^T P^{\frac{1}{2}}\right)$, $\beta = \frac{1}{2}\lambda_{\min}\left(P^{\frac{1}{2}} G_{\mathbf{d}} P^{-\frac{1}{2}} + P^{-\frac{1}{2}} G_{\mathbf{d}}^T P^{\frac{1}{2}}\right)$.

Definition 6 [12] *A vector field $f\colon \mathbb{R}^n \to \mathbb{R}^n$ (a function $g\colon \mathbb{R}^n \to \mathbb{R}$) is said to be $\mathbf{d}$-homogeneous of degree $\nu \in \mathbb{R}$ if*

$$f(\mathbf{d}(s)x) = e^{\nu s}\mathbf{d}(s)f(x), \quad \forall x \in \mathbb{R}^n \setminus \{0\}, \quad \forall s \in \mathbb{R}.$$
$$(\textit{resp. } g(\mathbf{d}(s)x) = e^{\nu s}g(x), \quad \forall x \in \mathbb{R}^n \setminus \{0\}, \quad \forall s \in \mathbb{R}.) \tag{7}$$

A special case of homogeneous function is a homogeneous norm [10], [5]: a continuous positive definite $\mathbf{d}$-homogeneous function of degree 1. Define the canonical homogeneous norm $\|\cdot\|_{\mathbf{d}}\colon \mathbb{R}^n \to \mathbb{R}_+$ as $\|x\|_{\mathbf{d}} = e^{s_x}$, where $s_x \in \mathbb{R}$ such that $\|\mathbf{d}(-s_x)x\| = 1$. Note that $\|\mathbf{d}(s)x\|_{\mathbf{d}} = e^s\|x\|_{\mathbf{d}}$ and

$$\|\mathbf{d}(-\ln\|x\|_{\mathbf{d}})x\| = 1. \tag{8}$$

Theorem 3 [5] *An asymptotically stable $\mathbf{d}$-homogeneous system $\dot{x} = f(x)$, $f\colon \mathbb{R}^n \to \mathbb{R}^n$ of degree $\nu \in \mathbb{R}$ is finite-time stable if and only if $\nu < 0$.*

C. On the Matrix Equation $X\bar{A} - \bar{A}X = X$

Let us consider the matrix equation

$$X\bar{A} - \bar{A}X = X. \tag{9}$$

The following results hold true.

Proposition 1 [19] *Let $\bar{A} \in \mathbb{R}^{n\times n}$. Then every matrix solution $X \in \mathbb{R}^{n\times n}$ of the equation $X\bar{A} - \bar{A}X = X$ is nilpotent and hence satisfies $X^n = 0$.*

Note, that the linear matrix equation (9) is a special case of the Sylvester matrix equation. The general solution of the matrix equation is given in [20].

In solving the inverse problem (search for the matrix $\bar{A}$ for given X), the following result is valid.

Proposition 2 *For any nilpotent matrix $X \in \mathbb{R}^{n\times n}$ the equation (9) has a solution.*

Proofs of all propositions are skipped.

V. MAIN RESULT

The following lemma gives the condition of the linear system to be $\mathbf{d}$-homogeneous with the generator $G_{\mathbf{d}}$.

Lemma 1 *Let $G_{\mathbf{d}} \in \mathbb{R}^{n\times n}$ be a generator of the dilation $\mathbf{d}(s) = e^{G_{\mathbf{d}}s}$, $s \in \mathbb{R}$. Then the linear system $\dot{x} = Cx$, $x \in \mathbb{R}^n$, $C \in \mathbb{R}^{n\times n}$ is $\mathbf{d}$-homogeneous of degree $\nu \in \mathbb{R}$ if and only if*

$$CG_{\mathbf{d}} - G_{\mathbf{d}}C = \nu C. \tag{10}$$

Based on Proposition 1 and Lemma 1 it can be shown that the system (1) with $\tilde{d}(t,x) = 0$ can be homogenized by a linear control $u = K_0x$.

Lemma 2 *Let $A + BK_0$ be nilpotent for $K_0 \in \mathbb{R}^{m\times n}$. Then for any $\nu \in \mathbb{R}$ there exists a matrix $G_{\mathbf{d}}$ such that the system (1) with $\tilde{d}(t,x) = 0$ and $u = K_0x$ is $\mathbf{d}$-homogeneous of degree ν.*

Further, these results are utilized for control design of the system (1).

Theorem 4 (Disturbance-free case) *Let $\tilde{d}(t,x) = 0$ and*

- *for some $\nu \geq -1$ the system of matrix equations and inequalities*

$$(A+BK_0)X+X(A+BK_0)^T+By+y^TB^T+\alpha X \leq 0, \tag{11}$$

$$(A+BK_0)L - L(A+BK_0) = (A+BK_0), \tag{12}$$

$$(L-\gamma I)B = 0, \tag{13}$$

$$X > 0, \tag{14}$$

is feasible, where the matrix $K_0 \in \mathbb{R}^{m\times n}$ is such that the matrix $A + BK_0$ is nilpotent, $L, X \in \mathbb{R}^{n\times n}$, $y \in \mathbb{R}^{m\times n}$, $\alpha \in \mathbb{R}_+$, $\gamma \in \mathbb{R}$;

- *the control has the form*

$$u(x) = K_0x + \|x\|_{\mathbf{d}}^{\nu(1+\gamma)+\epsilon}K\mathbf{d}(-\ln\|x\|_{\mathbf{d}})x, \tag{15}$$

where $K = yP$, $P = X^{-1}$ and $\epsilon \in \mathbb{R}_+$ is chosen such that

$$\nu L + \nu L^T + 2\epsilon I_n > 0, \tag{16}$$

$$\eta X \geq \nu LX + \nu XL^T + 2\epsilon X > 0 \tag{17}$$

for some $\eta \in \mathbb{R}_+$.

Then the closed-loop system (1), (15) is asymptotically (for $\nu > 0$) / exponentially (for $\nu = 0$) / finite-time (for $0 > \nu \geq -1$) stable.

Remark 1 Obviously, the case $\nu = 0$ is out of interest since in this case the task reduces to the standard linear control design problem.

Remark 2 According to Theorem 1 for $0 > \nu \geq -1$ the settling time function is bounded as follows

$$T(x_0) \leq -\frac{\eta}{\alpha\nu}V_0^{-\nu},$$

for $\nu > 0$ and any $\varepsilon \in \mathbb{R}_+$, the set $B = \{x \in \mathbb{R}^n\colon V(x) < \varepsilon\}$ is fixed-time attractive with

$$T_{\max} = \frac{\eta}{\alpha\nu\varepsilon^{\nu}}.$$

Remark 3 The canonical homogeneous norm $\|\cdot\|_{\mathbf{d}}$ (Lyapunov function V) is defined implicitly by (8). To find $\|\cdot\|_{\mathbf{d}}$ the numerical procedures can be used, as, for example, in [7] the bisection method has been applied to find implicitly defined Lyapunov function.

Note, that implicit Lyapunov function method was introduced by Korobov in [22], [23] for the first time.

Remark 4 The feedback matrix K_0 can be chosen using pole placement methods.

The following theorem presents the modification of the control scheme from Theorem 4 to reject some additive disturbances.

Theorem 5 (Disturbed case) *Let $\nu \geq -1$ and*

- *the system (12)-(14),*

$$(A+BK_0)X+X(A+BK_0)^T+By+y^TB^T+\alpha X+R \leq 0, \tag{18}$$

is feasible, where the matrix $K_0 \in \mathbb{R}^{m\times n}$ is such that the matrix $A + BK_0$ is nilpotent, $R, L, X \in \mathbb{R}^{n\times n}$, $R > 0$, $y \in \mathbb{R}^{m\times n}$, $\alpha \in \mathbb{R}_+$, $\gamma \in \mathbb{R}$;

- *the control has the form (15) with $K = yP$, $P = X^{-1}$ and $\epsilon, \eta \in \mathbb{R}_+$ satisfying the inequalities (16), (17);*
- *the disturbance function $\tilde{d}$ satisfy*

$$\tilde{d}^T \mathbf{d}^T(-\ln\|x\|_{\mathbf{d}})R^{-1}\mathbf{d}(-\ln\|x\|_{\mathbf{d}})\tilde{d} \le \zeta\alpha\|x\|_{\mathbf{d}}^{2\nu}, \tag{19}$$

with $\zeta \in (0,1)$.

Then the closed-loop system (1), (15) is asymptotically (for $\nu > 0$) / exponentially (for $\nu = 0$) / finite-time (for $0 > \nu \ge -1$) stable.

Remark 5 The restriction on the system disturbances (19) is presented in the form, which is not appropriate for using in practice. It can be simplified using the result of Proposition 16 in [7] if $G_{\mathbf{d}}$ is presented in a diagonal form. Simplification and relaxation of the restriction (19) may be one of the directions for future research.

VI. NUMERICAL EXAMPLES

A. Finite-time stabilization of linear MIMO system

Consider the system (1) in disturbance-free case ($\tilde{d}(t,x) = 0$) for $n = 3$,

$$A = \begin{pmatrix} 3 & 1 & 0 \\ 0 & 2 & 1 \\ 1 & 0 & 0 \end{pmatrix} \quad \text{and} \quad b = \begin{pmatrix} 1 & 1 \\ 0 & 0 \\ 0 & 1 \end{pmatrix}.$$

Define the finite-time control u in the form (15) with the parameter $\nu = -0.5$, where the matrix $K_0 \in \mathbb{R}^{2\times 3}$ is chosen

$$K_0 = \begin{pmatrix} -2 & -5.9442 & -2.4721 \\ -1 & -4 & -2 \end{pmatrix}$$

that the matrix $A + BK_0$ is nilpotent and the matrices $P \in \mathbb{R}^{3\times 3}$, $K \in \mathbb{R}^{2\times 3}$ are obtained from the inequalities (11)-(14), (16), (17) with the parameters $\alpha = 1$, $\eta = 3.4182$:

$$P = \begin{pmatrix} 0.0392 & 0 & 0 \\ 0 & 0.6458 & 0.1199 \\ 0 & 0.1199 & 0.0466 \end{pmatrix},$$

$$K = \begin{pmatrix} -14.323 & 55.9463 & 19.8991 \\ 0.8963 & -49.7414 & -16.4913 \end{pmatrix},$$

$$G_{\mathbf{d}} = \begin{pmatrix} 1.0001 & -2.2361 & 0 \\ 0 & 1.5001 & 0 \\ 0 & -1 & 1.0001 \end{pmatrix}$$

and $\gamma = 0.25$, $\epsilon = 1.1251$.

The numerical simulation of the closed-loop system has been done for $x_0 = \begin{pmatrix} -1 & 5 & -1 \end{pmatrix}^T$ by the Euler method with the fixed step size $h = 0.01$. To find values of $\|\cdot\|_{\mathbf{d}}$ the bisection method was used. The results of simulation are shown in Fig. 1, Fig. 2.

B. Robust finite-time control of damper system

Consider a mass/spring/damper system [21] as shown in Fig. 3, where

$$A = \begin{pmatrix} 0 & 0 & 1 & 0 \\ 0 & 0 & 0 & 1 \\ -\frac{k_1}{m_1} & \frac{k_1}{m_1} & -\frac{b_1}{m_1} & \frac{b_1}{m_1} \\ \frac{k_1}{m_2} & -\frac{k_1+k_2}{m_2} & \frac{b_1}{m_2} & -\frac{b_1+b_2}{m_2} \end{pmatrix},$$

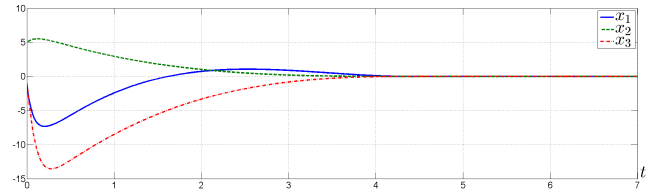

Fig. 1. System states versus time for finite-time control in disturbance-free case

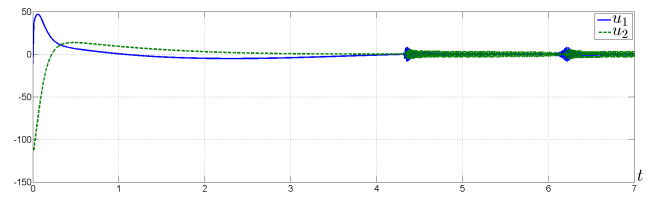

Fig. 2. Control inputs versus time

$$B = \begin{pmatrix} 0 & 0 \\ 0 & 0 \\ \frac{1}{m_1} & 0 \\ 0 & \frac{1}{m_2} \end{pmatrix},$$

$\tilde{d}(t,x) = \begin{pmatrix} 0 & 0 & 0.8\sin(4t) & 0.5\sin(2t) \end{pmatrix}^T$, $k_1 = 1$, $k_2 = 4$, $b_1 = 0.2$, $b_2 = 0.1$, $m_1 = 1$, $m_2 = 2$ of appropriate units.

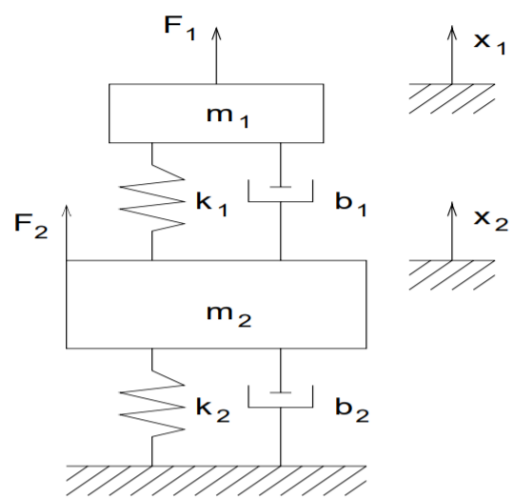

Fig. 3. A two-mass/spring/damper system

The parameters of the control in the form (15) were selected solving the system (12)-(14), (18), (16), (17) for

$$K_0 = \begin{pmatrix} -1 & 1 & -0.2 & 0.2 \\ 1 & -5 & 0.2 & -0.3 \end{pmatrix},$$

$\alpha = 1$, $\eta = 2.0858$, $R = I_n$:

$$P = \begin{pmatrix} 0.1252 & 0 & 0.0586 & 0 \\ 0 & 0.1252 & 0 & 0.0586 \\ 0.0586 & 0 & 0.0666 & 0 \\ 0 & 0.0586 & 0 & 0.0666 \end{pmatrix},$$

$$K = \begin{pmatrix} -3.4471 & 0 & -2.7827 & 0 \\ 0 & -6.8943 & 0 & -5.5655 \end{pmatrix},$$

$$G_{\mathbf{d}} = \begin{pmatrix} 0.9214 & 0 & 0 & 0 \\ 0 & 0.9214 & 0 & 0 \\ 0 & 0 & 0.1214 & 0 \\ 0 & 0 & 0 & 0.1214 \end{pmatrix}$$

and $\gamma = 0.4$, $\epsilon = 0.4414$.

Assume that the system operates in $\Omega = \{x \in \mathbb{R}^n \colon \|x\|_{\mathbf{d}} \leq 1\}$. In this case the inequality (19) can be rewritten as

$$\tilde{d}^T \tilde{d} \leq \zeta \|x\|_{\mathbf{d}}^{-1.3572}$$

and it holds for $\zeta = 0.89$.

The numerical simulation shown in Fig. 4 has been done for $x_0 = \begin{pmatrix} 1 & -0.8 & -2 & -1.5 \end{pmatrix}^T$ by the Euler method with the fixed step size $h = 0.001$.

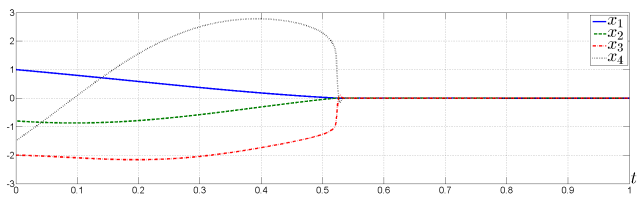

Fig. 4. System states versus time for finite-time control of the spring system

VII. CONCLUSIONS

The paper presents homogenizing and stabilizing control algorithms for linear MIMO systems. It is shown that the system (1) can be homogenized with any degree via linear feedback. The settling time estimate is obtained for finite-time stabilized system. Tuning of control parameters is presented in the form of linear matrix equations and inequalities. The robustness of the control algorithm with respect to system uncertainties and disturbances is studied. Numerical examples demonstrate the effectiveness of proposed control.

REFERENCES

[1] E. Moulay, W. Perruquetti, Finite-time stability and stabilization: State of the art, Lecture Notes in Control and Information Sciences, vol. 334, pp. 23–41, 2006.

[2] V. I. Zubov, On systems of ordinary differential equations with generalized homogenous right-hand sides, Izvestia vuzov. Mathematica, vol. 1, pp. 80–88, 1958 (in Russian).

[3] V. V. Khomenuk, On systems of ordinary differential equations with generalized homogeneous right-hand sides, Izvestia vuzov. Mathematica, vol. 3(22), pp. 157–164, 1961 (in Russian).

[4] A. Levant, Homogeneity approach to high-order sliding mode design, Automatica, vol. 41, pp. 823–830, 2005.

[5] A. Polyakov, Sliding Mode Control Design Using Canonical Homogeneous Norm, Int. J. Robust. Nonlinear Control, pp. 1–20, 2018.

[6] V. I. Zubov, Methods of A.M. Lyapunov and Their Applications, Noordhoff, Leiden, 1964.

[7] A. Polyakov, D. Efimov, W. Perruquetti, Robust Stabilization of MIMO Systems in Finite/Fixed Time, Int. J. Robust. Nonlinear Control, vol. 26(1), pp. 69–90, 2016.

[8] A. Bacciotti, L. Rosier, Lyapunov Functions and Stability in Control Theory, Springer, 2005.

[9] A. Polyakov, J.-M. Coron, L. Rosier, On finite-time stabilization of evolution equations: A homogeneous approach, in Proceedings of 55th Conference on Decision and Control (CDC), pp. 3143–3148, 2016.

[10] M. Kawski, Geometric Homogeneity and Stabilization, in Proc. IFAC Nonlinear Control Symposium, A. Krener and D. Mayne, Eds., Lake Tahoe, CA, pp. 164–169, 1995.

[11] S. Bhat, D. Bernstein, Finite-time stability of continuous autonomous systems, SIAM Journal of Control and Optimization, vol. 38(3), pp. 751–766, 2000.

[12] A. Polyakov, D. Efimov, E. Fridman, W. Perruquetti, On Homogeneous Distributed Parameter Systems, IEEE Transactions on Automatic Control, vol. 61(11), pp. 3657–3662, 2016.

[13] S. Laghrouche, M. Harmouche, Y. Chitour, Stabilization of perturbed integrator chains using Lyapunov-Based Homogeneous Controllers, International Journal of Control, pp. 1–10, 2016.

[14] Y. Orlov, Finite Time Stability and Robust Control Synthesis of Uncertain Switched Systems, SIAM Journal of Control and Optimization, vol. 43(4), pp. 1253–1271, 2004.

[15] E. Bernuau, A. Polyakov, D. Efimov, W. Perruquetti, Verification of ISS, iISS and IOSS properties applying weighted homogeneity, System and Control Letters, vol. 62, no. 12, pp. 1159–1167, 2013.

[16] D. Efimov, A. Polyakov, W. Perruquetti, J.-P. Richard, Weighted homogeneity for time-delay systems: Finite-time and independent of delay stability, IEEE Trans. Automatic Control, vol. 61(1), pp. 210–215, 2016.

[17] A. F. Filippov, Differential equations with discontinuous right-hand sides, Kluwer, Dordrecht, 1988.

[18] A. Pazy, Semigroups of Linear Operators and Applications to Partial Differential Equations, Springer, 1983.

[19] D. Burde, On the Matrix Equation $XA - AX = X^P$, Linear Algebra and its Applications vol. 404, pp. 147–165, 2005.

[20] F. R. Gantmacher, The theory of matrices, AMS Chelsea Publishing, Providence, RI, 1998.

[21] K. Zhou, J. C. Doyle, Essentials of Robust Control, Prentice-Hall, Inc., 1998.

[22] V. I. Korobov, A general approach to synthesis problem, Doklady Academii Nauk SSSR, vol. 248, pp. 1051–1063, 1979.

[23] V. I. Korobov, A general approach to the solution of the bounded control synthesis problem in a controllability problem, Mathematics of the USSR-Sbornik, vol. 37, pp. 535–557, 1980.

[24] A. Polyakov, Nonlinear Feedback Design for Fixed-Time Stabilization of Linear Control Systems, IEEE Transactions on Automatic Control, vol. 57(8), pp. 2106–2110, 2012.

[25] G. Smirnov, Introduction to the Theory of Differential Inclusions, AMS, 2002.