HAL open science

Investigations on Laterotactile Braille Reading

Anupama Thomas, Elizabeth Rufus

To cite this version:

Anupama Thomas, Elizabeth Rufus. Investigations on Laterotactile Braille Reading. 16th IFIP Conference on Human-Computer Interaction (INTERACT), Sep 2017, Bombay, India. pp.196-204, 10.1007/978-3-319-67744-6_13 . hal-01676153

HAL Id: hal-01676153

https://inria.hal.science/hal-01676153v1

Submitted on 5 Jan 2018

HAL is a multi-disciplinary open access archive for the deposit and dissemination of scientific research documents, whether they are published or not. The documents may come from teaching and research institutions in France or abroad, or from public or private research centers.

L'archive ouverte pluridisciplinaire **HAL**, est destinée au dépôt et à la diffusion de documents scientifiques de niveau recherche, publiés ou non, émanant des établissements d'enseignement et de recherche français ou étrangers, des laboratoires publics ou privés.

Distributed under a Creative Commons Attribution 4.0 International License

Investigations on Laterotactile Braille Reading

Anupama Thomas,Elizabeth Rufus

School of Electronics,VIT University,Vellore,Tamilnadu,India.
{anupama.mathew2014,elizabethrufus}@vit.ac.in

Abstract. Unlike sighted readers who read whole words at a glance, braille readers construct words sequentially processing them character by character as their tactual field of view is small. Using this aspect of braille reading, we conducted an experimental study to investigate whether nonsensical characters moving under the reading finger would be a hindrance in reading words .We used a prototype to display braille with a single actuator .There is a lateral presentation of text to the user using a 3D printed braille embossed disc which rotates under the reading finger of the blind person. Preliminary test results indicate that users can read words even as nonsensical letters brush past the reading finger. This feature has implications in the design of a cost effective braille display.

Keywords. Braille display; lateral presentation

1 Introduction

Much research has gone into studying aspects of braille reading and also designing braille displays for visually impaired people. A braille cell in its standard format can be a 6 dot cell with the dots arranged in 2 columns of 3 dots each or an 8 dot cell, with 2 columns of 4 dots each. Generally braille is presented in two ways to the user 1) static raised dot display (where actuators move up and down below the reading finger of the user) and 2) a lateral presentation of text to the user where there is a continuous slip between the reading finger and the surface of the dots. There are also the alternate methods of presenting braille to users where the users receive vibrations to indicate the position of dots in a braille cell. In these alternate modes of displaying braille as seen in [1] the standard 6 dot format is not adhered to with regards to the arrangement of dots and the spacing between the dots. These alternate methods seem to be effective in the presentation of short texts to the user. Fig.1 shows various divisions of research in the area of braille displays based on the way the skin of the reading finger is stimulated. Commercially available refreshable braille readers are very expensive mainly because an actuator is needed for each dot of the braille cell, each braille cell consisting of 6 or 8 dots. Therefore a number of actuators would be required for a single line of Braille text. Various actuators such as Electro Active Polymers (EAP), Shape Memory Alloys (SMA), and piezo- electric actuators have been used in the research and development of braille readers as in [2]. But at present, most commercially available braille displays

use piezoelectric actuators. To reduce the costs of braille readers, researchers have gone into making single cell readers where only one cell is presented at a time to the user.

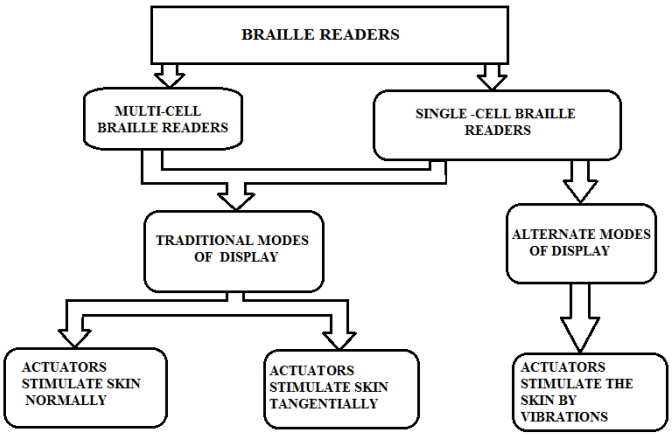

Fig. 1. Various divisions of research in braille displays

Also due to the high costs of braille readers, many visually impaired users switch to accessing data from a computer via screen readers which are more affordable and easily available in developing countries. Our work lies in the area where there is a lateral presentation of braille text to the user i.e. the actuators stimulate the skin of the reading finger tangentially. The goal of our work is to test whether blind users are able to read braille words even when non-sensical letters pass under the reading finger. We are evaluating this feature through a proof of concept prototype. The remainder of the paper is organized into four sections. Section 2 looks specifically at several aspects of braille reading which have been studied and specifically braille technologies which involve lateral movement between the actuators and the reading finger. Section 3 looks at our experimental protocol and the results. Section 4 and 5 deal with discussions and conclusions respectively.

2 Background

2.1 Features of braille-reading

In [3] Foulke conducted extensive studies to examine braille reading and explored the possibilities of improving the reading rate of braille readers. He was interested in the legibility of braille characters and words formed by them. Experiments were conducted to find how long it took to recognize a braille character and whether certain braille characters took longer to be identified than others. He also subjected visual readers to

the same reading conditions as braille readers i.e. viewing one character at a time and concluded that the speed of visual readers and braille readers would be similar if both were subjected to reading braille and print under similar conditions. These results were supported by [4] who conducted similar tests. They also suggested the use of characters per second as an appropriate measure of braille reading speed as word length is variable. In a comparative study of braille and letters, Loomis, in [5] studied the tangibility of letters and braille and suggested that braille dots were more perceptible than letters. However similar studies by Heller [6], where braille, letters and the Morse code were compared, found that with unrestricted exploration, there was similar performance in the recognition of braille and letters. In more recent studies [7], aspects of braille reading, such as the differences in static and sliding indentation to the finger reading braille were studied on 4 participants under different display and proprioceptive conditions. Their experimental design had two display types (static and sliding) and two proprioceptive conditions (proprioceptive and non-proprioceptive). The study suggested that the lack of sliding contact between the reading surface and the reading finger diminishes the accuracy of reading.

2.2 Latero-tactile Braille technologies

Progressive waves of deformations were fed tangentially to the skin of the reading finger by a device and this effect was studied on the ability of a user to read truncated braille characters. This was compared to reading the conventional braille medium [8].The design further emerged as the STRESS2 tactile transducer that has 10-by- 6 contactors which deliver tangential forces to the skin [9]. Displaying complete 6 dot braille was explored using this device. However reading strings of disconnected letters was difficult though possible. Reading familiar words were faster and more accurate. Earlier designs which allowed for lateral deformation of the fingertip included the rotating wheel braille display [10,11].The rotating wheel design [10] used fewer actuators (3 actuators for 6 dot braille, 4 for 8 dot braille) in a compact volume having a drum with a small diameter. The pins would be set just before it entered into the reading area of the device which was under the users' primary reading finger. This device however occurred at constant speeds and did not accommodate reversals. Also, performance assessment of the device was not fully investigated with visually challenged users. Tactile Mice have been designed where both tactile and thermal feedback have been provided [12].Users are able to distinguish material surface by getting temperature feedback. The tactile feedback is provided by 30 piezo-electric bimorphs. Other similar tactile -mice have been developed for research purposes. Earlier tape displays such as Grundwald's belt device [13] had a bubbled tape loop into which protrusions could be punched by actuators.

3 Method

3.1 Apparatus

In our present work, we want to investigate whether a visually-impaired user can read words even though non-sensical letters pass under the reading finger. We have adopted a laterotactile presentation of text to the user in our study due to the reasons presented in [7], [14], namely that single cell displays must involve sliding contact for more effective braille reading. The apparatus consists of a tactile display (braille embossed disc) mounted on the shaft of a stepper motor and the interfacing driving electronics (control system) which is placed in an enclosure as seen in Fig. 3. In this method of presentation, the reading finger is stationary while the text changes underneath it. The enclosure bears the weight of the hand resting on it while the reading finger is placed on the disc.

- **Tactile Display**
  The embossed disc is 3D printed and made of ABS (Acrylonitrile Butadiene Styrene) plastic. It is an opaque thermoplastic and amorphous polymer. With a width, s, of 5mm assigned to each braille cell and $\Theta = 28.8^{\circ}$, the radius of the disc was calculated is 20mm as in (1).

$$s = r \times \theta \qquad (1)$$

  The disc has a width of 10 mm as in Fig.2, and is comfortable for the users to place their reading finger on. It had 25 braille letters embossed around its circumference with a braille letter placed every 14.4^{0}. The height of the braille dots were 0.9mm and the width was 1.4mm in accordance with the standard values [15]. As preliminary testing with the visually challenged user showed that the braille characters were too close to each other, the disc was modified with only alternate braille characters embossed i.e. a braille character was embossed every $28.8\ ^{0}$(16 steps). As a result only 12 braille characters could be presented to the user. The results of testing with 12 braille characters are documented in our results. The disc is mounted on the motor shaft and rotates by different angles according to the letter pressed on the keyboard of the laptop.

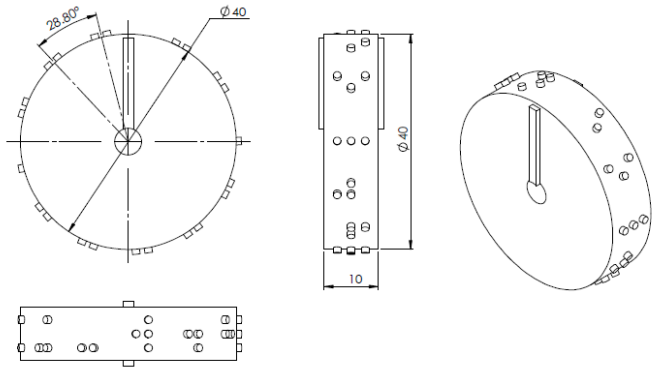

Fig.2. Modified 12 letter embossed disc (dimensions in mm)

- **Control System**

  The core of this prototype uses the TM4C123GH6PM microcontroller which is ARM Cortex-M4F based processor core. It runs on 3.3V at 16MHz via the regulator, 3.3 V, 400 mA, LDO Texas Instruments TPS73633DRBT which receives 5V supply from the USB port of the laptop. It has a UART port running over the USB cable. A booster pack was designed to fit the launch pad vertically. The booster pack includes a DC jack to get power supply from a 12V, 2A SMPS adapter. The booster pack has the driving electronics to drive the stepper motor according to the pulses received via the microcontroller. Characters are transmitted at a baud rate of 115200 using a serial terminal program from the laptop. The control of the motor at present is open-loop. The stepper motor is rated at 12V with a step angle of 1.8 degrees. It has 4 phases with a holding torque of 3.1kgcm.The motor weighs 220gms.It is programmed to run in the unipolar, full stepping sequence. The stepper motor has a speed of 150 rpm .With a speed of 150 rpm, 400ms is the maximum time it will take to display character separated by a full 360^0.We understand that the reading speed is limited by rotation speed of the motor. Choosing a motor with faster rpm, will increase the ability of the device to display characters faster. Also embossing characters closer to each other will reduce the delays between the appearances of letters.

3.2 Participants

Two visually challenged volunteers (both females) participated in the experiment (mean age 35 years, range 25-45).All of them had no other impairments and their right index finger was their primary reading finger. User 1 was adept in English braille with 40 years of experience while User 2 had just 5 years in learning English braille. The preliminary findings are based on data from these two participants.

3.3 Experimental settings

The prototype device we used for the study was placed on the table at the side of a laptop during testing. The participants were instructed to place their hand on the device with their primary reading finger placed on the disc as in Fig. 3.Since the users palm rested on the enclosure, the weight of the hand did not stop the disc as it rotated. The finger rested lightly on the disc as the enclosure bore most of the weight of the hand. In our technique of presenting words to the users, the display of words is character by character, via hyper terminal to the blind user by the experimenter. As the experimenter presses a key, the stepper motor rotates through a corresponding specific angle, bringing the letter right under the reading finger of the user, while non-sensical letters brush past the reading finger. The user reads the character just under their reading finger. The letter is held under the reading finger, till the next letter is sent via uart. If a character could not be understood, they were instructed to say 'Pass' so that the experimenter could send the next letter. The user was initially allowed to feel the device and the embossed braille disc. The reading finger that was placed over the disc could move over the embossed character both vertically and horizontally if the user felt the need to, otherwise it was held over the disc while the disc rotated below it. Three sets of 36 randomly assorted words (2-letter, 3-letter, 4-letter words) were presented to the user as Trial1, Trial2 and Trial3 in two sessions, Session1 and Session2. The accuracy of reading out words in a minute was recorded and the mean speed of the three trials (in cps-characters per second) per session was noted. We specifically use character per second as metric of reading speed as words differ in length and a braille cell is a basic unit in reading braille [4]. Since the users are not native English speakers, we assessed their accuracy and speed on a printed braille sheet which had similar two, three and four lettered words. Both readers were asked to read from the experimental set-up in the same way they read from paper braille. The accuracy and speed on both paper braille and our apparatus was then compared. For both paper braille and in the experimental set up, their mean speeds of 3 trials in each session were noted.

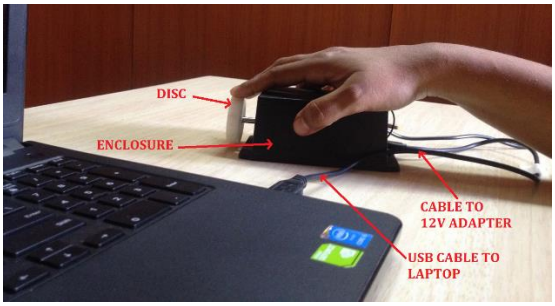

Fig.3. Experimental set-up

3.4 Results

User 1 and User 2 differ in their proficiency of English .This is seen even as we compare their performance on paper Braille as in Table1. User 1 who is experienced with English had a noticeable decrease in speed when reading words in our experimental set up. Yet there was a slight increase in speed in the 2nd session of testing as seen in Fig.4. Verbal reports from User 1 suggested that if she spent more time adapting herself to reading in this manner, she would read faster. There was a minimal increase in speed for both users in session2.This suggests an increase in speed with practice.

Table 1. Speed in cps for User1 and User2

	Paper Braille	Session1	Session2
User1	2.6	0.51	0.59
User2	0.36	0.37	0.38

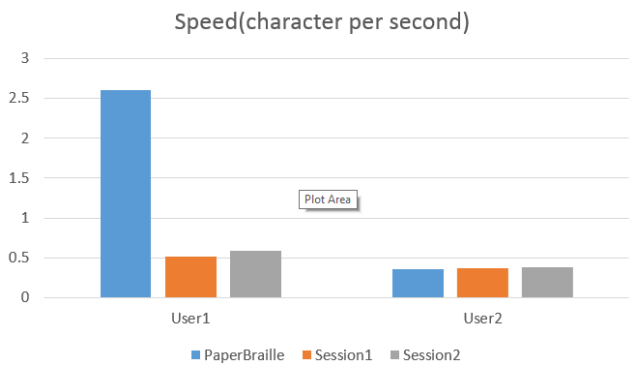

Fig. 4. Comparison of speeds between users on paper braille and the experimental set- up

The accuracy of both users on paper braille and the experimental set up were similar. This indicates that reading using this technique is viable.

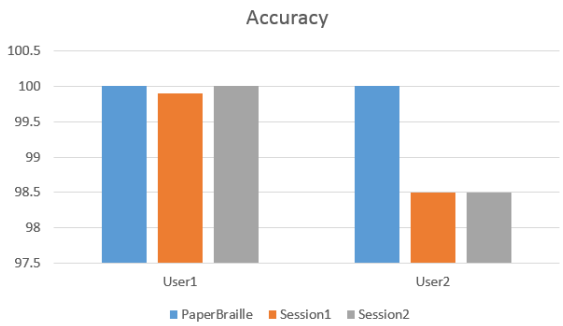

Fig. 5. Comparison of accuracy between users on paper braille and the experimental set- up

4 Discussion

The standard braille reading rates for skilled readers are approximately 125 words per minute equivalent to 7.5cps [4].Since our users are not native English speakers we assessed their paper braille reading speeds. A comparison of the results on paper and our apparatus indicate that even though other letters brush under the finger, reading is possible as the user reads the letter that finally stops under the reading finger. Also, in words such as 'L-O-O-K', the largest time delay, as seen in Fig.6 would be between the appearance of the consecutive letter 'o' under the reading finger as the disc would need to rotate a full 360^0 to come back to letter 'o' again.

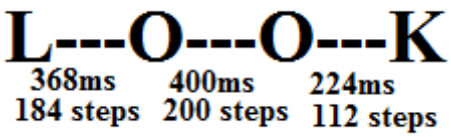

Fig. 6. Time in milli-seconds between the appearances of letters.

Braille characters under the reading finger move in an anti-clockwise direction as that is the conventional way braille is read. Therefore the embossed disc rotates only in the counter clockwise direction beneath the reading finger. The embossed braille characters are arranged at random along the perimeter of the disc. We interspersed vowels and consonants as words are generally constituted by both of them. Therefore the number of steps between the letters depends on the arrangement of letters along the disc circumference. In this disc, consecutive embossed letters were 16 steps apart from each other. If we place them closer, yet with enough spacing for a visually-impaired user to be able to distinguish them with ease, the delay between the appearances of letters can be further decreased. The high speed of the electronics contributes to the minimum delay between the appearances of letters under the reading finger. The switching sequence of the stepper motor used had a minimum delay of 2ms. The motor speed is

150rpm.This is a limiting factor in the speed of rotation of the braille embossed disc. A motor with a higher speed will be able to present characters with even shorter delays. For presentation of braille characters in this method, we have used just one actuator as opposed to the use of many actuators (a minimum of six for a braille cell) as in other designs of braille readers. Even with the use of a single actuator in this method of presentation, the accuracy rates were between 98% and 100% for both users. Hence, we believe that further investigating this feature in reading braille with a larger sample size would help in the design of cost-effective braille readers.

5 Conclusion

We have shown in this preliminary study that it is possible for blind readers to read words even as non-sensical letters pass under their reading finger. The results noted in here are on testing with just two visually- challenged users, of which one was minimally proficient in English braille. A wider population of visually impaired people who are proficient in English must be tested. Also, this aspect of braille reading must be further investigated when the user has control over the presentation of characters. For this we plan to incorporate closed loop control of the motor where the user points to a character in an application and the disc rotates according to the position of the device as indicated by movement of a cursor that points to a letter on the screen. The disc needs to be redesigned to incorporate more characters.

Appendix

Testing of the device with visually challenged users complied with the guidelines of the Institutional Ethical Committee for Studies on Human Subjects, VIT University (Ref. No. VIT/IECH/007/April 16, 2016).

Acknowledgement

The authors would like to thank the Department of Science and Technology, Government of India for the financial support of this work (vide reference no.SR/WOS-A/ET/1000/2014 (G), under the Women Scientist Scheme). We are thankful to our volunteers, who so willingly gave their time for testing of the device. Thanks are due to Mr. Ravi Sivalingam for his assistance in the CAD drawings of the discs.

References

1. Thomas A, Rufus E. Alternate braille display designs: A review. Technology and Disability. 2016 Jan 1; 28 (4):123-32.

2. Vidal-Verdu F, Hafez M. Graphical tactile displays for visually-impaired people. IEEE Transactions on neural systems and rehabilitation engineering. 2007 Mar;15(1):119-30
3. Schiff W, Foulke E. Tactual perception: a sourcebook. Cambridge University Press; 1982 Mar 31.
4. Legge GE, Madison CM, Mansfield JS. Measuring Braille reading speed with the MNREAD test. Visual Impairment Research. 1999 Jan 1; 1 (3):131-45.
5. Loomis JM. On the tangibility of letters and braille. Attention, Perception, & Psychophysics. 1981 Jan 1; 29 (1):37-46.
6. Heller MA, Nesbitt KD, Scrofano DK, Daniel D. Tactual recognition of embossed Morse code, letters, and braille. Bulletin of the Psychonomic Society. 1990 Jul 1; 28(1):11-3.
7. Russomanno A, O'Modhrain S, Gillespie RB, Rodger MW. Refreshing Refreshable Braille Displays. IEEE transactions on haptics. 2015 Jul 1; 8 (3):287-97.
8. Lévesque V, Pasquero J, Hayward V, Legault M. Display of virtual braille dots by lateral skin deformation: feasibility study. ACM Transactions on Applied Perception (TAP). 2005 Apr 1; 2(2):132-49.
9. Lévesque V, Pasquero J, Hayward V. Braille display by lateral skin deformation with the STReSS2 tactile transducer. In Second Joint EuroHatics Conference and Symposium on Haptic Interfaces for Virtual Environment and Teleoperator Systems (WHC'07) 2007 Mar 22 (pp. 115-120). IEEE.
10. Roberts J, Slattery O, Kardos D. 49.2: Rotating-Wheel Braille Display for Continuous Refreshable Braille. In SID Symposium Digest of Technical Papers 2000 May 1 (Vol. 31, No. 1, pp. 1130-1133). Blackwell Publishing Ltd.
11. Nobels T, Desmet G, Van den Keybus J, Belmans R. Development of a portable braille display using a fast prototyping platform for power electronics. In IEEE conference publication 2006 (pp. 321-325). Institution of Electrical Engineers.
12. Yang GH, Kwon DS. KAT II: Tactile display mouse for providing tactile and thermal feedback. Advanced Robotics. 2008 Jan 1; 22 (8):851-65.
13. "Reading and writing machine using raised patterns." U.S. Patent 3,624,772, issued November 30, 1971
14. Jones LA. Designing Effective Refreshable Braille Displays. Computer. 2016 Jan;49(1):14-14
15. Runyan N, Blazie D. EAP actuators aid the quest for the 'Holy Braille' of tactile displays. In SPIE Smart Structures and Materials+ Nondestructive Evaluation and Health Monitoring 2010 Mar 25 (pp. 764207-764207). International Society for Optics and Photonics.