HAL
open science

Virtual Factory Framework for Supporting Production Planning and Control

Deogratias Kibira, Guodong Shao

To cite this version:

Deogratias Kibira, Guodong Shao. Virtual Factory Framework for Supporting Production Planning and Control. IFIP International Conference on Advances in Production Management Systems (APMS), Sep 2016, Iguassu Falls, Brazil. pp.291-298, 10.1007/978-3-319-51133-7_35 . hal-01615711

HAL Id: hal-01615711

https://inria.hal.science/hal-01615711

Submitted on 12 Oct 2017

HAL is a multi-disciplinary open access archive for the deposit and dissemination of scientific research documents, whether they are published or not. The documents may come from teaching and research institutions in France or abroad, or from public or private research centers.

L'archive ouverte pluridisciplinaire **HAL**, est destinée au dépôt et à la diffusion de documents scientifiques de niveau recherche, publiés ou non, émanant des établissements d'enseignement et de recherche français ou étrangers, des laboratoires publics ou privés.

Distributed under a Creative Commons Attribution 4.0 International License

Virtual Factory Framework for Supporting Production Planning and Control

Deogratias Kibira[1] and Guodong Shao[2]

[1] Morgan State University, Baltimore, U.S.A
deogratias.kibira@morgan.edu
[2] National Institute of Standards and Technology (NIST), Gaithersburg, U.S.A
gshao@nist.gov

Abstract. Developing optimal production plans for smart manufacturing systems is challenging because shop floor events change dynamically. A virtual factory incorporating engineering tools, simulation, and optimization generates and communicates performance data to guide wise decision making for different control levels. This paper describes such a platform specifically for production planning. We also discuss verification and validation of the constituent models. A case study of a machine shop is used to demonstrate data generation for production planning in a virtual factory.

Keywords: Virtual factory · Simulation· Production planning and control

1 Introduction

Conventional simulation tools are generally limited in their ability to capture and analyze multiple decision levels and system configurations [**?**]. A virtual factory, on the other hand, creates an integrated model that reproduces scenarios of information flow and capable of generating multi-level metrics to guide users in decision-making. These decisions can among others increase agility and productivity by reducing product realization time [**?**]. Virtual factories have been constructed to aid manufacturing system design, implementation, and modification [**?**].

Besides designing production systems and products, Choi et al. [**?**] sees the potential of a virtual factory to predict, solve, and manage problems during production. It is our view that the virtual factory's ability to integrate engineering tools and models such as simulations, design data, and optimizations could improve production planning activities. As such, this paper focuses on operations and performance monitoring, particularly production planning.

The rest of the paper is organized as follows. Section 2 reviews literature on technology, application of virtual factories, and verification and validation (V&V) concepts for the virtual factory. Section 3 describes the roles of a virtual factory for production planning as per control levels defined in the ISA-95 standard. Section 4 presents a demonstration case of a virtual factory. Section 5 presents final discussion and conclusion.

2 Related Work and Virtual Factory Validation

A virtual factory is composed of multi-level, multi-resolution models that are typically developed by different tools. This section overviews technologies employed for developing a virtual factory, various applications, and verification and validation issues.

- **Technology requirements for a virtual factory:** Virtual data management, automatic model generation, static and dynamic simulation, and integration and communication are paramount to realizing a virtual factory [**?**,**?**]. Most software tools are, in general, not supplied with these capabilities making developing a virtual factory challenging. The situation has, however, been recently improving with emergence of modeling, computation, communication, and integration technologies and standards [**?**]. Indeed, much related literature centers on technologies for enabling the virtual factory. A few of these technologies are overviewed next.
- **Overview of technologies and purpose of developing virtual factories:** To enhance conventional simulations for a virtual factory, Bal et al. [**?**] used the PROSA architecture for modeling controls while the Quest simulation tool models the physical elements. Hints et al. [**?**] developed a software tool named Design Synthesis Module to integrate models and enhance communication. Terkaj et al. [**?**] produced an ontology for a virtual factory to aid planning decisions. Ghani [**?**] developed an integrative tool to match low-level machine-component activities with targets set by aggregate planning.
- **Previous initial virtual factory models:** A virtual factory generates data at different levels of model resolution. Shao et al. [**?**] developed and validated a virtual model for generating energy usage data for machining operations. Furthering this research, Jain et al. [**?**] uses a two-tailed z-test to prove statistical concurrence of experimental results from a virtual factory at both the machine and manufacturing cell levels of detail.
- **Verification and validation of virtual factory models:** To ensure that a virtual factory is accurate for its intended purpose, V&V of constituent models and related data has to be carried out [**?**]. When developing and applying formal V&V methods, key features to distinguish about models are (1) deterministic or stochastic, (2) analytical or simulated, and (3) computationally efficient or computationally expensive.

When carrying out formal V&V, Uncertainty Quantification (UQ) needs to be considered for better correctness and appropriateness [**?**]. Uncertainties can be epistemic or aleatoric in nature. Epistemic uncertainties arise from ignorance of involved processes, such as invalid assumptions in modeling. Aleatory uncertainties arise from inherent variability in processes, such as physical properties of a system. Model fidelity and data availability typically vary greatly across different system levels of resolution. This issue complicates both the computation of metrics that describe process performance, and decision-making based

upon those metrics. V&V of a virtual factory as well as UQ can be achieved through intermediation environment, such as one created by Hibino et al. [**?**] to synchronize collected data and virtual factory computed data.

3 A Virtual Factory Approach to Multi-Level Production Planning

The virtual factory concept uses the ISA-95 standard (ANSI 2013) to specify decision levels that define functions supporting multi-level production planning. This standard was developed for all types of industries that represent different manufacturing processes, such batch, continuous, discrete, and repetitive processes. As such, the description of the virtual factory herein should likewise be universally applied.

- **Framework and role of models:** Figure 1 shows the functional hierarchical levels of ISA-95 as well as virtual factory roles at each level. At level 4, an aggregate plan is developed over a long-term planning horizon after investigating for stability using system dynamics [**?**]. Level 3 covers short to mid-term plans to determine actual start and finish times of individual product batches. Level 2 covers decisions on activities such as resource allocations. Level 1 is the manipulation of production process (level 0) to achieve required output. Data is collected in real-time at level 0 to update various models.
- **Multi-level performance analysis and improvements using the virtual factory:** The objectives of production planning include minimize late orders, minimize inventory, or maximize resource utilization. Such objectives are basis for defining Key Performance Indicators (KPIs) which, along with metrics and constituent measures, are communicated and monitored. Decisions are then made to maintain them within a target performance envelop. The relationship between data, metrics and KPIs at different levels can be numerical, analytical, or heuristic influence. With heuristic influence, a KPI is expressed in terms of supporting data, parameters, metrics or other KPIs. The direction of change (increase or decrease) in the dependent KPI is investigated through the relationship equation. The *Supply Chain Operations Reference* (SCOR) model (SCC 2012) adopts this approach by taking KPIs and performs a metrics decomposition, performance diagnosis, or metrics root-cause analysis. SCOR then constructs a metrics dependency tree of multiple measures that would generally be generated by different models within the virtual factory.

Metrics decomposition establishes a diagnostic relationship showing how metrics serve as diagnostics for dependent KPIs. For example, overall equipment effectiveness (OEE) index, as defined by ISO 22400-2 [**?**], depends on availability, effectiveness, and quality rate. OEE belongs to level 3 of ISA-95 while its constituent measures can be monitored at level 2. Availability is determined

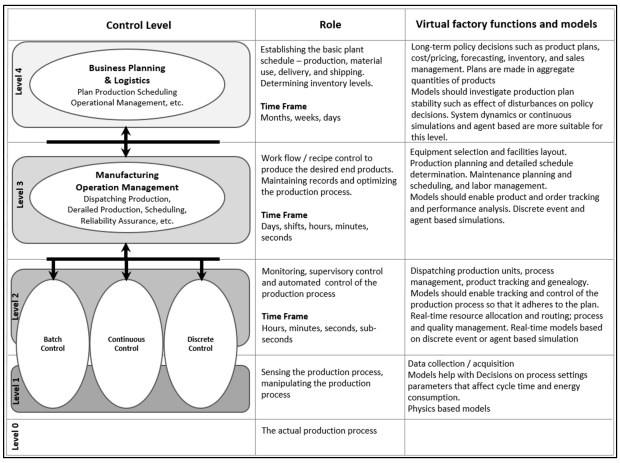

Fig. 1. Role of virtual factory models according to ISA-95 levels

by the equipment model incorporating failure and repair time study data obtained from samples of equally-spaced discrete observations during operation. The availability model can be constructed with high resolution using a programming language. Effectiveness performance model may be of low resolution constituted of run time per unit produced, number of units made, and actual production time. The quality rate is products that meet specifications compared with total units made.

Once a diagnostic relationship has been established, attention may be directed to a higher resolution of the production line model or resource responsible for a measure needing improvement while other parts of the virtual factory may remain at a lower resolution. The data, resources, and workflow through this model may then be further analyzed to balance any competing objectives that may occur. The analyst may also validate diagnosis and decision made through high visualizations of the virtual factory.

4 Case Study

The study is a case of monitoring KPIs at multi-resolution levels in metal machining using a virtual factory concept. The enterprise level determines an aggregate plan of same size batches to be produced per period (week) over a 12 period timeline. Lower level management then distributes batches for production to each of the two available machine cells that are shown in model Figure 2(b). Each machine cell has two processes: turning and milling. Machines undergo different states during production. As prototypical virtual factory is developed using AnyLogic simulation for three levels of decision control. Table 1 shows the functions and type of models employed at each level.

Table 1. Functions of multi-level models according to ISA-95 standard

ISA-Level	Physical system	Function	Virtual modeling method
4	Enterprise	Aggregate planning	System dynamics
3	Machine cell	Production scheduling	Discrete event simulation
2	Machine	Machine loading	Agent based modeling

- **Enterprise level model:** This model is shown in Figure 2 (a) and is built using System Dynamics (SD). The product batches for each period are input into the model to determine the production start rate at the routed shop. The production start rate is converted into inter-arrival times for the work cell model. In turn, the cycle time and work in progress levels are obtained from the machine cell model.
- **Machine cell model:** This is a model of the processing of a product on the shop floor. Discrete event simulation (DES) is employed, as shown in Figure 2(b). Entities enter the system from the source and routed to the first available machine for both turning and milling. The machines undergo periodic failure and repair cycles.
- **Machine level model:** This is a model of states of a machine during normal operation. Machine failure and repair cycle are indicated in the statechart shown in Figure 2 (c). When a machine is "Up", default substate is idling to which a machine reverts after repair or after ejection of the previous batch. Other machine states are "Down" or "Under repair" and, in these states, incoming parts cannot be routed to them. The machines undergo this cycle independently.
- **Model interactions:** When these models are integrated, the SD model receives input data from DES for update to aggregate planning. In turn, DES is updated with agent based simulations of machine processes. Figure 3 shows the exchanged data. Figure 4 shows that there is enough visual concurrency in monitored generated data: work in progress levels and production quantity between models at different resolution levels.

Such data can be used, for example, to monitor and maintain planned throughput rate. According to ISO 22400-2 [**?**], throughput rate = quantity produced or order execution time. Maximizing throughput in a job-shop production environment requires deploying the "shortest remaining processing time" priority rule [**?**]. If throughput rate is reduced, the causes are investigated using the constituent measures monitored at level 2 of ISA-95. These are analyzed with the discrete event simulation model. The cause could be an increase in order execution time which in turn depends on manufacturing cycle time. The causes of increase in cycle time can further be analyzed using work cell model.

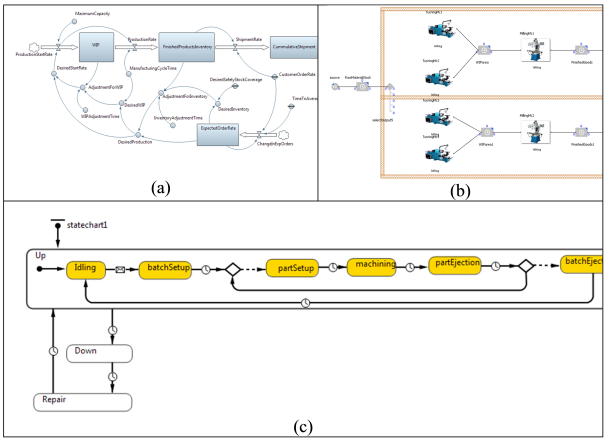

Fig. 2. Multi-resolution models of the virtual factory

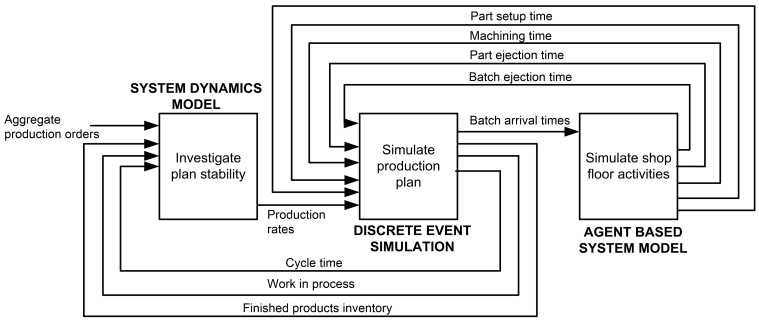

Fig. 3. Data generated and exchanhged between models

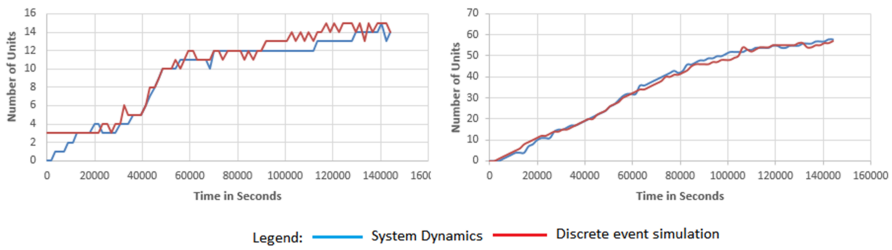

Fig. 4. Work in progress and cumulative production with time for system dynamics and discrete event simulations

5 Discussion and Conclusion

A virtual environment can be developed for generating and communicating production planning decisions from floor and optimize production, inventory, and cost objectives. Communicating performance of production plans and schedules in a virtual environment is beneficial to achievement of the smart manufacturing objectives. The industrial internet is one technology for connecting, collecting and communicating data. This framework is a first step in describing how the virtual factory can be used for developing and integrating models at different hierarchical levels. The example in this paper used a multi-method simulation software. To take advantage of strengths of different tools, a virtual factory would be developed using heterogeneous tools. Description of needed interfaces and review of existing standards will be the subject of future research work.

Acknowledgement:

This effort has been sponsored in part under the cooperative agreement No. 70NANB13H153 between NIST and Morgan State University. The work described was funded by the United States Government and is not subject to copyright. The contribution of David Lechevalier of NIST in the simulation work is acknowledged.

Disclaimer

No approval or endorsement of any commercial product by the National Institute of Standards and Technology is intended or implied. Certain commercial software systems are identified in this paper to facilitate understanding. Such identification does not imply that these software systems are necessarily the best available for the pur-pose.