HAL open science

Stimulating Effect of Low-Temperature Plasma (LTP) on the Germination Rate and Vigor of Alfalfa Seed (Medicago Sativa L.)

Xin Tang, Fengchen Liang, Lijing Zhao, Lili Zhang, Jing Shu, Huamei Zheng, Xu Qin, Changyong Shao, Jinkui Feng, Keshuang Du

To cite this version:

Xin Tang, Fengchen Liang, Lijing Zhao, Lili Zhang, Jing Shu, et al.. Stimulating Effect of Low-Temperature Plasma (LTP) on the Germination Rate and Vigor of Alfalfa Seed (Medicago Sativa L.). 9th International Conference on Computer and Computing Technologies in Agriculture (CCTA), Sep 2015, Beijing, China. pp.522-529, 10.1007/978-3-319-48354-2_53 . hal-01614183

HAL Id: hal-01614183

https://inria.hal.science/hal-01614183v1

Submitted on 10 Oct 2017

HAL is a multi-disciplinary open access archive for the deposit and dissemination of scientific research documents, whether they are published or not. The documents may come from teaching and research institutions in France or abroad, or from public or private research centers.

L'archive ouverte pluridisciplinaire **HAL**, est destinée au dépôt et à la diffusion de documents scientifiques de niveau recherche, publiés ou non, émanant des établissements d'enseignement et de recherche français ou étrangers, des laboratoires publics ou privés.

Distributed under a Creative Commons Attribution 4.0 International License

STIMULATING EFFECT OF LOW-TEMPERATURE PLASMA (LTP) ON THE GERMINATION RATE AND VIGOR OF ALFALFA SEED (*Medicago sativa* L.)

Xin Tang[1,a], Fengchen Liang[1,b], Lijing Zhao[2,c], Lili Zhang[2,d], Jing Shu[1], Huamei Zheng[1], Xu Qin[1], Changyong Shao[2,e*], Jinkui Feng[3], Keshuang Du[3]

[1]Shandong Agricultural Administrators College, Jinan 250100, PR China

[2]Shandong Province Seeds Group, Jinan 250100, PR China

[3] College of Engineering, China Agricultural University, Beijing 10083, PR China

a txsd@163.com,b liangfc01@sina.com,c zhaolijing008@163.com,

d zhagnll20020201@163.com,e shaochangyong68@163.com

*corresponding author

ABSTRACT. *Low-temperature plasma (LTP) treatment was applied to stimulate the seed of alfalfa (Medicago sativa L.) for better germination rates and vigor with the use of an inert gas, namely neon, at various discharge power levels. The seed passed through a neon-plasma glowing zone between two horizontally parallel electrode plates within the glow discharge chamber of a seed processing machine with an internal 2 ~ 8 mm atmospheric pressure. The seed were treated for 20 seconds. The LTP-treated seeds were germinated at 20° C in a germination chamber, and seedling emergence was evaluated at 24-hour intervals for up to 10 days. LTP stimulation significantly increased the germination rate and vigor versus an untreated sample. Among ten discharge power levels, the 20W treatment had the most significant effect on the rate and vigor. The use of 20W treatment increased the germination rate and vigor by 11% and 22% , respectively, relative to the control. LTP treated seeds that were stored for 20 days also had higher germination vigor than those stored for 4 days. These results suggest that the use of the LTP technique with a seed processing machine is effective and practical for the purpose of stimulating crop seeds for improved germination.*

Keywords. *LTP treatment, stimulating effects, alfalfa seeds, germination rate, germination vigor*

INTRODUCTION

Low-temperature plasma (LTP) as a physical method has been used experimentally in agriculture since the 1970s (Hao and Qin, 1998). The technique was first applied in seed treatments to improve germination rate and vigor in Russia and the Commonwealth of Independent States (CIS), and has been delved further into seed processing in China, Canada and United States. In recent years, some small scale seed enterprises with specialized LTP systems are starting to take shape as new uses of LTPs are developed (Li, 2010; Yin, 2006). Although observations of the interaction of plasma with seed or living tissue have been primarily empirical, it has been reported that the LTP treatment could not only stimulate seed germination and make crops mature earlier, but also increase flower number and yield (Zhang et al., 2005; Shi et al., 2010). Based on current studies from around the world, LTP stimulates crop seeds by ionizing radiation, mass deposition and charge exchange of ion implantation to biomolecules during the glow discharge process (Dhayal, et. al., 2006; Volin et al., 2000; Grzegorzewski, 2011; Grzegorzewski et al., 2009; RDEOFESWLTP, 2008). As a result of the LTP treatment, seed coat is softened, and organic compounds and bio-reactions in embryos are activated, hastening germination and seedling emergence, and increasing crop earliness, yield and resistance to drought and certain diseases (Xu et al., 2011; Liu et al., 2007; Shao et al., 2012; Hu et al., 2007; Yin et al., 2005; Filatova et al., 2010). Various techniques of seed stimulation such as microwave heat radiation, salt stress, water stress, electric-field induction, lanthanum ion radiation, ultraviolet ray irradiation and drought shocks are currently used to treat crop seed, but there has been relatively little research on the application of LTP machines for seed processing, especially alfalfa seed treatment (Fu et al., 2006;; Luo et al., 2012; Li et al., 2006; Huo et al., 2011; Qin, 2004; Zheng et al., 2002). Our goal in this study was to evaluate the effect of LTP treatment on alfalfa seed germination rate and vigor by subjecting the seed to a simulated outer-space environment within the evacuated and neon-filled glow discharge chamber of a LTP seed processing machine.

MATERIALS AND METHODS

Equipment and Seed Material. An LTP seed processing machine HL-2N (Fig 1), provided by ChangZhou ZhongKe ChangTai Plasma Technology Co., was used to perform the treatment of alfalfa seed. The primary part of the machine was the glow discharge chamber which consisted of a pair of electrodes with horizontal plates parallel to each other, and a conveyer belt system (Fig1-1). The conveyer belt was positioned between the two planar electrodes and capable of horizontal movement driven by a wheel. The electrodes were connected to a high-tension AC power supply to generate a glow discharge for gas plasma. It was capable of treating a large capacity of seed materials in a continuous or batched process.

The seed material used in this study was a material of purple-flowered alfalfa (*Medicago sativa* L.) with main-season

maturity, which was Zhongmu No. 6, bred by the Institute of Animal Sciences (IAS), Chinese Academy of Agricultural Sciences (CAAS). Only plump and viable seeds with a uniform size (2.3 g./1000) were selected for the test.

LTP Seed Stimulation. After the selected alfalfa seeds were loaded in the receiving hopper Chamber I (Fig.1-6), the machine was evacuated by the vacuum air pumps (I, II, III and IV) and filled with neon (an inert gas) as plasma gas. Neon conducts electricity 75 times more efficiently than air and has stronger penetrating force. To obtain uniform and stable glow discharge between the two electrode plates, an internal 2 ~ 8 mm atmospheric pressure within the machine was maintained. Opening the butterfly valve initiated the glow discharge between the two electrodes, which in turn generated the gas plasma of neon which consisted of many plasma-created species, such as: electrons, ions, photons, and neutrals, with a variety of energies and momenta, chemical activities, and transport characteristics. After the seeds went through the first two receiving hopper chambers and landed on the conveyer belt in the glow discharge chamber, they

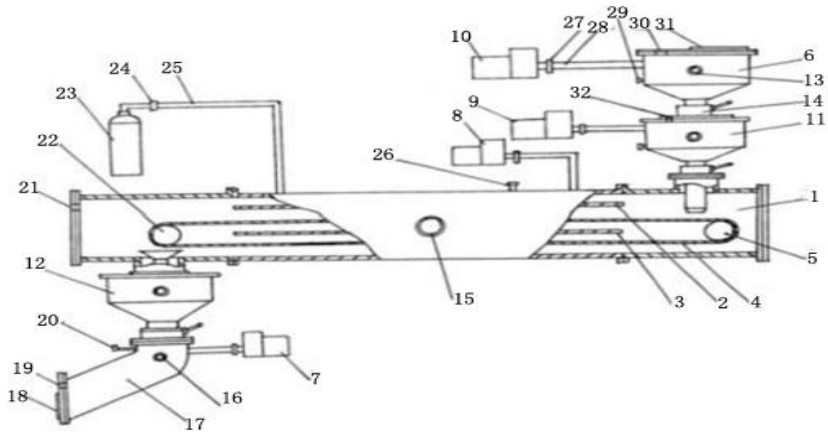

Figure1. Experimental configuration for low-temperature plasma treatment

1. Glow discharge chamber; 2. Top electrode plate; 3. Bottom electrode plate; 4. Conveyer belt; 5. Driven wheel; 6. Receiving hopper Chamber I; 7. Vacuum air pump I; 8. Vacuum air pump II; 9. Vacuum air pump III; 10. Vacuum air pump IV; 11. Receiving hopper Chamber II; 12 Seed-discharging hopper chamber; 13. Detector tube I; 14. Butterfly gate; 15. Detector tube II; 16. Detector tube III; 17. Discharging Pipeline;18. Discharging gate; 19. Thermocouple gauge tube I; 20.Exhaust valve I; 21. Thermocouple gauge tube II; 22. Driving wheel; 23. Gas tank; 24. Gas valve; 25. Intake pipe; 26. Exhaust valve II; 27. Electromagnetic relief valve; 28, Vacuum tube; 29, Exhaust valve III; 30, Thermocouple gauge tube III; 31, Hopper cap; 32, Thermocouple gauge tube IV.

passed through the plasma glowing zone and were affected/energized by the synergistic effects of the multiple plasma-created species driven by externally-applied electric fields. Ten electric wattages (20W, 40W, 60W, 80W, 100W, 120W, 140W, 160W, 180W, 200W) as discharge power were used as the stimulating levels of LTP treatment, and an untreated (0W) sample of seeds was kept as the control for later seed germination. The seeds were treated with the LTP in the chamber for 20 seconds before they were moved to the seed-discharging hopper chamber (Fig. 1-12).

*Germination Tests.*After the LTP stimulation, the treated seeds were divided into two parts and arranged in a nested design for the germination tests, in which the first half of the seeds was stored on shelf for four days as the first time-nest(T1) and the second half for twenty days as the second time-nest (T2). Each nest consisted of ten LTP-treated seed samples and the control. Before the germination test, the stimulated seeds were pre-chilled to break up their dormancy. The germination test was conducted at 20°C in a dark germination chamber. 100 seeds from each of the 10 treated levels and the control were laid in 12-cm Petri dishes lined with filter paper. The Petri dishes were irrigated with 4 ml of distilled water and constantly maintained sufficient moisture for the seeds to germinate. Germinated seeds or seedlings were counted at 24-hour intervals for up to 10 days. Since germination rate and vigor are both important indications of seed quality, viability and the potential of emergence, they were adopted to determine the effects of the LTP treatment on the stimulation of alfalfa seed in this study. Germination rate (GR) is the percentage of seeds that germinate in a specified time (10 days after sowing for alfalfa seed according to GB/T 3543.4-1995, Rules for Agricultural Seed Testing-germination Test) and germination vigor (GV) is the percentage of seeds that germinate within a short time (4 days after sowing for alfalfa seed in accordance with GB/T 3543.4-1995), which are defined as:

GR (%) = (Number of seeds germinated in 10 days/total number of seeds) × 100%

GV (%) = (Number of seeds germinated in 4 days/total number of seeds) × 100%.

Because GR and GV are proportional data which rarely produce normal distributed residuals and stable variances, the two values were transformed by logit transformation during data analysis and mean separation.

RESULTS AND DISCUSSION

Effects of Discharge Power levels and Storage Time of LTP Pre-treated Seeds on Germination Vigor. Two discharge power levels (20W and 100W) had the most significant effect, at $P = 0.005$, on the germination vigor of alfalfa seed (Table 1). Six discharge power levels (40W, 60W, 80W, 120W, 160W and 200W) resulted in a significantly higher range of germination vigor than the control (0W), but no differences among their respective influence. The effect of 180W was low and the seed stimulation of 140W was not significantly different from the control.

When considering the effect of storage time on LTP pre-treated seeds, it was found that the germination vigor of the LTP pre-treated alfalfa seeds which were stored for 20 days was significantly higher than that of seeds stored for 4 days (Table 1). This suggests that LTP pre-treated seeds should be stored longer in order to improve germination vigor before planting. It can be deduced that the synergistic effects of chemical activities, energy momenta, mass deposition and ion implantation of the plasma-created species (electrons, ions, photons and neutrals) on biomolecules are complex and need a relatively long period of time to be revealed through modifying and energizing a series of biochemical reactions in the

seeds. More research is necessary to determine whether there were interactions between discharge power levels and storage time of the LTP pre-treated seed influence seed vigor.

Table 1. Effects of discharge power levels and the storage time of LTP treated seeds on the germination vigor of alfalfa seed.

Power Levels	GV Values [W] T1	T2	Mean[Z]
0W	43	51	47.00 c
20W	57	58	57.50 a
40W	53	54	53.50 abc
60W	47	57	52.00 abc
80W	50	56	53.00 abc
100W	54	57	55.50 ab
120W	52	54	53.00 abc
140W	45	50	47.50 c
160W	50	53	51.50 abc
180W	47	52	49.50 bc
200W	50	53	51.50 abc
Mean	49.82 b	54.09 a	

[Z]Tested by logit-transformed GV data. Mean separation within columns and rows(a, b, c) by least significant different (P = 0.05). The means bearing the same letters were not significantly different at the 5% level.

[W]Germination rate values for T1 (LTP treated seeds were stored for 4 days) and T2 (LTP treated seeds were stored for 20 days).

Effects of Discharge Power levels and the Storage Time of LTP Pre-treated Seeds on Germination Rate. Of the ten treatments, the 20W, 80W, 180W and 200W had the highest stimulating effect ($P=0.05$) on the germination rate of alfalfa seed in comparison to the others (Table 2). However, none of these four treatments resulted in a significantly different rate from one another. The levels of 40W, 100W, 120W and 160W brought about an intermediate influence on the rate, but

were significantly better than the two treatments 60W and 140W, which showed no differences from the control.

As the seed germination rates were observed in the 4-day-storing lot and 20-day-storing lot, the two mean rates were 59.46% and 58.36% (Table 2). The results showed that the effects of all the LTP treatments on the mean rates of the two time lots were nonsignificant. The lack of influence of seed storage time levels after the LTP stimulation indicates that certain germination rates can be eventually achieved no matter how long the LTP-treated seeds are stored, so long as adequate time and appropriate conditions are met for germination. In other words, the effect of LTP seed stimulation on germination rate is not correlated with the storage time of pre-treated seeds, although it could make significant differences in germination vigor.

Table 2. Effects of discharge power levels and the storage time of LTP treated seeds on the germination rate of alfalfa seed.

Power Levels	GR Values [W]		Mean[Z]
	T1	T2	
0W	55	56	55.5 b
20W	63	60	61.50 a
40W	61	57	59.00 ab
60W	55	56	55.50 b
80W	59	62	60.50 a
100W	62	56	59.00 ab
120W	61	58	59.50 ab
140W	57	55	56.00 b
160W	59	60	59.50 ab
180W	61	61	61.00 a
200W	61	61	61.00 a
Mean	59.46 a	58.36 a	

[Z]Tested by logit-transformed GR data. Mean separation within columns and rows(a, b) by least significant different (P = 0.05). The means bearing the same letters were not significantly different at the 5% level.

[W]Germination rate values for T1 (LTP treated seeds were stored for 4 days) and T2 (LTP treated seeds were stored for 20 days).

Germination Rate and Vigor Relative to the Control. In comparing the effects of all ten levels (20W, 40W, 60W, 80W, 100W, 120W, 140W, 160W, 18W and 200W) of discharge power to the control (0W), a trend of fluctuating effects is

displayed in Figure 2 that the LTP treatments resulted in higher (at 20W), intermediate (between 80W and 100W), and lower (between 160W and 200W) increments of germination rates and vigor as the discharge power levels increased. Two obvious peaks (11%, 22%) of the increments of germination rates and vigor both occurred at the 20W and 100W levels. The chart also demonstrated that the LTP treatment had higher effects on the germination vigor than rates in the low range of discharge power, but no obvious differences in the high range.

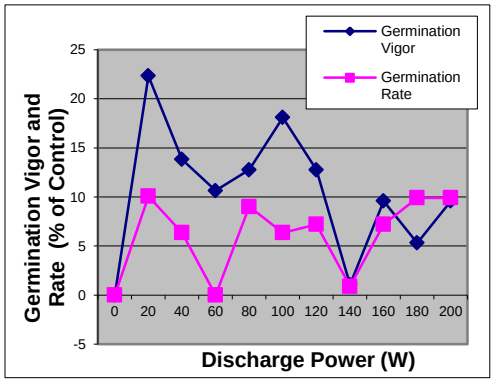

Figure 2. Effect of discharge power (W) on the seed germination rates and vigor of alfalfa, expressed as percent of the control (0W).

CONCLUSION

The application of new agricultural technologies has resulted in impressive gains in crop productivity. LTP is a technique that will likely play an important role in future gains in the improvement of crop seed production and quality, especially in stimulating germination and seedling emergence, and possible also in increasing crop earliness, yields and resistance to drought and certain diseases. Unlike non-LTP seed stimulating methods discussed in the introduction, the LTP seed treatment for germination stimulation in this experiment could not only be conducted mechanically, but also very effectively. Our study provides that LTP seed treatment significantly increased the germination rates and vigor of alfalfa seed in comparison to an untreated control. More importantly, this experiment has established a powerful model for seed businesses and farmers to stimulate crop seeds for better germination rates, vigor and higher yields.

References

1. Marshal Dhayala, Sook-Young Leea, Sang-Un Parkb. Using low-pressure plasma for *Carthamus tinctorium* L. seed surface modification [J]. Vacuum, 2006.80(5): 499-506.

2. Irina Filatova,Viktor Azharonok,Mikhail Kadyrov.Rf and Microvawe Plasma Application for Pre-Sowing Caryopsis Treatments.

3. Fu Sanling, Zhang Fu,Li jianchang,et al. Several physical techniques in agriculture and Prospects[J]. Agricultural Mechanization Research, 2006, (1）:36- 38. (in Chinese)

4.Grzegorzewski, F. 2010. Influence of non-thermal plasma species on the structure and functionality of isolated and plant-based1,4-benzopyrone derivatives and phenolic acids. Available at:www.0pus4.kobv.de/opus4-tuberlin/files/2839/grzegorzewski_franziska.pdf. Accessed 30 November 2013.

5.Grzegorzewski, F.; Schluter, O.; Ehlbeck, J.; Kroh, L. W., and S., Rohn. 2009. Influence of non thermal plasma-immanent reactive species on the stability and chemical behavior of bioactive compounds (Talk). Euro Food Chem. Xv - Food for Future. Copenhagen, Denmark. 5-8.

6. Hao XJ, Qin JG. et al, Preliminary Study of low temperature plasma seed treatment [J]. Shanxi Agricultural Sciences, 1998,26 (2): 39-41.

7. Hu Lianglong, Tian Lijia, Hu zhichao,et al. Application of physical agriculture techniques in cleaned seeds treatments[J]. Journal of Anhui agricultural science, 2007, (3)13:3778- 3779. (in Chinese)

8.Huo PH, J F Li, and SL Shi. Germination and growth of ultra-dried alfalfa seeds under salt stress[J]. Grassland and Turf, 2011（01）:13-17. (in Chinese).

9. Li B, D Z Jiao, and CY Zhan. Effect of microwave treatment on the germination and seedling drought resistance of Alfalfa[J]. Seed. 2006 (12):28-30. (in Chinese).

10. Li Ruifu. Plasma machine seed treatment technology[J]. North Rice , 2010, (4)4:52 - 53 . (in Chinese)

11. Liu Shan, Ouyang, Xirong,Nie rongbang. Application status and development trend of the physical methods in the crop seed treatment[J]. Crop research, 2007,(2）5: 520 - 524 . (in Chinese)

12. Luo Haiyun, Ran Junxia, Wang Xinxin, et al. Comparision Study of Dielectric Barrier Discharge in Inert Gases at Atmospheric Pressure[J] . High Voltage Engineering,2012,(38)5:1070-1077 .

13.Qin F. Effect of microwave treatment on drought resistance of four local alfalfa cultivars of Gansu Province [J] .Pratacultural Sci. 2004 (11) : 41-43. (in Chinese).

14.RDEOFESWLTP. 2008. Low Temperature Plasma Science: Not only the fourth state of matter but all of them. Report of the Department of Energy Office of Fusion Energy Sciences Workshop on Low Temperature Plasmas. Available at: www.scence.energy.gov/fes/about/~/media/fes/pdf/about/low_temp_plasma. Accessed 10 November 2013.

15. Shao Changyong, Wang Decheng,Tang xin, et al. Arc plasma system and its application & development treads on pre-sowing seeds treatment[J]. China seed industry, 2012, (8):1-3. (in Chinese)

16.Shi Y H, XQ Fang, and DH Xu. Effect of plasma seed treatment with different radiation intensity on the biological traits, yields and output values of soybean [J]. Jilin Agric. Sci. 2010（35）6-7. (in Chinese)

17.Volin J C, Denes F S, Yong RA, S M Park. Modification of seed germination performance through cold plasma technology [J]. Crop Sci. 2000(40) 1076.

18. Xu Zhiying, Chen Bo,Wei zhen. Various seed treatments on corn yield[J]. Agricultural science & technology and Equipment, 2011,

(4)：15 - 16. (in Chinese)

19. Yin, Meiqiang. Research of magnetized arc plasma on seeds biological effects [D]. Dalian: Dalian University of Technology, 2006. (in Chinese)

20. Yin Meiqiang，HuangMingjing．Stimulatnig Effects of Seed Treament by Magnetized Plasma on Tomato Growth and Yield．Plasma Science & Technology，2005，(7)6：3143-3147.

21. Zhang Yuhang, Zhang Jinglou,Wang qingfa. The application of physical methods in sugar beet seed treatment[J]. China Beet and Sugar, 2005, (2): 20 - 22 . (in Chinese)

22. Zheng RY, Y Xu, TQ Yang. Influence of treating Lucerne seed with electric field on the seedling growth[J]. Scientiarum Naturalium Universitatis Neimongol. 2002 (03):359-362. (in Chinese).