HAL open science

Mathematical foundations of computational electromagnetism

Franck Assous, Patrick Ciarlet, Simon Labrunie

To cite this version:

Franck Assous, Patrick Ciarlet, Simon Labrunie. Mathematical foundations of computational electromagnetism. Springer, 2018, Mathematical Foundations of Computational Electromagnetism, 978-3-319-70841-6. 10.1007/978-3-319-70842-3 . hal-01596575v2

HAL Id: hal-01596575

https://hal.science/hal-01596575v2

Submitted on 23 Feb 2018

HAL is a multi-disciplinary open access archive for the deposit and dissemination of scientific research documents, whether they are published or not. The documents may come from teaching and research institutions in France or abroad, or from public or private research centers.

L'archive ouverte pluridisciplinaire **HAL**, est destinée au dépôt et à la diffusion de documents scientifiques de niveau recherche, publiés ou non, émanant des établissements d'enseignement et de recherche français ou étrangers, des laboratoires publics ou privés.

Mathematical foundations of computational electromagnetism

Franck Assous
Dept of Mathematics
Ariel University
44700 Ariel
Israël

Patrick Ciarlet
ENSTA ParisTech
828, boulevard des Maréchaux
91762 Palaiseau Cedex
France

Simon Labrunie
Institut Élie Cartan
Université de Lorraine
54506 Vandœuvre-lès-Nancy Cedex
France

version finale (February 22, 2018)

©Franck Assous, Patrick Ciarlet & Simon Labrunie 2017

Foreword

Our interest in the study and computation of electromagnetic fields started during the 1990s. For Franck Assous, it originated from the need to compute precisely the motion of charged particles for plasma physics applications. For Patrick Ciarlet, it began with the study of the relations between the electromagnetic fields and their potentials from a mathematical point of view. From both the numerical and the theoretical points of view, it soon appeared that one had to be especially careful when dealing with singular configurations. A typical example occurs when one has to solve a seemingly elementary problem, namely the computation of the fields in vacuum, around a perfectly conducting body, or inside a perfectly conducting cavity or waveguide. Together with Simon Labrunie, we started to investigate this problem for a class of such bodies that are invariant by rotation. Since then, we have collaborated regularly on this topic and many others.

Going back to the example, when the interface between the body and vacuum is piecewise smooth and when the computational domain is locally nonconvex near this interface, intense electromagnetic fields may occur. Pointwise values are unbounded, and mathematically, the smoothness of the fields deteriorates. It turns out that this common situation induces challenging problems, which we address here. Though the contents of this monograph chiefly deal with theoretical issues, most results are derived in order to solve problems numerically, using discretized variational formulations (we do not address the issue of discretization in this book).

The focus of this monograph is clearly an applied mathematical one; however, we begin by discussing the physical framework of electromagnetism and related models. One of the main points of the book is the introduction of mathematical tools to characterize electromagnetic fields precisely and, among others, the traces of those fields on submanifolds of $\mathbb{R}^3$. This issue is especially important on nonsmooth submanifolds. Another important issue is the mathematical measure of those fields, which can take several forms. Interestingly, this leads to very different categories of discretized problems. A third main

issue is the introduction and justification of approximate models in a broad sense, such as, for instance static, quasi-static or time-harmonic, and also of reduced models, namely 2D and $2\frac{1}{2}$D models. The last important issue deals with the introduction and study of models that govern the motion of charged particles interacting with electromagnetic fields.

The text is entirely self-contained: we only assume from the reader a bachelor-level background in analysis, and we give all the necessary basic definitions. Nevertheless, this monograph includes some original approaches and novel applications not covered, to our knowledge, in previous books. It is chiefly intended for researchers in applied mathematics who work on Maxwell's equations and their approximate or coupled models. Much of its material may also serve as a basis for master or doctorate-level courses on mathematical electromagnetism.

We are indebted to a number of people who contributed, to various extents, to the topics we address in this monograph. Let all of them be thanked: Régine Barthelmé, Anne-Sophie Bonnet-BenDhia, Annalisa Buffa, Lucas Chesnel, Pierre Degond, Emmanuelle Garcia, Erell Jamelot, Pierre-Arnaud Raviart, Jacques Segré, Eric Sonnendrücker, Jun Zou and Carlo Maria Zwölf.

Finally, we gratefully acknowledge the help of the following readers of preliminary versions of the manuscript: Lucas Chesnel, Lipeng Dai, Benjamin Goursaud, and Claire Scheid.

Franck Assous, Patrick Ciarlet and Simon Labrunie

Contents

Foreword . . . iii

1 Physical framework and models . . . 1
1.1 Electromagnetic fields and Maxwell's equations . . . 2
1.1.1 Integral Maxwell equations . . . 3
1.1.2 Equivalent reformulation of Maxwell's equations . . . 4
1.1.3 Constitutive relations . . . 5
1.1.4 Solvability of Maxwell's equations . . . 8
1.1.5 Potential formulation of Maxwell's equations . . . 11
1.1.6 Conducting and insulating media . . . 13
1.2 Stationary equations . . . 14
1.2.1 Time-harmonic Maxwell equations . . . 15
1.2.2 Electromagnetic plane waves . . . 18
1.2.3 Electromagnetic plane waves inside a conductor . . . 20
1.2.4 Dispersive media . . . 22
1.3 Coupling with other models . . . 23
1.3.1 Vlasov–Maxwell model . . . 25
1.3.2 Magnetohydrodynamics . . . 29
1.4 Approximate models . . . 34
1.4.1 The static models . . . 35
1.4.2 A scaling of Maxwell's equations . . . 36
1.4.3 Quasi-static models . . . 38
1.4.4 Darwin model . . . 39
1.4.5 Coupled approximate models . . . 40
1.5 Elements of mathematical classifications . . . 41
1.5.1 Standard differential operators . . . 41
1.5.2 Partial differential equations . . . 42
1.5.3 Maxwell's equations classified . . . 44
1.5.4 Resonance vs. time-harmonic phenomena . . . 46
1.6 Boundary conditions and radiation conditions . . . 49
1.6.1 Boundary conditions . . . 49

1.6.2 Radiation conditions . . . 57
1.7 Energy matters . . . 61
1.8 Bibliographical notes . . . 66

2 Basic applied functional analysis . . . 69
2.1 Function spaces for scalar fields . . . 69
2.2 Vector fields: standard function spaces . . . 86
2.2.1 Elementary results . . . 86
2.2.2 Traces of vector fields . . . 91
2.3 Practical function spaces in the $(t, \boldsymbol{x})$ variable . . . 96

3 Complements of applied functional analysis . . . 101
3.1 Vector fields: tangential trace revisited . . . 101
3.2 Scalar and vector potentials: the analyst's and topologist's points of view . . . 110
3.3 Extraction of scalar potentials and consequences . . . 113
3.4 Extraction of vector potentials . . . 121
3.5 Extraction of vector potentials – Vanishing normal trace . . . 125
3.6 Extraction of vector potentials – Complements . . . 130
3.7 Helmholtz decompositions . . . 135

4 Abstract mathematical framework . . . 137
4.1 Basic Results . . . 137
4.2 Static problems . . . 144
4.3 Time-dependent problems . . . 151
4.3.1 Problems without constraints . . . 152
4.3.2 Problems with constraints . . . 158
4.4 Time-dependent problems: improved regularity results . . . 163
4.4.1 Problems without constraints . . . 163
4.4.2 Problems with constraints . . . 167
4.5 Time-harmonic problems . . . 170
4.5.1 Helmholtz-like problem . . . 170
4.5.2 Eigenproblem . . . 174
4.6 Summing up . . . 177

5 Analyses of exact problems: first-order models . . . 179
5.1 Energy matters: uniqueness of the fields . . . 179
5.1.1 Preliminaries . . . 179
5.1.2 Energy conservation and uniqueness . . . 182
5.1.3 Comments . . . 194
5.2 Well-posedness . . . 194
5.2.1 In a homogeneous medium . . . 195
5.2.2 In a perfect medium . . . 197
5.2.3 In a dispersive medium . . . 199
5.2.4 Truncated exterior problem . . . 201

5.2.5 Truncated interior problem 206
5.2.6 Notes on truncation 207
5.2.7 Comments 207

6 Analyses of approximate models 209
6.1 Electrostatic problem 210
6.1.1 Definitions and results for the electrostatic problem 210
6.1.2 Solving the electrostatic problem: mixed formulation . . . 214
6.1.3 Solving the electrostatic problem: augmented formulation 216
6.1.4 Solving the electrostatic problem: two-step formulation . 217
6.1.5 Electric energy matters 218
6.1.6 Regular-gradient splitting of electric fields 219
6.2 Magnetostatic problem 223
6.2.1 Definitions and results for the magnetostatic problem . . 223
6.2.2 Solving the magnetostatic problem: mixed formulation . 227
6.2.3 Solving the magnetostatic problem: augmented formulation 228
6.2.4 Solving the magnetostatic problem: two-step formulation 229
6.2.5 Magnetic energy matters 231
6.2.6 Regular-gradient splitting of magnetic fields 232
6.3 Further comments around static problems 235
6.3.1 Electrostatic problem 235
6.3.2 Magnetostatic problem 236
6.3.3 Other sets of boundary conditions 237
6.3.4 Application to time-dependent problems 237
6.4 Other approximate models 238
6.4.1 Quasi-static models 238
6.4.2 Darwin model 241
6.4.3 Notes on asymptotic analysis 243
6.4.4 Other boundary conditions – Exterior problem 247

7 Analyses of exact problems: second-order models 249
7.1 First-order to second-order equations 249
7.1.1 Semi-classical approach 250
7.1.2 Variational approach 251
7.2 Well-posedness of the second-order Maxwell equations 254
7.2.1 In a domain encased in a perfect conductor 256
7.2.2 Truncated interior problem 262
7.3 Second-order to first-order equations 267
7.3.1 Two-field approach 268
7.3.2 One-field approach 270
7.4 Other variational formulations 272
7.4.1 Augmented formulations 273
7.4.2 Mixed formulations 276

7.5 Compact imbeddings . . . 282
7.6 Improved regularity for augmented and mixed augmented formulations . . . 285

8 Analyses of time-harmonic problems . . . 291
8.1 Compact imbeddings: complements . . . 291
8.2 Free vibrations in a domain encased in a cavity . . . 294
8.2.1 Electric eigenproblem . . . 295
8.2.2 Magnetic eigenproblem . . . 297
8.2.3 Solving the first-order eigenproblem . . . 298
8.3 Sustained vibrations . . . 299
8.3.1 In a domain encased in a perfect conductor . . . 299
8.3.2 Inside a conductor . . . 305
8.3.3 Diffraction problem . . . 307
8.4 Interface problem between a dielectric and a Lorentz material . 313
8.5 Comments . . . 319
8.5.1 Compact imbeddings . . . 319
8.5.2 Limiting amplitude principle . . . 319
8.5.3 Diffraction problem . . . 319
8.5.4 Interface problem with sign-changing coefficients . . . 320
8.5.5 Resonances . . . 321

9 Dimensionally reduced models: derivation and analyses . . . 323
9.1 Two-and-a-half dimensional ($2\frac{1}{2}$D) models . . . 323
9.1.1 Axisymmetric domains . . . 325
9.1.2 Prismatic domains . . . 327
9.2 Two-dimensional (2D) models . . . 329
9.2.1 Geometric and group-theoretical definitions . . . 329
9.2.2 Symmetric problems with symmetric data . . . 334
9.2.3 Differential operators (continued) . . . 339
9.2.4 The Maxwell's equations . . . 340
9.3 Some results of functional analysis . . . 345
9.3.1 Prismatic setting (plane model) . . . 345
9.3.2 Axisymmetric setting (fully axisymmetric model) . . . 349
9.4 Existence and uniqueness results (2D problems) . . . 354
9.4.1 Static problems . . . 355
9.4.2 Time-dependent problems (standard regularity) . . . 356
9.4.3 Time-dependent problems (improved regularity) . . . 362

10 Analyses of coupled models . . . 365
10.1 The Vlasov–Maxwell and Vlasov–Poisson systems . . . 365
10.1.1 The models . . . 365
10.1.2 Linear Vlasov equation . . . 368
10.1.3 Weak and renormalised solutions for Vlasov–Poisson and Vlasov–Maxwell . . . 375

10.1.4 Strong solutions for Vlasov–Poisson and Vlasov–Maxwell 382
10.2 Magnetohydrodynamics . . . 387
10.2.1 The model . . . 387
10.2.2 Variational formulation and energy equality . . . 389
10.2.3 The linear stationary equations . . . 391
10.2.4 Weak and strong solutions to the evolution problem . . . 393

References . . . 399

A Index of function spaces . . . 411
A.1 Basic spaces . . . 411
A.1.1 Differentiable functions and distributions . . . 411
A.1.2 Lebesgue and Sobolev spaces . . . 411
A.1.3 Functional spaces on the boundary (trace spaces) and related spaces . . . 412
A.1.4 Spaces of vector fields . . . 413
A.2 Electromagnetic spaces . . . 413
A.2.1 Basic spaces of electromagnetic fields . . . 413
A.2.2 Tangential trace spaces . . . 415
A.2.3 "Natural spaces" and their subspaces . . . 416
A.2.4 Potentials and related spaces . . . 417
A.2.5 Spaces of improved regularity . . . 418
A.3 Dimension reduction and weighted spaces . . . 418
A.3.1 Axisymmetric and translationally symmetric spaces . . . 418
A.3.2 Basic weighted spaces in the meridian section . . . 419
A.3.3 Meridian electromagnetic spaces . . . 419
A.3.4 Transversal spaces . . . 420
A.4 Spaces measuring time regularity . . . 420

List of Figures . . . 422

Index . . . 423

1

Physical framework and models

The aim of this first chapter is to present the physics framework of electromagnetism, in relation to the main sets of equations, that is, Maxwell's equations and some related approximations. In that sense, it is neither a purely physical nor a purely mathematical point of view. The term *model* might be more appropriate: sometimes, it will be necessary to refer to specific applications in order to clarify our purpose, presented in a selective and biased way, as it leans on the authors' personal view. This being stated, this chapter remains a fairly general introduction, including the foremost models in electromagnetics. Although the choice of such applications is guided by our own experience, the presentation follows a natural structure.

Consequently, in the first section, we introduce the electromagnetic fields and the set of equations that governs them, namely Maxwell's equations. Among others, we present their integral and differential forms. Next, we define a class of constitutive relations, which provide additional relations between electromagnetic fields and are needed to close Maxwell's equations. Then, we briefly review the solvability of Maxwell's equations, that is, the existence of electromagnetic fields, in the presence of source terms. We then investigate how they can be reformulated as potential problems. Finally, we relate some notions on conducting media.

In Section 1.2, we address the special case of stationary equations, which have time-periodic solutions, the so-called time-harmonic fields. The useful notion of plane waves is also introduced, as a particular case of the time-harmonic solutions.

Maxwell's equations are related to electrically charged particles. Hence, there exists a strong correlation between Maxwell's equations and models that describe the motion of particles. This correlation is at the core of most models in which Maxwell's equations are coupled with other sets of equations: two of them – the Vlasov–Maxwell model and an example of a magnetohydrody-

namics model (or MHD) – will be detailed in Section 1.3.

We introduce in the next section approximate models of Maxwell's equations, ranging from the static to the time-dependent ones, in which one or all time derivatives are neglected. We also consider a general way of deriving such approximate models.

In Section 1.5, we recall the classification of partial differential equations, and check that Maxwell's equations are hyperbolic partial differential equations.

At an interface between two media, the electromagnetic fields fulfill some conditions. In a similar way, when one of the media is considered as being exterior to the domain of interest,[1] interface conditions are then formulated as boundary conditions on the boundary of the domain. Also, to reduce the overall computation cost, one usually truncates the domain by introducing an artificial boundary, on which (absorbing) boundary conditions are prescribed. Another possibility is to introduce a thin, dissipative layer, in which the fields are damped. This constitutes the first topic of Section 1.6. The second topic is the radiation condition, which is required for problems set in unbounded domains to discriminate between outgoing and incoming waves.

The aim of the last section is to recall the basic notions of energy in the context of Maxwell's equations. In particular, notions such as electromagnetic energy flow, Poynting vector and energy conservation are defined.

We conclude this introductory chapter by providing a set of bibliographical references.

1.1 Electromagnetic fields and Maxwell's equations

We present the electromagnetic fields in their time-dependent form, as the solutions to Maxwell's equations. The various components of the electric and of the magnetic fields are related to source terms by either a set of integral equations or a set of first-order partial differential equations. Then, we study the constitutive relations, which provide additional relations for the electromagnetic fields. With this set of equations – differential Maxwell equations and constitutive relations – we can state that, starting from a given configuration, the electromagnetic fields (exist and) evolve in a unique way. We also expose another formulation, called the potential formulation, with a reduced number of unknowns, which can be interpreted as primitives of the electromagnetic fields. Finally, we conclude with a brief study of conducting/insulating media.

[1] Unless otherwise specified, in this chapter, a *domain* is an open region of space. Another meaning is given for the mathematical studies, starting in Chapter 2.

1.1.1 Integral Maxwell equations

The propagation of the electromagnetic fields in continuum media are described using four space- and time-dependent functions. If we respectively denote by $\boldsymbol{x} = (x_1, x_2, x_3)$ and t the space and time variables, these four $\mathbb{R}^3$-valued, or *vector*-valued, functions defined in time-space $\mathbb{R} \times \mathbb{R}^3$ are

1. the *electric field* $\boldsymbol{E}$,
2. the *magnetic induction* $\boldsymbol{B}$,
3. the *magnetic field*[2] $\boldsymbol{H}$,
4. the *electric displacement* $\boldsymbol{D}$.

These vector functions are governed by the *integral Maxwell equations* below. These four equations are respectively called *Ampère's law*, *Faraday's law*, *Gauss's law* and the *absence of magnetic monopoles*. They read as (system of units SI)

$$\frac{d}{dt}\left(\int_S \boldsymbol{D}\cdot\boldsymbol{dS}\right) - \int_{\partial S} \boldsymbol{H}\cdot\boldsymbol{dl} = -\int_S \boldsymbol{J}\cdot\boldsymbol{dS}, \tag{1.1}$$

$$\frac{d}{dt}\left(\int_{S'} \boldsymbol{B}\cdot\boldsymbol{dS}\right) + \int_{\partial S'} \boldsymbol{E}\cdot\boldsymbol{dl} = 0, \tag{1.2}$$

$$\int_{\partial V} \boldsymbol{D}\cdot\boldsymbol{dS} = \int_V \varrho\, dV, \tag{1.3}$$

$$\int_{\partial V'} \boldsymbol{B}\cdot\boldsymbol{dS} = 0. \tag{1.4}$$

Above, S, S' are any surface of $\mathbb{R}^3$, and V, V' are any volume of $\mathbb{R}^3$. One can write elements $\boldsymbol{dS}$ and $\boldsymbol{dl}$ as $\boldsymbol{dS} = \boldsymbol{n}\, dS$ and $\boldsymbol{dl} = \boldsymbol{\tau}\, dl$, where $\boldsymbol{n}$ and $\boldsymbol{\tau}$ are, respectively, the unit outward normal vector to S and the unit tangent vector to the curve ∂S. When S is the closed surface bounding a volume, then $\boldsymbol{n}$ is pointing outward from the enclosed volume. Similarly, the unit tangent vector to ∂S is pointing in the direction given by the right-hand rule.
There are two *source terms*, respectively, ϱ and $\boldsymbol{J}$. ϱ is an $\mathbb{R}$-valued, or *scalar*-valued, function called the electrostatic *charge density*. It is a non-vanishing function in the presence of electric charges. $\boldsymbol{J}$ is an $\mathbb{R}^3$-valued function called the *current density*. It is a non-vanishing function as soon as there exists a charge displacement, or in other words, an electric current. Now, take the time-derivative of Eq. (1.3) and consider $S = \partial V$ in Eq. (1.1): by construction, S is a closed surface ($\partial S = \emptyset$), so that these data satisfy the *integral charge conservation equation*

$$\frac{d}{dt}\left(\int_V \varrho\, dV\right) + \int_{\partial V} \boldsymbol{J}\cdot\boldsymbol{dS} = 0\,. \tag{1.5}$$

Again, V is any volume of $\mathbb{R}^3$.

[2] $\boldsymbol{H}$ is sometimes called the *magnetizing field*.

1.1.2 Equivalent reformulation of Maxwell's equations

Starting from the integral form of Maxwell's equations (1.1-1.4), one can reformulate them in a differential form,[3] with the help of Stokes and Ostrogradsky formulas

$$\int_S \mathbf{curl}\, \boldsymbol{F} \cdot \boldsymbol{dS} = \int_{\partial S} \boldsymbol{F} \cdot \boldsymbol{dl} \text{ and } \int_V \operatorname{div} \boldsymbol{F}\, dV = \int_{\partial V} \boldsymbol{F} \cdot \boldsymbol{dS}.$$

One easily derives the *differential Maxwell equations* (system of units SI):

$$\frac{\partial \boldsymbol{D}}{\partial t} - \mathbf{curl}\, \boldsymbol{H} = -\boldsymbol{J}, \tag{1.6}$$

$$\frac{\partial \boldsymbol{B}}{\partial t} + \mathbf{curl}\, \boldsymbol{E} = 0, \tag{1.7}$$

$$\operatorname{div} \boldsymbol{D} = \varrho, \tag{1.8}$$

$$\operatorname{div} \boldsymbol{B} = 0. \tag{1.9}$$

The *differential charge conservation equation* can be expressed as

$$\frac{\partial \varrho}{\partial t} + \operatorname{div} \boldsymbol{J} = 0\,. \tag{1.10}$$

However, the above set of equations is not equivalent to the integral set of equations. As a matter of fact, two notions are missing.

The first one is related to the behavior of the fields across an *interface* between two different media. Let Σ be such an interface.
Starting from the volumic integral equations (1.3)-(1.4), we consider thin volumes V_ϵ crossing the interface. As ϵ goes to zero, their height goes to zero, and so does the area of their top and bottom faces (parallel to the interface), with proper scaling. The top and bottom faces are disks whose radius is proportional to ϵ, while the height is proportional to ϵ^2. As a consequence, the area of the lateral surface is proportional to ϵ^3 and its contribution is negligible as ϵ goes to zero. Passing to the limit in Eq. (1.3) and Eq. (1.4) then provides some information on the jump of the normal (with respect to Σ) components of $\boldsymbol{D}$ and $\boldsymbol{B}$:

$$[\boldsymbol{D} \cdot \boldsymbol{n}_\Sigma]_\Sigma = \sigma_\Sigma,\ [\boldsymbol{B} \cdot \boldsymbol{n}_\Sigma]_\Sigma = 0\,. \tag{1.11}$$

Above, $[f]_\Sigma$ denotes the jump across the interface $f_{top} - f_{bottom}$, and $\boldsymbol{n}_\Sigma$ is the unit normal vector to Σ going from bottom to top. The right-hand side σ_Σ corresponds to the idealized *surface charge density* on Σ: formally, $\varrho = \sigma_\Sigma \delta_\Sigma$([4]).

[3] The standard differential operators **curl**, div, **grad**, and Δ are mathematically defined in §1.5.1.

[4] By definition, δ_Σ is the surface Dirac mass on Σ, so one has $\int \varrho v = \int_\Sigma \sigma_\Sigma v_{|\Sigma}\, dS$ for *ad hoc* functions v.

Starting from Eqs. (1.1)-(1.2), the reasoning is similar. For the tangential components, one gets

$$[\boldsymbol{n}_\Sigma \times \boldsymbol{E}]_\Sigma = 0, \ [\boldsymbol{n}_\Sigma \times \boldsymbol{H}]_\Sigma = \boldsymbol{j}_\Sigma \,, \tag{1.12}$$

with $\boldsymbol{j}_\Sigma$ the (idealized) *surface current density* on Σ ($\boldsymbol{j}_\Sigma$ is tangential to Σ). Finally, if div_Σ denotes the surface divergence, or tangential divergence, operator, integral charge conservation equation (1.5) yields

$$\frac{\partial \sigma_\Sigma}{\partial t} + \mathrm{div}_\Sigma \, \boldsymbol{j}_\Sigma + [\boldsymbol{J} \cdot \boldsymbol{n}_\Sigma]_\Sigma = 0 \,.$$

The second notion is *topological*. For instance, one can consider that the domain of interest is the exterior of a thick (resistive[5]) wire, or the exterior of a finite set of (perfectly conducting[5]) spheres. In the first case, the domain is not topologically trivial, and in the second one, its boundary is not connected. In both instances, a finite number of relations – derived from homology theory – have to be added to the differential equations (1.6)-(1.9) and the interface relations (1.11)-(1.12) (see Chapter 3 for details). We assume that, by doing so, we obtain a framework that is equivalent to the integral Maxwell equations (1.1)-(1.4).

1.1.3 Constitutive relations

Maxwell's equations are insufficient to characterize the electromagnetic fields completely. The system has to be closed by adding relations that describe the properties of the medium in which the electromagnetic fields propagate. These are the so-called *constitutive relations*, relating, for instance, $\boldsymbol{D}$ and $\boldsymbol{B}$ to $\boldsymbol{E}$ and $\boldsymbol{H}$, namely

$$\boldsymbol{D} = \boldsymbol{D}(\boldsymbol{E}, \boldsymbol{H}) \quad \text{and} \quad \boldsymbol{B} = \boldsymbol{B}(\boldsymbol{E}, \boldsymbol{H}) \,.$$

(We could also choose *a priori* to use such a relation as $\boldsymbol{D} = \boldsymbol{D}(\boldsymbol{E}, \boldsymbol{B})$, etc.) These constitutive relations can be very complex. For this reason, we will make a number of assumptions on the medium (listed below), which lead to generic expressions of the constitutive relations. This will yield three main categories of medium, which are, from the more general to the more specific:

1. the *chiral medium*, a linear and bi-anisotropic medium ;
2. the *perfect medium*, a chiral, non-dispersive and anisotropic medium ;
3. the *inhomogeneous medium*, a perfect and isotropic medium, and its subcategory, the *homogeneous medium*, which is, in addition, spatially homogeneous.

In what follows, $\boldsymbol{E}(t)$ (or $\boldsymbol{B}(t)$, etc.) denotes the value of the electric field on $\mathbb{R}^3$ at time t: $\boldsymbol{x} \mapsto \boldsymbol{E}(t, \boldsymbol{x})$. Let us now list the assumptions about the medium.

[5] See the end of the section.

- The medium is *linear*. This means that its response is linear with respect to electromagnetic inputs (also called excitations later on). In addition, it is expected that when the inputs are small, the response of the medium is also small.
- The medium satisfies a *causality principle*. In other words, the value of $(\boldsymbol{D}(t), \boldsymbol{B}(t))$ depends only on the values of $(\boldsymbol{E}(s), \boldsymbol{H}(s))$ for $s \leq t$.
- The medium satisfies a *time-invariance principle*. Let $\tau > 0$ be given. If the response to $t \mapsto (\boldsymbol{E}(t), \boldsymbol{H}(t))$ is $t \mapsto (\boldsymbol{D}(t), \boldsymbol{B}(t))$, then the response to $t \mapsto (\boldsymbol{E}(t-\tau), \boldsymbol{H}(t-\tau))$ is $t \mapsto (\boldsymbol{D}(t-\tau), \boldsymbol{B}(t-\tau))$.

Note that the first assumption corresponds to a linear approximation of $\boldsymbol{D} = \boldsymbol{D}(\boldsymbol{E}, \boldsymbol{H})$: for electromagnetic fields, whose amplitude is not too large, a first-order Taylor expansion is justified. Furthermore, the smallness requirement can be viewed as a stability condition (with respect to the inputs). An immediate consequence of the second assumption is that, if $(\boldsymbol{E}(s), \boldsymbol{H}(s)) = 0$ for all $s \leq t_0$, then $(\boldsymbol{D}(t_0), \boldsymbol{B}(t_0)) = 0$. Taking all those assumptions into account leads to the constitutive relations

$$\begin{cases} \boldsymbol{D} = \mathbb{c}\boldsymbol{E} + \mathbb{\xi}\boldsymbol{H} + \mathbb{c}_d \star \boldsymbol{E} + \mathbb{\xi}_d \star \boldsymbol{H} \\ \boldsymbol{B} = \mathbb{\zeta}\boldsymbol{E} + \mathbb{\mu}\boldsymbol{H} + \mathbb{\zeta}_d \star \boldsymbol{E} + \mathbb{\mu}_d \star \boldsymbol{H}. \end{cases} \tag{1.13}$$

Let us comment on expression (1.13).
The constitutive parameters $\mathbb{c}$, $\mathbb{\xi}$, $\mathbb{\zeta}$ and $\mathbb{\mu}$ are 3×3 tensor real-valued functions or distributions of the space variable $\boldsymbol{x}$. Indeed, according to the time-invariance principle, these quantities must be independent of t. Among them, $\mathbb{c}$ is called the dielectric tensor, while $\mathbb{\mu}$ is called the tensor of magnetic permeability.
The constitutive parameters $\mathbb{c}_d$, $\mathbb{\xi}_d$, $\mathbb{\zeta}_d$ and $\mathbb{\mu}_d$ are 3×3 tensor real-valued functions of the time and space variables $(t, \boldsymbol{x})$. The notation $\star$ denotes the convolution product, *a priori* with respect to the four variables $(t, \boldsymbol{x})$:

$$(\mathbb{c}_d \star \boldsymbol{E})(t, \boldsymbol{x}) = \int_{s \in \mathbb{R}} \int_{\boldsymbol{y} \in \mathbb{R}^3} \mathbb{c}_d(s, \boldsymbol{y}) \boldsymbol{E}(t-s, \boldsymbol{x}-\boldsymbol{y})\, d\boldsymbol{y}\, ds\,, \text{ etc.}$$

The causality principle implies $\mathbb{c}_d(s) = \mathbb{\xi}_d(s) = \mathbb{\zeta}_d(s) = \mathbb{\mu}_d(s) = 0$, for all $s < 0$. As a consequence, the convolution product reduces to

$$(\mathbb{c}_d \star \boldsymbol{E})(t, \boldsymbol{x}) = \int_0^\infty \int_{\boldsymbol{y} \in \mathbb{R}^3} \mathbb{c}_d(s, \boldsymbol{y}) \boldsymbol{E}(t-s, \boldsymbol{x}-\boldsymbol{y})\, d\boldsymbol{y}\, ds\,, \text{ etc.}$$

Often, the response depends very locally (in space) on the behavior of the input. So, one assumes locality in space in the convolution product, or, in other words, that the integral in $\boldsymbol{y}$ is taken over a "small" volume around the origin. Here, we further restrict this dependence, as we consider that one can (formally) write[6] $\mathbb{c}_d(s, \boldsymbol{y}) = \mathbb{c}_d(s) \otimes \delta_{\boldsymbol{0}}$, etc. We finally reach the expression of the convolution product $\star$

[6] By definition, $\delta_{\boldsymbol{x}_0}$ is the Dirac mass in $\boldsymbol{x}_0$, so one has $\int \varrho_0 v = q_0 v(\boldsymbol{x}_0)$ for *ad hoc* functions v.

$$(\mathbb{e}_d \star \boldsymbol{E})\,(t,\boldsymbol{x}) = \int_0^\infty \mathbb{e}_d(s)\boldsymbol{E}(t-s,\boldsymbol{x})\,ds\,,\ \text{etc.} \tag{1.14}$$

To summarize the above considerations, the constitutive parameters $\mathbb{e}_d$, $\mathbb{f}_d$, $\mathbb{g}_d$ and $\mathbb{m}_d$ are 3×3 tensor real-valued functions of the time variable t which vanish uniformly for strictly negative values of t, and as a consequence, the convolution product $\star$ is performed with respect to positive times only (cf. (1.14)).
To carry on with the comments on (1.13), we note that the right-hand side can be divided into two parts:

$$\begin{cases} \mathbb{e}\boldsymbol{E} + \mathbb{f}\boldsymbol{H} \\ \mathbb{g}\boldsymbol{E} + \mathbb{m}\boldsymbol{H} \end{cases} \tag{1.15}$$

is called the *optical response*. It is instantaneous, since the values of the input are considered only at the current time. The other part,

$$\begin{cases} \mathbb{e}_d \star \boldsymbol{E} + \mathbb{f}_d \star \boldsymbol{H}\,, \\ \mathbb{g}_d \star \boldsymbol{E} + \mathbb{m}_d \star \boldsymbol{H}\,, \end{cases} \tag{1.16}$$

is called the *dispersive response*, hence a notation with an index $_d$. It is dispersive in time, and as such, it models the memory of the medium.

The relations (1.13) with the convolution products as in (1.14) are linear and bi-anisotropic; they model a linear and bi-anisotropic medium, also called a chiral medium. Several simplifying assumptions can be made.

- The medium is *non-dispersive* when the dispersive response (1.16) vanishes. In other words, the response of the medium is purely optical (1.15).
- The medium is *anisotropic* provided that $\mathbb{f} = \mathbb{g} = 0$.
- An anisotropic medium is *isotropic* when, additionally, the 3×3 tensors $\mathbb{e}$ and $\mathbb{m}$ are proportional to the identity matrix: $\mathbb{e} = \varepsilon\mathbb{I}_3$ and $\mathbb{m} = \mu\mathbb{I}_3$.

For an anisotropic medium, the constitutive parameters ε and μ are scalar real-valued functions of $\boldsymbol{x}$: ε and μ are respectively called the *electric permittivity* and the *magnetic permeability* of the medium.

In this monograph, apart from the "general" case of a chiral medium, we shall assume most of the time that the medium is perfect, that is, non-dispersive and anisotropic, or inhomogeneous, that is, perfect and isotropic. In a perfect medium, the constitutive relations read as

$$\boldsymbol{D}(t,\boldsymbol{x}) = \mathbb{e}(\boldsymbol{x})\,\boldsymbol{E}(t,\boldsymbol{x}) \text{ and } \boldsymbol{B}(t,\boldsymbol{x}) = \mathbb{m}(\boldsymbol{x})\,\boldsymbol{H}(t,\boldsymbol{x}),\ \forall (t,\boldsymbol{x}) \in \mathbb{R}\times\mathbb{R}^3\,. \tag{1.17}$$

In this case, the differential Maxwell equations (1.6-1.9) can be written with the unknowns $\boldsymbol{E}$ and $\boldsymbol{H}$. They read as

$$\mathbb{e}\frac{\partial \boldsymbol{E}}{\partial t} - \mathbf{curl}\,\boldsymbol{H} = -\boldsymbol{J}, \tag{1.18}$$

$$\mathbb{\mu}\frac{\partial \boldsymbol{H}}{\partial t} + \mathbf{curl}\,\boldsymbol{E} = 0, \tag{1.19}$$

$$\mathrm{div}(\mathbb{e}\boldsymbol{E}) = \varrho, \tag{1.20}$$

$$\mathrm{div}(\mathbb{\mu}\boldsymbol{H}) = 0. \tag{1.21}$$

To write down Eqs. (1.6-1.9) with the unknowns $\boldsymbol{E}$ and $\boldsymbol{B}$, one has to note that $\mathbb{\mu}$ is necessarily invertible on $\mathbb{R}^3$, since we assumed at the beginning that the constitutive relations could also have been written as $\boldsymbol{H} = \boldsymbol{H}(\boldsymbol{E}, \boldsymbol{B})$... So, Eqs. (1.18-1.21) can be equivalently recast as

$$\mathbb{e}\frac{\partial \boldsymbol{E}}{\partial t} - \mathbf{curl}(\mathbb{\mu}^{-1}\boldsymbol{B}) = -\boldsymbol{J}, \tag{1.22}$$

$$\frac{\partial \boldsymbol{B}}{\partial t} + \mathbf{curl}\,\boldsymbol{E} = 0, \tag{1.23}$$

$$\mathrm{div}(\mathbb{e}\boldsymbol{E}) = \varrho, \tag{1.24}$$

$$\mathrm{div}\,\boldsymbol{B} = 0. \tag{1.25}$$

In an inhomogeneous medium, one simply replaces the tensor fields $\mathbb{e}$ and $\mathbb{\mu}$ with the scalar fields ε and μ in Eqs. (1.18-1.21) or in Eqs. (1.22-1.25).
Finally, if the perfect medium is also isotropic and spatially homogeneous, we say (for short) that it is a homogeneous medium. In a homogeneous medium, the constitutive relations can finally be expressed as

$$\boldsymbol{D}(t, \boldsymbol{x}) = \varepsilon\, \boldsymbol{E}(t, \boldsymbol{x}) \text{ and } \boldsymbol{B}(t, \boldsymbol{x}) = \mu\, \boldsymbol{H}(t, \boldsymbol{x}),\ \forall (t, \boldsymbol{x}) \in \mathbb{R} \times \mathbb{R}^3\,.$$

Above, ε and μ are constant numbers. Remark that vacuum is a particular case of a homogeneous medium, which will be often considered in this monograph. The electric permittivity and the magnetic permeability are, in that case, denoted as ε_0 ($\varepsilon_0 = (36\pi.10^9)^{-1}\mathrm{F\,m^{-1}}$) and μ_0 ($\mu_0 = 4\pi.10^{-7}\mathrm{H\,m^{-1}}$), and we have the relation $c^2\varepsilon_0\mu_0 = 1$, where $c = 3.10^8\mathrm{m\,s^{-1}}$ is the *speed of light*. The differential Maxwell equations become, in this case,

$$\frac{\partial \boldsymbol{E}}{\partial t} - c^2\ \mathbf{curl}\,\boldsymbol{B} = -\frac{1}{\varepsilon_0}\boldsymbol{J}, \tag{1.26}$$

$$\frac{\partial \boldsymbol{B}}{\partial t} + \mathbf{curl}\,\boldsymbol{E} = 0, \tag{1.27}$$

$$\mathrm{div}\,\boldsymbol{E} = \frac{1}{\varepsilon_0}\varrho, \tag{1.28}$$

$$\mathrm{div}\,\boldsymbol{B} = 0. \tag{1.29}$$

1.1.4 Solvability of Maxwell's equations

What about the proof of the existence of electromagnetic fields on $\mathbb{R}^3$?
To begin with, there exist many "experimental proofs" of the existence of

electromagnetic fields! These experiments actually led to the definition of the equations that govern electromagnetic phenomena, and of the related electromagnetic fields, by Maxwell and many others during the 19th and 20th centuries. So, it is safe to assume that these fields exist, the challenge being mathematical and computational nowadays...

Where does the theory originate? Let us give a brief account of one of the more elementary (mathematically speaking!) results on charged particles at rest (results have also been obtained for circuits, involving currents).

The fundamental experimental results we report here were obtained by Charles Augustin de Coulomb in 1785, when he studied repulsive or attractive forces between charged bodies, small elder balls. In the air – a homogeneous medium ($\varepsilon = \varepsilon_a$) – let us consider two charged particles, $part_1$ and $part$, at rest. Their respective positions are $\boldsymbol{x}_1$ and $\boldsymbol{x}$, whereas their respective electric charges are q_1 and q. In short, Coulomb's results (now known as Coulomb's law) state that the two particles *interact* electrically[7] with one another, in the following way. The force $\boldsymbol{F}$ acting on particle $part$ and originating from particle $part_1$ is such that:

- it is repulsive if $q_1 q > 0$, and attractive if $q_1 q < 0$;
- its direction is parallel to the line joining the two particles;
- its modulus is proportional to $|\boldsymbol{x} - \boldsymbol{x}_1|^{-2}$;
- its modulus is also proportional to q_1 and q.

If one sets the proportionality coefficient to (the modern) $1/4\pi\varepsilon_a$, one finds that

$$\boldsymbol{F}(\boldsymbol{x}) = \frac{q\, q_1}{4\,\pi\,\varepsilon_a} \frac{(\boldsymbol{x} - \boldsymbol{x}_1)}{|\boldsymbol{x} - \boldsymbol{x}_1|^3}.$$

Now, define the electric field as the force per unit charge. One infers that

$$\boldsymbol{E}(\boldsymbol{x}) = \frac{q_1}{4\,\pi\,\varepsilon_a} \frac{(\boldsymbol{x} - \boldsymbol{x}_1)}{|\boldsymbol{x} - \boldsymbol{x}_1|^3}.$$

Interestingly, it turns out, after some elementary computations, that one has

$$\boldsymbol{E} = -\,\mathbf{grad}_{\boldsymbol{x}}\,\phi_1, \text{ with } \phi_1(\boldsymbol{x}) = \frac{1}{4\,\pi\,\varepsilon_a} \frac{q_1}{|\boldsymbol{x} - \boldsymbol{x}_1|}.$$

In particular, one gets that $\mathbf{curl}\,\boldsymbol{E} = 0$, which bears a striking resemblance to Faraday's law (1.27) for a system at rest. Moreover, after another series of simple computations, one finds that $\operatorname{div}\boldsymbol{E} = \varrho_1/\varepsilon_a$, where ϱ_1 is equal to $\varrho_1(\boldsymbol{x}) = q_1\delta_{\boldsymbol{x}_1}(\boldsymbol{x})$: in other words, the charge density is created by the particle $part_1$, so Gauss's law (1.28) is satisfied too...
Furthermore, Coulomb proved that the total force produced by N charged particles on an $(N+1)$-th particle (all particles being at rest) is equal to the

[7] Or: electrostatically.

sum of the individual two-particle forces, so the same conclusions can actually be drawn for any discrete system of charged particles at rest! The formula for the charge density is then $\varrho_N(\boldsymbol{x}) = \sum_{1\le i\le N} q_i \delta_{\boldsymbol{x}_i}(\boldsymbol{x})$, while

$$\boldsymbol{E} = -\,\mathbf{grad}_{\boldsymbol{x}}\,\phi_N, \text{ with } \phi_N(\boldsymbol{x}) = \frac{1}{4\,\pi\,\varepsilon_a}\sum_{1\le i\le N}\frac{q_i}{|\boldsymbol{x}-\boldsymbol{x}_i|}\,. \tag{1.30}$$

See §1.3 and §1.7 for continuations.

Now, we focus on the mathematical existence of electromagnetic fields. Evidently, we note that one can devise by hand some solutions to Maxwell's equations for well-chosen right-hand sides (using, for instance, Fourier Transform or Green functions, cf. Chapter 6 of [142]). However, one can also solve this set of equations in more general and more systematic ways. We give two examples below.

The first one deals with the mathematical existence of the electromagnetic fields, assuming a homogeneous medium in $\mathbb{R}^3$. More precisely, one adds *initial conditions* to Eqs. (1.26-1.29), which read as

$$\boldsymbol{E}(0) = \boldsymbol{E}_0, \qquad \boldsymbol{B}(0) = \boldsymbol{B}_0. \tag{1.31}$$

(Above, we assume that the problem begins at time $t = 0$.)
The couple $(\boldsymbol{E}_0, \boldsymbol{B}_0)$ constitutes part of the data, the other part being $t \mapsto (\boldsymbol{J}(t), \varrho(t))$, for $t \ge 0$. The set of equations (1.26-1.29) together with the initial conditions (1.31) is called a Cauchy problem. Based on the semi-group theory, one can prove that there exists one, and only one, solution $t \mapsto (\boldsymbol{E}(t), \boldsymbol{B}(t))$, for $t \ge 0$, to this Cauchy problem. Moreover, it depends continuously on the data (the so-called stability condition). In a more compact way, whenever an existence, uniqueness and continuous dependence with respect to the data result is achieved, one says that the related problem is *well-posed*: in our case, the Cauchy problem set in all space $\mathbb{R}^3$ made of a homogeneous medium is well-posed. Obviously, once the existence and uniqueness of $(\boldsymbol{E}, \boldsymbol{B})$ is achieved, the same conclusion follows for $(\boldsymbol{D}, \boldsymbol{H}) = (\varepsilon_0\,\boldsymbol{E}, \mu_0^{-1}\,\boldsymbol{B})$ (see Chapter 5 for more details).
Here, one has to be very careful, since the uniqueness and continuous dependence of the solution require a (mathematical) measure of the electromagnetic fields and of the data. To achieve these results, one uses the quantity W_{vac} (see below) as the measure for the fields. In this case, it reads as

$$W_{vac}(t) = \int_{\mathbb{R}^3} \frac{1}{2}\{\varepsilon_0|\boldsymbol{E}(t,\boldsymbol{x})|^2 + \frac{1}{\mu_0}|\boldsymbol{B}(t,\boldsymbol{x})|^2\}\,d\boldsymbol{x}. \tag{1.32}$$

It turns out that W_{vac} defines the electromagnetic energy in this kind of medium. For more details on energy-related matters, we refer the reader to the upcoming §1.7.

The second result deals with the existence of the electromagnetic fields, assuming now a general chiral medium in $\mathbb{R}^3$. By using the same mathematical tools (in a more involved way, see [141]), one can also derive a well-posedness result. To measure the fields, one resorts to an integral similar to (1.32), namely

$$W_2(t) = \int_{\mathbb{R}^3} \{|\boldsymbol{E}(t,\boldsymbol{x})|^2 + |\boldsymbol{H}(t,\boldsymbol{x})|^2\}\, d\boldsymbol{x}.$$

Note that this measure is used to define the stability condition, which has been previously mentioned. Once the existence and uniqueness of $(\boldsymbol{E},\boldsymbol{H})$ is achieved, the same conclusion follows for $(\boldsymbol{D},\boldsymbol{B})$, according to the constitutive relations (1.13).

Remark 1.1.1 *In a bounded domain, one can derive similar results, with a variety of mathematical tools. We refer the reader again to Chapter 5.*

1.1.5 Potential formulation of Maxwell's equations

Let us introduce another formulation of Maxwell's equations. For the sake of simplicity, we assume that we are in vacuum (in all space, $\mathbb{R}^3$), with Maxwell's equations written in differential form as Eqs. (1.26-1.29). According to the divergence-free property of the magnetic induction $\boldsymbol{B}$, there exists a *vector potential* $\boldsymbol{A}$ such that

$$\boldsymbol{B} = \mathbf{curl}\,\boldsymbol{A}\ .$$

Plugging this into *Faraday's law* (1.27), we obtain

$$\mathbf{curl}(\frac{\partial \boldsymbol{A}}{\partial t} + \boldsymbol{E}) = 0\ .$$

Then, there exists a *scalar potential* ϕ such that

$$\frac{\partial \boldsymbol{A}}{\partial t} + \boldsymbol{E} = -\,\mathbf{grad}\,\phi\ . \tag{1.33}$$

This allows us to introduce a formulation in the variables $(\boldsymbol{A},\phi)$ - the vector potential and the scalar potential, respectively - since it holds there that

$$\boldsymbol{E} = -\,\mathbf{grad}\,\phi - \frac{\partial \boldsymbol{A}}{\partial t}\ , \tag{1.34}$$

$$\boldsymbol{B} = \mathbf{curl}\,\boldsymbol{A}\ . \tag{1.35}$$

This formulation requires only the four unknowns $\boldsymbol{A}$ and ϕ, instead of the six unknowns for the $\boldsymbol{E}$ and $\boldsymbol{B}$-field formulation. Moreover, any couple $(\boldsymbol{E},\boldsymbol{B})$ defined by Eqs. (1.34-1.35) automatically satisfies Faraday's law and the absence of free magnetic monopoles. From this (restrictive) point of view, the potentials $\boldsymbol{A}$ and ϕ are independent of one another. Now, if one takes into account Ampère's and Gauss's laws, constraints appear in the choice of $\boldsymbol{A}$

and ϕ (see Eqs (1.37-1.38) below). Also, the vector potential $\boldsymbol{A}$ governed by Eq. (1.35) is determined up to a gradient of a scalar function: there lies an indetermination that has to be removed. On the other hand, for the scalar potential, the indetermination is up to a constant: it can be removed simply by imposing a vanishing limit at infinity. Several approaches can be used to overcome this difficulty. In what follows, two commonly used methods are exposed. If one recalls the identity

$$\mathbf{curl}\,\mathbf{curl} - \mathbf{grad}\,\mathrm{div} \equiv -\Delta\,, \tag{1.36}$$

then Eqs. (1.26) and (1.28), with the electromagnetic fields expressed as in (1.34-1.35), yield

$$\frac{\partial^2 \boldsymbol{A}}{\partial t^2} - c^2 \Delta \boldsymbol{A} + \mathbf{grad}(c^2\,\mathrm{div}\,\boldsymbol{A} + \frac{\partial \phi}{\partial t}) = \frac{1}{\varepsilon_0}\boldsymbol{J}\ , \tag{1.37}$$

$$-\frac{\partial}{\partial t}(\mathrm{div}\,\boldsymbol{A}) - \Delta\phi = \frac{1}{\varepsilon_0}\varrho\ . \tag{1.38}$$

These equations suggest that one consider either one of the following two conditions, each one of them helpful in its own way for removing the indetermination.

Lorentz gauge

Let us take $(\boldsymbol{A}, \phi)$ such that the gradient-term in equation (1.37) vanishes:

$$c^2\,\mathrm{div}\,\boldsymbol{A} + \frac{\partial \phi}{\partial t} = 0\ .$$

Hence, Eqs. (1.37-1.38) are written within the Lorentz gauge framework as

$$\frac{\partial^2 \boldsymbol{A}}{\partial t^2} - c^2 \Delta \boldsymbol{A} = \frac{1}{\varepsilon_0}\boldsymbol{J}\ ,$$
$$\frac{\partial^2 \phi}{\partial t^2} - c^2 \Delta \phi = \frac{c^2}{\varepsilon_0}\varrho\ .$$

This gauge is often used for theoretical matters, since it amounts to solving two wave equations, a vector one for $\boldsymbol{A}$ and a scalar one for ϕ. Remark as well that these equations are independent of the coordinate system. This property is useful for many instances, such as, for example, those originating from the theory of relativity.

Coulomb gauge

This consists in setting the first term in Eq. (1.38) to zero. We thus consider $\boldsymbol{A}$ such that

$$\operatorname{div} \boldsymbol{A} = 0 \ .$$

Eqs. (1.37-1.38) are now written as

$$\frac{\partial^2 \boldsymbol{A}}{\partial t^2} - c^2 \Delta \boldsymbol{A} = \frac{1}{\varepsilon_0} \boldsymbol{J} - \mathbf{grad}(\frac{\partial \phi}{\partial t}) \ ,$$
$$\Delta \phi = -\frac{1}{\varepsilon_0} \varrho \ .$$

Choosing such a gauge yields a potential ϕ, which is related to ϱ by a static equation (however, ϕ and ϱ can be time-dependent). This model is often used when $\boldsymbol{A}$ is irrelevant, because electrostatic phenomena dominate. This is usually the case in plasma models (see, for instance, §1.4.5).

Remark 1.1.2 *The calculations formally performed here are justified for problems posed in all space. Actually, difficulties appear for the same problems posed in a bounded domain. The first ones are due to the topological nature of the domain. The other ones revolve around the definition of compatible boundary conditions on the potentials* $(\boldsymbol{A}, \phi)$*, with respect to those of the electromagnetic fields* $(\boldsymbol{E}, \boldsymbol{B})$*. For an extended discussion, we refer the reader to Chapter 3.*

1.1.6 Conducting and insulating media

For a medium that is also a *conductor*, we have to describe the property of the medium in terms of conductivity. This leads to expression of the current density $\boldsymbol{J}$ as a function of the electric field $\boldsymbol{E}$

$$\boldsymbol{J} = \boldsymbol{J}(\boldsymbol{E}) \ .$$

Assuming that the medium is linear, the current density $\boldsymbol{J}$ and the electric field $\boldsymbol{E}$ are governed by *Ohm's law*

$$\boldsymbol{J} = \mathbb{\sigma} \boldsymbol{E} + \mathbb{\sigma}_d \star \boldsymbol{E} \, ,$$

where $\mathbb{\sigma}$ is a 3×3 tensor real-valued function of the space variable $\boldsymbol{x}$, which is called the tensor of conductivity. The quantity $\mathbb{\sigma}_d$ is also a 3×3 tensor real-valued function, but of the time variable t. The convolution product is similar to (1.14): it is realized in time, enforcing the causality principle. Similarly to the constitutive relations, we shall usually restrict our studies to a perfect medium. In this case, Ohm's law is expressed as

$$\boldsymbol{J}(t, \boldsymbol{x}) = \mathbb{\sigma} \, \boldsymbol{E}(t, \boldsymbol{x}) \ . \tag{1.39}$$

If, in addition, the medium is inhomogeneous, $\mathbb{\sigma} = \sigma \mathbb{I}_3$ and σ is called the *conductivity*. In the particular case of a homogeneous medium, the conductivity is independent of $\boldsymbol{x}$. Alternatively, one could introduce the *resistivity* σ^{-1} of

the medium, together with the notion of a *resistive medium*.

In most cases, the current density can be divided into two parts,

$$\boldsymbol{J} = \boldsymbol{J}_{ext} + \boldsymbol{J}_{\sigma} \,,$$

where $\boldsymbol{J}_{ext}$ denotes an externally imposed current density, and $\boldsymbol{J}_{\sigma}$ is the current density related to the conductivity $\mathfrak{o}$ of the medium by the relation (1.39). As a consequence, one has to modify Ampère's law (1.6), which can be read as

$$\mathfrak{e}\frac{\partial \boldsymbol{E}}{\partial t} + \mathfrak{o}\boldsymbol{E} - \mathbf{curl}\,\boldsymbol{H} = -\boldsymbol{J}_{ext} \,. \tag{1.40}$$

On the one hand, if the medium is an *insulator* – $\mathfrak{o} = 0$ – there is no electrically generated current in this medium. An insulator is also called a *dielectric*. So, one has, in the absence of an externally imposed current, $\boldsymbol{J} = 0$.
On the other hand, we will often deal with a perfectly conducting medium, that is, a *perfect conductor*, in which the conductivity is assumed to be "infinite": all electromagnetic fields (and in particular, $\boldsymbol{E}$ and $\boldsymbol{B}$) are uniformly equal to zero in such a medium. This ideal situation is often used to model metals. Let us discuss the validity of this statement, which is related to the *skin depth* δ inside a conducting medium. This length is the characteristic scale on which the electromagnetic fields vanish inside the conductor, provided its thickness is locally much larger than δ. The fields decay exponentially relative to the depth (distance from the surface), and so one can consider that they vanish uniformly at a depth larger than a few δ. Note that this behavior is not contradictory to the accumulation of charges and/or currents at the surface of the conductor, the so-called *skin effect*. The skin depth depends on the frequency ν of the inputs and on the conductivity of the medium: δ is proportional to $(\sigma\,\nu)^{-1/2}$ (see §1.2.3 for details). For radio signals in the 1–100 MHz frequency range, δ varies from 7 to 70 10^{-6} m for copper. In the case of a perfect conductor, we simply assume that the skin depth is equal to zero for all inputs. As we noted above, one can have non-zero charge and/or current densities at the surface of a perfect conductor: this is the *infinite skin effect*.

1.2 Stationary equations

It can happen that one studies fields and sources for which the behavior in time is explicitly known. For instance, time-periodic solutions to Maxwell's equations, respectively called time-harmonic electromagnetic fields and time-harmonic Maxwell equations. We first study the basic properties related to these fields and equations. Next, we address the topic of electromagnetic plane waves, which are a class of particular solutions, widely used in theoretical physics and in applications, for instance, to assess numerical methods for the time-harmonic Maxwell equations, or to build radiation conditions.

1.2.1 Time-harmonic Maxwell equations

We deal with time-periodic, or time-harmonic, solutions to Maxwell's equations in a perfect medium (here, $\mathbb{R}^3$), with a known time dependence $\exp(-\imath\omega t)$, $\omega \in \mathbb{R}$. Basically, it is assumed that the time Fourier Transform of the complex-valued fields, for instance,

$$\hat{\boldsymbol{E}}(\omega', \boldsymbol{x}) = (2\pi)^{-1} \int_{s\in\mathbb{R}} \boldsymbol{E}^c(s, \boldsymbol{x}) \exp(\imath\omega' s)\, ds\,,$$

is of the form $\hat{\boldsymbol{E}}(\omega', \boldsymbol{x}) = \delta(\omega' - \omega) \otimes \boldsymbol{e}(\boldsymbol{x})$, so that taking the reverse time Fourier Transform yields

$$\boldsymbol{E}^c(t, \boldsymbol{x}) = \int_{\eta\in\mathbb{R}} \hat{\boldsymbol{E}}(\eta, \boldsymbol{x}) \exp(-\imath\eta t)\, d\eta = \boldsymbol{e}(\boldsymbol{x}) \exp(-\imath\omega t).$$

The real-valued – physical – solutions are then written as

$$\boldsymbol{E}(t, \boldsymbol{x}) = \Re(\boldsymbol{e}(\boldsymbol{x}) \exp(-\imath\omega t))\,, \tag{1.41}$$
$$\boldsymbol{H}(t, \boldsymbol{x}) = \Re(\boldsymbol{h}(\boldsymbol{x}) \exp(-\imath\omega t))\,, \tag{1.42}$$
$$\boldsymbol{D}(t, \boldsymbol{x}) = \Re(\boldsymbol{d}(\boldsymbol{x}) \exp(-\imath\omega t))\,, \tag{1.43}$$
$$\boldsymbol{B}(t, \boldsymbol{x}) = \Re(\boldsymbol{b}(\boldsymbol{x}) \exp(-\imath\omega t))\,. \tag{1.44}$$

Equivalently, one has $\boldsymbol{E}(t, \boldsymbol{x}) = \frac{1}{2}\{\boldsymbol{e}(\boldsymbol{x}) \exp(-\imath\omega t) + \overline{\boldsymbol{e}}(\boldsymbol{x}) \exp(\imath\omega t))\}$, etc. As a consequence, one can restrict the study of time-harmonic fields to positive values of ω, which is called the pulsation. It is related to the frequency ν by the formula $\omega = 2\pi\nu$.

Remark 1.2.1 *Formally, for a pulsation ω equal to zero, one gets static fields, in the sense that they are independent of time. In this way, static fields are a "special instance" among stationary fields.*

The data $\varrho(t, \boldsymbol{x})$ and $\boldsymbol{J}(t, \boldsymbol{x})$ are also time-harmonic:

$$\varrho(t, \boldsymbol{x}) = \Re(r(\boldsymbol{x}) \exp(-\imath\omega t))\,, \tag{1.45}$$
$$\boldsymbol{J}(t, \boldsymbol{x}) = \Re(\boldsymbol{j}(\boldsymbol{x}) \exp(-\imath\omega t))\,. \tag{1.46}$$

Evidently, the time dependence is identical between the data and the solution. Here, we just used straightforward computations!
On the other hand, what happens when one only knows that the data are time-harmonic (without any information on the fields)? In other words, how do the fields, seen as the solution to Maxwell's equations, behave? The answer, which is much more subtle than the above-mentioned computations, is known as the *limiting amplitude principle*. It is important to note that this principle can be rigorously/mathematically justified, cf. [105]. It turns out that, provided the data is compactly supported in space, the solution adopts a time-harmonic behavior as t goes to infinity, in bounded regions (of $\mathbb{R}^3$). So,

common sense proves true in this case. Provided that ϱ and $\boldsymbol{J}$ behave as in Eqs. (1.45-1.46), then the electromagnetic fields behave as in Eqs. (1.41-1.44) when $t \to +\infty$, with the *same* pulsation ω.

The *time-harmonic Maxwell equations* are

$$\imath\omega\boldsymbol{d} + \mathbf{curl}\,\boldsymbol{h} = \boldsymbol{j}, \tag{1.47}$$
$$-\imath\omega\boldsymbol{b} + \mathbf{curl}\,\boldsymbol{e} = 0, \tag{1.48}$$
$$\operatorname{div}\boldsymbol{d} = r, \tag{1.49}$$
$$\operatorname{div}\boldsymbol{b} = 0, \tag{1.50}$$

where the charge conservation equation (1.10) becomes

$$-\imath\omega r + \operatorname{div}\boldsymbol{j} = 0\,. \tag{1.51}$$

Since the medium is perfect, we have

$$\boldsymbol{d}(\boldsymbol{x}) = \mathbb{e}(\boldsymbol{x})\boldsymbol{e}(\boldsymbol{x}) \qquad \text{and} \qquad \boldsymbol{b}(\boldsymbol{x}) = \mathbb{p}(\boldsymbol{x})\boldsymbol{h}(\boldsymbol{x})\,,$$

so that we can express the time-harmonic Maxwell equations in the electromagnetic fields $\boldsymbol{e}$ and $\boldsymbol{b}$, as

$$\imath\omega\mathbb{e}\boldsymbol{e} + \mathbf{curl}(\mathbb{p}^{-1}\boldsymbol{b}) = \boldsymbol{j}, \tag{1.52}$$
$$-\imath\omega\boldsymbol{b} + \mathbf{curl}\,\boldsymbol{e} = 0, \tag{1.53}$$
$$\operatorname{div}\mathbb{e}\boldsymbol{e} = r, \tag{1.54}$$
$$\operatorname{div}\boldsymbol{b} = 0. \tag{1.55}$$

Clearly, one of the fields can be removed in (1.52) and (1.53) to give us

$$-\omega^2\mathbb{e}\boldsymbol{e} + \mathbf{curl}(\mathbb{p}^{-1}\,\mathbf{curl}\,\boldsymbol{e}) = \imath\omega\boldsymbol{j}, \tag{1.56}$$
$$-\omega^2\boldsymbol{b} + \mathbf{curl}(\mathbb{e}^{-1}\,\mathbf{curl}(\mathbb{p}^{-1}\boldsymbol{b})) = \mathbf{curl}(\mathbb{e}^{-1}\boldsymbol{j}). \tag{1.57}$$

On the one hand, the set of equations (1.56-1.57) is often called a *fixed frequency problem*. Given[8] $\omega \neq 0$ and non-vanishing data $(\boldsymbol{j}, r)$, find the solution $(\boldsymbol{e}, \boldsymbol{b})$. The conditions (1.54) and (1.55) on the divergence of the electromagnetic fields are contained in Eqs. (1.56-1.57): simply take their respective divergence, and use the charge conservation equation (1.51) for the electric field, bearing in mind that $\omega \neq 0$.

On the other hand, one can assume that the current and charge densities vanish. The equations read as

[8] To deserve the label *fixed frequency problem*, one assumes a non-vanishing value of the pulsation. Otherwise, one solves a static problem, cf. §1.4.1.

$$-\omega^2 \mathbb{e}\boldsymbol{e} + \mathbf{curl}(\mathbb{m}^{-1}\,\mathbf{curl}\,\boldsymbol{e}) = 0, \tag{1.58}$$
$$-\omega^2 \boldsymbol{b} + \mathbf{curl}(\mathbb{e}^{-1}(\mathbf{curl}(\mathbb{m}^{-1}\boldsymbol{b})) = 0, \tag{1.59}$$
$$\operatorname{div}(\mathbb{e}\boldsymbol{e}) = 0, \tag{1.60}$$
$$\operatorname{div}\boldsymbol{b} = 0. \tag{1.61}$$

As noted earlier, the condition on the divergence of the electromagnetic fields would be implicit in Eqs. (1.58-1.59) *under the condition* $\omega \neq 0$. However, one does not make this assumption here. The set of equations (1.58-1.61) is usually called an *unknown frequency problem*: find the triples $(\omega, \boldsymbol{e}, \boldsymbol{b})$ with $(\boldsymbol{e}, \boldsymbol{b}) \neq (0, 0)$ governed by (1.58-1.61). The same set of equations can be considered as an *eigenvalue problem*, also called an *eigenproblem*. Here, the pulsation ω is not the eigenvalue. More precisely, its square ω^2 is related to the eigenvalue. For that, it is useful (but not mandatory, see Chapter 8) to assume that the medium is homogeneous, so that ε and μ are constants, as, for instance, in vacuum.

Remark 1.2.2 *The unknown frequency problem models* free vibrations *of the electromagnetic fields. On the other hand, the fixed frequency problem models* sustained vibrations *(via a periodic input) of the fields.*

In a homogeneous medium, eliminating, as previously, the $\boldsymbol{e}$-field or the $\boldsymbol{b}$-field from one of the above Eqs. (1.52-1.53) yields, with $\boldsymbol{f}_e = \imath\omega\mu\boldsymbol{j}$ and $\boldsymbol{f}_b = \mu\,\mathbf{curl}\,\boldsymbol{j}$ as the (possibly vanishing) right-hand sides,

$$\mathbf{curl}\ \mathbf{curl}\ \boldsymbol{e} - \lambda\boldsymbol{e} = \boldsymbol{f}_e\,, \qquad \mathbf{curl}\ \mathbf{curl}\ \boldsymbol{b} - \lambda\boldsymbol{b} = \boldsymbol{f}_b\,,$$

where

$$\lambda = (\varepsilon\mu)\omega^2\,. \tag{1.62}$$

Using the identity (1.36) leads to, with $\boldsymbol{f}'_e = -\boldsymbol{f}_e + \varepsilon^{-1}\,\mathbf{grad}\,r$, $\boldsymbol{f}'_b = -\boldsymbol{f}_b$,

$$\lambda\boldsymbol{e} + \Delta\boldsymbol{e} = \boldsymbol{f}'_e\,, \qquad \lambda\boldsymbol{b} + \Delta\boldsymbol{b} = \boldsymbol{f}'_b.$$

From the point of view of the fixed frequency problem ($(\boldsymbol{f}'_e, \boldsymbol{f}'_b) \neq (0, 0)$), this means that each component of the vector fields $\boldsymbol{e}$ or $\boldsymbol{b}$ (here called ψ) is governed by the scalar Helmholtz equation

$$\Delta\psi + \lambda\psi = f\,. \tag{1.63}$$

From the point of view of the eigenvalue problem, (λ, ψ) is simply a couple eigenvalue–eigenvector of the Laplace operator: the pulsation ω is related to the eigenvalue λ by the relation (1.62).

Remark 1.2.3 *It is important to remark that the components are not independent of one another. Indeed, the components are linked by the divergence-free conditions* $\operatorname{div}\boldsymbol{e} = 0$ *and* $\operatorname{div}\boldsymbol{b} = 0$. *As we will see in §1.6, Eq.* (1.63) *plays an important role in establishing the radiation condition, which is widely used in diffraction problems.*

1.2.2 Electromagnetic plane waves

Let us study a particular class of periodic solutions to Maxwell's equations, the *plane waves* solutions, in a homogeneous medium (again, $\mathbb{R}^3$).
Introduce the time-space Fourier Transform of complex-valued fields, for instance,

$$\tilde{\boldsymbol{E}}(\omega', \boldsymbol{k}') = (2\pi)^{-4} \int_{\boldsymbol{y}\in\mathbb{R}^3} \int_{s\in\mathbb{R}} \boldsymbol{E}^c(s, \boldsymbol{y}) \exp(-\imath(\boldsymbol{k}' \cdot \boldsymbol{y} - \omega' s))\, ds\, d\boldsymbol{y}\,.$$

The plane waves can be viewed as the reverse time-space Fourier transform of fields, which possess the following form in the phase space $(\omega', \boldsymbol{k}')$:

$$\tilde{\boldsymbol{E}}(\omega', \boldsymbol{k}') = \boldsymbol{E}_0 \delta(\omega' - \omega) \otimes \delta(\boldsymbol{k}' - \boldsymbol{k}), \qquad \tilde{\boldsymbol{B}}(\omega', \boldsymbol{k}') = \boldsymbol{B}_0 \delta(\omega' - \omega) \otimes \delta(\boldsymbol{k}' - \boldsymbol{k})\,.$$

($\boldsymbol{E}_0$ and $\boldsymbol{B}_0$ both belong to $\mathbb{C}^3$, and $\boldsymbol{k}$ is a vector of $\mathbb{R}^3$, called the wave vector).

From the above, we deduce that the complex-valued plane waves consist of solutions of the form

$$\boldsymbol{E}^c(t, \boldsymbol{x}) = \boldsymbol{E}_0 \exp(\imath(\boldsymbol{k} \cdot \boldsymbol{x} - \omega t))\,, \tag{1.64}$$

$$\boldsymbol{B}^c(t, \boldsymbol{x}) = \boldsymbol{B}_0 \exp(\imath(\boldsymbol{k} \cdot \boldsymbol{x} - \omega t))\,. \tag{1.65}$$

We keep the convention, according to which the physical electromagnetic fields are obtained by taking the real part of (1.64-1.65): for instance,

$$\frac{1}{2}\{\boldsymbol{E}_0 \exp(\imath(\boldsymbol{k} \cdot \boldsymbol{x} - \omega t)) + \overline{\boldsymbol{E}}_0 \exp(-\imath(\boldsymbol{k} \cdot \boldsymbol{x} - \omega t))\}.$$

Again, the pulsation ω takes only positive values.

Remark 1.2.4 *We will examine how the plane waves are involved in obtaining the absorbing boundary conditions (cf. Section 1.6).*

A plane wave propagates. To measure its velocity of propagation, one usually considers the velocity at which a constant *phase* (a phase is the value of $(\boldsymbol{E}^c, \boldsymbol{B}^c)$ at a given time and position) travels. It is called the *phase velocity* and, according to expressions (1.64-1.65), it is equal to

$$v_p(\omega, |\boldsymbol{k}|) = \frac{\omega}{|\boldsymbol{k}|}. \tag{1.66}$$

So, $\boldsymbol{k} \neq 0$. The quantity $|\boldsymbol{k}|$ is called the *wave number*, and $\lambda = 2\pi/|\boldsymbol{k}|$ is the associated *wavelength*. If we let $\boldsymbol{d} \in \mathbb{S}^2$ be the direction of $\boldsymbol{k}$, i.e., $\boldsymbol{k} = |\boldsymbol{k}|\boldsymbol{d}$, we can further define the vector velocity of propagation, $\boldsymbol{v}_p = v_p \boldsymbol{d}$.

Let us consider that the medium is without sources (charge and current density), so that the fields and pulsation solve the problem (1.52-1.55) with zero right-hand sides, due to the explicit time-dependence of the plane waves. In addition, they have a special form with respect to the space variable $\boldsymbol{x}$, so

one has $\mathbf{curl}\,\boldsymbol{E} = \imath\boldsymbol{k}\times\boldsymbol{E}$ and $\operatorname{div}\boldsymbol{E} = \imath\boldsymbol{k}\cdot\boldsymbol{E}$. The equations become, since ε, μ are constant numbers,

$$\varepsilon\mu\omega\boldsymbol{E}_0 + \boldsymbol{k}\times\boldsymbol{B}_0 = 0\,, \tag{1.67}$$
$$-\omega\boldsymbol{B}_0 + \boldsymbol{k}\times\boldsymbol{E}_0 = 0\,, \tag{1.68}$$
$$\boldsymbol{k}\cdot\boldsymbol{E}_0 = 0\,, \tag{1.69}$$
$$\boldsymbol{k}\cdot\boldsymbol{B}_0 = 0\,. \tag{1.70}$$

One can remove $\boldsymbol{B}_0$ from the first two equations to obtain

$$\boldsymbol{k}\times(\boldsymbol{k}\times\boldsymbol{E}_0) = -\varepsilon\mu\omega^2\boldsymbol{E}_0\,.$$

This equation requires the vector $\boldsymbol{k}\times(\boldsymbol{k}\times\boldsymbol{E}_0)$ to be parallel to $\boldsymbol{E}_0$, which is possible if and only if $\boldsymbol{k}\cdot\boldsymbol{E}_0 = 0$, i.e., Eq. (1.69) precisely. This yields $|\boldsymbol{k}|^2 = \varepsilon\mu\omega^2$, and then $\boldsymbol{k}\times(\boldsymbol{k}\times\boldsymbol{E}_0) = -|\boldsymbol{k}|^2\boldsymbol{E}_0$. Finally, this allows one to characterize a plane wave as a solution to the following system of equations:

$$|\boldsymbol{k}| = \sqrt{\varepsilon\mu}\,\omega\,, \tag{1.71}$$
$$\boldsymbol{k}\cdot\boldsymbol{E}_0 = 0\,, \tag{1.72}$$
$$\boldsymbol{B}_0 = \frac{1}{\omega}\boldsymbol{k}\times\boldsymbol{E}_0\,. \tag{1.73}$$

Expression (1.71), relating $\boldsymbol{k}$ to ω, is called the *dispersion relation* (see, for instance, [152]). Additionally, the relations (1.72-1.73) prove that $\boldsymbol{E}_0$ and $\boldsymbol{B}_0$ are transverse to the propagation direction of the plane waves, and orthogonal to one another.

From (1.66) and (1.71), one infers that $v_p = c$, with $c = 1/\sqrt{\varepsilon\mu}$. Denoting $k = |\boldsymbol{k}|$, one may compute the *group velocity* defined by

$$v_g(k) = \frac{d\omega}{dk}(k),$$

which usually measures the velocity at which energy is conveyed by a wave. In a homogeneous medium (see (1.71)), $k \mapsto \omega(k)$ is linear. Hence, the group velocity is the same for all electromagnetic plane waves, and equal to the phase velocity: $v_g = v_p$. These waves are *non-dispersive*, and in this sense, a homogeneous medium itself is *non-dispersive*.

To conclude this series of elementary computations, we have established that, for any wave vector $\boldsymbol{k} \in \mathbb{R}^3 \setminus \{0\}$, there exists an electromagnetic complex-valued plane wave, which reads as

$$\boldsymbol{E}^c(t,\boldsymbol{x}) = \boldsymbol{E}_0\exp(\imath(\boldsymbol{k}\cdot\boldsymbol{x} - c|\boldsymbol{k}|t))\,,$$
$$\boldsymbol{B}^c(t,\boldsymbol{x}) = \boldsymbol{B}_0\exp(\imath(\boldsymbol{k}\cdot\boldsymbol{x} - c|\boldsymbol{k}|t))\,,$$

with $\boldsymbol{E}_0$ verifying (1.72) and related to $\boldsymbol{B}_0$ as in (1.73).

More generally, the electromagnetic fields in $\mathbb{R}^3$ can be considered as a superposition of plane waves (plus constant fields), so that $\boldsymbol{E}_0$ and $\boldsymbol{B}_0$ depend on the wave vector, and one ultimately has

$$\boldsymbol{E}^c(t,\boldsymbol{x}) = \int_{\boldsymbol{k}\in\mathbb{R}^3} \boldsymbol{E}_0(\boldsymbol{k}) \exp(\imath(\boldsymbol{k}\cdot\boldsymbol{x} - c|\boldsymbol{k}|t))\, d\boldsymbol{k},$$
$$\boldsymbol{B}^c(t,\boldsymbol{x}) = \int_{\boldsymbol{k}\in\mathbb{R}^3} \boldsymbol{B}_0(\boldsymbol{k}) \exp(\imath(\boldsymbol{k}\cdot\boldsymbol{x} - c|\boldsymbol{k}|t))\, d\boldsymbol{k}\,.$$

The physical electromagnetic fields can be expressed in two forms. First, as

$$\boldsymbol{E}(t,\boldsymbol{x}) = \frac{1}{2}\int_{\boldsymbol{k}\in\mathbb{R}^3} \left\{\boldsymbol{E}_0(\boldsymbol{k}) \exp(\imath(\boldsymbol{k}\cdot\boldsymbol{x} - c|\boldsymbol{k}|t)) + \overline{\boldsymbol{E}_0}(\boldsymbol{k}) \exp(-\imath(\boldsymbol{k}\cdot\boldsymbol{x} - c|\boldsymbol{k}|t))\right\}\, d\boldsymbol{k},$$
$$\boldsymbol{B}(t,\boldsymbol{x}) = \frac{1}{2}\int_{\boldsymbol{k}\in\mathbb{R}^3} \left\{\boldsymbol{B}_0(\boldsymbol{k}) \exp(\imath(\boldsymbol{k}\cdot\boldsymbol{x} - c|\boldsymbol{k}|t)) + \overline{\boldsymbol{B}_0}(\boldsymbol{k}) \exp(-\imath(\boldsymbol{k}\cdot\boldsymbol{x} - c|\boldsymbol{k}|t))\right\}\, d\boldsymbol{k}\,.$$

Second (and the expressions are equivalent), as

$$\boldsymbol{E}(t,\boldsymbol{x}) = \frac{1}{2}\int_{\boldsymbol{k}\in\mathbb{R}^3} \left\{\boldsymbol{E}_0(\boldsymbol{k}) \exp(-\imath c|\boldsymbol{k}|t) + \overline{\boldsymbol{E}_0}(-\boldsymbol{k}) \exp(\imath c|\boldsymbol{k}|t)\right\} \exp(\imath\boldsymbol{k}\cdot\boldsymbol{x})\, d\boldsymbol{k},$$
$$\boldsymbol{B}(t,\boldsymbol{x}) = \frac{1}{2}\int_{\boldsymbol{k}\in\mathbb{R}^3} \left\{\boldsymbol{B}_0(\boldsymbol{k}) \exp(-\imath c|\boldsymbol{k}|t) + \overline{\boldsymbol{B}_0}(-\boldsymbol{k}) \exp(\imath c|\boldsymbol{k}|t)\right\} \exp(\imath\boldsymbol{k}\cdot\boldsymbol{x})\, d\boldsymbol{k}\,.$$

Remark 1.2.5 *Everywhere in space, any couple $(\boldsymbol{k},\omega)$ such that $c\,|\boldsymbol{k}| = \omega$ yields a plane wave governed by Maxwell's equations (with all possible choices of propagation directions in $\mathbb{S}^2$). In particular, any strictly positive ω is admissible, which yields all values $\lambda > 0$ (cf. (1.62)). If one thinks in terms of the eigenvalue problem (1.58-1.61), the corresponding "eigenvector" is not measurable in the sense of (1.32), so it is called a generalized eigenvector. Adding the constant vectors (generalized eigenvectors related to $\lambda = 0$), the set of values λ is $\{\lambda \geq 0\}$, which is the continuous spectrum. In a bounded domain, however, the situation is completely different: a quantisation phenomenon occurs, i.e., only certain definite values of ω are possible. What is more, classical eigenvectors exist, and the set of eigenvalues is discrete and countable. Most examples studied in this book will fall into the latter category of a countable spectrum.*

1.2.3 Electromagnetic plane waves inside a conductor

Let us focus on the time-harmonic Maxwell equations inside an inhomogeneous conductor. In this case, it holds that $\boldsymbol{j}(\boldsymbol{x}) = \sigma(\boldsymbol{x})\boldsymbol{e}(\boldsymbol{x})$, in the absence of an externally imposed current. The time-harmonic Maxwell equations (1.52-1.55) become

$$\begin{aligned} \imath\omega\varepsilon_\sigma \boldsymbol{e} + \mathbf{curl}(\mu^{-1}\boldsymbol{b}) &= 0, \\ -\imath\omega\boldsymbol{b} + \mathbf{curl}\,\boldsymbol{e} &= 0, \\ \operatorname{div}\varepsilon_\sigma\boldsymbol{e} &= 0, \\ \operatorname{div}\boldsymbol{b} &= 0, \end{aligned}$$

with the *complex-valued* $\varepsilon_\sigma = \varepsilon + \imath\sigma\omega^{-1}$. From now on, the medium is assumed to be spatially homogeneous. Consider an electromagnetic plane wave as in (1.64-1.65), that is, $\boldsymbol{e}(\boldsymbol{x}) = \boldsymbol{E}_0 \exp(\imath\boldsymbol{k}\cdot\boldsymbol{x})$ and $\boldsymbol{b}(\boldsymbol{x}) = \boldsymbol{B}_0 \exp(\imath\boldsymbol{k}\cdot\boldsymbol{x})$, with $\boldsymbol{k} \in \mathbb{C}^3$ of the form $\boldsymbol{k} = k\,\boldsymbol{d}$, where $\boldsymbol{d}$ is a real unit vector and $k = k_+ + \imath k_- \in \mathbb{C}$. Note that one can write

$$\exp(\imath(\boldsymbol{k}\cdot\boldsymbol{x} - \omega t)) = \exp(-k_-\boldsymbol{d}\cdot\boldsymbol{x})\exp(\imath(k_+\boldsymbol{d}\cdot\boldsymbol{x} - \omega t)),$$

so $\boldsymbol{d}$ can be considered as the actual direction of propagation, if $k_+ > 0$. This is the convention we adopt below.
One reaches Eqs. (1.67-1.70), with ε replaced by ε_σ. Eliminating $\boldsymbol{B}_0$, one finds the relation $\boldsymbol{k}\times(\boldsymbol{k}\times\boldsymbol{E}_0) = -\varepsilon_\sigma\mu\omega^2\boldsymbol{E}_0$. It follows that $k^2 = \varepsilon_\sigma\mu\omega^2$, and one finds that

$$k_\pm = s\sqrt{\varepsilon\mu}\omega\left(\frac{(1+\sigma^2\omega^{-2}\varepsilon^{-2})^{1/2} \pm 1}{2}\right)^{1/2},$$

with $s = \pm 1$. According to the convention we adopted, one necessarily has $s = +1$. In particular, it holds that $k_- > 0$, so one can write

$$\exp(\imath(\boldsymbol{k}\cdot\boldsymbol{x} - \omega t)) = \exp(-k_-\boldsymbol{d}\cdot\boldsymbol{x})\exp(\imath(k_+\boldsymbol{d}\cdot\boldsymbol{x} - \omega t)),$$

with an *attenuation factor* $\exp(-k_-\boldsymbol{d}\cdot\boldsymbol{x})$. The electromagnetic plane wave is absorbed by the conductor as it propagates. In other words, the conductor is a *dissipative medium*. To conclude, note that the notion of skin depth follows from this discussion, if one considers an approximation of the attenuation factor when $\eta = \sigma(\omega\varepsilon)^{-1} \gg 1$. More precisely, the skin depth δ is the distance parallel to $\boldsymbol{d}$ such that the attenuation factor decreases by a factor $\exp(1)$, i.e., $k_-\delta = 1$. Since $\eta \gg 1$,

$$\delta = \frac{1}{k_-} = \frac{1}{\sqrt{\varepsilon\mu}\omega}\left(\frac{(1+\eta^2)^{1/2} - 1}{2}\right)^{-1/2} \approx \frac{1}{\sqrt{\pi\mu}}\,(\sigma\nu)^{-1/2},$$

which is the result stated in §1.1.6.

As ε_σ depends on ω, electromagnetic waves inside a conductor are *dispersive*, in the sense that they do not travel at the same velocity for different ω (see also §1.2.4 next). To characterize their behavior, one can study their *group velocity*, now equal to $v_g(k_+^0) = \omega'(k_+^0)$, which measures the velocity at which energy is transported, for values of k_+ close to k_+^0.

1.2.4 Dispersive media

Applying the (time) Fourier transform to a convolution product results in the product of the (time) Fourier transforms, times 2π. One infers that the constitutive relations (1.13) can be equivalently recast in the ω variable as[9]

$$\begin{cases} \hat{\boldsymbol{D}}(\omega) = (\mathfrak{e} + 2\pi\hat{\mathfrak{e}}_d(\omega))\hat{\boldsymbol{E}}(\omega) + (\mathfrak{k} + 2\pi\hat{\mathfrak{k}}_d(\omega))\hat{\boldsymbol{H}}(\omega) \\ \hat{\boldsymbol{B}}(\omega) = (\mathfrak{c} + 2\pi\hat{\mathfrak{c}}_d(\omega))\hat{\boldsymbol{E}}(\omega) + (\mathfrak{p} + 2\pi\hat{\mathfrak{p}}_d(\omega))\hat{\boldsymbol{H}}(\omega). \end{cases} \tag{1.74}$$

It follows that a medium is non-dispersive as soon as the Fourier transforms of the constitutive parameters are independent of ω. We outline the discussion below on some properties of the constitutive parameters for "physically reasonable" media, cf. [170, §1] for details. Assuming that the causality principle holds, it follows that

$$\hat{\mathfrak{e}}_d(\omega) = (2\pi)^{-1} \int_{s\in\mathbb{R}} \mathfrak{e}_d(s) \exp(\imath\omega s)\, ds = (2\pi)^{-1} \int_0^\infty \mathfrak{e}_d(s) \exp(\imath\omega s)\, ds\,.$$

This expression has two simple, but important, consequences. First, because $\mathfrak{e}_d$ is a real-valued tensor, it holds that $\hat{\mathfrak{e}}_d(-\omega) = \overline{\hat{\mathfrak{e}}_d(\omega)}$ for all $\omega \in \mathbb{R}$. Also, one notices that $\hat{\mathfrak{e}}_d$ has a regular analytic continuation in the upper half-plane $\Im(\omega) > 0$. In addition, assume, for instance, that $\omega \mapsto \hat{\mathfrak{e}}_d(\omega)$ is square integrable over $\mathbb{R}$. Then, one can build dispersion relations, also called the *Kramers-Kronig relations*, that respectively relate the real part $\Re(\hat{\mathfrak{e}}_d(\omega))$ to all imaginary parts $(\Im(\hat{\mathfrak{e}}_d(\theta)))_{\theta>0}$ and the imaginary part $\Im(\hat{\mathfrak{e}}_d(\omega))$ to all real parts $(\Re(\hat{\mathfrak{e}}_d(\theta)))_{\theta>0}$:

$$\Re\big(\hat{\mathfrak{e}}_d(\omega)\big) = \frac{2}{\pi}\,\mathrm{pv}\int_0^\infty \frac{\theta\,\Im\big(\hat{\mathfrak{e}}_d(\theta)\big)}{\theta^2-\omega^2}d\theta,\ \Im\big(\hat{\mathfrak{e}}_d(\omega)\big) = -\frac{2\omega}{\pi}\,\mathrm{pv}\int_0^\infty \frac{\Re\big(\hat{\mathfrak{e}}_d(\theta)\big)}{\theta^2-\omega^2}d\theta,$$

where pv denotes Cauchy's principal value. On the other hand, if $\omega \mapsto \hat{\mathfrak{e}}_d(\omega)$ is square integrable over $\mathbb{R}$ and if one of the two Kramers-Kronig relations holds,[10] one finds by applying the (time) inverse Fourier transform that $\mathfrak{e}_d(s) = 0$ for $s < 0$. Hence, the causality principle holds.

Among dispersive media, one model, which describes the optical (and thermal) properties of some metals, has received renewed attention in recent years. This is the *Lorentz model*, with $\hat{\mathfrak{e}}_L(\omega) = (\hat{\varepsilon}_L + \hat{\varepsilon}_{d,L}(\omega))\mathbb{I}_3$, where $\hat{\varepsilon}_L = \varepsilon_0$ is the optical response and the dispersive response is given by

$$\begin{aligned} \hat{\varepsilon}_{d,L}(\omega) &= -\frac{\varepsilon_0\omega_p^2}{\omega^2-\omega_L^2+\imath\omega\gamma_L} \\ &= \varepsilon_0\omega_p^2\left(-\frac{\omega^2-\omega_L^2}{(\omega^2-\omega_L^2)^2+\omega^2\gamma_L^2} + \imath\frac{\omega\gamma_L}{(\omega^2-\omega_L^2)^2+\omega^2\gamma_L^2}\right). \end{aligned}$$

[9] The fields $\hat{\boldsymbol{P}}(\omega) = 2\pi\hat{\mathfrak{e}}_d(\omega)\hat{\boldsymbol{E}}(\omega)$ and $\hat{\boldsymbol{M}}(\omega) = 2\pi\hat{\mathfrak{p}}_d(\omega)\hat{\boldsymbol{H}}(\omega)$ are respectively called electric and magnetic *polarizations*.

[10] Other conditions on $\hat{\mathfrak{e}}_d$ lead to the same conclusion. For instance, if $\omega \mapsto \hat{\mathfrak{e}}_d(\omega)$ is a real-valued, even function of ω that can be expressed as a rational fraction, with decaying condition $\hat{\mathfrak{e}}_d(\omega) = O(\omega^{-2})$ for large $|\omega|$.

Above, ω_p is the plasma frequency, $\gamma_L \geq 0$ is a damping coefficient that accounts for the dissipation, and $\omega_L \neq 0$ is the resonance pulsation. The case $\omega_L = 0$ is usually called the Drude model. One may also add a parameter that acts on the optical response: $\hat{\varepsilon}_L$ is modified to $\hat{\varepsilon}_L = \varepsilon_\infty \varepsilon_0$ with $\varepsilon_\infty \geq 1$. Note that in the absence of damping, there exist pulsation ranges in which $\hat{\varepsilon}_L + \hat{\varepsilon}_d(\omega) < 0$. One may generalize the Lorentz model by defining $\hat{\mathbb{c}}_{d,G}(\omega) = (\hat{\varepsilon}_G + \sum_{L=1,N_G} f_L \hat{\varepsilon}_{d,L}(\omega))\mathbb{I}_3$ with different values of the resonance pulsation ω_L for $1 \leq L \leq N_G$, and where f_L are strength factors. By construction, the one-pulsation Lorentz model with $\gamma_L > 0$ is square integrable, and it fulfills the Kramers-Kronig relations. As a consequence, the causality principle holds for this model. Thanks to the results of footnote [10], the causality principle is also verified in the absence of damping.
Finally, the real and imaginary parts of $\hat{\varepsilon}_d$ have been measured experimentally for a number of metals. In general, $\hat{\varepsilon}_d$ is *approximately real*, i.e., $|\Re(\hat{\varepsilon}_d(\omega))|$ is usually much larger than $|\Im(\hat{\varepsilon}_d(\omega))|$. In given pulsation ranges, these experiments can be matched by either the one-resonance Lorentz model, or the generalized model, with appropriately chosen coefficients.

As seen previously, an inhomogeneous conductor is dispersive. Indeed, in Ampère's law (1.40), $\partial_t \boldsymbol{D}$ is replaced by $\varepsilon \partial_t \boldsymbol{E} + \sigma \boldsymbol{E}$. So, after the time Fourier transform, one finds that $-\imath\omega \hat{\boldsymbol{D}}(\omega) = -\imath\omega\varepsilon \hat{\boldsymbol{E}}(\omega) + \sigma \hat{\boldsymbol{E}}(\omega)$. In (1.74), $\hat{\varepsilon}_{d,cond}$ is equal to

$$\hat{\varepsilon}_{d,cond}(\omega) = \frac{\imath\sigma}{2\pi\omega}\,.$$

As expected, $\hat{\varepsilon}_{cond} = \varepsilon + 2\pi\hat{\varepsilon}_{d,cond}$ is equal to ε_σ as defined in §1.2.3.

1.3 Coupling with other models

Maxwell's equations are related to electrically charged particles. For instance, Gauss's law (1.3) can be viewed as a (proportionality) relation between the flux of the electric displacement $\boldsymbol{D}$ through a surface and the amount of charges contained inside. In the same way, Coulomb's law allows one to express the electromagnetic interaction force between particles, from which one can deduce the static equations for the electric field $\boldsymbol{E}$. In a more general way, the motion of charged particles generates electromagnetic fields. Conversely, for a population of charged particles with a mass m and a charge q (for simplicity reasons, we consider particles that belong to a single species), the main force field is the electromagnetic force field, called the *Lorentz force*. This force describes the way in which the electromagnetic fields $\boldsymbol{E}(t,\boldsymbol{x})$ and $\boldsymbol{B}(t,\boldsymbol{x})$ act on a particle with a velocity $\boldsymbol{v}(t)$:

$$\boldsymbol{F} = q\,(\boldsymbol{E} + \boldsymbol{v} \times \boldsymbol{B})\,. \tag{1.75}$$

Hence, there exists a strong correlation between Maxwell's equations and models that describe the motion of (charged) particles. This correlation is at the

core of most coupled models, where Maxwell's equations appear jointly with other sets of equations, which usually govern the motion of charged particles.

To describe the motion of a set of N particles, one can consider the molecular level, namely by looking simultaneously at the positions $(\boldsymbol{x}_i)_{1\le i\le N}$ and the velocities $(\boldsymbol{v}_i)_{1\le i\le N}$ of these particles. Assuming that the particles follow Newton's law, the equations of motion are written as

$$\frac{d\boldsymbol{x}_i}{dt} = \boldsymbol{v}_i, \quad m\frac{d\boldsymbol{v}_i}{dt} = \boldsymbol{F} + \boldsymbol{F}_{int}, \quad 1 \le i \le N. \tag{1.76}$$

Above, $\boldsymbol{F}$ is the external force acting on the particles and $\boldsymbol{F}_{int}$ denotes the interaction force that occurs between the particles. These equations are complemented with initial conditions, for instance, at time $t = 0$,

$$\boldsymbol{x}_i(0) = \boldsymbol{x}_i^0, \quad \boldsymbol{v}_i(0) = \boldsymbol{v}_i^0, \quad 1 \le i \le N. \tag{1.77}$$

Note that the system (1.76-1.77) is uniquely solvable, in the sense that it allows one to determine the motion of the N particles. This corresponds to a *mechanical description* of the set of particles.

Another approach – the *statistical description* – relies on

$$\pi_N(t, \boldsymbol{X}, \boldsymbol{V}), \quad \text{where } \boldsymbol{X} = (\boldsymbol{x}_1, \cdots, \boldsymbol{x}_N) \in \mathbb{R}^{3N}, \ \boldsymbol{V} = (\boldsymbol{v}_1, \cdots, \boldsymbol{v}_N) \in \mathbb{R}^{3N}.$$

π_N is the N-particle distribution function: $\pi_N(t, \boldsymbol{X}, \boldsymbol{V})\, d\boldsymbol{X} d\boldsymbol{V}$ denotes the probability that the N particles are respectively located at positions $(\boldsymbol{x}_1, \cdots, \boldsymbol{x}_N)$, with velocities $(\boldsymbol{v}_1, \cdots, \boldsymbol{v}_N)$, at time t. Then, if one considers the actual trajectory of the particles in the $6N$-dimensional space $t \mapsto (\boldsymbol{X}(t), \boldsymbol{V}(t))$, it holds that

$$\frac{d}{dt}\pi_N(t, \boldsymbol{X}(t), \boldsymbol{V}(t)) = 0, \qquad \pi_N(\cdot, \cdot, 0) = \pi_N^0(\cdot, \cdot). \tag{1.78}$$

Indeed, along the trajectory actually followed by the particles, no particle is created, and no particle vanishes.
With the help of the chain rule, one can rewrite the previous equation as

$$\begin{aligned} &\left(\frac{\partial}{\partial t} + \frac{d\boldsymbol{X}}{dt} \cdot \frac{\partial}{\partial \boldsymbol{X}} + \frac{d\boldsymbol{V}}{dt} \cdot \frac{\partial}{\partial \boldsymbol{V}}\right) \pi_N = 0, \text{ or} \\ &\left(\frac{\partial}{\partial t} + \sum_{k=1}^{N} \frac{d\boldsymbol{x}_k}{dt} \cdot \nabla_{\boldsymbol{x}_k} + \sum_{k=1}^{N} \frac{d\boldsymbol{v}_k}{dt} \cdot \nabla_{\boldsymbol{v}_k}\right) \pi_N = 0. \end{aligned} \tag{1.79}$$

(This is the *Liouville equation.*)
One can prove that the mechanical and statistical descriptions are equivalent, via the method of characteristics (see, for instance, [99]).

The charge and current densities induced by the motion of these particles can be written as

$$\varrho(t,\boldsymbol{x}) = \sum_{i=1}^{N} q\ \delta_{\boldsymbol{x}_i(t)}(\boldsymbol{x}) \quad \text{and} \quad \boldsymbol{J}(t,\boldsymbol{x}) = \sum_{i=1}^{N} q\ \delta_{\boldsymbol{x}_i(t)}(\boldsymbol{x}) \otimes \boldsymbol{v}_i(t), \tag{1.80}$$

where $\delta_{\boldsymbol{x}_i(t)}$ is the Dirac mass in $\boldsymbol{x}_i(t)$.

In the following, we will consider more tractable approaches, namely the *kinetic model* and the *fluid model*. Note that the kinetic description can be viewed as an intermediate stage between the molecular and the fluid descriptions: it contains information on the distribution of the particle velocities, which is lost in a fluid description. Indeed, the fluid model consists in looking at macroscopic averages of the quantities associated with the particles. The next two subsections are devoted to the models resulting from the coupling of Maxwell's equations with either the kinetic or the fluid approach.

1.3.1 Vlasov–Maxwell model

In this kinetic approach, we consider a population of charged particles, subject to a given external force field $\boldsymbol{F}(t,\boldsymbol{x},\boldsymbol{v})$ such that[11] $\operatorname{div}_{\boldsymbol{v}} \boldsymbol{F} = 0$. Each particle is characterized by its position $\boldsymbol{x}$ and its velocity $\boldsymbol{v}$ in the so-called *phase space* $(\boldsymbol{x},\boldsymbol{v}) \in \mathbb{R}^3_{\boldsymbol{x}} \times \mathbb{R}^3_{\boldsymbol{v}}$. Instead of considering each particle individually, we introduce the distribution function $f(t,\boldsymbol{x},\boldsymbol{v})$, which can be defined as the average number of particles in a volume $d\boldsymbol{x}d\boldsymbol{v}$ of the phase space. So, we have

$$f(t,\boldsymbol{x},\boldsymbol{v})\, d\boldsymbol{x}d\boldsymbol{v} = \text{number of particles at time } t \text{ in a volume } d\boldsymbol{x}d\boldsymbol{v} \text{ centred at } (\boldsymbol{x},\boldsymbol{v}) \text{ in the phase space.}$$

How can this approach be related to the mechanical description (1.76-1.77), or to the statistical description (1.78-1.79)? Simply, if we denote by $\boldsymbol{X}_-$ and $\boldsymbol{V}_-$ the variables $(\boldsymbol{x}_2,\cdots,\boldsymbol{x}_N)$ and $(\boldsymbol{v}_2,\cdots,\boldsymbol{v}_N)$, we remark that

$$(t,\boldsymbol{x},\boldsymbol{v}) \mapsto N \int_{\boldsymbol{X}_-} \int_{\boldsymbol{V}_-} \pi_N(t,\boldsymbol{x},\boldsymbol{X}_-,\boldsymbol{v},\boldsymbol{V}_-)\, d\boldsymbol{X}_- d\boldsymbol{V}_-$$

is an admissible distribution function. Let it be called f.
Now, we recall that Eq. (1.76) writes

$$\frac{d\boldsymbol{x}_k}{dt} = \boldsymbol{v}_k, \quad m\frac{d\boldsymbol{v}_k}{dt} = \boldsymbol{F}(t,\boldsymbol{x}_k,\boldsymbol{v}_k) + \boldsymbol{F}_{int}(t,(\boldsymbol{x}_\ell)_\ell), \quad 1 \le k \le N.$$

Here, we assume that $\boldsymbol{F}_{int}$ does not depend on $(\boldsymbol{v}_k)_k$. More generally, it would be enough that $\operatorname{div}_{\boldsymbol{v}_k} \boldsymbol{F}_{int} = 0$, for all k.

[11] In particular, this is the case for the Lorentz force (1.75). As a matter of fact, $\operatorname{div}_{\boldsymbol{v}} \boldsymbol{F}(t,\boldsymbol{x},\boldsymbol{v}) = q\,(\operatorname{div}_{\boldsymbol{v}} \boldsymbol{E} + \operatorname{div}_{\boldsymbol{v}}(\boldsymbol{v}\times\boldsymbol{B})) = 0$, since the electromagnetic fields are independent of $\boldsymbol{v}$ in the phase space.

To determine the equations that govern f, we integrate Eq. (1.79) with respect to $\boldsymbol{X}_-, \boldsymbol{V}_-$. This leads to

$$\frac{\partial f}{\partial t} + \boldsymbol{v} \cdot \nabla_{\boldsymbol{x}} f + \int \int \frac{d\boldsymbol{v}_1}{dt} \cdot \nabla_{\boldsymbol{v}_1} \pi_N \, d\boldsymbol{X}_- d\boldsymbol{V}_-$$
$$+ \sum_{k=2}^{N} \int \int \boldsymbol{v}_k \cdot \nabla_{\boldsymbol{x}_k} \pi_N \, d\boldsymbol{X}_- d\boldsymbol{V}_- + \sum_{k=2}^{N} \int \int \frac{d\boldsymbol{v}_k}{dt} \cdot \nabla_{\boldsymbol{v}_k} \pi_N \, d\boldsymbol{X}_- d\boldsymbol{V}_- = 0.$$

We note that the first two terms are directly expressed in terms of f, since the differentiation is performed in t, or in $\boldsymbol{x} = \boldsymbol{x}_1$, both of which are absent in $(\boldsymbol{X}_-, \boldsymbol{V}_-)$. Let us perform the integration by parts of the penultimate integrals with respect to the variable $\boldsymbol{x}_k$ (the same index as in the summation). If there is no particle flux at infinity, when $|\boldsymbol{x}_k| \to +\infty$, we find that, since it holds that $\mathrm{div}_{\boldsymbol{x}_k} \boldsymbol{v}_k = 0$ ($\boldsymbol{v}_k$ is another variable), one has

$$\int \int \boldsymbol{v}_k \cdot \nabla_{\boldsymbol{x}_k} \pi_N \, d\boldsymbol{X}_- d\boldsymbol{V}_- = - \int \int (\mathrm{div}_{\boldsymbol{x}_k} \boldsymbol{v}_k) \pi_N \, d\boldsymbol{X}_- d\boldsymbol{V}_- = 0.$$

Similarly, integrating the last integrals with respect to the variable $\boldsymbol{v}_k$, we find that they vanish too ($\mathrm{div}_{\boldsymbol{v}_k} \boldsymbol{v}_k = 3$ is independent of t). Next, we have to deal with the middle term, which can be split as

$$\int \int \frac{d\boldsymbol{v}_1}{dt} \cdot \nabla_{\boldsymbol{v}_1} \pi_N \, d\boldsymbol{X}_- d\boldsymbol{V}_- = \frac{1}{m} \boldsymbol{F} \cdot \nabla_{\boldsymbol{v}} f + \int \int \frac{1}{m} \boldsymbol{F}_{int} \cdot \nabla_{\boldsymbol{v}_1} \pi_N \, d\boldsymbol{X}_- d\boldsymbol{V}_-.$$

Then, summing up, we reach the relation

$$\frac{\partial f}{\partial t} + \boldsymbol{v} \cdot \nabla_{\boldsymbol{x}} f + \frac{1}{m} \boldsymbol{F} \cdot \nabla_{\boldsymbol{v}} f = - \int \int \frac{1}{m} \boldsymbol{F}_{int} \cdot \nabla_{\boldsymbol{v}} \pi_N \, d\boldsymbol{X}_- d\boldsymbol{V}_-.$$

The right-hand side is called the *collision integral*. To model collisions, one usually rewrites this right-hand side as a collision kernel $Q(f)$, which is the rate of change of f per unit time. There are different expressions of $Q(f)$ (linear, quadratic, etc.) depending on the physics involved, which can be very intricate. This yields the relation

$$\frac{\partial f}{\partial t} + \boldsymbol{v} \cdot \nabla_{\boldsymbol{x}} f + \frac{1}{m} \boldsymbol{F} \cdot \nabla_{\boldsymbol{v}} f = Q(f).$$

Finally, substituting the expression of the Lorentz force (1.75) in this equation, we obtain that the distribution function $f(t, \boldsymbol{x}, \boldsymbol{v})$ is governed by the following transport equation, called the *Boltzmann equation*:

$$\frac{\partial f}{\partial t} + \boldsymbol{v} \cdot \nabla_{\boldsymbol{x}} f + \frac{q}{m} (\boldsymbol{E} + \boldsymbol{v} \times \boldsymbol{B}) \cdot \nabla_{\boldsymbol{v}} f = Q(f). \tag{1.81}$$

In the kinetic description, the expressions (1.80) of the charge and the current densities are respectively given by

$$\varrho(t,\boldsymbol{x}) = q\int_{\mathbb{R}^3_v} f(t,\boldsymbol{x},\boldsymbol{v})\,d\boldsymbol{v}, \tag{1.82}$$

$$\boldsymbol{J}(t,\boldsymbol{x}) = q\int_{\mathbb{R}^3_v} f(t,\boldsymbol{x},\boldsymbol{v})\,\boldsymbol{v}\,d\boldsymbol{v}. \tag{1.83}$$

When there are several species of particle (respectively, with masses $(m_\alpha)_\alpha$ and charges $(q_\alpha)_\alpha$), one introduces one distribution function per species $(f_\alpha)_\alpha$. Each function is governed by Eq. (1.81). Then, the contributions of all species add up to define ϱ and $\boldsymbol{J}$,

$$\varrho(t,\boldsymbol{x}) = \sum_\alpha q_\alpha \int_{\mathbb{R}^3_v} f_\alpha(t,\boldsymbol{x},\boldsymbol{v})\,d\boldsymbol{v}, \tag{1.84}$$

$$\boldsymbol{J}(t,\boldsymbol{x}) = \sum_\alpha q_\alpha \int_{\mathbb{R}^3_v} f_\alpha(t,\boldsymbol{x},\boldsymbol{v})\,\boldsymbol{v}\,d\boldsymbol{v}. \tag{1.85}$$

When several species coexist, the collision integrals include intra-species interactions and inter-species interactions. The inter-species interactions here model transferred quantities (such as the momentum or the energy) between different species. If the collision kernels $(Q_\alpha(f))_\alpha$ model elastic collisions between neighboring particles, then conservation laws apply. One finds that

$$\int_{\mathbb{R}^3_v} Q_\alpha(f)\,d\boldsymbol{v} = 0,\ \forall\alpha \text{ and } \sum_\alpha \int_{\mathbb{R}^3_v} Q_\alpha(f)\boldsymbol{v}\,d\boldsymbol{v} = 0. \tag{1.86}$$

To simplify[12] the presentation, we neglect collisions, so the distribution function is governed by the so-called *Vlasov equation*

$$\frac{\partial f}{\partial t} + \boldsymbol{v}\cdot\nabla_{\boldsymbol{x}} f + \frac{q}{m}(\boldsymbol{E}+\boldsymbol{v}\times\boldsymbol{B})\cdot\nabla_{\boldsymbol{v}} f = 0, \tag{1.87}$$

when only a single species of particles is concerned. To be able to couple the Vlasov equation with Maxwell's ones, one has to check that ϱ and $\boldsymbol{J}$, defined as above, satisfy the differential charge conservation equation (1.10). First, one has $\operatorname{div}_{\boldsymbol{x}}\boldsymbol{v} = 0$ in the phase space, so that $\boldsymbol{v}\cdot\nabla_{\boldsymbol{x}} f = \operatorname{div}_{\boldsymbol{x}}(f\boldsymbol{v})$. In the same way, one has $\boldsymbol{F}\cdot\nabla_{\boldsymbol{v}} f = \operatorname{div}_{\boldsymbol{v}}(f\boldsymbol{F})$. So, the integration of q times Eq. (1.87) in $\boldsymbol{v}$ over $\mathbb{R}^3_v$ yields

$$\begin{aligned} 0 &= q\frac{\partial}{\partial t}\int_{\mathbb{R}^3_v} f\,d\boldsymbol{v} + q\int_{\mathbb{R}^3_v}\operatorname{div}_{\boldsymbol{x}}(f\boldsymbol{v})\,d\boldsymbol{v} + \frac{q}{m}\int_{\mathbb{R}^3_v}\operatorname{div}_{\boldsymbol{v}}(f\boldsymbol{F})\,d\boldsymbol{v} \\ &= \frac{\partial\varrho}{\partial t} + \operatorname{div}\boldsymbol{J} + \frac{q}{m}\int_{\mathbb{R}^3_v}\operatorname{div}_{\boldsymbol{v}}(f\boldsymbol{F})\,d\boldsymbol{v}. \end{aligned}$$

[12] Note, however, that in the more general case of a kinetic description given by Eq. (1.81) for several species, one can still prove that ϱ and $\boldsymbol{J}$ defined by Eqs. (1.84-1.85) satisfy the differential charge conservation equation (1.10). This is a straightforward consequence of Eq. (1.86).

Assuming that $f|\boldsymbol{F}|$ goes to zero sufficiently rapidly when $|\boldsymbol{v}|$ goes to infinity, we obtain, by integration by parts, that the last term vanishes. Indeed,

$$\int_{\mathbb{R}^3_v} \mathrm{div}_{\boldsymbol{v}}(f\boldsymbol{F})\, d\boldsymbol{v} = \lim_{R\to+\infty} \int_{B_v(0,R)} \mathrm{div}_{\boldsymbol{v}}(f\boldsymbol{F})\, d\boldsymbol{v} = \lim_{R\to+\infty} \int_{\partial B_v(0,R)} f(\boldsymbol{F}\cdot\boldsymbol{n}_v)\, d\boldsymbol{s} = 0.$$

So, we conclude that ϱ and $\boldsymbol{J}$ given by Eqs. (1.82-1.83) satisfy the differential charge conservation equation as expected.

The relations (1.22-1.25) and (1.82-1.87) clearly express the coupling of Maxwell's and Vlasov's equations, since $\varrho(t,\boldsymbol{x})$ and $\boldsymbol{J}(t,\boldsymbol{x})$ are the right-hand sides[13] of Maxwell's equations. Moreover, the electromagnetic fields $\boldsymbol{E}$ and $\boldsymbol{B}$ play a crucial role in the force $\boldsymbol{F}$ acting on the particles, cf. Eq. (1.75). Hence, even if Vlasov's equation and Maxwell's equations are linear, their coupling yields a problem that is globally quadratic. Indeed, the term $\frac{q}{m}(\boldsymbol{E}+\boldsymbol{v}\times\boldsymbol{B})\cdot\nabla_{\boldsymbol{v}} f$ is a quadratic term in f, since $\boldsymbol{E}$ and $\boldsymbol{B}$ depend linearly[13] on f through ϱ and $\boldsymbol{J}$. Thus, the Vlasov–Maxwell model is a non-linear, strongly coupled problem to solve. See Chapter 10 for mathematical studies on this topic.

For the sake of completeness, we conclude this section with a review of several variants of the Vlasov–Maxwell model, which are used in certain applications according to the relative importance of electromagnetic phenomena. For instance, when rapid electromagnetic phenomena occur, it is more consistent to assume *a priori* that particles obey the relativistic laws of motion. In this framework, phase space is described in terms of positions and *momenta* $(\boldsymbol{x},\boldsymbol{p}) \in \mathbb{R}^3_{\boldsymbol{x}} \times \mathbb{R}^3_{\boldsymbol{p}}$ rather than velocities. The distribution function is written as $f(t,\boldsymbol{x},\boldsymbol{p})$; and velocity becomes a function of momentum:

$$\boldsymbol{v}(\boldsymbol{p}) = \frac{\boldsymbol{p}}{m\sqrt{1+\left(\dfrac{|\boldsymbol{p}|}{m\,c}\right)^2}}.$$

The distribution function is governed by a modified version of (1.87), namely

$$\frac{\partial f}{\partial t} + \boldsymbol{v}(\boldsymbol{p})\cdot\nabla_{\boldsymbol{x}} f + q\,(\boldsymbol{E}+\boldsymbol{v}(\boldsymbol{p})\times\boldsymbol{B})\cdot\nabla_{\boldsymbol{p}} f = 0.$$

The charge and current densities are now defined as

$$\varrho(t,\boldsymbol{x}) = q\int_{\mathbb{R}^3_p} f(t,\boldsymbol{x},\boldsymbol{p})\, d\boldsymbol{p}\,, \qquad \boldsymbol{J}(t,\boldsymbol{x}) = q\int_{\mathbb{R}^3_p} f(t,\boldsymbol{x},\boldsymbol{p})\,\boldsymbol{v}(\boldsymbol{p})\, d\boldsymbol{p}.$$

These satisfy the differential charge conservation equation (1.10).

[13] It can happen that, in Maxwell's equations, parts of ϱ and $\boldsymbol{J}$ are due to external charge and current sources. In this case, $\boldsymbol{E}$ and $\boldsymbol{B}$ depend in an affine way on f.

1.3.2 Magnetohydrodynamics

Magnetohydrodynamics (*MHD*) is the study of the flow of a conducting fluid under the action of applied electromagnetic fields, e.g., a *plasma*. Usually, one considers the plasma as a solution of electrons and ions (a compressible, conducting, two-fluid). Roughly speaking, it consists in coupling the classical hydrodynamical equations for the fluid with an approximation of Maxwell's equations, in which the displacement current $\partial_t \boldsymbol{D}$ is neglected.

In a first step, we recall how one can build a fluid model from the Vlasov equation (1.87). Then, we derive usable expressions for the magnetic induction. Finally, the hydrodynamical equations are coupled to Maxwell's, to finally yield the magnetohydrodynamics model.

As recalled in the introduction to this section, hydrodynamical models are based on a set of conservation equations derived from the Vlasov equation. A simple way to derive these equations is to take the moments of the Vlasov equation. Indeed, fluid descriptions consist in looking at macroscopic averages (with respect to the velocities) of the particle quantities over volumes that are large enough to cancel the statistical fluctuations, but that are small compared to the scales of interest. Hence, fluid unknowns are moments of the distribution function f, such as the particle density $n(t,\boldsymbol{x})$, the mass density $\rho(t,\boldsymbol{x})$, the mean velocity $\boldsymbol{u}(t,\boldsymbol{x})$, the mean energy $W(t,\boldsymbol{x})$ or the 3×3 pressure tensor $\mathbb{P}(t,\boldsymbol{x})$. The first four can be respectively defined as

$$
\begin{aligned}
&n(t,\boldsymbol{x}) = \int_{\mathbb{R}^3_v} f\, d\boldsymbol{v}, \quad \rho(t,\boldsymbol{x}) = m\, n(t,\boldsymbol{x}),\\
&n\,\boldsymbol{u}(t,\boldsymbol{x}) = \int_{\mathbb{R}^3_v} f\,\boldsymbol{v}\, d\boldsymbol{v},\\
&n\,W(t,\boldsymbol{x}) = \frac{m}{2}\int_{\mathbb{R}^3_v} f\,|\boldsymbol{v}|^2\, d\boldsymbol{v}.
\end{aligned}
$$

For the sake of completeness, we have included the moment of order 2 that corresponds to the mean energy. Note that the preceeding equations, together with Eqs. (1.82-1.83), immediately yield

$$
\varrho(t,\boldsymbol{x}) = q\, n(t,\boldsymbol{x}), \quad \boldsymbol{J}(t,\boldsymbol{x}) = q\, n(t,\boldsymbol{x})\boldsymbol{u}(t,\boldsymbol{x}).
$$

Before proceeding, we introduce a variable that allows us to describe the random motion of the fluid:

$$
\boldsymbol{w}(t,\boldsymbol{x},\boldsymbol{v}) = \boldsymbol{v} - \boldsymbol{u}(t,\boldsymbol{x}) \quad \left(\text{so that } \int_{\mathbb{R}^3_v} f(t,\boldsymbol{x},\boldsymbol{v})\boldsymbol{w}\, d\boldsymbol{v} = 0\right).
$$

Then, the pressure tensor $\mathbb{P}(t,\boldsymbol{x})$ is defined as

$$\mathbb{P}(t,\boldsymbol{x}) = m\int_{\mathbb{R}^3_v} f\boldsymbol{w}\otimes\boldsymbol{w}\,d\boldsymbol{v}.$$

(Above, $\boldsymbol{w}\otimes\boldsymbol{w}$ is a symmetric tensor of order 3.)
We split this tensor as

$$\mathbb{P} = p\mathbb{I}_3 + \mathbb{Q}.$$

The field p is the scalar pressure of the fluid. From the above, one easily infers the relation $2nW = mn|\boldsymbol{u}|^2 + 3p$, which corresponds to a splitting of the energy (kinetic and internal). Usually, ρ, $\boldsymbol{u}$ and p are called the *hydrodynamical variables*.

To obtain the evolution equations, we multiply Eq. (1.87) by a test function $\phi(\boldsymbol{v})$ and integrate with respect to $\boldsymbol{v}$ to get

$$\frac{\partial}{\partial t}\int_{\mathbb{R}^3_v} f\,\phi\,d\boldsymbol{v} + \operatorname{div}\int_{\mathbb{R}^3_v} f\,\boldsymbol{v}\phi\,d\boldsymbol{v} + \frac{1}{m}\int_{\mathbb{R}^3_v}\operatorname{div}_{\boldsymbol{v}}(f\boldsymbol{F})\,\phi\,d\boldsymbol{v} = 0\,.$$

Using an integration-by-parts formula (for the last term), and assuming that $f\phi|\boldsymbol{F}|$ goes to zero sufficiently rapidly at infinity, we find

$$\frac{\partial}{\partial t}\int_{\mathbb{R}^3_v} f\,\phi\,d\boldsymbol{v} + \operatorname{div}\int_{\mathbb{R}^3_v} f\,\boldsymbol{v}\phi\,d\boldsymbol{v} - \frac{1}{m}\int_{\mathbb{R}^3_v} f\,\boldsymbol{F}\cdot\nabla_{\boldsymbol{v}}\phi\,d\boldsymbol{v} = 0\,.$$

Now, choosing $\phi(\boldsymbol{v})$ respectively equal to 1, $(v_k)_{k=1,2,3}$ and $|\boldsymbol{v}|^2$, in other words, by taking moments of order 0, 1 and 2, we obtain a sequence of hydrodynamical evolution equations.
First, taking $\phi(\boldsymbol{v}) = 1$ leads to the integral equation

$$\frac{\partial}{\partial t}\int_{\mathbb{R}^3_v} f\,d\boldsymbol{v} + \operatorname{div}\int_{\mathbb{R}^3_v} f\,\boldsymbol{v}\,d\boldsymbol{v} = 0\,,$$

or, with the above definitions of the mass density and mean velocity,

$$\frac{\partial\rho}{\partial t} + \operatorname{div}(\rho\,\boldsymbol{u}) = 0\,. \tag{1.88}$$

To write simple expressions for the moments of order 1 and 2, let us consider the special case of a laminar (or monokinetic) beam that is a gas in which all the particles move at the same velocity $\boldsymbol{u}(t,\boldsymbol{x})$. In this case, the distribution function becomes simply

$$f(t,\boldsymbol{x},\boldsymbol{v}) = n(t,\boldsymbol{x})\delta_{\boldsymbol{u}(t,\boldsymbol{x})}(\boldsymbol{v}).$$

As a consequence, for the moment of order 1, we find the equivalent scalar or vector formulas

$$\begin{aligned}&\frac{\partial}{\partial t}(\rho\,u_k) + \operatorname{div}(\rho\,u_k\,\boldsymbol{u}) = n\,F_k\,,\ 1\le k\le 3,\ \text{or}\\ &\frac{\partial}{\partial t}(\rho\,\boldsymbol{u}) + \mathbf{div}(\rho\,\boldsymbol{u}\otimes\boldsymbol{u}) = n\,\boldsymbol{F}.\end{aligned} \tag{1.89}$$

(The definition of the vector operator **div** is clear from the equivalence between the scalar and vector formulas.)
For the moment of order 2, we note that in this special case of a laminar beam, one has $\mathbb{P} = 0$. The fluid is without pressure (in particular, $p = 0$). Eqs. (1.88-1.89) are, respectively, the mass and momentum conservation equations for a fluid without pressure.

On the other hand, what happens when such a construction is used to establish fluid equations in general? For instance, for a simple fluid with pressure, or for a fluid including several species of particle. If there are two or more species (labeled by the index α), then one builds one Eq. (1.88) and one Eq. (1.89) per species. Eq. (1.88) remains unchanged. For the moments of order 1, Eq. (1.89) retains the same structure, with the following modifications (on the vector formula):

- The pressure tensor appears on the left-hand side. More precisely, the second term is changed to $\mathbf{div}(\rho\,\boldsymbol{u}\otimes\boldsymbol{u}+\mathbb{P}) = \mathbf{div}(\rho\,\boldsymbol{u}\otimes\boldsymbol{u})+\mathbf{grad}\,p+\mathbf{div}\mathbb{Q}$.
- For a fluid including several species of particles, a term is added on the right-hand side, to take into account the transferred mean momentum $\boldsymbol{Tr}_\alpha$ between different species.

To summarize, one obtains the system of equations

$$\frac{\partial \rho_\alpha}{\partial t} + \mathrm{div}(\rho_\alpha\,\boldsymbol{u}_\alpha) = 0\,,\ \forall\alpha \tag{1.90}$$

$$\frac{\partial}{\partial t}(\rho_\alpha\,\boldsymbol{u}_\alpha) + \mathbf{div}(\rho_\alpha\,\boldsymbol{u}_\alpha\otimes\boldsymbol{u}_\alpha) + \mathbf{grad}\,p_\alpha + \mathbf{div}\mathbb{Q}_\alpha = n_\alpha\,\boldsymbol{F} + \boldsymbol{Tr}_\alpha,\ \forall\alpha. \tag{1.91}$$

According to Eq. (1.86), it holds that $\sum_\alpha \boldsymbol{Tr}_\alpha = 0$.

Furthermore, the evolution of the mean energy (moment of order 2) is governed by an equation that involves $\mathbb{Q}_\alpha$, the flux of kinetic energy $\boldsymbol{K}_\alpha$, which is a moment of order 3, and finally, the heat H_α, generated by the collisions between particles of different species (on the right-hand side). So, one needs to choose $\phi(\boldsymbol{v})$ of degree 3 to derive the equation governing the flux of kinetic energy $\boldsymbol{K}_\alpha$. But this would yield a term of order 4, and so on... In other words, one gets a series of equations that is exact, but not closed!
To avoid this problem, one has to add a "closure relation" to the system of equations at some point. For instance, one chooses to keep the hydrodynamical variables $(\rho_\alpha)_\alpha$, $(\boldsymbol{u}_\alpha)_\alpha$, $(p_\alpha)_\alpha$, whereas the other terms $\mathbb{Q}_\alpha$, $\boldsymbol{Tr}_\alpha$, $\boldsymbol{K}_\alpha$ and H_α are approximated or, in other words, expressed as functions of the hydrodynamical variables. To that aim, one usually assumes (see [152, 156]) that the distribution function f_α is close to a Maxwellian distribution.[14] In this situation, one can determine the higher-order terms approximately, and after some

[14] Id est, consider $f_\alpha(\boldsymbol{v}) \approx A_\alpha \exp(-B_\alpha|\boldsymbol{v}-\boldsymbol{u}_\alpha|^2)$, with $A_\alpha, B_\alpha > 0$.

simplifications, one finally derives a modified momentum conservation equation together with a "closure relation", that involves only $(\rho_\alpha)_\alpha$, $(\boldsymbol{u}_\alpha)_\alpha$, $(p_\alpha)_\alpha$.

Let us follow Lifschitz [156], to see how one can write a closed system in the particular case of a plasma. More precisely, we consider a two-fluid, made of electrons ($q_e = -e$) and a single species of ions, so the hydrodynamical variables are $(\rho_\alpha)_{\alpha=e,i}$, $(\boldsymbol{u}_\alpha)_{\alpha=e,i}$, $(p_\alpha)_{\alpha=e,i}$. The aim is to model slow, large-scale plasma evolution. The assumptions originating from the physics involved can be listed as follows:

- The plasma is electrically neutral: $q_e n_e + q_i n_i = 0$;
- The pressure is scalar: $\mathbb{Q}_e = \mathbb{Q}_i = 0$;
- The electron inertia can be neglected: $\partial_t(\rho_e\, \boldsymbol{u}_e) + \mathbf{div}(\rho_e\, \boldsymbol{u}_e \otimes \boldsymbol{u}_e) = 0$.

First, we remark that since $q_e n_e + q_i n_i = 0$, ρ_e is proportional to ρ_i. Eq. (1.90) writes (for $\alpha = i$)

$$\frac{\partial \rho_i}{\partial t} + \mathrm{div}(\rho_i\, \boldsymbol{u}_i) = 0\,.$$

Then, Eq. (1.91) writes (for $\alpha = i, e$)

$$\frac{\partial}{\partial t}(\rho_i\, \boldsymbol{u}_i) + \mathbf{div}(\rho_i\, \boldsymbol{u}_i \otimes \boldsymbol{u}_i) + \mathbf{grad}\, p_i = n_i q_i(\boldsymbol{E} + \boldsymbol{u}_i \times \boldsymbol{B}) + \boldsymbol{Tr}_i\,,$$
$$\mathbf{grad}\, p_e = n_e q_e(\boldsymbol{E} + \boldsymbol{u}_e \times \boldsymbol{B}) + \boldsymbol{Tr}_e.$$

Adding up these two equations (recall that $\boldsymbol{Tr}_i + \boldsymbol{Tr}_e = 0$), we find

$$\frac{\partial}{\partial t}(\rho_i\, \boldsymbol{u}_i) + \mathbf{div}(\rho_i\, \boldsymbol{u}_i \otimes \boldsymbol{u}_i) + \mathbf{grad}(p_i + p_e) = n_i q_i(\boldsymbol{u}_i - \boldsymbol{u}_e) \times \boldsymbol{B}.$$

Moreover, we know from the definition of the current density that one has $\boldsymbol{J} = n_e q_e \boldsymbol{u}_e + n_i q_i \boldsymbol{u}_i = n_i q_i(\boldsymbol{u}_i - \boldsymbol{u}_e)$, so the right-hand side can finally be expressed in terms of $\boldsymbol{J}$ and $\boldsymbol{B}$ only:

$$\frac{\partial}{\partial t}(\rho_i\, \boldsymbol{u}_i) + \mathbf{div}(\rho_i\, \boldsymbol{u}_i \otimes \boldsymbol{u}_i) + \mathbf{grad}(p_i + p_e) = \boldsymbol{J} \times \boldsymbol{B}. \tag{1.92}$$

One could carry out the same analysis for the evolution of the mean energy. In the same spirit as Eq. (1.86), the energy conservation law writes $H_i + H_e = -\boldsymbol{Tr}_i \cdot \boldsymbol{u}_i - \boldsymbol{Tr}_e \cdot \boldsymbol{u}_e$, where the sum $H_i + H_e$ corresponds to the Joule effect. It is omitted here (see Eq. (1.98) below for the final result).

In particular, a relevant set of hydrodynamical variables is $\rho = \rho_i$, $\boldsymbol{u} = \boldsymbol{u}_i$, and $p = p_i + p_e$. Based on this observation, it turns out that one can consider the electrically neutral plasma as a one-fluid.

Let us return now to Maxwell's equations. In the *MHD* model, the displacement current $\partial_t \boldsymbol{D}$ is always neglected with respect to the induced current $\boldsymbol{J}$.

This corresponds to the magnetic quasi-static model (see the upcoming section 1.4). Moreover, we know that $\varrho = n_e q_e + n_i q_i = 0$. The electric field $\boldsymbol{E}$ is thus divergence-free (more precisely, $\operatorname{div} \varepsilon \boldsymbol{E} = 0$). In terms of the Helmholtz decomposition (1.120) (see section 1.4 again), this means that $\boldsymbol{E}$ is transverse: $\boldsymbol{E} = \boldsymbol{E}^T$. So, Maxwell's equations write

$$\mathbf{curl}\, \mu^{-1} \boldsymbol{B} = \boldsymbol{J}, \tag{1.93}$$

$$\frac{\partial \boldsymbol{B}}{\partial t} + \mathbf{curl}\, \boldsymbol{E}^T = 0, \tag{1.94}$$

$$\operatorname{div} \boldsymbol{B} = 0. \tag{1.95}$$

We note that Eq. (1.93) allows us to express the right-hand side of Eq. (1.92) in terms of $\boldsymbol{B}$ only, since one has

$$\boldsymbol{J} \times \boldsymbol{B} = \mathbf{curl}(\mu^{-1} \boldsymbol{B}) \times \boldsymbol{B}.$$

Now, the equation governing the evolution of $\boldsymbol{B}$, namely Faraday's law (1.94) requires knowledge of $\boldsymbol{E}^T$. It appears that (see, for instance, [156], Eq. (7.12)), to take the motion of the fluid into account, Ohm's law (1.39) can be generalized to

$$\boldsymbol{J} = \sigma_S (\boldsymbol{E}^T + \boldsymbol{u} \times \boldsymbol{B}) \,.$$

(σ_S is sometimes called the Spitzer conductivity.)
With this relation, we can remove the electric field from Faraday's law:

$$\begin{aligned} \mathbf{curl}\, \boldsymbol{E}^T &= -\, \mathbf{curl}(\boldsymbol{u} \times \boldsymbol{B}) + \mathbf{curl}(\sigma_S^{-1} \boldsymbol{J}) \\ &= -\, \mathbf{curl}(\boldsymbol{u} \times \boldsymbol{B}) + \mathbf{curl}(\sigma_S^{-1}\, \mathbf{curl}(\mu^{-1} \boldsymbol{B})). \end{aligned}$$

The main conclusion is that, for the magnetohydrodynamics model (MHD) that governs the evolution of the plasma, a relevant set of variables is ρ, $\boldsymbol{u}$, p, and $\boldsymbol{B}$. Let us recall them here. For the sake of completeness, we have added Eq. (1.98), which governs the evolution of the mean energy, with the parameter γ set to 5/3:

$$\frac{\partial \rho}{\partial t} + \operatorname{div}(\rho\, \boldsymbol{u}) = 0 \,, \tag{1.96}$$

$$\frac{\partial}{\partial t}(\rho\, \boldsymbol{u}) + \mathbf{div}(\rho\, \boldsymbol{u} \otimes \boldsymbol{u}) + \mathbf{grad}\, p = \mathbf{curl}(\mu^{-1} \boldsymbol{B}) \times \boldsymbol{B} \,, \tag{1.97}$$

$$\frac{\rho^\gamma}{\gamma - 1} \left(\frac{\partial}{\partial t}(p\, \rho^{-\gamma}) + \boldsymbol{u} \cdot \mathbf{grad}(p\, \rho^{-\gamma}) \right) = \sigma_S^{-1} |\, \mathbf{curl}(\mu^{-1} \boldsymbol{B})|^2 \,, \tag{1.98}$$

$$\frac{\partial \boldsymbol{B}}{\partial t} - \mathbf{curl}(\boldsymbol{u} \times \boldsymbol{B}) + \mathbf{curl}(\sigma_S^{-1}\, \mathbf{curl}(\mu^{-1} \boldsymbol{B})) = 0, \tag{1.99}$$

$$\operatorname{div} \boldsymbol{B} = 0. \tag{1.100}$$

Briefly commenting on Eqs. (1.96-1.100), we note first that Eq. (1.100) is implied by Eq. (1.99). Also, $\boldsymbol{E}^T$ and $\boldsymbol{J}$ are respectively determined by Eq.

(1.94) and Eq. (1.93). Thus, all fields can be inferred from these equations. For some applications, one can consider that $\sigma_S^{-1} = 0$, thus leading to the ideal set of MHD equations. In other words, the plasma is perfectly conducting. Contrastingly, when the plasma is resistive, one cannot set σ_S^{-1} to zero, and one has to solve the resistive set of MHD equations.

Another variant of the above model is given by the *incompressible, viscous, resistive* MHD equations, which come up when the conducting fluid is a liquid (such as molten metal or an electrolyte, e.g., salt water) rather than an ionised gas. Compared to gases, liquids are typically nearly incompressible, but much more viscous and dense; this requires different scalings and approximations. Namely, the system (1.96)–(1.100) is modified as follows:

1. The mass density ρ, or equivalently the particle density n, of the fluid is assumed to be constant: this is the incompressibility condition. The conservation equation (1.96) reduces to $\operatorname{div} \boldsymbol{u} = 0$; this equality serves as the "closure relation", replacing the adiabatic closure (1.98).
2. The momentum conservation equation (1.97) is modified by introducing a viscosity term $-\nu \Delta \boldsymbol{u}$. Under certain scaling assumptions, such a term appears [59, §2.2] when the system of hydrodynamic equations is derived from the Boltzmann equation (1.81), rather than the Vlasov equation (1.87).
3. We allow for some external, non-electromagnetic force $\boldsymbol{f}$ (such as gravity) acting on the fluid, in addition to the Lorentz and pressure forces.

Thus, we arrive at the system:

$$\rho \frac{\partial \boldsymbol{u}}{\partial t} - \nu \, \Delta \boldsymbol{u} + \rho \, (\boldsymbol{u} \cdot \nabla) \boldsymbol{u} + \mathbf{grad}\, p = \mathbf{curl}(\mu^{-1} \boldsymbol{B}) \times \boldsymbol{B} + \boldsymbol{f}, \tag{1.101}$$

$$\frac{\partial \boldsymbol{B}}{\partial t} - \mathbf{curl}(\boldsymbol{u} \times \boldsymbol{B}) + \mathbf{curl}(\sigma_S^{-1} \, \mathbf{curl}(\mu^{-1} \boldsymbol{B})) = 0, \tag{1.102}$$

$$\operatorname{div} \boldsymbol{u} = 0, \qquad \operatorname{div} \boldsymbol{B} = 0. \tag{1.103}$$

The notation $(\boldsymbol{a} \cdot \nabla) \boldsymbol{b}$ stands for $\sum_{i=1}^{3} a_i \, \partial_{x_i} \boldsymbol{b}$; the replacement of $\mathbf{div}(\boldsymbol{u} \otimes \boldsymbol{u})$ with $(\boldsymbol{u} \cdot \nabla) \boldsymbol{u}$ is possible thanks to $\operatorname{div} \boldsymbol{u} = 0$. See Chapter 10 for mathematical studies on how to solve the MHD equations.

1.4 Approximate models

We have already introduced the time-dependent Maxwell equations formulated as problems with field or potential unknowns. Let us now adopt a different point of view. As a matter of fact, many problems in computational electromagnetics can be efficiently solved at a much lower cost by using approximate models of Maxwell's equations. As a particular case, the static models are straightforward approximations corresponding to problems with

"very slow" time variations or "zero frequency" phenomena (with a pulsation ω "equal to zero"), so that one can neglect all time derivatives. We also present a fairly comprehensive study on how to derive approximate models, as in [97, 178]. These models are studied mathematically in Chapter 6.

1.4.1 The static models

Let us consider problems (and solutions) that are time-independent, namely static equations, in a perfect medium. In other words, we assume that $\partial_t \cdot = 0$ in Maxwell's equations (1.22-1.25). This assumption leads to (with non-vanishing charge and current densities)

$$\begin{cases} \mathbf{curl}\, \boldsymbol{E}^{stat} = 0, \quad \mathbf{curl}(\mathbb{\mu}^{-1} \boldsymbol{B}^{stat}) = \boldsymbol{J}, \\ \operatorname{div}(\mathbb{\varepsilon}\, \boldsymbol{E}^{stat}) = \varrho, \operatorname{div} \boldsymbol{B}^{stat} = 0, \end{cases} \tag{1.104}$$

where the superscript ^{stat} indicates that we are dealing with static unknowns. In the following two subsubsections, we will consider the electric and the magnetic cases separately. Again, they are set in all space, $\mathbb{R}^3$.

Remark 1.4.1 *Within the framework of the time-harmonic Maxwell equations (see §1.2), we looked for solutions to Maxwell's equations with an explicit time-dependence. In this setting, the static equations can be viewed as time-harmonic Maxwell equations with a pulsation ω "equal to zero". This interpretation can be useful, for instance, for performing an asymptotic analysis.*

Electrostatics

Equation $\mathbf{curl}\, \boldsymbol{E}^{stat} = 0$ yields $\boldsymbol{E}^{stat} = -\,\mathbf{grad}\, \phi^{stat}$, where ϕ^{stat} denotes the *electrostatic potential*; see the connection to (1.33) when $\partial_t \cdot = 0$. As $\operatorname{div}(\mathbb{\varepsilon} \boldsymbol{E}^{stat}) = \varrho$, the potential ϕ^{stat} solves the elliptic[15] problem

$$-\operatorname{div}(\mathbb{\varepsilon}\, \mathbf{grad}\, \phi^{stat}) = \varrho\ .$$

Moreover, in a homogeneous medium (for instance, in vacuum $\mathbb{\varepsilon} = \varepsilon_0 \mathbb{I}_3$), we obtain the *electrostatic problem* with unknown ϕ^{stat}

$$-\Delta \phi^{stat} = \frac{\varrho}{\varepsilon_0}. \tag{1.105}$$

This is the *Poisson equation* in variable ϕ^{stat} (see, for instance, Chapter 3 of [104, Volume II]), which is an elliptic PDE, and by definition, a static problem, much cheaper to solve computationally than the complete set of Maxwell's equations. Then, one sets $\boldsymbol{E}^{stat} = -\,\mathbf{grad}\, \phi^{stat}$ to recover the electrostatic field.

[15] See the upcoming §1.5 for a precise definition.

Magnetostatics

In a similar manner, a static formulation can be written for the magnetic induction $\boldsymbol{B}^{stat}$. By applying the curl operator to equation $\mathbf{curl}(\mu^{-1}\boldsymbol{B}^{stat}) = \boldsymbol{J}$, we obtain

$$\mathbf{curl}\,\mathbf{curl}(\mu^{-1}\boldsymbol{B}^{stat}) = \mathbf{curl}\,\boldsymbol{J}.$$

In a homogeneous medium (for instance, in vacuum $\mu = \mu_0 \mathbb{I}_3$), and using the identity (1.36) again, we obtain the magnetostatic problem

$$-\Delta \boldsymbol{B}^{stat} = \mu_0\,\mathbf{curl}\,\boldsymbol{J}\ , \quad \mathrm{div}\,\boldsymbol{B}^{stat} = 0\ ,$$

whose solution, $\boldsymbol{B}^{stat}$, is called the *magnetostatic field*. This is a vector Poisson equation, i.e., an elliptic PDE (left Eq.), with a constraint (right Eq.). Again, this formulation leads to problems that are easier to solve than the complete set of Maxwell's equations.
Note also that one has $\boldsymbol{B}^{stat} = \mathbf{curl}\,\boldsymbol{A}^{stat}$ (see (1.35)). If, moreover, the Coulomb gauge is chosen to remove the indetermination on the vector potential $\boldsymbol{A}^{stat}$, one finds the alternate magnetostatic problem

$$-\Delta \boldsymbol{A}^{stat} = \mu_0 \boldsymbol{J}\ , \quad \mathrm{div}\,\boldsymbol{A}^{stat} = 0\ , \tag{1.106}$$

with $\boldsymbol{A}^{stat}$ as the unknown. Then, one sets $\boldsymbol{B}^{stat} = \mathbf{curl}\,\boldsymbol{A}^{stat}$ to recover the magnetostatic field.

1.4.2 A scaling of Maxwell's equations

In order to define an approximate model, one has to neglect one or several terms in Maxwell's equations. The underlying idea is to identify parameters, whose value can be small (and thus, possibly negligible). To derive a hierarchy of *approximate models*, one can perform an asymptotic analysis of those equations with respect to the parameters. This series of models is called a hierarchy, since considering a supplementary term in the asymptotic expansion leads to a new approximate model. An analogous principle is used, for instance, to build approximate (paraxial) models when simulating data migration in geophysics modelling (cf. among others [43], [86]). From a numerical point of view, the approximate models are useful, first and foremost, if they coincide with a physical framework, and second, because in general, they efficiently solve the problem at a lower computational cost.
In the sequel, let us show how to build such approximate models formally (i.e., without mathematical justifications), recovering, in the process, static models, but also other intermediate ones.

Let us consider Maxwell's equations in vacuum (1.26-1.29). As a first step, we introduce a *scaling* of these equations based on the following characteristic values:

$$
\begin{aligned}
\overline{l}: &\ \text{characteristic length,}\\
\overline{t}: &\ \text{characteristic time,}\\
\overline{v}: &\ \text{characteristic velocity, with } \overline{v} = \overline{l}/\overline{t},\\
\overline{E}, \overline{B}: &\ \text{scaling for } \boldsymbol{E} \text{ and } \boldsymbol{B},\\
\overline{\varrho}, \overline{J}: &\ \text{scaling for } \varrho \text{ and } \boldsymbol{J}\,.
\end{aligned}
$$

In order to build dimensionless Maxwell equations, we set

$$
\begin{aligned}
\boldsymbol{x} = \overline{l}\boldsymbol{x}' \quad &\Rightarrow \frac{\partial}{\partial x_i} = \frac{1}{\overline{l}}\frac{\partial}{\partial x_i'}\\
t = \overline{t}t' \quad &\Rightarrow \frac{\partial}{\partial t} = \frac{1}{\overline{t}}\frac{\partial}{\partial t'}\\
\boldsymbol{E} = \overline{E}\boldsymbol{E}'&, \text{ etc.}
\end{aligned}
$$

We thus obtain for Maxwell's equations in vacuum

$$
\frac{\overline{v}}{c}\frac{\overline{E}}{c\overline{B}}\frac{\partial \boldsymbol{E}'}{\partial t'} - \mathbf{curl}'\,\boldsymbol{B}' = -\overline{J}\frac{\overline{l}\mu_0}{\overline{B}}\boldsymbol{J}', \tag{1.107}
$$

$$
\frac{\overline{v}}{c}\frac{c\overline{B}}{\overline{E}}\frac{\partial \boldsymbol{B}'}{\partial t'} + \mathbf{curl}'\,\boldsymbol{E}' = 0, \tag{1.108}
$$

$$
\mathrm{div}'\,\boldsymbol{E}' = \overline{\varrho}\frac{\overline{l}}{\varepsilon_0\overline{E}}\varrho', \tag{1.109}
$$

$$
\mathrm{div}'\,\boldsymbol{B}' = 0. \tag{1.110}
$$

As far as the charge conservation equation (1.10) is concerned, we find

$$
\frac{\overline{\varrho}\,\overline{v}}{\overline{J}}\frac{\partial \varrho'}{\partial t'} + \mathrm{div}'\,\boldsymbol{J}' = 0.
$$

Now, given $\overline{l}, \overline{t}$, $\overline{\varrho}$, we choose $\overline{E}, \overline{B}, \overline{J}$ such that

$$
\overline{E} = \frac{\overline{\varrho}\overline{l}}{\varepsilon_0}, \quad \overline{B} = \frac{\overline{E}}{c}, \quad \overline{J} = c\overline{\varrho} = \frac{\overline{B}}{\overline{l}\mu_0}\,.
$$

We define the parameter η with

$$
\eta = \frac{\overline{v}}{c}\,.
$$

Maxwell's equations in the dimensionless variables $\boldsymbol{E}'$, $\boldsymbol{B}'$ can be written as

$$
\begin{aligned}
\eta\frac{\partial \boldsymbol{E}'}{\partial t'} - \mathbf{curl}'\,\boldsymbol{B}' &= -\boldsymbol{J}',\\
\eta\frac{\partial \boldsymbol{B}'}{\partial t'} + \mathbf{curl}'\,\boldsymbol{E}' &= 0,\\
\mathrm{div}'\,\boldsymbol{E}' &= \varrho',\\
\mathrm{div}'\,\boldsymbol{B}' &= 0\,,
\end{aligned}
$$

while the charge conservation equation writes

$$\eta \frac{\partial \varrho'}{\partial t'} + \operatorname{div}' \boldsymbol{J}' = 0.$$

Assuming now that the characteristic velocity $\overline{v}$ is small with respect to the speed of light c, we have

$$\eta = \frac{\overline{v}}{c} \ll 1\,. \tag{1.111}$$

This assumption is usually called the *low frequency approximation*, since it assumes "slow" time variations, which correspond after a time Fourier Transform to small pulsations/frequencies.

Obviously, the static models are obtained by setting $\eta = 0$ in these equations. Thus, they appear as a zero-order approximation of Maxwell's equations. Next, we derive more accurate approximate models.

1.4.3 Quasi-static models

More general approximate models can be obtained by discriminating the time variations, respectively, of the electric field and the magnetic induction. Hence, after the scaling step in Maxwell's equations in vacuum, that is, in Eqs. (1.107-1.110), if we suppose that

$$\overline{v}\frac{\overline{B}}{\overline{E}} \ll 1 \quad \text{and} \quad \frac{\overline{v}}{c}\frac{\overline{E}}{c\overline{B}} \approx 1\,,$$

we easily obtain that we may neglect the time derivative $\partial_t \boldsymbol{B}$ in Faraday's law, whereas the coefficient of the time derivative $\partial_t \boldsymbol{E}$ in Ampère's law is comparable to one. We then obtain the *electric quasi-static model*, which can be written in the physical variables $\boldsymbol{E}$, $\boldsymbol{B}$ as

$$\mathbf{curl}\, \boldsymbol{E} = 0, \tag{1.112}$$

$$\operatorname{div} \boldsymbol{E} = \frac{1}{\varepsilon_0}\varrho, \tag{1.113}$$

$$\mathbf{curl}\, \boldsymbol{B} = \mu_0\, \boldsymbol{J} + \frac{1}{c^2}\frac{\partial \boldsymbol{E}}{\partial t}, \tag{1.114}$$

$$\operatorname{div} \boldsymbol{B} = 0. \tag{1.115}$$

It can be proven (see §6.4) that this model is a first-order approximation of Maxwell's equations. As mentioned, it is formally built by assuming that the time variations of the magnetic induction are negligible.

In a similar way, let us suppose, contrastingly, that

$$\frac{\overline{v}}{c}\frac{\overline{E}}{c\overline{B}} \ll 1 \quad \text{and} \quad \overline{v}\frac{\overline{B}}{\overline{E}} \approx 1\,,$$

thus we may neglect the time derivative $\partial_t \boldsymbol{E}$ in Ampère's law, whereas the coefficient of the time derivative $\partial_t \boldsymbol{B}$ in Faraday's law is comparable to one. We thus obtain the *magnetic quasi-static model*, which can also be written in the physical variables $\boldsymbol{E}$, $\boldsymbol{B}$ as

$$\mathbf{curl}\, \boldsymbol{B} = \mu_0 \boldsymbol{J}, \tag{1.116}$$

$$\operatorname{div} \boldsymbol{B} = 0, \tag{1.117}$$

$$\mathbf{curl}\, \boldsymbol{E} = -\frac{\partial \boldsymbol{B}}{\partial t}, \tag{1.118}$$

$$\operatorname{div} \boldsymbol{E} = \frac{1}{\varepsilon_0} \varrho. \tag{1.119}$$

This set of equations constitutes another first-order approximation of Maxwell's equations, which is derived formally by assuming that the time variations of the electric field, namely the displacement current, are negligible.

At first glance, there is no difference between the quasi-static electric equations (1.112-1.113) plus the quasi-static magnetic equations (1.116-1.117) and the static ones (1.104). However, we observe that the right-hand sides are time-dependent in the case of the quasi-static equations, whereas they are static in the other case. Let us consider, for instance, the electric quasi-static model (i.e., $\partial_t \boldsymbol{B}$ is negligible). The right-hand side ϱ of the Poisson equation (1.113) is (explicitly) time-dependent, since it is related to the electric field $\boldsymbol{E}$ that is *a priori* time-dependent. Now, with the supplementary assumption that $\partial_t \boldsymbol{E}$ is also negligible, ϱ becomes a static right-hand side and the twice quasi-static model is actually static.

From now on, it is important to note that the "quasi-static/static" difference is not only a terminological subtlety. Indeed, from a numerical point of view, solving a quasi-static problem with a time-dependent right-hand side, amounts to solving a series of static problems after the time-discretization is performed [24].

1.4.4 Darwin model

Let us introduce another approximate model, also known as the Darwin model [91]. It consists in introducing a *Helmholtz decomposition* of the electric field as

$$\boldsymbol{E} = \boldsymbol{E}^L + \boldsymbol{E}^T, \tag{1.120}$$

where $\boldsymbol{E}^L$, called the longitudinal part, is characterized by $\mathbf{curl}\, \boldsymbol{E}^L = 0$, and $\boldsymbol{E}^T$, the transverse part, is characterized by $\operatorname{div} \boldsymbol{E}^T = 0$. Starting from Maxwell's equations in vacuum, one then assumes that $\varepsilon_0 \partial_t \boldsymbol{E}^T$ can be neglected in Ampère's law: one neglects only the transverse part of the displacement current, whereas, in the quasi-static model, the total displacement

current $\varepsilon_0 \partial_t \boldsymbol{E}$ is neglected. In this sense, it is a more sophisticated model than the quasi-static one. Moreover, it can be proven (see §6.4), by using the low frequency approximation (1.111) and the resulting dimensionless form of Maxwell's equations, that this model yields a second-order approximation of the electric field and a first-order approximation of the magnetic induction.
The *Darwin model* in vacuum is written in the physical variables $\boldsymbol{E}$, $\boldsymbol{B}$ as

$$\mathbf{curl}\, \boldsymbol{E} = -\frac{\partial}{\partial t}\boldsymbol{B}\ , \qquad \operatorname{div} \boldsymbol{E} = \frac{\varrho}{\varepsilon_0}\ ,$$

$$\mathbf{curl}\,\mathbf{curl}\, \boldsymbol{B} = \mu_0\ \mathbf{curl}\, \boldsymbol{J}\ , \qquad \operatorname{div} \boldsymbol{B} = 0. \tag{1.121}$$

Then, if one uses the Helmholtz decomposition (1.120) with $\operatorname{div} \boldsymbol{E}^T = 0$ and $\boldsymbol{E}^L = -\,\mathbf{grad}\,\phi$, we see that the three fields $\boldsymbol{B}$, $\boldsymbol{E}^T$ and ϕ solve three elliptic PDEs, namely (1.121) and

$$-\Delta\phi = \frac{\varrho}{\varepsilon_0}\ ,$$

$$\mathbf{curl}\, \boldsymbol{E}^T = -\frac{\partial}{\partial t}\boldsymbol{B}\ , \qquad \operatorname{div} \boldsymbol{E}^T = 0.$$

Compared with the original time-dependent problem, these problems are easier to solve. As a matter of fact, only the data are time-dependent, while the operators are time-independent.

To conclude, we emphasize that the main difficulty, when using the Darwin model in a bounded domain, is how to define suitable boundary conditions for each part of the electric field: more precisely, how one should "split" the boundary condition on $\boldsymbol{E}$ into two boundary conditions on $\boldsymbol{E}^L$ and $\boldsymbol{E}^T$. We refer the reader to [97], [84] for more details (see also §6.4).

1.4.5 Coupled approximate models

When considering the Vlasov-Maxwell model, in many cases, the interactions between particles are mainly electrostatic; the self-consistent magnetic field is negligible. Furthermore, particles have velocities that are much smaller than c: they obey the non-relativistic dynamic. So, one reverts to the position-velocity description of phase space $(\boldsymbol{x}, \boldsymbol{v}) \in \mathbb{R}^3_{\boldsymbol{x}} \times \mathbb{R}^3_{\boldsymbol{v}}$; in addition, in the Lorentz force, the term $\boldsymbol{v} \times \boldsymbol{B}$ is negligible before $\boldsymbol{E}$, unless there is a strong external magnetic field (as in tokamaks, for instance). One replaces the Maxwell's equations with an electric quasi-static model; and the magnetic part (1.114)–(1.115) is irrelevant. The electric part (1.112)–(1.113) is rephrased as $\boldsymbol{E} = -\,\mathbf{grad}\,\phi$ and $-\Delta\phi = \varrho/\varepsilon_0$. Thus, we arrive at the *Vlasov–Poisson system*:

$$\frac{\partial f}{\partial t} + \boldsymbol{v} \cdot \nabla_{\boldsymbol{x}} f - \frac{q}{m}\, \nabla_{\boldsymbol{x}}\phi \cdot \nabla_{\boldsymbol{v}} f = 0\,;$$

$$-\Delta_{\boldsymbol{x}}\phi = \frac{\varrho}{\varepsilon_0},$$

with ϱ given by (1.82). Also, there exist intermediate models such as Vlasov–Darwin, which couples Eq. (1.87) with the model of §1.4.4 (see, for instance, [7, 38]).

1.5 Elements of mathematical classifications

In this section, we first recall the definition of some standard operators, together with a classification of the *partial differential equations* (PDE) and their physical counterparts. In a second part, we reformulate and classify Maxwell's equations. In the last part, we present well-known computations that establish a correspondence between the time-harmonic dependence with the notion of resonance. The material presented here is very classical: the well-informed reader may skip this section.

1.5.1 Standard differential operators

Let us begin by recalling the definitions of the four operators **grad**, div, Δ and **curl**, which we use throughout this book.
Let E_n be a finite-dimensional Euclidean space of dimension n, endowed with the scalar product $\cdot$, and let A_n be an affine space over E_n. Furthermore, let U be an open subset of A_n. Respectively introduce a *scalar field* on U, $f : U \to \mathbb{R}$, and a *vector field* on U, $\boldsymbol{f} : U \to E_n$.

Assume that f is differentiable at $M \in U$, and let $Df(M)$ be its differential at M. Then, the gradient of f at M is defined by

$$\mathbf{grad}\, f(M) \cdot \boldsymbol{v} := Df(M) \bullet \boldsymbol{v}, \quad \forall \boldsymbol{v} \in E_n.$$

Provided that f is differentiable on U, the vector field $M \mapsto \mathbf{grad}\, f(M)$ is called the *gradient of* f on U. The operator, **grad**, is called the *gradient operator*.

Assume that $\boldsymbol{f}$ is differentiable at $M \in U$, then the divergence of $\boldsymbol{f}$ at M is defined by

$$\operatorname{div} \boldsymbol{f}(M) := \operatorname{tr}(D\boldsymbol{f}(M)),$$

where tr denotes the trace of a linear operator. Provided that $\boldsymbol{f}$ is differentiable on U, the scalar field $M \mapsto \operatorname{div} \boldsymbol{f}(M)$ is called the *divergence of* $\boldsymbol{f}$ on U. The operator, div, is called the *divergence operator*.

Assume that f is twice differentiable at $M \in U$, then the Laplacian of f at M is defined by

$$\Delta f(M) := \operatorname{div}(\mathbf{grad}\, f)(M).$$

Provided that f is twice differentiable on U, the scalar field $M \mapsto \Delta f(M)$ is called the *Laplacian of* f on U. The operator, Δ, is called the *Laplace operator*.

Consider that $n = 3$, and assume that $\boldsymbol{f}$ is differentiable at $M \in U$. Then, for any given $\boldsymbol{v}_0 \in E_3$, the mapping $\boldsymbol{f} \times \boldsymbol{v}_0 \ : \ U \to E_3$ is differentiable at M. The curl of $\boldsymbol{f}$ at M is defined by

$$\mathbf{curl}\, \boldsymbol{f}(M) \cdot \boldsymbol{v}_0 := \mathrm{div}(\boldsymbol{f} \times \boldsymbol{v}_0)(M), \quad \forall \boldsymbol{v}_0 \in E_3.$$

Provided that $\boldsymbol{f}$ is differentiable on U, the vector field $M \mapsto \mathbf{curl}\, \boldsymbol{f}(M)$ is called the *curl of* $\boldsymbol{f}$ on U. The operator, **curl**, is called the *curl operator*.

In physics, one is mainly interested in three-dimensional Euclidean and affine spaces E_3 and A_3. Moreover, to obtain expressions that involve partial derivatives, let us introduce $(\boldsymbol{e}_1, \boldsymbol{e}_2, \boldsymbol{e}_3)$ as an orthonormal basis of E_3, $(O, \boldsymbol{e}_1, \boldsymbol{e}_2, \boldsymbol{e}_3)$ as an affine (or cartesian) coordinate system of A_3, and finally, (x_1, x_2, x_3) as the associated coordinates, that is, $M = O + \sum_{i=1,2,3} x_i \boldsymbol{e}_i$. We can write $\boldsymbol{f} = \sum_{i=1,2,3} f_i \boldsymbol{e}_i$. Then, with respect to the affine coordinate system, the four operators defined above can be respectively expressed as

$$\mathbf{grad}\, f = \sum_{i=1}^{i=3} \frac{\partial f}{\partial x_i} \boldsymbol{e}_i, \quad \mathrm{div}\, \boldsymbol{f} = \sum_{i=1}^{i=3} \frac{\partial f_i}{\partial x_i}, \quad \Delta f = \sum_{i=1}^{i=3} \frac{\partial^2 f}{\partial x_i^2},$$
$$\mathbf{curl}\, \boldsymbol{f} = \left(\frac{\partial f_3}{\partial x_2} - \frac{\partial f_2}{\partial x_3} \right) \boldsymbol{e}_1 + \left(\frac{\partial f_1}{\partial x_3} - \frac{\partial f_3}{\partial x_1} \right) \boldsymbol{e}_2 + \left(\frac{\partial f_2}{\partial x_1} - \frac{\partial f_1}{\partial x_2} \right) \boldsymbol{e}_3.$$

1.5.2 Partial differential equations

We begin with the simple case of a linear second-order two-dimensional partial differential equation

$$A \frac{\partial^2 u}{\partial x^2} + 2B \frac{\partial^2 u}{\partial x \partial y} + C \frac{\partial^2 u}{\partial y^2} + D \frac{\partial u}{\partial x} + E \frac{\partial u}{\partial y} + F u = G, \tag{1.122}$$

where the solution u, the coefficients $A, B, \ldots, F$ and the data G are functions of (x, y). It is well known that, following the sign of the discriminant

$$B^2 - AC\,,$$

one can build a classification of partial differential equations that write as in Eq. (1.122) in a domain *Dom* of $\mathbb{R}^2$. We have the classes:

1. if $B^2 - AC < 0$ on the domain *Dom*, the PDE (1.122) is of the elliptic type. It corresponds to equilibrium problems, such as, for instance, the static problems, and it can be written in a canonical form, the prototype being the Poisson equation (cf. §1.4.1).

2. if $B^2 - AC = 0$ on the domain Dom, the PDE (1.122) is of the parabolic type. It can also be transformed into a canonical form, a typical example being the heat transfer equation. From a physical point of view, this corresponds to diffusion problems.
3. if $B^2 - AC > 0$ on the domain Dom, the PDE (1.122) is of the hyperbolic type. After rewriting the equation under its canonical form, one can easily identify the wave equation as the prototype of the hyperbolic equation. An important property of the hyperbolicity is that it corresponds to propagation of solutions with a finite velocity.

If we consider now the more general second-order linear partial differential equation set in a domain of $\mathbb{R}^n$, that is, in n variables, it can be written as

$$\sum_{i=1}^{n}\sum_{j=1}^{n} a_{ij}\frac{\partial^2 u}{\partial x_i \partial x_j} + \sum_{i=1}^{n} b_i \frac{\partial u}{\partial x_i} + cu = d, \tag{1.123}$$

where the solution u, the coefficients a_{ij}, b_i, c, and the data d are functions of the n variables $(x_i)_{1\le i\le n}$. In order to classify the PDEs (1.123) into different types, we consider the so-called principal part, that is, the highest-order terms in (1.123), which we express as

$$\sum_{i=1}^{n}\sum_{j=1}^{n} a_{ij}\frac{\partial^2}{\partial x_i \partial x_j} = \boldsymbol{\partial}\cdot\mathbb{A}\boldsymbol{\partial} + \text{ l.o.t.} \tag{1.124}$$

Above, $\boldsymbol{\partial} = (\frac{\partial}{\partial x_1}, \ldots, \frac{\partial}{\partial x_n})^T \in \mathbb{R}^n$, and $\mathbb{A}$ denotes the $n\times n$ matrix of the coefficients a_{ij}, and l.o.t. (or lower-order terms) stands for first or zero-order terms that vanish if the a_{ij}s are constant. Now, using Schwarz's theorem $\partial^2_{ij} = \partial^2_{ji}$, one can rewrite the coefficients a_{ij} so as to obtain a symmetric matrix $\mathbb{A}$, which we assume to belong to $\mathbb{R}^{n\times n}$ (i.e., it is a real-valued matrix). Classically, all eigenvalues of the symmetric real-valued matrix $\mathbb{A}$ are real. We denote them by $\lambda_1, \lambda_2, \ldots, \lambda_n$, counted with their multiplicity. Furthermore, we introduce a corresponding orthonormal set of eigenvectors $\boldsymbol{u}_1, \ldots, \boldsymbol{u}_n$, such that $\mathbb{A}$ can be diagonalized as

$$\mathbb{U}^T\,\mathbb{A}\,\mathbb{U} = \mathbb{D} = \begin{pmatrix} \lambda_1 & \ldots & 0 \\ \vdots & & \vdots \\ 0 & \ldots & \lambda_n \end{pmatrix},$$

where $\mathbb{U}$ is an orthogonal matrix ($\mathbb{U}^T = \mathbb{U}^{-1}$) with the eigenvectors $\boldsymbol{u}_i$ as its n columns. Introducing now the directional derivative operator

$$\frac{\partial}{\partial \xi_i} = \boldsymbol{u}_i\cdot\boldsymbol{\partial}, \quad 1\le i\le n\,,$$

we define the vector differential operator

$$\boldsymbol{\partial}' = \mathbb{U}^T \boldsymbol{\partial}\,, \text{ with } \boldsymbol{\partial}' = \begin{pmatrix} \partial_{\xi_1} \\ \vdots \\ \partial_{\xi_n} \end{pmatrix}.$$

Plugging this expression into the first term of the right-hand side of (1.124) and using the orthogonal character of the matrix $\mathbb{U}$ gives us

$$\boldsymbol{\partial} \cdot \mathbb{A}\boldsymbol{\partial} = \mathbb{U}^T \boldsymbol{\partial} \cdot \mathbb{D}\mathbb{U}^T \boldsymbol{\partial} = \boldsymbol{\partial}' \cdot \mathbb{D}\boldsymbol{\partial}'\,.$$

In this way, one gets that (1.124) can be rewritten equivalently

$$\sum_{i=1}^{n}\sum_{j=1}^{n} a_{ij} \frac{\partial^2}{\partial x_i \partial x_j} = \sum_{i=1}^{n} \lambda_i \frac{\partial^2}{\partial \xi_i^2} + \text{l.o.t.}\,,$$

where the l.o.t. here again represents the lower-order terms. This expression provides an obvious way to extend the previous classification to the general case, which appears to be strongly related to the sign of the eigenvalues λ_i. Hence, we define, by analogy to the two-dimensional case, several classes of partial differential equation:

1. if either $\lambda_i > 0, \forall i$ or $\lambda_i < 0, \forall i$, the equation is said to be *elliptic*;
2. if exactly one of the $\lambda_i > 0$ or $\lambda_i < 0$ and all other $(\lambda_j)_{j\neq i}$ exhibit an opposite sign, the equation is said to be *hyperbolic*;
3. if one of the $\lambda_i = 0$, the equation can be *parabolic*. For that, all other $(\lambda_j)_{j\neq i}$ must exhibit a fixed sign;
4. other instances are possible:
   - if $\text{Card}\{\lambda_i = 0\} \geq 2$, the equation is said to be *semi-parabolic*;
   - if $\lambda_i \neq 0, \forall i$, and $\text{Card}\{\lambda_i > 0\} \geq 2$, $\text{Card}\{\lambda_i < 0\} \geq 2$, the equation is said to be *semi-hyperbolic*.

When we are dealing with a system of equations that can be reformulated as one or several PDEs acting on vector unknowns, we refer to it as a *vector PDEs*. As we shall see in the next subsection, the time-dependent Maxwell equations are an example of hyperbolic vector PDEs.

To end this subsection, we remark that there exist other ways to define the elliptic, parabolic and hyperbolic types of equation. In particular, when we deal with systems of equations, one can relate the classification to the inversibility of the principal symbol of the operator, namely the Fourier transform of the highest-order terms. We refer the interested reader, for instance, to [93, 94].

1.5.3 Maxwell's equations classified

Though it is often alluded to in this chapter, we have not so far explicitly classified Maxwell's equations. It turns out to be quite easy. Assume we are considering a homogeneous medium (vacuum):

let us build ∂_t(Eq. (1.26)) + c^2 **curl**(Eq. (1.27)) − c^2 **grad**(Eq. (1.28)) formally, to find

$$\frac{\partial^2 \boldsymbol{E}}{\partial t^2} - c^2\, \Delta \boldsymbol{E} = -\frac{1}{\varepsilon_0}\left(\frac{\partial \boldsymbol{J}}{\partial t} + c^2\, \mathbf{grad}\, \varrho\right). \tag{1.125}$$

Then, build ∂_t(Eq. (1.27)) − **curl**(Eq. (1.26)) − c^2 **grad**(Eq. (1.29)) to find

$$\frac{\partial^2 \boldsymbol{B}}{\partial t^2} - c^2\, \Delta \boldsymbol{B} = \frac{1}{\varepsilon_0}\, \mathbf{curl}\, \boldsymbol{J}. \tag{1.126}$$

Both vector PDEs, respectively governing the behavior of $\boldsymbol{E}$ and $\boldsymbol{B}$, are vector wave equations and, as such, they are *hyperbolic*. In particular, the electromagnetic fields propagate with finite speed (equal to c, see §1.2.2). They have to be supplemented with some first-order initial conditions. Indeed, to obtain Eqs. (1.125-1.126), one differentiates in time both Ampère's and Faraday's laws. If one keeps only these equations, constant values (w.r.t. the time variable) of those laws – considered as mathematical expressions – are neglected. Hence, one adds the relations

$$\begin{cases} \left(\dfrac{\partial \boldsymbol{E}}{\partial t} - c^2\, \mathbf{curl}\, \boldsymbol{B}\right)|_{t=0} = -\dfrac{1}{\varepsilon_0}\boldsymbol{J}|_{t=0} \\ \left(\dfrac{\partial \boldsymbol{B}}{\partial t} + \mathbf{curl}\, \boldsymbol{E}\right)|_{t=0} = 0 \end{cases},$$

which equivalently write, with the help of the zero-order initial condition (1.31),

$$\frac{\partial \boldsymbol{E}}{\partial t}(0) = \boldsymbol{E}_1 := c^2\, \mathbf{curl}\, \boldsymbol{B}_0 - \frac{1}{\varepsilon_0}\boldsymbol{J}(0), \qquad \frac{\partial \boldsymbol{B}}{\partial t}(0) = \boldsymbol{B}_1 := -\,\mathbf{curl}\, \boldsymbol{E}_0. \tag{1.127}$$

Also, one must keep Gauss's law (1.28) and the absence of magnetic monopoles (1.29), which appear here as *constraints* on the solutions to Eqs. (1.125-1.126).

Remark 1.5.1 *One can choose not to add contributions resulting from the divergence part of the fields, to reach*

$$\frac{\partial^2 \boldsymbol{E}}{\partial t^2} + c^2\, \mathbf{curl}\,\mathbf{curl}\, \boldsymbol{E} = -\frac{1}{\varepsilon_0}\frac{\partial \boldsymbol{J}}{\partial t}, \tag{1.128}$$

$$\frac{\partial^2 \boldsymbol{B}}{\partial t^2} + c^2\, \mathbf{curl}\,\mathbf{curl}\, \boldsymbol{B} = \frac{1}{\varepsilon_0}\, \mathbf{curl}\, \boldsymbol{J}\,. \tag{1.129}$$

Let us examine briefly – and *formally* – how the set of second-order equations (1.125-1.126), supplemented with the initial conditions (1.31) and (1.127) and constraints (1.28-1.29), allow us to recover the original set of Maxwell's equations (1.26-1.29), supplemented with the initial condition (1.31). Gauss's law and the absence of magnetic monopoles are contained in both sets of equations, and so is the zero-order initial condition. To recover Ampère's and Faraday's laws, introduce the quantities

$$\boldsymbol{U} := \frac{\partial \boldsymbol{E}}{\partial t} - c^2\ \mathbf{curl}\,\boldsymbol{B} + \frac{1}{\varepsilon_0}\boldsymbol{J}, \qquad \boldsymbol{V} := \frac{\partial \boldsymbol{B}}{\partial t} + \mathbf{curl}\,\boldsymbol{E}.$$

According to the initial conditions (1.31) and (1.127), one has $\boldsymbol{U}(0) = \boldsymbol{V}(0) = 0$. Then, after some elementary manipulations, one finds that

$$\frac{\partial \boldsymbol{U}}{\partial t} + c^2\ \mathbf{curl}\,\boldsymbol{V} = 0, \quad \frac{\partial \boldsymbol{V}}{\partial t} - \mathbf{curl}\,\boldsymbol{U} = 0\,,$$
$$\operatorname{div}\boldsymbol{U} = 0, \qquad \operatorname{div}\boldsymbol{V} = 0.$$

(Above, one uses the charge conservation equation (1.10) to prove that $\boldsymbol{U}$ is divergence-free.)
In other words, we showed that the couple $(\boldsymbol{V}, c^{-2}\boldsymbol{U})$ solves the set of equations (1.26-1.29) with zero right-hand sides, and with zero initial condition (1.31). So, it is equal to zero, according to the results on the solvability of Maxwell's equations. We thus conclude that it holds that

$$\frac{\partial \boldsymbol{E}}{\partial t} - c^2\ \mathbf{curl}\,\boldsymbol{B} = -\frac{1}{\varepsilon_0}\boldsymbol{J}, \qquad \frac{\partial \boldsymbol{B}}{\partial t} + \mathbf{curl}\,\boldsymbol{E} = 0\,,$$

as announced.

The calculations performed here formally can be mathematically justified to prove the equivalence between the first-order and the second-order Maxwell equations. We refer the reader to Chapter 7.

1.5.4 Resonance vs. time-harmonic phenomena

We consider the time-dependent Maxwell equations in a homogeneous medium (for instance, vacuum), set in a *bounded* domain *Dom*, written as two second-order wave equations (see Eqs. (1.128)-(1.129)). Assuming that there is no charge, both electromagnetic fields are divergence-free. The wave equations for each of the fields being of the same nature, we will consider only one of them, for instance,

$$\frac{\partial^2 \boldsymbol{E}}{\partial t^2} + c^2\ \mathbf{curl}\,\mathbf{curl}\,\boldsymbol{E} = -\frac{1}{\varepsilon_0}\frac{\partial \boldsymbol{J}}{\partial t}\ ,$$
$$\operatorname{div}\boldsymbol{E} = 0\ ,$$

with the initial conditions

$$\boldsymbol{E}(0) = \boldsymbol{E}_0, \qquad \frac{\partial \boldsymbol{E}}{\partial t}(0) = \boldsymbol{E}_1\ .$$

Since the domain *Dom* is bounded, one has to add a boundary condition, such as the perfect conductor boundary condition (1.135). The problem to solve can be expressed as

$$\frac{d^2\boldsymbol{U}}{dt^2}(t) + A\,\boldsymbol{U}(t) = \boldsymbol{F}(t) \text{ for } t > 0, \quad \boldsymbol{U}(0) = \boldsymbol{U}_0,\ \frac{d\boldsymbol{U}}{dt}(0) = \boldsymbol{U}_1\,, \qquad (1.130)$$

where:

- $\boldsymbol{U}(t)$ is the unknown, here the electric field ;
- A is the operator acting on the solution, here c^2 **curl curl** ;
- $\boldsymbol{F}(t)$ is the right-hand side, here $-\varepsilon_0^{-1}\partial_t \boldsymbol{J}$;
- $\boldsymbol{U}_0, \boldsymbol{U}_1$ is the initial data.

The problem is set in the vector space of *divergence-free solutions with vanishing tangential components on the boundary*, the so-called domain of the operator A. It can be proven that the operator A is compact, self-adjoint and positive-definite, and that there exists an orthonormal basis of eigenmodes $(\boldsymbol{\mu}_k)_{k\geq 1}$ and a set of corresponding non-negative eigenvalues $(\lambda_k)_{k\geq 1}$ (counted with their multiplicity) such that $A\boldsymbol{\mu}_k = \lambda_k \boldsymbol{\mu}_k$ for all $k \geq 1$ (we refer the reader to Chapter 8 for details). Moreover, the multiplicities of all eigenvalues are finite, and furthermore, $\lim_{k\to+\infty} \lambda_k = +\infty$. The set $\{\lambda_k,\ k \geq 1\}$ is the spectrum of the operator A. Such modes correspond to the so-called free vibrations of the electric field. One can expand the solution $\boldsymbol{U}$ and the initial data on the basis:

$$\boldsymbol{U}(t) = \sum_{k=1}^{\infty} u_k(t)\, \boldsymbol{\mu}_k\,, \quad \boldsymbol{U}_0 = \sum_{k=1}^{\infty} u_0^k\, \boldsymbol{\mu}_k\,, \quad \boldsymbol{U}_1 = \sum_{k=1}^{\infty} u_1^k\, \boldsymbol{\mu}_k\,.$$

Solving the problem (1.130) mode by mode yields, thanks to the superposition principle,

$$\boldsymbol{U}(t) = \sum_{k=1}^{\infty} u_k(t)\boldsymbol{\mu}_k, \text{ with } u_k(t) = \frac{u_1^k}{\omega_k}\sin(\omega_k t) + u_0^k \cos(\omega_k t) + \frac{1}{\omega_k}\left(\int_0^t \sin(\omega_k(t-s))\, F_k(s)\, ds\right), \quad (1.131)$$

with $\omega_k = \sqrt{\lambda_k}$ for all k. As pointed out by the expression (1.131), the values ω_k play a particular role in the physical interpretation. Assume that the energy input to the system can be expressed by a right-hand side $\boldsymbol{F}(t)$ such as

$$\boldsymbol{F}(t) = f_k \cos(\omega t)\boldsymbol{\mu}_k \quad (1.132)$$

with a prescribed positive ω. This corresponds to the so-called sustained vibrations of the electric field, expressed here in the time-dependent case. Computing the mode-by-mode solution with this right-hand side, one finds that $u_k(t)$ is equal to

1. $\dfrac{f_k}{2\omega_k}\{\dfrac{1}{\omega-\omega_k} + \dfrac{1}{\omega+\omega_k}\}(\cos(\omega_k t) - \cos(\omega t))$ if $\omega \neq \omega_k$;
2. respectively $\dfrac{f_k}{2\omega} t \sin(\omega t)$ if $\omega = \omega_k$,.

In case 1, all terms in (1.131) appear with a bounded amplitude, the leading term being proportional to $f_k(\omega-\omega_k)^{-1}\omega_k^{-1}$ when $\omega \approx \omega_k$. If case 2 occurs, there exist one or several terms in (1.131), i.e., those that write

$(2\omega)^{-1} f_k t \sin(\omega t)$ for k such that $\omega_k = \omega$, which have an unbounded amplitude, equal to $(2\omega)^{-1} f_k t$. This is called a *resonance*. It can occur only when the excitation frequency ω is equal to one of the ω_k's. For this reason, the quantities $(\omega_k)_k$ are called resonance frequencies[16] of the system.

This result can also be interpreted in terms of energy. Indeed, taking the dot product of (1.130-left) by $\boldsymbol{U}'$ and integrating over the domain Dom yields

$$(\frac{d^2\boldsymbol{U}}{dt^2}(t)|\frac{d\boldsymbol{U}}{dt}(t)) + (A\,\boldsymbol{U}(t)|\frac{d\boldsymbol{U}}{dt}(t)) = (\boldsymbol{F}(t)|\frac{d\boldsymbol{U}}{dt}(t)) \text{ for } t > 0\,.$$

It can be written as

$$\frac{d}{dt}\left\{\frac{1}{2}\|\frac{d\boldsymbol{U}}{dt}(t)\|^2 + \frac{1}{2}(A\,\boldsymbol{U}(t)|\boldsymbol{U}(t))\right\} = (\boldsymbol{F}(t)|\frac{d\boldsymbol{U}}{dt}(t)) \text{ for } t > 0.$$

Above,

$$(\boldsymbol{U}(t)|\boldsymbol{V}(t)) = \int_{Dom} \boldsymbol{U}(t,\boldsymbol{x})\cdot\boldsymbol{V}(t,\boldsymbol{x})\,d\boldsymbol{x}, \quad \|\boldsymbol{U}(t)\| = \left(\int_{Dom} |\boldsymbol{U}(t,\boldsymbol{x})|^2 d\boldsymbol{x}\right)^{1/2}.$$

The first term between brackets represents a kinetic energy, the second one represents a potential energy and the right-hand side represents the power brought to the system at a given time t. Integrating this equation over time leads to the energy conservation equation

$$\frac{1}{2}\|\frac{d\boldsymbol{U}}{dt}(t)\|^2 + \frac{1}{2}(A\,\boldsymbol{U}(t)|\boldsymbol{U}(t)) = \int_0^t (\boldsymbol{F}(s)|\frac{d\boldsymbol{U}}{dt}(s))ds + \frac{1}{2}(\|\boldsymbol{U}_1\|^2 + (A\boldsymbol{U}_0|\boldsymbol{U}_0))\,,$$

in which the energy brought to the system is $\displaystyle\int_0^t (\boldsymbol{F}(s)|\boldsymbol{U}'(s))ds$. Assuming again that $\boldsymbol{F}$ is of the form (1.132), the energy has a bounded amplitude as soon as $\omega \notin \{\omega_k,\ k \geq 1\}$. Contrastingly, this amplitude is unbounded if $\omega = \omega_k$. Physically, the resonance corresponds to the excitation of one eigenmode of the system, creating an unbounded increase of its internal energy.

Let us now build a solution to the time-harmonic problem, cf. §1.2.1. We introduce a right-hand side $\boldsymbol{F}$ with harmonic time-dependence $\exp(-\imath\omega t)$ ($\omega > 0$), that is, $\boldsymbol{F}(t,\boldsymbol{x}) = \Re(\boldsymbol{f}(\boldsymbol{x})\exp(-\imath\omega t))$, with a complex-valued $\boldsymbol{f}$. Let us consider that the solution $\boldsymbol{U}$ to Eq. (1.130-left) adopts the same time-harmonic dependence for t large enough, so that $\boldsymbol{U}(t,\boldsymbol{x}) = \Re(\boldsymbol{u}(\boldsymbol{x})\exp(-\imath\omega t))$, with a complex-valued $\boldsymbol{u}$. Plugging the expression of $\boldsymbol{U}$ into Eq. (1.130-left) and using, as above, expansions of $\boldsymbol{u}$ and $\boldsymbol{f}$ yields, with obvious notations,

$$\Re\left(\sum_k (\omega_k^2 - \omega^2)\, u_k\, \boldsymbol{\mu}_k\, \exp(-\imath\omega t)\right) = \Re\left(\sum_k f_k\, \boldsymbol{\mu}_k\, \exp(-\imath\omega t)\right). \quad (1.133)$$

[16] More precisely, ω is a pulsation and the corresponding frequency is $\omega/(2\pi)$.

Now, Eq. (1.133) is equivalent to $(\omega_k^2 - \omega^2)\, u_k = f_k$ for all k. Assume that ω is equal to some ω_k. In order for a solution to exist, one must have $f_k = 0$ for all the corresponding indices k (such that $\omega = \omega_k$). It follows that no resonance can occur in the time-harmonic case. From a mathematical point of view, one can use the Fredholm alternative (cf. Chapter 4 for a more detailed discussion).

1.6 Boundary conditions and radiation conditions

In order to close Maxwell's equations when the domain is a strict subset of $\mathbb{R}^3$, one must provide conditions, in addition to the differential Maxwell equations (1.6-1.9). These conditions are usually imposed on the boundary of the domain, and they are called the *boundary conditions*. Also, when the domain is unbounded in at least one direction, it is interesting, from a computational point of view, to bound it. The computational domain thus corresponds to a truncation of the original domain. This can be achieved via the introduction of an artificial boundary, and an *ad hoc absorbing boundary condition* is imposed on this boundary, so that the electromagnetic waves can leave the computational domain without (significant) reflections. Another possibility is to introduce – not a boundary plus a boundary condition – but a *thin, dissipative layer*, in which the waves can propagate while being damped at the same time. This technique is called the *perfectly matched layers*. In other respects, when one focuses on the time-harmonic Maxwell equations (1.47-1.50), one must add a condition at infinity, which permits us to discriminate incoming and outgoing waves: this condition is called a *radiation condition*. Physically, it prevents energy inputs from infinity. Mathematically, it allows one to prove uniqueness results.

1.6.1 Boundary conditions

As we remarked at the beginning of this section, the differential Maxwell equations are insufficient to characterize the fields in a strict subset of $\mathbb{R}^3$. On the other hand, the integral Maxwell equations yield four interface conditions, respectively described by Eq. (1.11) and Eq. (1.12). How can these conditions be used? Let us call $\mathcal{O}$ the domain of interest, and $\partial\mathcal{O}$ its boundary. Note that $\partial\mathcal{O}$ can alternatively be seen as the interface between $\mathcal{O}$ and $\mathbb{R}^3 \setminus \overline{\mathcal{O}}$, so the electromagnetic fields fulfill conditions (1.11-1.12) on $\partial\mathcal{O}$. In addition, the behavior of the electromagnetic fields is known in $\mathbb{R}^3 \setminus \overline{\mathcal{O}}$ (otherwise, we would have to compute them!) or, more realistically, in an exterior domain $\mathcal{O}'$ included in $\mathbb{R}^3 \setminus \overline{\mathcal{O}}$, such that $\overline{\mathcal{O}} \cap \overline{\mathcal{O}}' = \partial\mathcal{O}$. As a consequence, one can gather some useful information as to the behavior of the fields in $\mathcal{O}$, on the boundary $\partial\mathcal{O}$.

For instance, let us assume now that the domain $\mathcal{O}$ is bounded, or partially bounded (i.e., along one direction, like the "pipe" in Figure 1.1), and that it

is encased (at least locally) in a perfect conductor. Then, as we saw in §1.1,

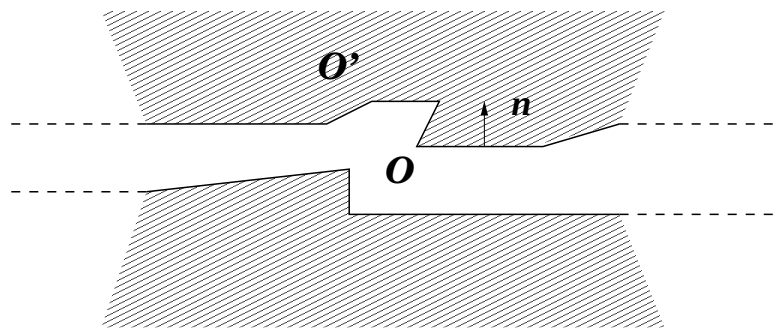

Fig. 1.1. "Pipe" domain.

the fields vanish outside $\mathcal{O}$ (cf. our discussion on skin depth and on the notion of perfect conductor). From condition (1.11 right), we infer that

$$\boldsymbol{B} \cdot \boldsymbol{n} = 0 \text{ on } \partial\mathcal{O}\,, \tag{1.134}$$

with $\boldsymbol{n}$ the unit outward normal vector to $\partial\mathcal{O}$, with the convention that outward goes from $\mathcal{O}$ to $\mathcal{O}'$. Likewise, from condition (1.12 left), we get

$$\boldsymbol{E} \times \boldsymbol{n} = 0 \text{ on } \partial\mathcal{O}\,. \tag{1.135}$$

The conclusion is that the normal component $B_n = \boldsymbol{B}\cdot\boldsymbol{n}_{|\partial\mathcal{O}}$ (respectively tangential components $\boldsymbol{E}_\top = \boldsymbol{n} \times (\boldsymbol{E} \times \boldsymbol{n})_{|\partial\mathcal{O}}$) of $\boldsymbol{B}$ (respectively $\boldsymbol{E}$) uniformly vanish on $\partial\mathcal{O}$: we call these conditions[17] the *perfect conductor boundary conditions*.

[17] One may also use the interface conditions to describe electromagnetic fields globally in $\mathbb{R}^3$: this is an integral representation. More precisely [168, §5.5], consider that $\mathbb{R}^3$ is split into two media $\mathtt{M}^+$ and $\mathtt{M}^-$, one of them being bounded, and let Σ be the interface between the two media. If one is interested in the electromagnetic fields that are governed by the homogeneous time-harmonic equations in $\mathtt{M}^+$ and $\mathtt{M}^-$, then, assuming that the jump $\boldsymbol{j}_\Sigma = -[\boldsymbol{H} \times \boldsymbol{n}_\Sigma]_\Sigma$ (condition (1.12 right)) is known, one can use integral representation formulas for the values of $\boldsymbol{E}(\boldsymbol{x})$ and $\boldsymbol{H}(\boldsymbol{x})$, for all $\boldsymbol{x} \in \mathbb{R}^3 \setminus \Sigma$. The integrals are taken over Σ and depend only on $\boldsymbol{j}_\Sigma$. In the same spirit, one can represent the (different) values of $\boldsymbol{E}^\pm(\boldsymbol{x}_\Sigma)$ and $\boldsymbol{H}^\pm(\boldsymbol{x}_\Sigma)$ for all $\boldsymbol{x}_\Sigma \in \Sigma$. Within this framework, one may generalize these results in the presence of magnetic polarization by assuming that the magnetic current on Σ, $\boldsymbol{m}_\Sigma = [\boldsymbol{E} \times \boldsymbol{n}_\Sigma]_\Sigma$, is also different from 0. In this case, one ends up with integral representation formulas of $\boldsymbol{E}$ and $\boldsymbol{H}$, with integrals over Σ that depend on $\boldsymbol{j}_\Sigma$ and $\boldsymbol{m}_\Sigma$. In the same manner, one may use the jump relation $\sigma_\Sigma = [\boldsymbol{D}\cdot\boldsymbol{n}_\Sigma]_\Sigma$ (1.11 left) to solve a diffraction problem expressed as a scalar Helmholtz equation, assuming σ_Σ is known, where the unknown is the scalar electric potential.

From the physical point of view, these conditions are macroscopic, since they result from the idealization of quantities defined on surfaces. On the other hand, from a mathematical point of view, these conditions are sufficient to ensure the uniqueness of the solution, in the absence of topological considerations. As we shall see in Chapter 5, condition (1.134) can be rigorously inferred from condition (1.135), whereas the reciprocal assertion is not valid.

From the point of view of wave propagation, the perfect conductor boundary condition can be viewed as a reflection condition. Indeed, since the electromagnetic fields uniformly vanish inside the perfect conductor, one can say that the boundary *completely* reflects any impinging plane wave. As a consequence, the reflection coefficient, which is equal to the ratio of amplitudes between the reflected and incident waves, has a unit value. Also, in terms of energy, no energy is transmitted to the exterior domain $\mathcal{O}'$. In other words, the energy flux through the boundary is equal to zero, and the energy remains constant in the domain $\mathcal{O}$ (in the absence of sources).
However, there also exist media that are more or less dissipative. This occurs, for instance, when the exterior medium $\mathcal{O}'$ is a conductor (but not a perfect one). The fields do not vanish inside $\mathcal{O}'$, so a wave originating from the domain $\mathcal{O}$ penetrates into the exterior domain $\mathcal{O}'$. More precisely, if we consider an impinging plane wave, it should penetrate – at least partially – into $\mathcal{O}'$, where it is damped. In the special case when $\partial\mathcal{O}$ is a plane and if the velocity of propagation of the plane wave is equal to $\boldsymbol{c} = 1/\sqrt{\varepsilon\mu}\,\boldsymbol{n}$, one finds by direct computations that it holds that

$$\boldsymbol{E} \times \boldsymbol{n} + \sqrt{\frac{\mu}{\varepsilon}}\boldsymbol{n} \times (\boldsymbol{H} \times \boldsymbol{n}) = 0\,.$$

So, to allow a plane wave to penetrate into $\mathcal{O}'$, one usually introduces a boundary condition, called the *impedance boundary condition*, which is written as

$$\boldsymbol{E} \times \boldsymbol{n} + Z\boldsymbol{n} \times (\boldsymbol{H} \times \boldsymbol{n}) = 0 \text{ on } \partial\mathcal{O}\,. \tag{1.136}$$

In its simplest form, the impedance Z is a positive number, which is characteristic of the medium. The obvious example is $Z = \sqrt{\mu/\varepsilon}$, which allows the plane wave with velocity $\boldsymbol{c} = 1/\sqrt{\varepsilon\mu}\,\boldsymbol{n}$ to leave the domain $\mathcal{O}$ without being reflected (when $\partial\mathcal{O}$ is a plane). More generally, Z is an operator (local in space), and the generalized impedance boundary condition is understood as $\boldsymbol{E}\times\boldsymbol{n}_{|\partial\mathcal{O}}+Z(\boldsymbol{n}\times(\boldsymbol{H}\times\boldsymbol{n})_{|\partial\mathcal{O}}) = 0$. In terms of energy, this condition allows the electromagnetic energy to decrease in the domain. Note that condition (1.136) is usually considered for time-harmonic fields (see [28] for an example of time-dependent fields), and in this instance, Z can be a function of the pulsation ω.

In most cases, these boundary conditions are not sufficient to model problems originating from physical situations efficiently. Let us consider more specifically the time-dependent Maxwell equations in a domain $\mathcal{O}$. Obviously, if the

domain $\mathcal{O}$ is not bounded, it has to be "numerically adjusted" to perform numerical computations. Note that this difficulty occurs for exterior problems (diffraction, etc.) as well as for interior problems (waveguides, etc.) (see Figures 1.2 (left) and 1.3 (left)). Let the *computational domain* Ω be equal, for

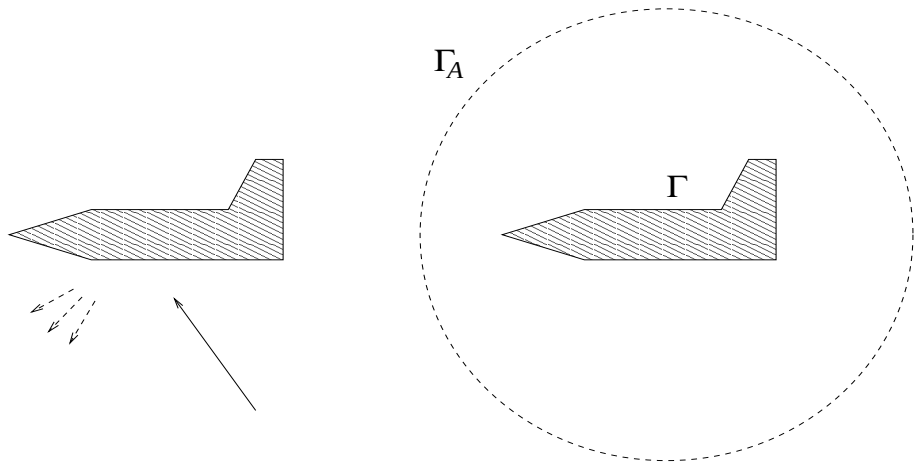

Fig. 1.2. Adjustment of a sample diffraction problem.

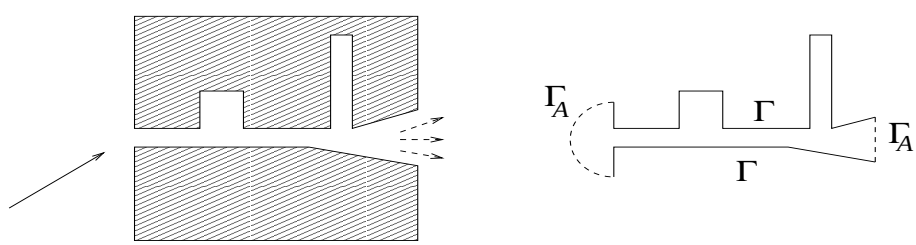

Fig. 1.3. Adjustment of a sample interior problem.

instance, to[18] $\mathcal{O} \cap B(O, R)$, with a suitable radius R. Then, the boundary of the computational domain $\partial\Omega$ can be split into two parts:

- a "physical" part, which is included in $\partial\mathcal{O}$: $\Gamma = \partial\Omega \cap \partial\mathcal{O}$.
- the remainder, Γ_A, which is purely "artificial".

For a diffraction problem on a bounded object, the radius R is chosen so that Γ_A *does not intersect* the "physical" boundary $\partial\mathcal{O}$ (see Figure 1.2 (right)). In

[18] Instead of $B(O, R)$, one can choose any reasonable volume in which the computations ought to be performed: a cube, as in Figure 1.3 (right, rightmost Γ_A), etc.

other words, there holds $\partial\Gamma \cap \partial\Gamma_A = \emptyset$, with $\Gamma = \partial\mathcal{O}$, $\Gamma_A = \partial B(O,R)$. So, for numerical purposes, one handles a truncated exterior problem.
Contrastingly, for an interior problem, R is usually chosen in such a way that Γ_A intersects the "physical" boundary: $\partial\Gamma \cap \partial\Gamma_A \neq \emptyset$ (see Figure 1.3 (right)). In the latter case and as a rule of thumb, one must be careful to avoid artificial boundaries Γ_A that intersect $\partial\mathcal{O}$ at positions where the electromagnetic fields can be locally "intense", such as the neighborhood of reentrant corners and/or edges of $\partial\mathcal{O}$. For numerical purposes, one handles a truncated interior problem.

On Γ, one imposes the boundary conditions that model the behavior of the exterior medium, as previously. On the artificial boundary Γ_A, a boundary condition is also required. Let us go back to a plane wave with a velocity of propagation $\boldsymbol{c} = c\,\boldsymbol{d}$: when $\boldsymbol{d}\cdot\boldsymbol{n} > 0$, one says that the wave is *outgoing*, whereas it is said to be *incoming* when $\boldsymbol{d}\cdot\boldsymbol{n} < 0$. Physically, one has to model the following behavior: outgoing electromagnetic waves should leave the computational domain Ω freely *without* being reflected at this boundary. Or, equivalently, outgoing waves are *absorbed* at the artificial boundary, and the corresponding condition is called an *absorbing* boundary condition.

Let $(\boldsymbol{E}^{ex}, \boldsymbol{B}^{ex})$ denote the (exact) solution to the problem set in $\mathcal{O}$, and let $(\boldsymbol{E}, \boldsymbol{B})$ be the (possibly approximate) solution to the problem set in Ω. Here, the term "problem" refers to Maxwell's equations in the domain, plus the boundary conditions on the boundary of the aforementioned domain.

It is possible to construct an exact absorbing boundary condition, which is usually called the *transparent boundary condition*. It can be written as $\boldsymbol{E}^{ex} \times \boldsymbol{n}_{|\Gamma_A} + T(\boldsymbol{n} \times (\boldsymbol{B}^{ex} \times \boldsymbol{n})_{|\Gamma_A}) = 0$, where T is a pseudo-differential operator (note the similarities with the generalized impedance boundary condition). The action of the operator T can be expressed in two equivalent ways. Either T is considered as a transfer operator that relates the trace of the tangential trace of the magnetic induction to its electric counterpart, and its action is written as an (infinite) expansion in spherical harmonics. Or, an integral representation of the fields can be used (in Ω and in $\mathbb{R}^3 \setminus B(O,R)$), which is determined by the values of the tangential traces of both fields on Γ_A.
Mathematically, if one imposes the transparent boundary condition on Γ_A, it can be proven that the *restriction* of the exact fields $(\boldsymbol{E}^{ex}, \boldsymbol{B}^{ex})$ to Ω is equal to $(\boldsymbol{E}, \boldsymbol{B})$. Or, the other way around, one can build an *extension* of the fields $(\boldsymbol{E}, \boldsymbol{B})$ to $\mathcal{O}$ that coincides with the exact solution (see, for instance, [129]).
However, the transparent condition is non-local both in space and time: for practical implementations, it is impossible to use the operator Texactly as it is... So, for numerical purposes, one can choose, for instance, truncated (finite) expansions, when the action of T is expressed via a transfer operator (see below); or Boundary Element Methods that allow one to approximate

integral representations.

Alternatively, one can choose to devise approximate conditions: the absorbing boundary conditions (referred to as ABC or ABCs from now on). Within the same framework, it is often required to model incoming waves from infinity. The incoming waves should be able to enter the domain Ω. The parameters describing these incoming waves can be prescribed by given functions (denoted $\boldsymbol{e}^\star$ and $\boldsymbol{b}^\star$ in the following), defined on the artificial boundary Γ_A. A set of ABCs for Maxwell's equations can be written as

$$(\boldsymbol{E} - c\boldsymbol{B} \times \boldsymbol{n}) \times \boldsymbol{n} = \boldsymbol{e}^\star \times \boldsymbol{n} \text{ on } \Gamma_A, \quad \boldsymbol{e}^\star \text{ data}, \tag{1.137}$$

or, in a similar way,

$$(c\boldsymbol{B} + \boldsymbol{E} \times \boldsymbol{n}) \times \boldsymbol{n} = c\,\boldsymbol{b}^\star \times \boldsymbol{n} \text{ on } \Gamma_A, \quad \boldsymbol{b}^\star \text{ data}. \tag{1.138}$$

These conditions are obtained by locally approximating the boundary Γ_A by its tangent plane. Moreover, an outgoing plane wave, which propagates *normally* to the boundary, is not reflected. In that case, we have to choose $\boldsymbol{e}^\star = 0$ or $\boldsymbol{b}^\star = 0$. On the other hand, when $\boldsymbol{e}^\star \neq 0$ or $\boldsymbol{b}^\star \neq 0$, conditions (1.137-1.138) enable an incoming plane wave that propagates *normally* to the boundary to enter the domain freely. The conditions (1.137-1.138) are known as the *Silver–Müller ABCs* [166]. When $\boldsymbol{e}^\star = 0$ or $\boldsymbol{b}^\star = 0$, they are said to be *homogeneous*.

Note that since we are considering boundary conditions that are an approximation of the exact transparent boundary condition, it follows that $(\boldsymbol{E}, \boldsymbol{B})$ is different from the restriction of the exact fields $(\boldsymbol{E}^{ex}, \boldsymbol{B}^{ex})$ to Ω.

If one differentiates Eq. (1.138) with respect to time and uses the trace of Faraday's law on Γ_A, one finds another expression of the *Silver–Müller boundary condition* that involves the electric field alone

$$\frac{\partial}{\partial t}[(\boldsymbol{E} \times \boldsymbol{n}) \times \boldsymbol{n}] - c(\mathbf{curl}\,\boldsymbol{E}) \times \boldsymbol{n} = c\,\frac{\partial \boldsymbol{b}^\star}{\partial t} \times \boldsymbol{n} \text{ on } \Gamma_A\,. \tag{1.139}$$

Or, as we already mentioned, one can choose to approximate the transparent boundary condition directly. This can be achieved when the artificial boundary is "smooth", by performing either a Taylor expansion or a rational (Padé) expansion of the operator T, in terms of a small parameter: in the high-frequency limit, the (small) parameter is equal to the angle of incidence $\widehat{(\boldsymbol{d}, \boldsymbol{n})}$ of the waves on Γ_A. Keeping only the zero-order term, one recovers Eq. (1.138) with $\boldsymbol{b}^\star = 0$. Keeping the zero- and first-order terms, one tailors *a priori* a new ABC.[19] However, in the special case when the artificial boundary is a sphere

[19] For instance (see [189]), if the artificial boundary Γ_A is a cylinder of radius R and axis Oz, one gets

$$\left\{\frac{\partial}{\partial t} + \frac{c}{2R}\right\}[(\boldsymbol{E} \times \boldsymbol{n}) \times \boldsymbol{n}] + \frac{c}{R}\,E_\theta \boldsymbol{e}_\theta - c(\mathbf{curl}\,\boldsymbol{E}) \times \boldsymbol{n} = 0 \text{ on } \Gamma_A\,,$$

$\Gamma_A = \partial B(O,R)$, the "new" condition still coincides with (1.138). Hence, the initial Silver–Müller ABCs, obtained by merging Γ_A with its tangent plane, are still satisfactory up to the first order in this special geometry.

The precision of an ABC can be measured with the help of plane wave analysis: any plane wave impinging on Γ_A is partially reflected (and partially refracted). The reflection coefficient (the ratio of amplitudes between the reflected and incident waves) depends on the angle of incidence $\theta = \widehat{(\boldsymbol{d},\boldsymbol{n})} \in]-\pi/2,\pi/2[$. When the reflection coefficient behaves like

$$\left(\frac{1-\cos\theta}{1+\cos\theta}\right)^{\alpha} = O(\theta^{2\alpha}),$$

one says that the ABC is of order α. Using this scale and assuming that Γ_A is a plane, one finds that the Silver–Müller condition (1.139) is of order 1, whereas the perfect conductor condition is, by construction, of order zero. One can also build ABCs of higher order. The following condition has been proposed in [148]:

$$\left(\frac{\partial}{\partial t} + c\,\frac{\partial}{\partial \boldsymbol{n}}\right)[(\boldsymbol{E}\times\boldsymbol{n})\times\boldsymbol{n}] + \frac{c}{2}\,\mathbf{grad}_{\Gamma}(\boldsymbol{E}\cdot\boldsymbol{n}) + \frac{c^2}{2}\,\mathbf{curl}_{\Gamma}(\boldsymbol{B}\cdot\boldsymbol{n}) = 0, \quad (1.140)$$

or, alternatively,

$$\left(\frac{\partial}{\partial t} + c\,\frac{\partial}{\partial \boldsymbol{n}}\right)[(\boldsymbol{B}\times\boldsymbol{n})\times\boldsymbol{n}] + \frac{c}{2}\,\mathbf{grad}_{\Gamma}(\boldsymbol{B}\cdot\boldsymbol{n}) - \frac{1}{2}\,\mathbf{curl}_{\Gamma}(\boldsymbol{E}\cdot\boldsymbol{n}) = 0, \quad (1.141)$$

where $\mathbf{grad}_{\Gamma}$ is the surface gradient, or tangential gradient, operator, and $\mathbf{curl}_{\Gamma}$ is the surface curl, or tangential curl, operator. Assuming that Γ_A is a plane, it is proven that the condition (1.140) or (1.141) is of order 2.

Note that the ABCs are not equivalent to one another. In other words, two different conditions yield two different sets of electromagnetic fields.

As we remarked earlier, approximate conditions such as the Silver–Müller ABCs have been developed as an alternate choice to the numerical approximation of the transparent boundary conditions. In particular, condition (1.139), used in conjunction with the differential Maxwell equations (and another condition on Γ), leads to a well-posed problem [189]. In addition, the Silver–Müller boundary condition is sufficiently accurate for most interior problems, and it is straightforward to implement numerically [23]. Contrastingly, for exterior problems, the use of higher-order approximations is recommended [109]. A possible drawback of the higher-order ABCs is that they can lead to problems that are not well-posed. Finally, we note that these instances of ABCs

with $\boldsymbol{E} = E_r\boldsymbol{e}_r + E_\theta\boldsymbol{e}_\theta + E_z\boldsymbol{e}_z$ in cylindrical coordinates.

can be used in the time-harmonic regime.

The last technique we review is credited to Bérenger [41, 42]. To adjust the domain, one adds not an artificial boundary, but one, or a set of, *artificial layers*, made of artificial media. These artificial layers, and the media they are made of, exhibit special features:

(i) Interfaces between the computational domain and an artificial layer or between two artificial layers are plane.
(ii) Electromagnetic plane waves that propagate in the artificial media are attenuated: these media are dissipative.
(iii) At the interface between the layers and the computational domain, plane waves are not reflected (whatever the angle of incidence).
(iv) At the interface between two layers, plane waves are not reflected (whatever the angle of incidence).

Basically, one first designs several types of layer. They are labeled L_x, L_y, L_z, depending on the chosen – constant (cf. (i)) – direction of the normal vector ($\boldsymbol{n}_I = \boldsymbol{e}_x, \boldsymbol{e}_y, \boldsymbol{e}_z$) to the interface between the computational domain and each of the surrounding layers (see Figure 1.4 (left)). To fulfill (ii-iii), the conductivities in the artificial media have to be adjusted carefully. Indeed, in addition to the conductivity σ, one also needs to introduce a *magnetic conductivity* $\sigma^\star$ such that in the artificial medium, Faraday's law reads as $\partial_t \boldsymbol{B}^{art} + \mathbf{curl}\, \boldsymbol{E}^{art} = \sigma^\star \boldsymbol{H}^{art}$. Furthermore, one has to split the magnetic induction into two parts, and then, one has to duplicate Faraday's law on those two parts. By doing so,[20] one introduces additional degrees of freedom, so that the problem at hand is solvable.

Second, to reconnect two different layers, for instance, L_x and L_y, one in-

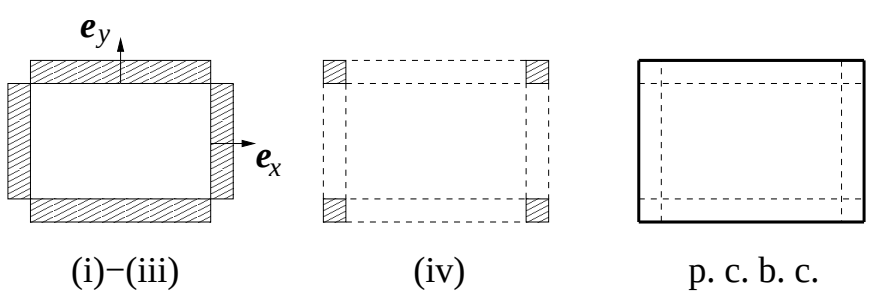

Fig. 1.4. Basic geometrical steps for the construction of PMLs.

troduces another artificial layer L_{xy}, so that (iv) is fulfilled at the interfaces $\partial L_x \cap \partial L_{xy}$ and $\partial L_y \cap \partial L_{xy}$ (see Figure 1.4 (center)) through the use of similar

[20] Manipulating Maxwell's equations thusly is certainly admissible, since one is dealing with artificial media, in which the electromagnetic fields are artifacts...

techniques.
Note that there always exists a solution to the previous problems: in other words, one can always choose the conductivities in the various artificial media so that (ii-iv) hold.

Finally, this set of artificial layers is surrounded by a boundary on which one imposes perfect conductor boundary conditions (see Figure 1.4 (right)). The various artificial layers are called *perfectly matched layers* (or PMLs, for short). Unsplit versions of the PMLs (based on stretched coordinates in the artificial media, see [76, 176]) have been developed. In other words, the magnetic induction is not split anymore in the artificial media, which reduces the total number of unknowns there. The same result can be achieved by the use of anisotropic artificial media (as proposed in [183]), resulting in the so-called *uniaxial PML* (UPML).

From an algorithmic or computational point of view, outgoing plane waves can leave the computational domain freely. Then, they are damped in the PMLs, before being reflected by the perfect conductor boundary conditions. On their way back, they are damped once more before entering the computational domain freely. However, because of the dissipation in the artificial media, the energy of the plane waves that enter the computational domain after traveling in the PMLs is negligible. This process leads to numerical implementations that are extremely efficient in practice. From a mathematical point of view, the use of either the set of original PMLs of Bérenger or of unsplit versions leads to problems that are (conditionally) well-posed mathematically (see [37, 36, 147]).

1.6.2 Radiation conditions

So far, we have focused mostly on the time-dependent Maxwell equations. Here, we deal with the time-harmonic case as in §1.2, in a homogeneous medium. Let $\omega > 0$ be the pulsation.
Let us assume for simplicity that the charge density ϱ is equal to 0, so that the current density is divergence-free. Under these conditions, each field is solving a fixed frequency problem, which can be written in the manner of the Helmholtz-like equations (1.56-1.57),

$$\begin{cases} \mathbf{curl}\ \mathbf{curl}\ \boldsymbol{e} - \lambda \boldsymbol{e} = \imath\omega\mu_0 \boldsymbol{j} \\ \mathbf{curl}\ \mathbf{curl}\ \boldsymbol{b} - \lambda \boldsymbol{b} = \mu_0\, \mathbf{curl}\, \boldsymbol{j} \end{cases} \quad \text{with } \lambda = \omega^2/c^2. \tag{1.142}$$

As we already pointed out, this equation is strongly connected to the scalar Helmholtz equation (1.63), for which it is well known that the uniqueness of the solution requires a so-called *radiation condition* at infinity.

Now, as far as radiation conditions are concerned, they are generally associated with diffraction problems (see Figure 1.2). In others words, we are

concerned with waves coming from infinity that are impinging on an obstacle K: we are interested in solving the problem in $\mathcal{O} = \mathbb{R}^3 \setminus \overline{K}$. As we saw before, there may be (partial) absorption, as well as scattering by the obstacle, which leads to different kinds of boundary condition on this obstacle.
In practice, the computational problem is usually set within a bounded domain, for instance, $B(O,R) \setminus \overline{K}$. An *ad hoc* boundary condition is chosen on $\partial B(O,R)$, together with the companion numerical approximation of this boundary condition (see the previous discussion on transparent boundary conditions and/or ABCs).
Then, supplementary conditions, which characterize the behavior of the solution at infinity, are required. Denoting by (r,θ,ϕ) the spherical coordinates with associated vector basis $(\boldsymbol{e}_r, \boldsymbol{e}_\theta, \boldsymbol{e}_\phi)$, we seek a condition that depends on r only, so that it can be applied on the exterior boundary $\partial B(O,R)$. At first glance, it seems that imposing that the solution decrease like r^{-1} at infinity is sufficient. Indeed, this condition is similar to the one that is required for the well-posedness of the scalar Poisson equation $\Delta w = f$ in an exterior domain: it can be easily understood as a requirement for avoiding a situation in which the total energy $\int_{\mathcal{O}} |w|^2 \, d\boldsymbol{x}$ would be unbounded. However, unlike the case of the Poisson equation, this condition is not sufficient to ensure *uniqueness* of the solution to the Helmholtz equation. To illustrate this point, let us introduce radial solutions to the scalar Helmholtz equation $\Delta w + \lambda w = 0$ set in $\mathbb{R}^3$. In other words, since we are studying uniqueness, Eq. (1.63) is solved in $\mathbb{R}^3$ with a zero right-hand side. Namely, we look for solutions of the form $w(\boldsymbol{x}) = \zeta(r)$. Under this assumption, Eq. (1.63) becomes, for $r > 0$,

$$\frac{1}{r^2}\frac{d}{dr}(r^2\frac{d\zeta}{dr}) + k^2\zeta = 0\,,$$

with $k = \sqrt{\lambda} = \omega/c$. The general solution to the previous equation is

$$\zeta(r) = C_+\zeta_+(r) + C_-\zeta_-(r)\,, \text{ with } C_\pm \in \mathbb{C},\ \zeta_\pm(r) = \frac{1}{r}\exp(\pm\imath kr). \quad (1.143)$$

Two families of solutions coexist. One with the + sign in the exponent, corresponding to an outgoing wave, the second with the − sign, associated with an incoming wave.[21] Hence, the uniqueness of the solution (up to a multiplicative constant) can be recovered by imposing a radiation condition, that is, a condition that describes the behavior of the solution at infinity, depending on whether one wants to select an outgoing wave or an incoming wave. As a matter of fact, from Eq. (1.143), we find

[21] Indeed, the unit outward normal vector to $\partial B(O,R)$ is $\boldsymbol{n} = \boldsymbol{e}_r$. Moreover, since $\boldsymbol{x} = r\boldsymbol{e}_r$ on $\partial B(O,R)$, for an outgoing plane wave that propagates normally to $\partial B(O,R)$ ($\boldsymbol{k}_{out} = k\boldsymbol{e}_r$), one finds $\boldsymbol{k}_{out}\cdot\boldsymbol{x} = kr$. Respectively, for an incoming plane wave that propagates normally to $\partial B(O,R)$ ($\boldsymbol{k}_{in} = -k\boldsymbol{e}_r$), $\boldsymbol{k}_{in}\cdot\boldsymbol{x} = -kr$.

$$\begin{cases} \zeta_+'(r) + \imath k\zeta_+(r) \approx \dfrac{2\imath k}{r}\exp(\imath kr), \quad \zeta_+'(r) - \imath k\zeta_+(r) = -\dfrac{1}{r^2}\exp(\imath kr), \\ \zeta_-'(r) + \imath k\zeta_-(r) = -\dfrac{1}{r^2}\exp(-\imath kr), \; \zeta_-'(r) - \imath k\zeta_-(r) \approx -\dfrac{2\imath k}{r}\exp(-\imath kr) \end{cases}.$$

This leads to the following radiation conditions, whose names correspond to those given for the scalar Helmholtz equation:

1. The *outgoing Sommerfeld condition* (imposes $C_- = 0$ in Eq. (1.143))

$$\frac{\partial w}{\partial r} - \imath kw = O(\frac{1}{r^2})\,.$$

2. The *incoming Sommerfeld condition* (imposes $C_+ = 0$ in Eq. (1.143))

$$\frac{\partial w}{\partial r} + \imath kw = O(\frac{1}{r^2})\,.$$

Both instances are necessary and sufficient conditions to ensure uniqueness of the solution to the scalar Helmholtz equation.

Remark 1.6.1 *To express the general solution to the scalar Helmholtz equation, one uses expansions expressed in spherical coordinates as*

$$\zeta(r,\theta,\phi) = \frac{\exp(-\imath kr)}{r}\sum_0^\infty \frac{F_n(\theta,\phi)}{r^n}\,.$$

This expansion is due to [25], [207] (see also [168]).

Let us consider the scalar, time-dependent, wave equation (in time-space $\mathbb{R}\times\mathbb{R}^3$)

$$\frac{\partial^2 w}{\partial t^2} - c^2\Delta w = 0\,.$$

One finds, assuming that the solution is radial in space – $w(t,\boldsymbol{x}) = \varphi(t,r)$ –

$$\frac{\partial^2\varphi}{\partial t^2} - \frac{c^2}{r^2}\frac{\partial}{\partial r}\left(r^2\frac{\partial\varphi}{\partial r}\right) = 0\,,\ \text{for } r>0\,.$$

This can be written equivalently as

$$(\frac{\partial}{\partial t} + c\frac{\partial}{\partial r})(\frac{\partial}{\partial t} - c\frac{\partial}{\partial r})(r\varphi) = 0\,,\ \text{for } r>0\,.$$

Now, solutions to $(\partial_t \pm c\partial_r)(r\varphi) = 0$ write $r\varphi = f(r\mp ct)$, so that $r\varphi = f_{out}(r-ct) + f_{inc}(r+ct)$.
To see that $f_{out}(r-ct)$ (respectively $f_{inc}(r+ct)$) actually corresponds to an outgoing wave (respectively an incoming wave), let us go back to the time-harmonic regime.
Assuming, in addition, a time-harmonic dependence of these solutions like $\varphi(t,r) = \Re(\zeta(r)\exp(-\imath\omega t))$, we have

$$(-\imath\omega + c\frac{\partial}{\partial r})(-\imath\omega - c\frac{\partial}{\partial r})(r\zeta) = 0\,,\ \text{for } r > 0\,.$$

This is equivalent in turn to $\partial_r(r\zeta) = +\imath kr\zeta$ or $\partial_r(r\zeta) = -\imath kr\zeta$ for $r > 0$, so that according to Eq. (1.143), ζ coincides with the solution obtained there. Moreover, we observe that $(\partial_t + c\partial_r)(r\varphi) = 0$ in the time-dependent regime corresponds to $\partial_r(r\zeta) = +\imath kr\zeta$ in the time-harmonic regime. We conclude by identification that

$$f_{out}(r - ct) = \Re(C_+\zeta_+(r)\exp(-\imath\omega t))$$

corresponds to an outgoing wave. In the same manner,

$$f_{inc}(r + ct) = \Re(C_-\zeta_-(r)\exp(-\imath\omega t))$$

corresponds to an incoming wave, as advertised above.

Denoting by $\boldsymbol{u}$ a radial solution to the time-harmonic Maxwell equations (1.142) with a zero right-hand side, one finds that two families of solutions coexist, in the form of an incoming part (denoted by $\boldsymbol{u}_-$) and an outgoing part (denoted by $\boldsymbol{u}_+$). Again, one may select the outgoing or the incoming parts, via radiation conditions for the solution:

1. The *outgoing Silver–Müller radiation condition* (imposes $\boldsymbol{u}_- = 0$)

$$\mathbf{curl}\,\boldsymbol{u} \times \boldsymbol{n} - \imath k\boldsymbol{u} = O(\frac{1}{r^2})\,. \tag{1.144}$$

2. The *incoming Silver–Müller radiation condition* (imposes $\boldsymbol{u}_+ = 0$)

$$\mathbf{curl}\,\boldsymbol{u} \times \boldsymbol{n} + \imath k\boldsymbol{u} = O(\frac{1}{r^2})\,. \tag{1.145}$$

Often in the literature (see [168], [87]), the Silver–Müller radiation conditions appear in another form, derived from the first-order time-harmonic Maxwell equations (1.52-1.55), with a zero right-hand side. In this instance, both electric field $\boldsymbol{e}$ and magnetic induction $\boldsymbol{b}$ are involved in the outgoing or incoming expressions that read, respectively, as:

1. First-order outgoing expression

$$\boldsymbol{e} - c\boldsymbol{b} \times \boldsymbol{n} = O(\frac{1}{r^2})\,,\ \text{or } c\boldsymbol{b} + \boldsymbol{e} \times \boldsymbol{n} = O(\frac{1}{r^2})\,, \tag{1.146}$$

2. First-order incoming expression

$$\boldsymbol{e} + c\boldsymbol{b} \times \boldsymbol{n} = O(\frac{1}{r^2})\,,\ \text{or } c\boldsymbol{b} - \boldsymbol{e} \times \boldsymbol{n} = O(\frac{1}{r^2})\,. \tag{1.147}$$

How can these conditions be used mathematically? For instance, let us go back to a diffraction problem, as pictured in Figure 1.2. The total electric field $\boldsymbol{e}$ can be split into two parts: the incident wave $\boldsymbol{e}_{inc}$, the known impinging wave that propagates in the medium, and would not be affected in the absence of a scatterer; and the scattered wave $\boldsymbol{e}_{sca}$, our unknown. By definition, the scattered wave is supposed to be outgoing, i.e., fulfill condition (1.144). Mathematically, this is expressed as

$$\lim_{R\to+\infty}\int_{\partial B(O,R)} |\,\mathbf{curl}\,\boldsymbol{e}_{sca}\times\boldsymbol{n}-\imath k\boldsymbol{e}_{sca}|^2 dS=0.$$

According to [135], this outgoing Silver–Müller radiation condition on $\boldsymbol{e}_{sca}$, together with the differential Maxwell equations (and a perfect conductor boundary condition on Γ) on the total field $\boldsymbol{e}=\boldsymbol{e}_{inc}+\boldsymbol{e}_{sca}$, leads to a well-posed problem.

To emphasize the differences between the time-harmonic Maxwell equations (1.142) and the vector Helmholtz one, note that the solutions to (1.142) satisfy a constraint on the divergence: they are divergence-free (see remark 1.2.3). This is not the case of the plain radial solutions $\boldsymbol{v}(r)$ to the vector Helmholtz equation. Nevertheless, these computations being essentially based on the asymptotic behavior of $\zeta_\pm(r)$, the Silver–Müller radiation conditions – considered componentwise for the time-harmonic Maxwell equations – are expected to be equivalent to the Sommerfeld radiation conditions. Indeed, it was proven that each component of any solution to Maxwell's equations satisfying the Silver–Müller radiation conditions also satisfies the corresponding Sommerfeld radiation conditions for the scalar Helmholtz equation, and vice versa (see [87] for a proof).

Let us conclude this section by briefly exposing the relation between the Silver–Müller radiation condition (1.146) and the Silver–Müller ABCs (1.137-1.138) in its homogeneous form, that is, with $(\boldsymbol{e}^\star,\boldsymbol{b}^\star)=(0,0)$. Note first that the similarity appears in the time-harmonic case, when comparing (1.137-1.138) with relations (1.146). Second, for the time-dependent case, recall that the ABCs were obtained by assuming that an outgoing plane wave, which propagates normally to the boundary, is not reflected. According to the previous discussion, the ABCs can also be viewed as a way of selecting a direction of propagation, by removing the incoming wave, the outgoing wave leaving the domain freely.

1.7 Energy matters

The aim of this section is to recall the basic notions related to the energy in the context of Maxwell's equations.

Let us consider first the case of a homogeneous medium (vacuum). Our starting point is Faraday's law (1.27) and the absence of magnetic monopoles (1.29). We have seen that there exist two independent potentials – $\boldsymbol{A}$ and ϕ – that can be used to take into account these two relations, and define the electromagnetic fields as in Eqs. (1.34-1.35). For our purpose here, we say that $(\boldsymbol{A}(t,\boldsymbol{x}))_{t,\boldsymbol{x}}$ and $(\phi(t,\boldsymbol{x}))_{t,\boldsymbol{x}}$ are the *generalized coordinates* of our system. Then, let us introduce the Lagrangian density

$$\begin{aligned}\mathcal{L}(t,\boldsymbol{x}) &= \mathcal{L}(\boldsymbol{A}(t,\boldsymbol{x}),\phi(t,\boldsymbol{x}))\\ &:= \left(\frac{\varepsilon_0}{2}|\boldsymbol{E}|^2 - \frac{1}{2\mu_0}|\boldsymbol{B}|^2 + \boldsymbol{A}\cdot\boldsymbol{J} - \phi\,\varrho\right)(t,\boldsymbol{x})\,, \qquad (1.148)\end{aligned}$$

together with the *Lagrangian* on a frozen (w.r.t. time) volume $V \subset \mathbb{R}^3$

$$\int_V \mathcal{L}\,dV.$$

Then, the idea is to use the *least action principle*, which amounts to finding extrema of the *action* (with $t_1 < t_2$ given)

$$S := \int_{t_1}^{t_2}\int_V \mathcal{L}\,dV\,dt$$

over trajectories $t \mapsto (\boldsymbol{A}(t),\phi(t))$ with *fixed* initial and final states. In other words, one chooses infinitesimal variations $\delta\boldsymbol{A}$ and $\delta\phi$ such that $(\delta\boldsymbol{A},\delta\phi)(t_1) = (\delta\boldsymbol{A},\delta\phi)(t_2) = 0$ in the volume V. A necessary condition for an extremum of S to exist is that $\delta S = 0$, with

$$\delta S := \int_{t_1}^{t_2}\int_V \delta\mathcal{L}\,dV\,dt,$$

for all admissible variations $(\delta\boldsymbol{A},\delta\phi)$. In a first step, one adds a new constraint on the variations, namely that $(\delta\boldsymbol{A},\delta\phi)(t) = 0$ for all $t \in]t_1,t_2[$, on the surface ∂V. One finds that the electromagnetic fields necessarily satisfy Ampère's and Gauss's laws, which appear within this framework as equations of *motion* of the electromagnetic fields. In a second step, one removes all constraints on the variations, to focus on the relation that defines δS, which now takes into account Ampère's and Gauss's laws, and holds for all variations (this is not the least action principle anymore). One finds that another necessary condition appears, which can be written as

$$\begin{aligned}\frac{d}{dt}\left(\int_V \{\frac{\varepsilon_0}{2}|\boldsymbol{E}|^2 + \frac{1}{2\mu_0}|\boldsymbol{B}|^2\}\,dV\right) + \int_{\partial V}\frac{1}{\mu_0}(\boldsymbol{E}\times\boldsymbol{B})\cdot\boldsymbol{dS}\\ + \int_V \boldsymbol{E}\cdot\boldsymbol{J}\,dV = 0. \qquad (1.149)\end{aligned}$$

This is an *integral electromagnetic energy conservation* relation. Indeed, let

$$w_0 = \frac{1}{2}\{\varepsilon_0|\boldsymbol{E}|^2 + \frac{1}{\mu_0}|\boldsymbol{B}|^2\} \tag{1.150}$$

be the *density of electromagnetic energy*, and let

$$\boldsymbol{S}_0 = \frac{1}{\mu_0}\boldsymbol{E} \times \boldsymbol{B}\,,$$

be the *vector flux* of the electromagnetic energy, called the *Poynting vector*. The conservation relation (1.149) writes

$$\frac{d}{dt}\left(\int_V w_0\, dV\right) + \int_{\partial V} \boldsymbol{S}_0 \cdot \boldsymbol{dS} + \int_V \boldsymbol{E} \cdot \boldsymbol{J}\, dV = 0.$$

From a physical point of view, the third term can be seen as the power dissipated by the Joule effect, and the second as the flux of the electromagnetic energy entering or leaving the domain V.
It can be written in *differential* form as

$$\frac{\partial w_0}{\partial t} + \operatorname{div} \boldsymbol{S}_0 + \boldsymbol{E} \cdot \boldsymbol{J} = 0.$$

Note that one can define the *total electromagnetic energy* by

$$W_{tot} = \int_{\mathbb{R}^3} w_0\, dV\,.$$

As originally expressed by Feynman [111], no doubt better than by us, we cannot be sure that these definitions are the "correct definitions". However, if one has a look at other possibilities in the definition of the Lagrangian density (1.148), one always comes up with non-linear terms in the equations of motion of the electromagnetic fields. Thus, it is "natural" to keep the simplest expressions, that is, (1.149-1.150). Nevertheless, these definitions have to be considered as *modelling assumptions*, which are used extensively in the mathematical analyses (see Chapter 5).

Let us consider next the case of a perfect medium, in which the constitutive relations read as in (1.17), with *symmetric* tensors $\mathfrak{e}$ and $\mathfrak{u}$. By analogy, we first introduce the *density of electromagnetic energy*:

$$w = \frac{1}{2}\{\boldsymbol{D} \cdot \boldsymbol{E} + \boldsymbol{B} \cdot \boldsymbol{H}\}\,.$$

Since $\mathfrak{e}$ and $\mathfrak{u}$ are both independent of t, one gets $\partial_t w = \partial_t \boldsymbol{D} \cdot \boldsymbol{E} + \partial_t \boldsymbol{B} \cdot \boldsymbol{H}$.

We also introduce the *Poynting vector* $\boldsymbol{S}$, defined as

$$\boldsymbol{S} = \boldsymbol{E} \times \boldsymbol{H}\,. \tag{1.151}$$

Taking the divergence of $\boldsymbol{S}$, we obtain

$$\operatorname{div} \boldsymbol{S} = \boldsymbol{H} \cdot \mathbf{curl}\, \boldsymbol{E} - \boldsymbol{E} \cdot \mathbf{curl}\, \boldsymbol{H}\,.$$

By using Faraday's and Ampère's laws, we can substitute in this expression $\mathbf{curl}\, \boldsymbol{E}$ by $-\partial_t \boldsymbol{B}$ and $\mathbf{curl}\, \boldsymbol{H}$ by $\partial_t \boldsymbol{D} + \boldsymbol{J}$ to reach

$$\frac{\partial w}{\partial t} + \operatorname{div} \boldsymbol{S} + \boldsymbol{E} \cdot \boldsymbol{J} = 0.$$

This equation is the *differential electromagnetic energy conservation* in the case of a perfect medium, and it can also be expressed in *integral* form, in any frozen volume V, as

$$\frac{d}{dt}\left(\int_V w\, dV\right) + \int_{\partial V} \boldsymbol{S} \cdot \boldsymbol{dS} + \int_V \boldsymbol{E} \cdot \boldsymbol{J}\, dV = 0. \tag{1.152}$$

In the more general case of a chiral medium, the previous notions (density, conservation of energy) are much more complex to build.

Let us examine now the case of static electromagnetic fields (cf. §1.4, Eqs. (1.104)), in vacuum.
Let us focus first on the total electrostatic energy: recall that $\boldsymbol{E}^{stat} = -\,\mathbf{grad}\, \phi^{stat}$, with a potential ϕ^{stat} governed by the Poisson equation (1.105). Then, one has, with the help of Ostrogradsky's formula,

$$\begin{aligned}
W_{tot}^{E,stat} &= \frac{\varepsilon_0}{2} \int_{\mathbb{R}^3} \boldsymbol{E}^{stat} \cdot \boldsymbol{E}^{stat}\, dV = -\frac{\varepsilon_0}{2} \int_{\mathbb{R}^3} \mathbf{grad}\, \phi^{stat} \cdot \boldsymbol{E}^{stat}\, dV \\
&= -\frac{\varepsilon_0}{2} \lim_{R \to +\infty} \int_{B(O,R)} \mathbf{grad}\, \phi^{stat} \cdot \boldsymbol{E}^{stat}\, dV \\
&= \frac{\varepsilon_0}{2} \lim_{R \to +\infty} \left\{ \int_{B(O,R)} \phi^{stat} \operatorname{div} \boldsymbol{E}^{stat}\, dV - \int_{\partial B(O,R)} \phi^{stat} (\boldsymbol{E}^{stat} \cdot \boldsymbol{dS}) \right\} \\
&= \frac{1}{2} \lim_{R \to +\infty} \left\{ \int_{B(O,R)} \phi^{stat} \varrho\, dV - \varepsilon_0 \int_{\partial B(O,R)} \phi^{stat} (\boldsymbol{E}^{stat} \cdot \boldsymbol{dS}) \right\} \\
&= \frac{1}{2} \int_{\mathbb{R}^3} \phi^{stat} \varrho\, dV\,.
\end{aligned}$$

It remains to explain why the rightmost term vanishes when R goes to infinity. For that, let us return to formula (1.30), which expresses the (static) electric field created by N charged particles. This formula can be further generalized to a volume distribution of charged particles, with density ϱ. One reaches

$$\boldsymbol{E}^{stat}(\boldsymbol{x}) = \frac{1}{4\,\pi\,\varepsilon_a} \int \varrho(\boldsymbol{x}') \frac{(\boldsymbol{x} - \boldsymbol{x}')}{|\boldsymbol{x} - \boldsymbol{x}'|^3}\, d\boldsymbol{x}'\,.$$

The above expression can be rewritten as a convolution product in space:

$$\boldsymbol{E}^{stat} = \frac{1}{4\,\pi\,\varepsilon_a} \varrho \star \boldsymbol{G}, \text{ with } \boldsymbol{G}(\boldsymbol{y}) = \frac{\boldsymbol{y}}{|\boldsymbol{y}|^3}\,.$$

Introducing $G(\boldsymbol{y}) = |\boldsymbol{y}|^{-1}$, which satisfies $\boldsymbol{G} = -\,\mathbf{grad}\, G$, one gets

$$\boldsymbol{E}^{stat} = -\,\mathbf{grad}\,\phi^{stat}, \text{ with } \phi^{stat} = \frac{1}{4\,\pi\,\varepsilon_a}\varrho \star G\,,$$

with ϕ^{stat} the corresponding electrostatic potential.
Provided that the support of ϱ is a bounded subset of $\mathbb{R}^3$ – physically, provided that there are no charged particles at infinity – one finds that

$$|\phi^{stat}(\boldsymbol{x})| \leq \frac{C_\varrho}{|\boldsymbol{x}|} \text{ and } |\boldsymbol{E}^{stat}(\boldsymbol{x})| \leq \frac{C_\varrho}{|\boldsymbol{x}|^2}\,,$$

with C_ϱ a constant that depends on ϱ. Therefore, one has

$$\left|\int_{\partial B(O,R)} \phi^{stat}(\boldsymbol{E}^{stat}\cdot \boldsymbol{dS})\right| \leq \frac{4\pi\, C_\varrho^2}{R}.$$

So, the conclusion follows. For a volumic distribution of charges – without charges at infinity – the *total electrostatic energy* is equal to

$$W_{tot}^{E,stat} = \frac{1}{2}\int_{\mathbb{R}^3} \phi^{stat}\varrho\, dV\,. \tag{1.153}$$

Remark 1.7.1 *Expression (1.153) involves the potential ϕ^{stat} and the charge density ϱ, which are related by the Poisson equation (1.105). Thus, it can also be viewed as the potential energy of the system of charges.*

Interestingly, and for volume distribution of charged particles, Expression (1.153) includes the *self-energy* of the distribution. In other words, if V_0 denotes the support of the charge density, the expression

$$W_{V_0}^{E,stat} = \frac{1}{2}\int_{V_0} \phi^{stat}\varrho\, dV$$

has a meaning. This can be proven mathematically, due to the properties of the Green kernel G.
Contrastingly, the potential ϕ^{stat} is meaningless for discrete systems of charged particles (see Eq. (1.30), right) at the positions $(\boldsymbol{x}_i)_{1\leq i\leq N}$ of the charges, and the charge density ϱ writes as a sum of Dirac masses located, respectively, at $(\boldsymbol{x}_i)_{1\leq i\leq N}$. So, one cannot define the self-energy for discrete sets of charged particles. This is consistent with the fact that, in this situation, $\boldsymbol{E}^{stat}$ is not square integrable in volumes enclosing one or several charges.
So far, we have considered 3D- and 0D-supported charge distributions. In-between these two configurations, there exist 1D- and 2D-supported charge distributions, such as *idealized wires* and surface charges on perfect conductors (cf. the infinite skin effect for the latter). On the one hand, it turns out that one can define the self-energy of surface charge distributions as

$$W_{\Sigma}^{E,stat} = \frac{1}{2}\int_{\Sigma} \phi^{stat}\sigma_{\Sigma}\, dS\,.$$

But on the other hand, one cannot define the self-energy for linear charge distributions.

The discussion of the *total magnetostatic energy* follows the same lines, since one has $\boldsymbol{B}^{stat} = \mathbf{curl}\,\boldsymbol{A}^{stat}$, with $\boldsymbol{A}^{stat}$ governed by the vector Poisson equation (1.106), with a constraint on the divergence. As previously, using Stokes' formula and provided there are no currents at infinity, one then finds the identity

$$W_{tot}^{B,stat} = \frac{1}{2\mu_0}\int_{\mathbb{R}^3} \boldsymbol{B}^{stat}\cdot\boldsymbol{B}^{stat}\, dV = \frac{1}{2}\int_{\mathbb{R}^3} \boldsymbol{A}^{stat}\cdot\boldsymbol{J}\, dV\,.$$

Provided the time-dependent electromagnetic fields behave similarly at infinity, i.e., $|\boldsymbol{E}(t,\boldsymbol{x})| \le C_{\varrho}(t)\,|\boldsymbol{x}|^{-2}$ and $|\boldsymbol{H}(t,\boldsymbol{x})| \le C_{\boldsymbol{J}}(t)\,|\boldsymbol{x}|^{-2}$, one finds that

$$\frac{dW_{tot}}{dt} + \int_{\mathbb{R}^3} \boldsymbol{E}\cdot\boldsymbol{J}\, dV = 0\,.$$

To conclude this section, we write down the electromagnetic energy flow in the case of a time-harmonic dependent field. The electromagnetic fields are expressed as in (1.41-1.42), and we substitute these expressions in the Poynting vector (1.151), which characterizes the energy flow, to obtain the *complex-valued Poynting vector* $\boldsymbol{S}^c$

$$\boldsymbol{S}^c = \frac{1}{2}\boldsymbol{E}^c \times \overline{\boldsymbol{H}^c}\,.$$

This complex-valued Poynting vector is generally used to measure the energy flow for complex-valued electromagnetic fields ($\boldsymbol{S} = \Re(\boldsymbol{S}^c)$).
Finally, we consider the electromagnetic fields, expressed as a superposition of plane waves (in a homogeneous medium). Using Parseval's formula, we remark that the total electromagnetic energy also writes

$$W_{tot} = \frac{1}{2}\int_{\boldsymbol{k}\in\mathbb{R}^3} \left(\varepsilon_0|\boldsymbol{E}_0(\boldsymbol{k})|^2 + \frac{1}{\mu_0}|\boldsymbol{B}_0(\boldsymbol{k})|^2\right)\, d\boldsymbol{k}.$$

1.8 Bibliographical notes

Concerning the form of Maxwell's equations, we relied on the physical approach of Jackson [142, Chapter 1] and on the topological approach of Gross and Kotiuga [128]. See also the book by Jones [149]. As far as the constitutive relations are concerned, References [142, 153, 157, 150] have been helpful. The experimental results acquired a historical status a long time ago, cf. Coulomb's experiments in 1785. The "existence" results of electromagnetic fields in all

space $\mathbb{R}^3$ can be found in many places: we chose [141] for the general case of a chiral medium and Chapter 6 in the monograph by Cessenat [73] for the particular case of a homogeneous medium. In regard to conducting media, we used the numerical results from [128, Chapter 1]. Regarding the issue of vanishing electromagnetic fields inside perfect conductors, we mention [168, Chapter 5], where illuminating comments and (partial) mathematical justification can be found. Let us mention [197, 143, 142, 95, 162] for the definition of skin depth in different models; see also [193] for the notion of *magnetic skin depth*.

On the vast topic of the stationary Maxwell equations, we refer the reader (for instance) to the introductory book by Laval [154], and to the monograph by Krall and Trivelpiece [152]. See also the book by Van Bladel [203]. The limiting amplitude principle is rigorously proven in the monograph by Sanchez and Sanchez [185].

As far as the approximate models are concerned, we refer the reader to the works of Raviart and co-workers [97, 178], where the general methodology on how to build those models is described. In geophysics, approximate models are considered, for instance, in [43, 86]. The static models have been scrutinized extensively by Durand in his three-volume series [104]: in particular, an impressive number of computations carried out by hand (before the era of personal computers) are available. The Darwin model is named after C. G. Darwin, who studied the motion of charged particles in the 1920s [91]. In bounded domains, References [97, 84] provide some insight as to how one can define suitable boundary conditions for the transverse and longitudinal parts of the electric field.

The derivation of the Boltzmann and Vlasov equations can be found, for instance, in the monographs by Krall and Trivelpiece [152] or by Lifschitz [156] (physical point of view), or in the classnotes by Desvillettes [99] (mathematical point of view). Regarding plasma physics, we refer to [74].

To our knowledge, the first theoretical works on the Vlasov equation are those of Arseneev [12, 13]. For the coupled Vlasov–Maxwell system of equations, local existence and uniqueness results of classical solutions can be found in [202, 96] or in [208, 123]. Global existence results of weak solutions appeared in [102, 130]. See also a survey in [59].

For the study of the transparent boundary conditions, including their representations and their approximations, we recommend reading the monograph by Nédélec [168].

The Sommerfeld ABC that we recalled for the Helmholtz equation is named after A. Sommerfeld [195]. The Silver–Müller ABCs that we described are named after C. Müller [166] and S. Silver [191]. In their time-dependent form, they have been designed (cf. [23]) in the same spirit as the ones given in [47, pp. 370-371]. There exists a wide literature on the topic of ABCs: see, for instance, [106] for the scalar wave equation and [40, 148, 189, 119] for Maxwell's equations. In the time-harmonic regime, there also exist many noticeable research works, such as [189, 39, 11]. As far as Bérenger's PMLs are concerned,

we refer the reader to the seminal papers [41, 42], and to variants, for instance [76, 176, 183, 116, 117, 2, 52].
For radiation conditions, we refer the reader to the monographs [166, 87, 168] and to [135].
The notion of electromagnetic energy is studied in-depth in many monographs. Many aspects have been scrutinized: physical, computational, mathematical, etc. We refer, respectively, to the book by Laval [154], and the monographs by Jackson [142], Durand [104, Volume I] and Cessenat [73, Chapter 1].

2

Basic applied functional analysis

To measure data and solutions spatially, we recall a number of useful definitions and results on Lebesgue and standard Sobolev spaces. Then, we introduce more specialized Sobolev spaces, which are better suited to measuring solutions to electromagnetics problems, in particular, the divergence and the curl of fields. This also allows one to measure their trace at interfaces between two media, or on the boundary. Last, we construct *ad hoc* function spaces, adapted to the study of time- and space-dependent electromagnetic fields.
For bibliographical references on the general results, we refer the reader to [115, 187, 167, 158, 3, 201, 209, 63, 125, 93, 92, 94, 126, 4]. For some of the more specialized results, we provide references along the way.

2.1 Function spaces for scalar fields

Unless otherwise specified, the function spaces will be defined on a subset of $\mathbb{R}^n$ (possibly $\mathbb{R}^n$ itself). The definitions and properties that we list hereafter can depend on the category of subsets of $\mathbb{R}^n$ on which they are given. We shall consider three categories: (C1) open subsets, (C2) open subsets with Lipschitz boundary, and (C3) bounded, open connected subsets with Lipschitz boundary, also called *domains*. The last category will include an important subcategory, the *curved polyhedra*, that is, domains with a piecewise smooth, curved boundary.
An element $\alpha = (\alpha_1, \cdots, \alpha_n)$ of $\mathbb{N}^n$ is called a multi-index, with $|\alpha| = \sum_{j=1}^n \alpha_j$. The partial derivative of order α is further denoted by

$$\partial_\alpha f = \frac{\partial^{|\alpha|} f}{\partial x_1^{\alpha_1} \cdots \partial x_n^{\alpha_n}}.$$

Let $d\boldsymbol{x} = dx_1 dx_2 \cdots dx_n$ denote the Lebesgue measure in $\mathbb{R}^n$.

<u>Category</u> (<u>C1</u>): open subsets of $\mathbb{R}^n$.
Consider a set Ω that belongs to the category (C1).

Let us begin with the Lebesgue spaces $L^p(\Omega)$, for $1 \leq p \leq \infty$. One usually considers complex-valued functions, but all definitions are easily extended to real-valued function spaces. Details on Banach and Hilbert spaces, and also on the duality and interpolation theories, can be found in §4.1.

Definition 2.1.1 *The space $L^p(\Omega)$ is composed of all complex-valued, Lebesgue-measurable functions f on Ω, and such that*

$$\begin{cases} \textit{for } 1 \leq p < \infty & \|f\|_{L^p(\Omega)} := \left\{ \displaystyle\int_\Omega |f|^p \, d\boldsymbol{x} \right\}^{1/p} < \infty \\ \textit{for } p = \infty & \|f\|_{L^\infty(\Omega)} := \operatorname{esssup}_{\boldsymbol{x} \in \Omega} |f(\boldsymbol{x})| < \infty \end{cases}.$$

Endowed with the norm $\|\cdot\|_{L^p(\Omega)}$, $L^p(\Omega)$ is a Banach space and, for $1 \leq p < \infty$, is separable.

Let $p \in [1, \infty]$, $f_1 = f_2$ in $L^p(\Omega)$ mean that $f_1, f_2 \in L^p(\Omega)$ and $f_1 = f_2$ almost everywhere in Ω. One can then define the spaces of functions that are *locally* in L^p in the following way. If[1] $f\mathbf{1}_K$ belongs to $L^p(\Omega)$ for every compact subset K of Ω, then f is locally in $L^p(\Omega)$, and one writes

$$f \in L^p_{loc}(\Omega).$$

One then has a stability result of the multiplication by elements of $L^\infty(\Omega)$.

Proposition 2.1.2 *Let $1 \leq p \leq \infty$. The multiplication is a continuous bilinear mapping from $L^\infty(\Omega) \times L^p(\Omega)$ to $L^p(\Omega)$.*

Given $1 \leq p \leq \infty$, one defines its *conjugate exponent* p' as $1/p + 1/p' = 1$. The Hölder inequality yields the next result.

Proposition 2.1.3 *Let $1 \leq p \leq \infty$ and p' BE its conjugate exponent. Then, given $(f, g) \in L^p(\Omega) \times L^{p'}(\Omega)$, one has $fg \in L^1(\Omega)$.*

One can build dual spaces of the Lebesgue spaces.

Proposition 2.1.4 *Let $1 \leq p < \infty$ and p' be its conjugate exponent. Then, the dual space of $L^p(\Omega)$ can be identified with $L^{p'}(\Omega)$: $(L^p(\Omega))' = L^{p'}(\Omega)$. On the other hand, $L^1(\Omega) \subset (L^\infty(\Omega))'$ but $(L^\infty(\Omega))' \neq L^1(\Omega)$.*

Emphasis is then laid on the $L^2(\Omega)$ space, which is, in addition, a separable Hilbert space.

Proposition 2.1.5 *The space $L^2(\Omega)$ is a separable Hilbert space, endowed with the scalar product*

$$(f|g) := \int_\Omega f \, \overline{g} \, d\boldsymbol{x}.$$

[1] Given any subset S of $\mathbb{R}^n$, $\mathbf{1}_S$ denotes the *indicator function* of S.

Let us recall now some basic ideas about distributions, including the definition of differentiation in the sense of distributions. We begin with the space $\mathcal{D}(\Omega)$ of infinitely differentiable functions,[2] with compact support on Ω. Classically, this function space is not reduced to $\{0\}$. In practice, one can use the convergence of sequences to define the topology. Let $(f_k)_k$ be a sequence of elements of $\mathcal{D}(\Omega)$: it converges in $\mathcal{D}(\Omega)$ to f if, and only if:

(i) there exists a compact subset K of Ω such that $\mathrm{supp}(f_k) \subset K$, for large enough k;
(ii) for all multi-indices α, $(\partial_\alpha f_k)_k$ converges uniformly in K to $\partial_\alpha f$.

Definition 2.1.6 *A linear and continuous form T defined on $\mathcal{D}(\Omega)$ is called a distribution. The space of distributions is denoted by $\mathcal{D}'(\Omega)$.*
Let $T \in \mathcal{D}'(\Omega)$ and $f \in \mathcal{D}(\Omega)$: the action of T on f is written with the help of duality brackets, that is,

$$\langle T, f \rangle.$$

According to the topology on $\mathcal{D}(\Omega)$, T is continuous, provided that

$$\forall (f_k)_k, f \in \mathcal{D}(\Omega) \text{ such that } f_k \to f \text{ in } \mathcal{D}(\Omega), \quad \langle T, f_k \rangle \to \langle T, f \rangle.$$

A few examples will be provided in the sequel (2.1), (2.5), (2.6). As a dual space, $\mathcal{D}'(\Omega)$ can be equipped in a "natural" way with a topology, called the weak-star topology.

Definition 2.1.7 *Let $(T_k)_k$ be a sequence of elements of $\mathcal{D}'(\Omega)$: it converges in $\mathcal{D}'(\Omega)$ to T if, and only if, for all f in $\mathcal{D}(\Omega)$, $\langle T_k, f \rangle \to \langle T, f \rangle$.*

One can easily prove the imbedding

$$L^1_{loc}(\Omega) \subset \mathcal{D}'(\Omega), \tag{2.1}$$

by identifying elements f of $L^1_{loc}(\Omega)$ with distributions, still denoted by f, according to

$$\forall g \in \mathcal{D}(\Omega), \quad \langle f, g \rangle = \int_\Omega f\, g\, d\boldsymbol{x}. \tag{2.2}$$

Since, for $p \in [1, \infty]$, one has $L^p(\Omega) \subset L^p_{loc}(\Omega) \subset L^1_{loc}(\Omega)$, one can also consider elements of $L^p(\Omega)$ or $L^p_{loc}(\Omega)$ as distributions. In particular, given $f \in L^2(\Omega)$, one has $\langle f, g \rangle = (f|\overline{g})$ for all $g \in \mathcal{D}(\Omega)$.
Let us recall a property that will be used throughout this book, namely...

Proposition 2.1.8 *Let f_1 and f_2 be two elements of $L^1_{loc}(\Omega)$. The relation $\langle f_1, g \rangle = \langle f_2, g \rangle$ for all $g \in \mathcal{D}(\Omega)$ implies that $f_1 = f_2$ almost everywhere in Ω.*

Now, one can introduce the notion of differentiation in the sense of distributions.

[2] The space $\mathcal{D}(\Omega)$ can also be denoted by $C^\infty_c(\Omega)$, where the index $_c$ stands for compact support.

Definition 2.1.9 *Let $T \in \mathcal{D}'(\Omega)$. Its j-th partial derivative ($j = 1, \cdots, n$) is defined by*

$$\forall f \in \mathcal{D}(\Omega), \quad \langle \frac{\partial T}{\partial x_j}, f \rangle = -\langle T, \frac{\partial f}{\partial x_j} \rangle.$$

One thus has...

Proposition 2.1.10 *The mapping $T \mapsto \partial_j T$ is linear and continuous from $\mathcal{D}'(\Omega)$ to $\mathcal{D}'(\Omega)$.*

Since $L^2(\Omega)$ is a subspace of $\mathcal{D}'(\Omega)$ (by identification, cf. (2.2)), it is therefore possible to differentiate its elements in the sense of distributions. We define below the first Sobolev space in a long series.

Definition 2.1.11 *Let $H^1(\Omega) := \{f \in L^2(\Omega) \ : \ \partial_j f \in L^2(\Omega), \ j = 1, \cdots, n\}$, where differentiation is understood in the sense of distributions (Definition 2.1.9). An associated norm is*

$$\|f\|_{H^1(\Omega)} := \left\{ \int_\Omega (|f|^2 + |\,\mathbf{grad}\, f|^2)\, d\boldsymbol{x} \right\}^{1/2}.$$

It is a separable Hilbert space, endowed with the scalar product

$$(f, g)_{H^1(\Omega)} := \int_\Omega (f\, \overline{g} + \mathbf{grad}\, f \cdot \overline{\mathbf{grad}\, g})\, d\boldsymbol{x}.$$

It is also possible to give an equivalent definition of $H^1(\Omega)$.

Proposition 2.1.12 *Let $f \in L^2(\Omega)$. Then, f belongs to $H^1(\Omega)$ if, and only if, there exist $C_1, \cdots, C_n \geq 0$, such that, for $j = 1, \cdots, n$,*

$$\forall g \in \mathcal{D}(\Omega), \quad \left| (f | \frac{\partial g}{\partial x_j}) \right| \leq C_j \|g\|_{L^2(\Omega)}.$$

Now, let α be a multi-index. From Definition 2.1.9, one recursively deduces...

Definition 2.1.13 *Let $T \in \mathcal{D}'(\Omega)$; its partial derivative of order α is defined by*

$$\forall f \in \mathcal{D}(\Omega), \quad \langle \partial_\alpha T, f \rangle = (-1)^{|\alpha|} \langle T, \partial_\alpha f \rangle.$$

When $\alpha = (0, \cdots, 0)$, there is no differentiation involved!
This allows us to consider Sobolev spaces of integer order m, $m \geq 2$.

Definition 2.1.14 *Let $m \in \mathbb{N}$: $H^m(\Omega) := \{f \in L^2(\Omega) \ : \ \partial_\alpha f \in L^2(\Omega), \ \forall \alpha \in \mathbb{N}^n, \ |\alpha| \leq m\}$. The canonical norm is*

$$\|f\|_{H^m(\Omega)} := \left\{ \int_\Omega \sum_{\alpha \in \mathbb{N}^n, \ |\alpha| \leq m} |\partial_\alpha f|^2\, d\boldsymbol{x} \right\}^{1/2}. \tag{2.3}$$

It is a separable Hilbert space, endowed with the scalar product

$$(f,g)_{H^m(\Omega)} := \int_\Omega \sum_{\alpha\in\mathbb{N}^n,\ |\alpha|\le m} \partial_\alpha f \overline{\partial_\alpha g}\, d\boldsymbol{x}.$$

Finally, $|\cdot|_{H^m(\Omega)}$ *denotes the semi-norm*

$$|f|_{H^m(\Omega)} := \left\{ \int_\Omega \sum_{\alpha\in\mathbb{N}^n,\ |\alpha|=m} |\partial_\alpha f|^2\, d\boldsymbol{x} \right\}^{1/2}. \tag{2.4}$$

Remark 2.1.15 *If* $m=1$*, the two definitions of* $H^1(\Omega)$ *coincide, whereas if* $m=0$*, one has* $H^0(\Omega)=L^2(\Omega)$*.*

Then, one can introduce fractional-order Sobolev spaces, that is, with order $s\in\mathbb{R}_+ := [0,\infty[$. Let us consider the case $\Omega=\mathbb{R}^n$, for which one can use the Fourier transform from $L^2(\mathbb{R}^n)$ to $L^2(\mathbb{R}^n)$. Classically, for $f\in L^2(\mathbb{R}^n)$, the Fourier transform of f is $\hat{f}$, given by

$$\forall \boldsymbol{k}\in\mathbb{R}^n,\quad \hat{f}(\boldsymbol{k}) = (2\pi)^{-n}\int_{\boldsymbol{x}\in\mathbb{R}^n} f(\boldsymbol{x})\exp(-\imath\boldsymbol{k}\cdot\boldsymbol{x})\, d\boldsymbol{x}\,.$$

In particular, one has $\|\hat{f}\|_{L^2(\mathbb{R}^n)} = (2\pi)^{-n/2}\|f\|_{L^2(\mathbb{R}^n)}$.

Definition 2.1.16 *Let* $s\in\mathbb{R}_+$*:* $H^s(\mathbb{R}^n) := \{f\in L^2(\mathbb{R}^n) : (1+|\cdot|^2)^{s/2}\hat{f}\in L^2(\mathbb{R}^n)\}$*, with norm*

$$\|f\|_{H^s(\mathbb{R}^n)} := \left\{ \|\hat{f}\|^2_{L^2(\mathbb{R}^n)} + \|(1+|\cdot|^2)^{s/2}\hat{f}\|^2_{L^2(\mathbb{R}^n)} \right\}^{1/2}.$$

It is a Hilbert space, endowed with the scalar product

$$(f,g)_{H^s(\mathbb{R}^n)} := (\hat{f},\hat{g})_{L^2(\mathbb{R}^n)} + \Big((1+|\cdot|^2)^{s/2}\hat{f}, (1+|\cdot|^2)^{s/2}\hat{g}\Big)_{L^2(\mathbb{R}^n)}.$$

Obviously, when $s\in\mathbb{N}$, $H^s(\mathbb{R}^n)$ coincides algebraically and topologically with the space of Definition 2.1.14 (case $\Omega=\mathbb{R}^n$).
When Ω is an open subset of $\mathbb{R}^n$, let us define $H^s(\Omega)$ for $s\in\mathbb{R}_+\setminus\mathbb{N}$ by interpolation.

Definition 2.1.17 *Let* $s\in\mathbb{R}_+\setminus\mathbb{N}$*, and write* $s=m+\sigma$*, with* $(m,\sigma)\in\mathbb{N}\times]0,1[$*. The Hilbert space* $H^s(\Omega)$ *is the interpolated space*

$$H^s(\Omega) := [H^{m+1}(\Omega), H^m(\Omega)]_{1-\sigma}.$$

Its norm and scalar product are denoted by $\|\cdot\|_{H^s(\Omega)}$ *and* $(\cdot,\cdot)_{H^s(\Omega)}$*.*

Remark 2.1.18 *The above Definition is motivated by the fact that, when* $\Omega=\mathbb{R}^n$*, the definitions via the Fourier transform and the interpolation theory coincide algebraically and topologically.*

One can then define the spaces of functions that are *locally* in H^s in the following way. If f belongs to $H^s(\omega)$ for every open subset ω of every compact subset of Ω, then f is locally in $H^s(\Omega)$, and one writes

$$f \in H^s_{loc}(\Omega).$$

One has the continuous imbeddings, for $t > s > 0$,

$$\mathcal{D}(\Omega) \subset H^t(\Omega) \subset H^s(\Omega) \subset L^2(\Omega). \tag{2.5}$$

To extend the scale of Sobolev spaces to negative fractional order, let us build dual spaces of the Sobolev spaces $H^s(\Omega)$, $s \geq 0$. As a matter of fact, one *instead* considers the dual spaces of

$$H^s_0(\Omega) := \text{closure of } \mathcal{D}(\Omega) \text{ in } H^s(\Omega), \text{ for } s \geq 0.$$

As a closed subspace of $H^s(\Omega)$, $H^s_0(\Omega)$ is a separable Hilbert space. The motivation is twofold:

- By a density argument, one can replace elements of $H^s_0(\Omega)$ with elements of $\mathcal{D}(\Omega)$.
- When the boundary of Ω is bounded and appropriately smooth, $H^s_0(\Omega)$ can be characterized as a subspace of $H^s(\Omega)$, the elements of which fulfill some homogeneous boundary conditions (see Theorem 2.1.62 and Remark 2.1.64.)

NB. It holds that $H^s_0(\mathbb{R}^n) = H^s(\mathbb{R}^n)$, for all $s \geq 0$.

Definition 2.1.19 *For $s \geq 0$, the dual space of $H^s_0(\Omega)$ is called $H^{-s}(\Omega)$. The action of elements of $H^{-s}(\Omega)$ on elements of $H^s_0(\Omega)$ is denoted with the help of duality brackets: $\langle \cdot, \cdot \rangle_{H^s_0(\Omega)}$.*
Its canonical norm is denoted by $\| \cdot \|_{H^{-s}(\Omega)}$:

$$\|f\|_{H^{-s}(\Omega)} := \sup_{v \in H^s_0(\Omega), v \neq 0} \frac{\langle f, v \rangle_{H^s_0(\Omega)}}{\|v\|_{H^s(\Omega)}}.$$

Endowed with $\|\cdot\|_{H^{-s}(\Omega)}$, $H^{-s}(\Omega)$ is a Banach space. Furthermore, as the dual of a (separable) Hilbert space, $H^{-s}(\Omega)$ can be made into a (separable) Hilbert space, with a scalar product $(\cdot, \cdot)_{H^{-s}(\Omega)}$ such that $\|f\|^2_{H^{-s}(\Omega)} = (f, f)_{H^{-s}(\Omega)}$ for all $f \in H^{-s}(\Omega)$.

Proposition 2.1.20 *Let $m \in \mathbb{N}$. The space $H^{-m}(\Omega)$ is made up of distributions of the form*

$$\sum_{\alpha \in \mathbb{N}^n,\ |\alpha| \leq m} \partial_\alpha f_\alpha, \text{ with } f_\alpha \in L^2(\Omega).$$

Identifying $L^2(\Omega)$ with its dual space, one has the continuous imbeddings, for $t > s > 0$,

$$L^2(\Omega) \subset H^{-s}(\Omega) \subset H^{-t}(\Omega) \subset \mathcal{D}'(\Omega). \tag{2.6}$$

In order to deal with functions that are defined on a *proper* subset of the actual domain of interest, one has (unfortunately) to introduce a final class of Sobolev space...

Definition 2.1.21 *Let $s \geq 0$. The space $\widetilde{H}^s(\Omega)$ is composed of elements f of $H^s(\Omega)$ such that the continuation of f by zero outside Ω belongs to $H^s(\mathbb{R}^n)$. The dual space of $\widetilde{H}^s(\Omega)$ is denoted by $\widetilde{H}^{-s}(\Omega)$.*

Now, let us consider functions that are defined up to the boundary, i.e., on $\overline{\Omega}$. To that aim, we need some additional assumptions, which are summarized below.

<u>Category</u> (<u>C2</u>): open subsets of $\mathbb{R}^n$, with a *Lipschitz boundary.*

Definition 2.1.22 *Let Ω be an open subset of $\mathbb{R}^n$, with boundary Γ. the boundary Γ is said to be* Lipschitz *if, and only if:*

- *at each point $\boldsymbol{x}$ of Γ, there exists a* Lipschitz-continuous *mapping (defined on a hypercube of $\mathbb{R}^{n-1}$ with values in $\mathbb{R}$), the graph of which locally represents Γ in a neighborhood of $\boldsymbol{x}$;*
- *at each point $\boldsymbol{x}$ of Γ, Ω is* locally on one side only *of Γ.*

Similarly, the boundary is said to be C^k (respectively $C^{k,1}$) for $k \in \mathbb{N}^*$, when all local mappings are of regularity C^k (respectively $C^{k,1}$)([3]).

Remark 2.1.23 *When Γ is Lipschitz, it is, in particular, a Lipschitz submanifold of $\mathbb{R}^n$. On the one hand, the interior Ω_i and the exterior Ω_e of a cube belong to the category (C2). On the other hand, a set with a boundary including cusps, cuts or slits does not...*

It is then *a priori* possible to define the *unit outward normal vector* to the boundary of an open set of category (C2), where, by outward, it is understood that the vector points out of Ω.

Definition 2.1.24 *In an open set Ω of category (C2), one denotes by $\boldsymbol{n}$ the unit outward normal vector to its boundary Γ.*

[3] Classically, for $k \in \mathbb{N}$, $\beta \in]0,1]$, $\mathcal{O} \subset \mathbb{R}^n$, $C^{k,\beta}(\mathcal{O})$ is the Hölder space defined by

$$C^{k,\beta}(\mathcal{O}) := \{f \in C^k(\mathcal{O}) \ : \ \sum_{\alpha \in \mathbb{N}^n,\ |\alpha|=k} \sup_{\boldsymbol{x} \neq \boldsymbol{y}} \frac{|\partial_\alpha f(\boldsymbol{x}) - \partial_\alpha f(\boldsymbol{y})|}{|\boldsymbol{x} - \boldsymbol{y}|^\beta} < \infty\},$$

where $C^k(\mathcal{O}) := \{f \in C^0(\mathcal{O}) \ : \ \partial_\alpha f \in C^0(\mathcal{O}),\ \forall \alpha \in \mathbb{N}^n,\ |\alpha| \leq k\}$.
Lipschitz-continuity coincides with $C^{0,1}$ continuity.

Proposition 2.1.25 *In an open set Ω of category (C2), the unit outward normal vector field $\boldsymbol{n}$ is defined almost everywhere on Γ, and furthermore, $n_i \in L^\infty(\Gamma)$, $i = 1, \cdots, n$.*

Remark 2.1.26 *In an open subset of $\mathbb{R}^n$ with $C^{k,1}$ boundary ($k \in \mathbb{N}^*$), it holds that $n_i \in C^{k-1,1}(\Gamma)$, $i = 1, \cdots, n$.*

In such open sets of $\mathbb{R}^n$, it is possible to establish very convenient *density* results. Let us first introduce a set of smooth functions.

Definition 2.1.27 *The space $C_c^\infty(\overline{\Omega})$ is composed of the restrictions to $\overline{\Omega}$ of C^∞ functions with compact support in $\mathbb{R}^n$.*

Proposition 2.1.28 *Let $s \geq 0$. In an open set Ω of category (C2), $C_c^\infty(\overline{\Omega})$ is dense in $H^s(\Omega)$.*

It is because Ω is locally on *only* one side of its boundary that one can define elements of $C_c^\infty(\overline{\Omega})$ as restrictions. This property allows one to establish the previous Proposition. Another closely related result is...

Proposition 2.1.29 *Let $s \geq 0$. In an open set Ω of category (C2), $\mathcal{D}(\Omega)$ is dense in $\widetilde{H}^s(\Omega)$.*

These results are also related to *restriction* and *continuation* properties that we recall below.

Proposition 2.1.30 *Let $s \geq 0$, and let Ω be an open set of category (C2). Then, the restriction operator $u \mapsto u_{|\Omega}$ is continuous from $H^s(\mathbb{R}^n)$ to $H^s(\Omega)$.*

Proposition 2.1.31 *Let $s \geq 0$, and let Ω be an open set of category (C2) with a bounded boundary.*
Then, there exists a continuous (linear) continuation operator E from $H^s(\Omega)$ to $H^s(\mathbb{R}^n)$, independent of s, such that, for all $u \in H^s(\Omega)$, $(Eu)_{|\Omega} = u$.

Remark 2.1.32 *If, in addition, Ω is bounded, one can choose a closed ball $\mathcal{O}$ containing Ω such that for all $u \in H^s(\Omega)$, Eu is supported in $\mathcal{O}$.*

Category (C3): *bounded*, open and *connected* subsets of $\mathbb{R}^n$ with a Lipschitz boundary. A set of category (C3) will be called a *domain* later on.

NB. Ω_i belongs to the category (C3), but Ω_e does not.

Let us review some practical instances of open sets Ω of the category (C3), in $\mathbb{R}^2$ and $\mathbb{R}^3$.
In $\mathbb{R}^2$, open sets bounded by a polygonal boundary automatically fall into this category: these are called *polygons*.
This is also the case for *curvilinear polygons*, defined as follows. An open subset Ω of $\mathbb{R}^2$ of the category (C3) has a C^2 curvilinear polygonal boundary Γ if, for all points G of Γ, there exists $r_G > 0$ and a diffeomorphism χ_G,

such that χ_G is a piecewise, C^2-diffeomorphism that maps the neighborhood $\overline{\Omega} \cap B(G, r_G)$ of G to a neighborhood of the origin O, included in the plane sector $P_G := \{(r\cos\theta, r\sin\theta) \ : \ r \geq 0, \theta \in [0; \omega_G]\}$ of opening $\omega_G \in \,]0; 2\pi[$, G being sent to O.
In the same spirit, one can define *spherical curvilinear polygons*, as open subsets of the sphere $\mathbb{S}^2$ that fulfill the same property (existence of a piecewise, C^2-diffeomorphism) at all boundary points.
All of the above belong to the class of *curvilinear polygons*. Loosely speaking, the boundary of a curvilinear polygon is a manifold with corners.
In $\mathbb{R}^3$, one can consider a set Ω with a boundary Γ, made of a finite set of *planes faces*, i.e., a polyhedral boundary. Note that, contrary to the sets of $\mathbb{R}^2$, there actually exist bounded open sets with a polyhedral boundary, which do not fulfill the second requirement, stating that at each point of Γ, Ω is locally on one side of Γ. An example is pictured below: let Ω_0 be an open set, interior to the "two sugarcubes". In any neighborhood of the point C, which is located at the intersection of boundary edges, Ω_0 is not only on one side of its boundary.

One can also define *curved polyhedra*. Let us consider an open subset Ω

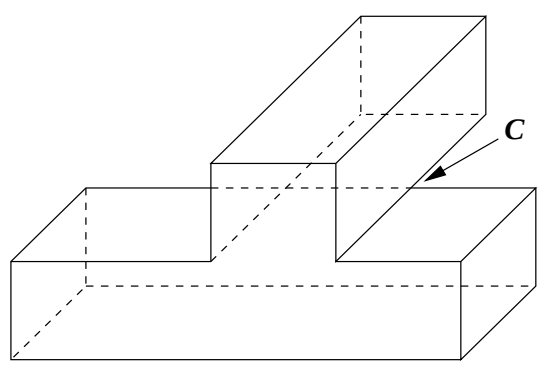

Fig. 2.1. The "two sugarcubes".

of $\mathbb{R}^3$ of the category (C3): Ω has a C^2 curved polyhedral boundary Γ if, for all points G of Γ, there exists $r_G > 0$ and a diffeomorphism χ_G, such that χ_G is a piecewise, C^2-diffeomorphism that maps the neighborhood $\overline{\Omega} \cap B(G, r_G)$ of G to a neighborhood of the origin O, included in the cone $C_G := \left\{\boldsymbol{x} \in \mathbb{R}^3 \ : \ \boldsymbol{x}/|\boldsymbol{x}| \in S_G\right\}$, with S_G a spherical curvilinear polygon of $\mathbb{S}^2$, G being sent to O.
Subsets of $\mathbb{R}^3$ of the category (C3) with a polyhedral boundary, or with a curved polyhedral boundary, are called *curved polyhedra*.
Finally, let us mention briefly *axisymmetric domains* of $\mathbb{R}^3$, which are generated by the rotation of a polygon around one of its edges (these will be of use

in Chapter 9). More precisely, the rotation occurs around a line, the so-called axis, that contains this edge.

Remark 2.1.33 *In general, an axisymmetric domain is not a curved polyhedron, because the rotation of each of the two edges that intersect the axis generates a cone with a circular base, unless there is a right angle at the corresponding vertex.*

Loosely speaking again, we note that the boundary of a curved polyhedron or of an axisymmetric domain is a manifold with corners and edges.

The sets of curvilinear polygons, curved polyhedra and axisymmetric domains form three important subcategories of (C3), in the sense that it is possible to get more precise, and often more explicit, results than for the "general" domains of (C3).

In open sets that belong to the category (C3), one can nevertheless establish many useful results.

Let us begin with a result that is sometimes called the Lions' Lemma.

Theorem 2.1.34 *In a domain Ω, it holds that, algebraically and topologically,*

$$L^2(\Omega) = \{f \in H^{-1}(\Omega) \ : \ \partial_j f \in H^{-1}(\Omega),\, j = 1, \cdots, n\}\,;$$
$$L^2(\Omega) = \{f \in L^2_{loc}(\Omega) \ : \ \partial_j f \in H^{-1}(\Omega),\, j = 1, \cdots, n\}.$$

Let us continue with the definition of equivalent norms on $H^m_0(\Omega)$, which stems from the famous *Poincaré inequalities*.

Theorem 2.1.35 *Let $m \geq 1$. Given a domain Ω, there exists a constant C_m, which depends only on Ω, such that*

$$\forall f \in H^m_0(\Omega), \quad \|f\|_{H^m(\Omega)} \leq C_m\, |f|_{H^m(\Omega)}.$$

NB. It is enough to assume that Ω belongs to the category (C2), and that it is bounded in one direction ($\exists \boldsymbol{e} \in \mathbb{R}^n$ such that $-\infty < \inf_{\boldsymbol{x}\in\Omega} \boldsymbol{x}\cdot\boldsymbol{e} < \sup_{\boldsymbol{x}\in\Omega} \boldsymbol{x}\cdot\boldsymbol{e} < +\infty$), to prove the claim in Theorem 2.1.35.
Accordingly,

Corollary 2.1.36 *Let $m \geq 1$. Given a domain Ω, $\|\cdot\|_{H^m(\Omega)}$ and $|\cdot|_{H^m(\Omega)}$ are equivalent norms on $H^m_0(\Omega)$.*

In $H^m(\Omega)$, one can further prove the so-called *Poincaré-Wirtinger inequality*.

Theorem 2.1.37 *Let $m \geq 1$. Given a domain Ω, there exists a constant C'_m, which depends only on Ω, such that*

$$\forall f \in H^m(\Omega), \quad \|f\|_{H^m(\Omega)} \leq C'_m \left\{ |f|^2_{H^m(\Omega)} + \sum_{\alpha\in\mathbb{N}^n,\ |\alpha|<m} \left| \int_\Omega \partial_\alpha f \, d\boldsymbol{x} \right|^2 \right\}^{1/2}.$$

In practice, one uses the Poincaré-Wirtinger inequality in the subspace

$$H^1_{zmv}(\Omega) := \{f \in H^1(\Omega) \,:\, (f|1) = 0\}.$$

From now on, the index $_{zmv}$ generically indicates that one considers the subspace made of zero mean value fields, such as $L^2_{zmv}(\Omega)$, $H^1_{zmv}(\Omega)$, etc.
In a domain Ω, one can prove (cf. [198]) that the Definition 2.1.17 of the fractional-order spaces $H^s(\Omega)$ coincides algebraically and topologically with the definition below, where the norm is explicit.

Definition 2.1.38 *Let $s \in \mathbb{R}_+ \setminus \mathbb{N}$, and write $s = m + \sigma$, with $(m, \sigma) \in \mathbb{N}\times]0,1[$. The space $H^s(\Omega)$ is composed of elements f of $H^m(\Omega)$, such that*

$$|f|_{H^s(\Omega)} := \left\{ \sum_{\alpha\in\mathbb{N}^n,\ |\alpha|=m} \int_\Omega \int_\Omega \frac{|\partial_\alpha f(\boldsymbol{x}) - \partial_\alpha f(\boldsymbol{y})|^2}{|\boldsymbol{x}-\boldsymbol{y}|^{n+2\sigma}} d\boldsymbol{x}\, d\boldsymbol{y} \right\}^{1/2} < \infty. \quad (2.7)$$

Let

$$\|f\|_{H^s(\Omega)} := \left\{ \|f\|^2_{H^m(\Omega)} + |f|^2_{H^s(\Omega)} \right\}^{1/2}. \quad (2.8)$$

Endowed with the norm $\|\cdot\|_{H^s(\Omega)}$, $H^s(\Omega)$ is a Banach space.
It is a Hilbert space, endowed with the scalar product

$$(f,g)_{H^s(\Omega)} := (f,g)_{H^m(\Omega)} + \sum_{\alpha\in\mathbb{N}^n,\ |\alpha|=m} \int_\Omega \int_\Omega \frac{(\partial_\alpha f(\boldsymbol{x}) - \partial_\alpha f(\boldsymbol{y}))(\overline{\partial_\alpha g(\boldsymbol{x}) - \partial_\alpha g(\boldsymbol{y})})}{|\boldsymbol{x}-\boldsymbol{y}|^{n+2\sigma}} d\boldsymbol{x}\, d\boldsymbol{y}.$$

Remark 2.1.39 *One can compare the semi-norms $(|\cdot|_{H^s(\Omega)})_{s\in]0,1[}$ to the semi-norm $|\cdot|_{H^1(\Omega)}$, provided Ω is a domain. Following [61], one can prove that*

$$\exists C_1, C_2 > 0,\ \forall f \in H^1(\Omega), \quad C_1|f|_{H^1(\Omega)} \leq \lim_{s\to 1}(1-s)|f|_{H^s(\Omega)} \leq C_2|f|_{H^1(\Omega)}.$$

For the comparison to hold, one must include the $(1-s)$ multiplicative factor in the limit.

Remark 2.1.40 *One can also introduce the series of Sobolev spaces based on $L^p(\Omega)$, with $1 \leq p \leq \infty$. This results in the well-known $W^{s,p}(\Omega)$, for $s \geq 0$. Then, 2 (respectively 1/2) is replaced by p (respectively $1/p$) in (2.3), (2.4), (2.7) and (2.8). When $1 < p < \infty$, these function spaces are separable, reflexive Banach spaces and, for $p = 2$, they are Hilbert spaces: in this case, one has $W^{s,2}(\Omega) = H^s(\Omega)$ algebraically and topologically. Afterwards,*

one defines the dual spaces $W^{-s,p'}(\Omega)$ *of* $W_0^{s,p}(\Omega)$ *(the closure of* $\mathcal{D}(\Omega)$ *in* $W^{s,p}(\Omega)$*), with the conjugate exponent* p' *s.t.* $1/p + 1/p' = 1$*. Also, one can identify* $W^{1,\infty}(\Omega)$ *with* $C^{0,1}(\overline{\Omega})$*, the space of Lipschitz-continuous functions on* $\overline{\Omega}$*. However, since most problems in this book are accurately resolved with the help of the* $(H^s(\Omega))_{s\in\mathbb{R}}$ *series of spaces, we shall concentrate on them.*

One can establish *imbedding* results: *continuous* imbeddings, also called *Sobolev imbeddings*, and *compact* imbeddings.

Proposition 2.1.41 *In a domain* Ω*, it holds that, algebraically and topologically, for* $s > n/2$*:*

- $H^s(\Omega) \subset C^k(\overline{\Omega})$*, for* $k \in \mathbb{N}$ *such that* $k < s - n/2$*;*
- $H^s(\Omega) \subset C^{k,\beta}(\overline{\Omega})$*, for* $k \in \mathbb{N}$ *such that* $k < s - n/2 < k + 1$*, and* $\beta = s - n/2 - k$*.*

We recall that the scale of Sobolev spaces is defined "recursively" by differentiation. Let us note that differentiation loses *exactly* one order, in the following manner.

Proposition 2.1.42 *Let* Ω *be a domain. Then:*

- $\partial_i \ : \ H^s(\Omega) \to H^{s-1}(\Omega)$ *is continuous, for* $s \in \mathbb{R} \setminus \{1/2\}$*.*
- $\partial_i \ : \ H^{1/2}(\Omega) \to \widetilde{H}^{-1/2}(\Omega)$ *is continuous.*

As far as compact imbeddings (denoted by $\subset_c$) are concerned, one has the results below.

Proposition 2.1.43 *In a domain* Ω*, it holds that*

$$H^{s'}(\Omega) \subset_c H^{s''}(\Omega), \ \textit{for } s', s'' \in \mathbb{R}, \ s' > s''.$$

Let us now categorize the series of Sobolev spaces $H^s(\Omega)$, $H_0^s(\Omega)$ and $\widetilde{H}^s(\Omega)$, for $s \geq 0$. In the process, some useful results are derived.

Proposition 2.1.44 *In a domain* Ω*, it holds that*

- $H_0^s(\Omega) = H^s(\Omega)$*, for all* $1/2 \geq s \geq 0$*;*
- $H_0^s(\Omega)$ *is strictly included in* $H^s(\Omega)$*, for all* $s > 1/2$*;*
- $\widetilde{H}^s(\Omega) = [H_0^{s+1/2}(\Omega), H_0^{s-1/2}(\Omega)]_{1/2}$*, for all* $s \geq 0$*, such that* $s + 1/2 \in \mathbb{N}$*.*

By direct computations, one can bound integrals that appear in the definition of fractional-order Sobolev spaces, cf. (2.7).

Definition 2.1.45 *Let* Ω *be a domain, with boundary* Γ*.*
The distance to the boundary ρ_Γ *is defined by:*

$$\rho_\Gamma(\boldsymbol{x}) := \inf_{\boldsymbol{y}\in\Gamma} |\boldsymbol{x} - \boldsymbol{y}|.$$

Lemma 2.1.46 *In a domain Ω, one has $\rho_\Gamma \in W^{1,\infty}(\Omega)$.*
Let $\sigma \in [0,1[$. There exist two constants $C_\sigma \geq c_\sigma > 0$ such that

$$\forall \boldsymbol{x} \in \Omega, \quad c_\sigma \rho_\Gamma(\boldsymbol{x})^{-2\sigma} \leq \int_{\mathbb{R}^n \setminus \overline{\Omega}} \frac{d\boldsymbol{y}}{|\boldsymbol{x}-\boldsymbol{y}|^{n+2\sigma}} \leq C_\sigma \rho_\Gamma(\boldsymbol{x})^{-2\sigma}.$$

This result has two important consequences. The first one is an alternate definition of $\widetilde{H}^s(\Omega)$. The second one concerns the equivalence between piecewise–H^s and H^s fields (see Definition 2.1.48 and Corollary 2.1.49 hereafter).

Proposition 2.1.47 *Let $s \geq 0$, and write $s = m + \sigma$, with $\sigma \in [0,1[$. In a domain Ω, one can define $\widetilde{H}^s(\Omega)$ by*

$$\widetilde{H}^s(\Omega) := \{f \in H_0^s(\Omega) \ : \ \frac{\partial_\alpha f}{\rho_\Gamma^\sigma} \in L^2(\Omega), \ \forall \alpha \in \mathbb{N}^n, \ |\alpha| = m\}.$$

Furthermore, one has:

- *$\widetilde{H}^s(\Omega) = H_0^s(\Omega)$, for all $s \geq 0$, such that $s + 1/2 \notin \mathbb{N}$;*
- *$\widetilde{H}^s(\Omega)$ is strictly included in $H_0^s(\Omega)$, for all $s \geq 0$, such that $s + 1/2 \in \mathbb{N}$.*

The last statement contains a justification of the need for the spaces $\widetilde{H}^s$ (apart from a purely mathematical interest!). As a matter of fact, they are needed when the exponent is equal to $s = 1/2$ in many situations, especially when one considers functions, which are defined on a part of the boundary. For instance, the characteristic function χ_Ω belongs to $H^{1/2}(\Omega) = H_0^{1/2}(\Omega)$, whereas it is readily checked that $\chi_\Omega \notin \widetilde{H}^{1/2}(\Omega)$, according to Corollary 2.1.49 below. Before that, let us introduce the notion of the *partition* of a domain.

Definition 2.1.48 *Let Ω be a domain. A* partition *of Ω, $\mathcal{P} := (\Omega_p)_{1 \leq p \leq P}$, is such that:*

- *Ω_p is a domain, for $1 \leq p \leq P$;*
- *$\Omega_p \cap \Omega_q = \emptyset$ for $p \neq q$;*
- *$\overline{\Omega} = \cup_{1 \leq p \leq P} \overline{\Omega_p}$.*

We also introduce the corresponding set $\mathcal{F}$ of interfaces *(here, only the manifolds of dimension $n-1$ are kept), indexed by pairs of indices: an element Σ_{pq} of $\mathcal{F}$ is characterized by $1 \leq p \neq q \leq P$ such that $\Sigma_{pq} = \partial\Omega_p \cap \partial\Omega_q$, and $\mathcal{N}_I$ denotes the set of pairs of indices that correspond to an interface.*
Finally, for $s \in [0, +\infty]$, $PH^s(\Omega, \mathcal{P})$ is the set of piecewise–H^s functions *(with the notation $H^\infty = C^\infty$), with respect to the partition $\mathcal{P}$:*

$$PH^s(\Omega, \mathcal{P}) := \{f \in L^2(\Omega) \ : \ f_{|\Omega_p} \in H^s(\Omega_p), \ 1 \leq p \leq P\}.$$

Corollary 2.1.49 *Let Ω be a domain, and $\mathcal{P} := (\Omega_p)_{1 \leq p \leq P}$ a partition of Ω:*

- *If $s \in [0, 1/2[$, $H^s(\Omega) = PH^s(\Omega, \mathcal{P})$;*
- *If $s \geq 1/2$, $H^s(\Omega)$ is a* strict *subset of $PH^s(\Omega, \mathcal{P})$.*

Let us now focus on functions defined on the boundary Γ of a domain Ω.

Remark 2.1.50 *Before we proceed, let us remark that all results below, which deal with function spaces defined on the boundary or with trace mappings, are also valid for* exterior domains*, that is, open sets $\Omega = \mathbb{R}^n \setminus \overline{\Omega}_0$, Ω_0 being a domain of $\mathbb{R}^n$.*

Let $d\Gamma$ denote the usual Lebesgue measure on the surface Γ. Introduce...

Definition 2.1.51 *The space $L^2(\Gamma)$ is composed of all complex-valued, Lebesgue-measurable functions f on Γ such that*

$$\|f\|_{L^2(\Gamma)} := \left\{ \int_\Gamma |f|^2 \, d\Gamma \right\}^{1/2} < \infty.$$

Endowed with the norm $\|\cdot\|_{L^2(\Gamma)}$, $L^2(\Gamma)$ is a Banach space. In addition, it is a Hilbert space, endowed with the scalar product

$$(f, g)_{L^2(\Gamma)} := \int_\Gamma f \, \overline{g} \, d\Gamma.$$

One can then further define, for suitable s, some Sobolev spaces on Γ.

Definition 2.1.52 *Let $s \in]0, 1[$.*
The space $H^s(\Gamma)$ is composed of elements f of $L^2(\Gamma)$ such that

$$|f|_{H^s(\Gamma)} := \left\{ \int_\Gamma \int_\Gamma \frac{|f(\boldsymbol{x}) - f(\boldsymbol{y})|^2}{|\boldsymbol{x} - \boldsymbol{y}|^{n-1+2s}} d\Gamma(\boldsymbol{x}) \, d\Gamma(\boldsymbol{y}) \right\}^{1/2} < \infty.$$

Let

$$\|f\|_{H^s(\Gamma)} := \left\{ \|f\|^2_{L^2(\Gamma)} + |f|_{H^s(\Gamma)^2} \right\}^{1/2}.$$

Endowed with the norm $\|\cdot\|_{H^s(\Gamma)}$, $H^s(\Gamma)$ is a Banach space.
The dual space of $H^s(\Gamma)$ is called $H^{-s}(\Gamma)$. Its canonical norm is denoted by $\|\cdot\|_{H^{-s}(\Gamma)}$.

Let us now focus on H^s Sobolev spaces on (a part of) the boundary, for $s \in]0, 1[$. First, we note that they can indeed be defined on an open subset Γ' of the boundary, using the above Definition, with Γ' instead of Γ.

Definition 2.1.53 *Let Ω be a domain with boundary Γ, and let Γ' denote an open subset of Γ with $meas_\Gamma(\Gamma') > 0$ such that its boundary is a Lipschitz submanifold of Γ (of dimension $n - 2$). We denote by $\widetilde{H}^{1/2}(\Gamma')$ the space composed of elements of $H^{1/2}(\Gamma')$ such that their continuation by zero belongs to $H^{1/2}(\Gamma)$. Its dual space is denoted by $\widetilde{H}^{-1/2}(\Gamma')$.*

Let us consider the practical case of a curved polyhedron Ω, with $s = 1/2$.

Definition 2.1.54 *Let Ω be a curved polyhedron, with a boundary Γ made of smooth faces, labeled $(\Gamma_j)_{1\leq j\leq N_\Gamma}$. The restriction to a face Γ_j of the normal vector $\boldsymbol{n}$ (respectively an element f of $L^2(\Gamma)$) is denoted by $\boldsymbol{n}_j$ (respectively f_j).*
Let Ω be a polyhedral domain. When two faces possess a common edge, it is denoted by $e_{ij} = \overline{\Gamma}_i \cap \overline{\Gamma}_j$, and one can choose a unit vector $\boldsymbol{\tau}_{ij}$ parallel to e_{ij}. Furthermore, one can introduce $\boldsymbol{\tau}_i(j) = \boldsymbol{\tau}_{ij} \times \boldsymbol{n}_i$, so that $(\boldsymbol{\tau}_i(j), \boldsymbol{\tau}_{ij}, \boldsymbol{n}_i)$ is an orthonormal basis of $\mathbb{R}^3$. The set of pairs (i,j) such that $\overline{\Gamma}_i \cap \overline{\Gamma}_j$ is an edge is denoted by $\mathcal{N}_E$.

NB. When $\overline{\Gamma}_i \cap \overline{\Gamma}_j$ is not empty (for $i \neq j$), it is either an edge or a vertex.

Definition 2.1.55 *Let Ω be a curved polyhedron, with the notations of Definition 2.1.54. Let $H_-^{1/2}(\Gamma)$ be the function space*

$$H_-^{1/2}(\Gamma) := \{f \in L^2(\Gamma) \ : \ f_j \in H^{1/2}(\Gamma_j), \ 1 \leq j \leq N_\Gamma\}.$$

Let $(i,j) \in \mathcal{N}_E$. Given $f \in H_-^{1/2}(\Gamma)$, one writes $f_i \overset{1/2}{=} f_j$ if, and only if,

$$\int_{\Gamma_i}\int_{\Gamma_j} \frac{|f_i(\boldsymbol{x}) - f_j(\boldsymbol{y})|^2}{|\boldsymbol{x}-\boldsymbol{y}|^3} d\Gamma(\boldsymbol{x})\, d\Gamma(\boldsymbol{y}) < \infty.$$

One can prove (cf. [67])

Proposition 2.1.56 *Let Ω be a curved polyhedron, with the notations of Definition 2.1.54. Let $\overline{\Gamma}_i$ and $\overline{\Gamma}_j$ share only a common vertex. Then, for all $f \in H_-^{1/2}(\Gamma)$, it holds that*

$$\int_{\Gamma_i}\int_{\Gamma_j} \frac{|f(\boldsymbol{x}) - f(\boldsymbol{y})|^2}{|\boldsymbol{x}-\boldsymbol{y}|^3} d\Gamma(\boldsymbol{x})\, d\Gamma(\boldsymbol{y}) < \infty.$$

One infers from this Proposition an alternative definition of the space $H^{1/2}(\Gamma)$...

Corollary 2.1.57 *Let Ω be a curved polyhedron, with the notations of Definition 2.1.54 and Definition 2.1.55. One has*

$$H^{1/2}(\Gamma) := \{f \in H_-^{1/2}(\Gamma) \ : \ f_i \overset{1/2}{=} f_j, \ \forall (i,j) \in \mathcal{N}_E\}.$$

Remark 2.1.58 *To summarize, the values on two adjacent faces of elements of $H^{1/2}(\Gamma)$ are not correlated, provided that the two faces share only a vertex. On the other hand, it is clear that they are correlated, when they share an edge. The correlation is explained below, in the particular case when the element vanishes on one face. For more general results on compatibility conditions for elements of $H^s(\Gamma)$, see [124, 46].*

Proposition 2.1.59 *Let Ω be a curved polyhedron, and let Γ_1 be a face of its boundary. The space $\widetilde{H}^{1/2}(\Gamma_1)$ is equal to*

$$\widetilde{H}^{1/2}(\Gamma_1) = \{f \in H^{1/2}(\Gamma_1) \ : \ \frac{f}{\sqrt{\rho_{\partial\Gamma_1}}} \in L^2(\Gamma_1)\},$$

where $\rho_{\partial\Gamma_1}$ is the distance to the boundary $\partial\Gamma_1$.

Let us consider again any domain Ω with boundary Γ, and let Γ' be an open subset of Γ, with $meas_\Gamma(\Gamma') > 0$, such that its boundary is a Lipschitz submanifold of Γ: one can define the space $\widetilde{H}^{1/2}(\Gamma')$ as in Definition 2.1.53. Moreover, one notices that if $f \in H^{-1/2}(\Gamma)$, its restriction to Γ', denoted by $f_{|\Gamma'}$, naturally belongs to $\widetilde{H}^{-1/2}(\Gamma')$, according to

$$\forall g \in \widetilde{H}^{1/2}(\Gamma'), \quad \langle f_{|\Gamma'}, g\rangle_{\widetilde{H}^{1/2}(\Gamma')} = \langle f, \tilde{g}\rangle_{H^{1/2}(\Gamma)}, \tag{2.9}$$

where $\tilde{g}$ is the continuation of g by zero to the whole boundary Γ.
On the other hand, one has the result below.[4]

Proposition 2.1.60 *Let Ω be a domain with boundary Γ, let Γ' be an open subset of Γ, with $0 < meas_\Gamma(\Gamma') < meas_\Gamma(\Gamma)$, such that its boundary is a Lipschitz submanifold of Γ, and let $\Gamma'' = int(\Gamma \setminus \Gamma')$.*
Let $f \in H^{-1/2}(\Gamma)$. Then, one has $f_{|\Gamma'} \in H^{-1/2}(\Gamma')$ if, and only if, $f_{|\Gamma''} \in H^{-1/2}(\Gamma'')$. In this case, one can write

$$\forall g \in H^{1/2}(\Gamma), \quad \langle f, g\rangle_{H^{1/2}(\Gamma)} = \langle f_{|\Gamma'}, g_{|\Gamma'}\rangle_{H^{1/2}(\Gamma')} + \langle f_{|\Gamma''}, g_{|\Gamma''}\rangle_{H^{1/2}(\Gamma'')}.$$

Moreover, for some $C > 0$, which depends only on Γ and Γ':

$$\|f_{|\Gamma'}\|_{H^{-1/2}(\Gamma')} \leq C \left(\|f\|_{H^{-1/2}(\Gamma)} + \|f_{|\Gamma''}\|_{H^{-1/2}(\Gamma'')}\right).$$

The next result establishes the existence of traces of elements of $H^s(\Omega)$ on the boundary Γ, for suitably chosen s (see [112] for the special case $s = 1$).

Definition 2.1.61 *Let Ω be a domain. Let f be a smooth function defined on $\overline{\Omega}$. Its trace $f_{|\Gamma}$ on the boundary Γ is denoted by $\gamma_0 f$, and γ_0 is called the trace mapping.*

Theorem 2.1.62 *Let Ω be a domain, and let $s \in]1/2, 1]$. The mapping γ_0 has a unique continuous extension, from $H^s(\Omega)$ to $H^{s-1/2}(\Gamma)$, which is surjective. In addition, the following characterization holds:*

$$H^s_0(\Omega) = \{f \in H^s(\Omega) \ : \ f_{|\Gamma} = 0\}.$$

Remark 2.1.63 *Since we assume only Lipschitz regularity of the boundary, one cannot define the trace mapping of the normal derivative $f \mapsto \mathbf{grad}\, f \cdot \boldsymbol{n}_{|\Gamma}$*

[4] Given any subset S of $\mathbb{R}^n$, $int(S)$ denotes the *interior* of S.

from $H^2(\Omega)$ to $H^{1/2}(\Gamma)$. Indeed, assume that Ω is a curved polyhedron, and consider $f \in H^2(\Omega)$. One sees easily that, for $1 \leq j \leq N_\Gamma$, $\mathbf{grad}\, f \cdot \boldsymbol{n}_{|\Gamma_j}$ belongs to $H^{1/2}(\Gamma_j)$. But the values on two adjacent faces (sharing an edge) are uncorrelated. According to Corollary 2.1.57, $\gamma_1 f$ does not belong to $H^{1/2}(\Gamma)$. However, one can still define a trace mapping of the normal derivative with values in $H^{-1/2}(\Gamma)$ (see Corollary 2.2.20 in the next section). On the other hand, if the boundary is $C^{1,1}$, then this trace mapping actually goes from $H^2(\Omega)$ to $H^{1/2}(\Gamma)$.

Remark 2.1.64 *In the same spirit, one can also characterize the spaces $H_0^s(\Omega)$ for $s > 1$, provided Ω is a curvilinear polygon, a curved polyhedron or an axisymmetric domain. It holds that (cf. [92])*

$$H_0^s(\Omega) = \{f \in H^s(\Omega) \ : \ \frac{\partial^k f}{\partial n^k}_{|\Gamma} = 0, \ \forall k \in \mathbb{N}, \, k < s - 1/2\}.$$

Above, the definition of the trace of the normal derivative of order k is

$$\frac{\partial^k f}{\partial n^k} = k! \sum_{\alpha \in \mathbb{N}^n, |\alpha| = k} \frac{1}{\alpha!} \partial_\alpha f \, n^\alpha \, ,$$

where $\alpha! = \alpha_1! \cdots \alpha_n!$ and $n^\alpha = n_1^{\alpha_1} \cdots n_n^{\alpha_n}$. For instance, for $s \in]3/2, 5/2[$, one has

$$H_0^s(\Omega) = \{f \in H^s(\Omega) \ : f_{|\Gamma} = 0, \ \mathbf{grad}\, f \cdot \boldsymbol{n}_{|\Gamma} = 0\}.$$

Definition 2.1.65 *Let Ω be a domain with boundary Γ. Let Γ' be an open subset of Γ such that its boundary is a Lipschitz submanifold of Γ, with $meas_\Gamma(\Gamma') > 0$. Introduce*

$$C_{\Gamma'}^\infty(\overline{\Omega}) := \{f \in C^\infty(\overline{\Omega}) \ : \ f = 0 \text{ in a neighborhood of } \Gamma'\}.$$

Then, one can define, for $s \in]1/2, 3/2[$,

$$H_{0,\Gamma'}^s(\Omega) := \text{closure of } C_{\Gamma'}^\infty(\overline{\Omega}) \text{ in } H^s(\Omega)\,;$$

furthermore, it holds that

$$H_{0,\Gamma'}^s(\Omega) = \{f \in H^s(\Omega) \ : \ f_{|\Gamma'} = 0\}.$$

Also, one can prove another *Poincaré inequality*, set in $H_{0,\Gamma'}^1(\Omega)$.

Proposition 2.1.66 *Let Ω be a domain with boundary Γ. Let Γ' be an open subset of Γ, with $meas_\Gamma(\Gamma') > 0$. Then, there exists a constant C_1, which depends only on Ω and Γ' such that*

$$\forall f \in H_{0,\Gamma'}^1(\Omega), \quad \|f\|_{H^1(\Omega)} \leq C_1 \, |f|_{H^1(\Omega)}.$$

Whenever applicable, we shall use the subscript $_{per}$ to label subspaces composed of elements with periodic traces.
Finally, let us conclude with a classical result, which uses traces on parts of the boundary, and which can be seen as a complement to Corollary 2.1.49.

Definition 2.1.67 *Let Ω be a domain partitioned into $\mathcal{P} := (\Omega_p)_{p=+,-}$. Let $\Sigma = \partial\Omega_+ \cap \partial\Omega_-$ be the* interface *separating Ω_+ and Ω_-. Denote by $\boldsymbol{n}_+$ (respectively $\boldsymbol{n}_-$) the unit outward normal vector field to $\partial\Omega_+$ (respectively $\partial\Omega_-$). Denote by $\boldsymbol{n}_\Sigma$ a unit normal vector field to Σ, and define*

$$\delta_\Sigma^+ := \begin{cases} +1 \text{ if } \boldsymbol{n}_+ = \boldsymbol{n}_\Sigma \text{ on } \Sigma \\ -1 \text{ if } \boldsymbol{n}_+ = -\boldsymbol{n}_\Sigma \text{ on } \Sigma \end{cases}, \qquad \delta_\Sigma^- := \begin{cases} +1 \text{ if } \boldsymbol{n}_- = \boldsymbol{n}_\Sigma \text{ on } \Sigma \\ -1 \text{ if } \boldsymbol{n}_- = -\boldsymbol{n}_\Sigma \text{ on } \Sigma \end{cases}.$$

Given $f \in PH^s(\Omega, \mathcal{P})$ for $s > 1/2$, the jump *of f through Σ is equal to*

$$[f]_\Sigma := \delta_\Sigma^+ \gamma_{0,+} f + \delta_\Sigma^- \gamma_{0,-} f.$$

The jump is understood as a difference, because $\delta_\Sigma^+ = -\delta_\Sigma^-$.

Proposition 2.1.68 *Let Ω be a domain partitioned into $\mathcal{P} := (\Omega_p)_{1 \le p \le P}$, and let $\mathcal{F}$ denote the set of interfaces. For $s \in]1/2, 1]$, it holds that*

$$H^s(\Omega) = \{f \in PH^s(\Omega, \mathcal{P}) \ : \ [f]_{\Sigma_{pq}} = 0, \ \forall (p,q) \in \mathcal{N}_I\}.$$

NB. To handle the case $s = 1/2$, one needs some *ad hoc* theory, see, for instance, Corollary 2.1.57.

2.2 Vector fields: standard function spaces

In this section, since electromagnetic fields are considered, unless otherwise specified, we stand explicitly in $\Omega = \mathbb{R}^3$, or in an open subset Ω of $\mathbb{R}^3$.
In what follows, we use $\mathfrak{k}$ defined on Ω, and such that

$$\begin{aligned} &\mathfrak{k} \in \mathbb{L}^\infty(\Omega) \quad \text{and} \quad \mathfrak{k}^{-1} \in \mathbb{L}^\infty(\Omega), \quad \text{i.e.,} \\ &(\mathfrak{k})_{i,j} \in L^\infty(\Omega) \text{ and } (\mathfrak{k}^{-1})_{i,j} \in L^\infty(\Omega), \ 1 \le i,j \le 3. \end{aligned} \tag{2.10}$$

2.2.1 Elementary results

Let us introduce our first space of vector fields,

$$\boldsymbol{D}(\Omega) := \{\boldsymbol{g} \ : \ g_j \in \mathcal{D}(\Omega), \ j = 1,2,3\}.$$

Looking at Eqs. (1.6-1.9), one sees that Sobolev spaces like $H^1(\Omega)$ are not explicitly required, since the first-order differential operators that appear are not the gradient, but rather the curl and divergence. More precisely, all partial derivatives of the electromagnetic fields are used, but they appear in *linear combinations*, if one recalls that

$$\operatorname{div} \boldsymbol{v} = \frac{\partial v_1}{\partial x_1} + \frac{\partial v_2}{\partial x_2} + \frac{\partial v_3}{\partial x_3}, \quad \mathbf{curl}\, \boldsymbol{v} = \begin{pmatrix} \dfrac{\partial v_3}{\partial x_2} - \dfrac{\partial v_2}{\partial x_3} \\ \dfrac{\partial v_1}{\partial x_3} - \dfrac{\partial v_3}{\partial x_1} \\ \dfrac{\partial v_2}{\partial x_1} - \dfrac{\partial v_1}{\partial x_2} \end{pmatrix},$$

together with the formula $\operatorname{div}(\boldsymbol{v} \times \boldsymbol{w}) = \boldsymbol{w} \cdot \mathbf{curl}\, \boldsymbol{v} - \boldsymbol{v} \cdot \mathbf{curl}\, \boldsymbol{w}$.
For any smooth vector field $\boldsymbol{v}$, the pointwise inequalities hold:

$$|\operatorname{div} \boldsymbol{v}(\boldsymbol{x})|^2 \leq \left(\sum_{1 \leq i \leq 3} \left| \frac{\partial v_i}{\partial x_i}(\boldsymbol{x}) \right| \right)^2 \leq 3 |\, \mathbf{Grad}\, \boldsymbol{v}(\boldsymbol{x})|^2, \tag{2.11}$$

$$|\, \mathbf{curl}\, \boldsymbol{v}(\boldsymbol{x})|^2 \leq 2 \sum_{1 \leq i,j \leq 3,\ i \neq j} \left| \frac{\partial v_i}{\partial x_j}(\boldsymbol{x}) \right|^2 \leq 2 |\, \mathbf{Grad}\, \boldsymbol{v}(\boldsymbol{x})|^2, \tag{2.12}$$

with $(\mathbf{Grad}\, \boldsymbol{v}(\boldsymbol{x}))_{i,j} = \dfrac{\partial v_i}{\partial x_j}(\boldsymbol{x}),\ 1 \leq i,j \leq 3,\ |\, \mathbf{Grad}\, \boldsymbol{v}(\boldsymbol{x})|^2 = \displaystyle\sum_{1 \leq i,j \leq 3} \left| \frac{\partial v_i}{\partial x_j}(\boldsymbol{x}) \right|^2.$

This being remarked, let us note that the Sobolev space $H^1(\Omega)$ is useful, and especially the space of its traces $H^{1/2}(\Gamma)$, since it is of fundamental importance in the definition and characterization of traces of the electromagnetic fields.

Definition 2.2.1 *Let $1 \leq p \leq \infty$. The spaces $\boldsymbol{L}^p(\Omega) := \{\boldsymbol{v} \ : \ v_i \in L^p(\Omega),\ i = 1,2,3\}$ are Banach spaces. They are separable, with the exception of $\boldsymbol{L}^\infty(\Omega)$.*

In particular, $\boldsymbol{L}^2(\Omega)$ is a Hilbert space, endowed with the scalar product

$$(\boldsymbol{v}|\boldsymbol{w}) := \int_\Omega \boldsymbol{v} \cdot \overline{\boldsymbol{w}}\, d\boldsymbol{x}.$$

Definition 2.2.2 *Let $s \in \mathbb{R}_+$. The spaces below are separable Hilbert spaces:*

- $\boldsymbol{H}^s(\Omega) := \{\boldsymbol{v} \ : \ v_i \in H^s(\Omega),\ i = 1,2,3\}$.
- $\boldsymbol{H}(\mathbf{curl}, \Omega) := \{\boldsymbol{v} \in \boldsymbol{L}^2(\Omega) \ : \ \mathbf{curl}\, \boldsymbol{v} \in \boldsymbol{L}^2(\Omega)\}$, *where the curl is taken in the sense of distributions. The canonical norm is*

$$\|\boldsymbol{v}\|_{\boldsymbol{H}(\mathbf{curl},\Omega)} := \left\{ \int_\Omega (|\boldsymbol{v}|^2 + |\, \mathbf{curl}\, \boldsymbol{v}|^2)\, d\boldsymbol{x} \right\}^{1/2}. \tag{2.13}$$

- $\boldsymbol{H}(\mathbf{curl}\, \mathfrak{k}, \Omega) := \{\boldsymbol{v} \in \boldsymbol{L}^2(\Omega) \ : \ \mathbf{curl}\, \mathfrak{k}\boldsymbol{v} \in \boldsymbol{L}^2(\Omega)\}$, *where the curl of $\mathfrak{k}\boldsymbol{v}$ is taken in the sense of distributions. The canonical norm is*

$$\|\boldsymbol{v}\|_{\boldsymbol{H}(\mathbf{curl}\, \mathfrak{k},\Omega)} := \left\{ \int_\Omega (|\boldsymbol{v}|^2 + |\, \mathbf{curl}\, \mathfrak{k}\boldsymbol{v}|^2)\, d\boldsymbol{x} \right\}^{1/2}. \tag{2.14}$$

- $\boldsymbol{H}(\mathrm{div},\Omega) := \{\boldsymbol{v} \in \boldsymbol{L}^2(\Omega) \ : \ \mathrm{div}\,\boldsymbol{v} \in L^2(\Omega)\}$, *where the divergence is taken in the sense of distributions. The canonical norm is*

$$\|\boldsymbol{v}\|_{\boldsymbol{H}(\mathrm{div},\Omega)} := \left\{ \int_\Omega (|\boldsymbol{v}|^2 + |\,\mathrm{div}\,\boldsymbol{v}|^2)\, d\boldsymbol{x} \right\}^{1/2}. \tag{2.15}$$

- $\boldsymbol{H}(\mathrm{div}\,\mathfrak{k},\Omega) := \{\boldsymbol{v} \in \boldsymbol{L}^2(\Omega) \ : \ \mathrm{div}\,\mathfrak{k}\boldsymbol{v} \in L^2(\Omega)\}$, *where the divergence of* $\mathfrak{k}\boldsymbol{v}$ *is taken in the sense of distributions. The canonical norm is*

$$\|\boldsymbol{v}\|_{\boldsymbol{H}(\mathrm{div}\,\mathfrak{k},\Omega)} := \left\{ \int_\Omega (|\boldsymbol{v}|^2 + |\,\mathrm{div}\,\mathfrak{k}\boldsymbol{v}|^2)\, d\boldsymbol{x} \right\}^{1/2}. \tag{2.16}$$

- $\boldsymbol{L}^2(\Gamma) := \{\boldsymbol{v} \ : \ v_i \in L^2(\Gamma), \ i = 1,2,3\}$.
- $\boldsymbol{H}^s(\Gamma) := \{\boldsymbol{v} \ : \ v_i \in H^s(\Gamma), \ i = 1,2,3\}$.

Let $s \in]0,1/2[$. *The spaces below are separable Hilbert spaces:*

$\boldsymbol{H}_{-s}(\mathrm{div},\Omega) := \{\boldsymbol{v} \in \boldsymbol{L}^2(\Omega) \ : \ \mathrm{div}\,\boldsymbol{v} \in H^{-s}(\Omega)\}$.

The canonical norm is

$$\|\boldsymbol{v}\|_{\boldsymbol{H}_{-s}(\mathrm{div},\Omega)} := \left\{ \int_\Omega |\boldsymbol{v}|^2\, d\boldsymbol{x} + \|\,\mathrm{div}\,\boldsymbol{v}\|^2_{H^{-s}(\Omega)} \right\}^{1/2}.$$

Using (2.11) and (2.12) together with Proposition 2.1.28, one immediately gets the imbedding results below.

Proposition 2.2.3 *The space* $\boldsymbol{H}^1(\Omega)$ *is continuously imbedded in* $\boldsymbol{H}(\mathbf{curl},\Omega)$ *and in* $\boldsymbol{H}(\mathrm{div},\Omega)$.

NB. Let us point out that one has to be careful with "reverse" imbeddings, since $\boldsymbol{H}(\mathrm{div},\Omega) \cap \boldsymbol{H}(\mathbf{curl},\Omega)$ is only imbedded in $\boldsymbol{H}^1_{loc}(\Omega)$ in general (see [10]).

One then has the convenient properties below.

Proposition 2.2.4 *Under the assumptions (2.10) on* $\mathfrak{k}$, *one has:*

- $\boldsymbol{v}$ *belongs to* $\boldsymbol{H}(\mathbf{curl}\,\mathfrak{k},\Omega)$ *if, and only if,* $\mathfrak{k}\boldsymbol{v}$ *belongs to* $\boldsymbol{H}(\mathbf{curl},\Omega)$*;*
- $\boldsymbol{v}$ *belongs to* $\boldsymbol{H}(\mathrm{div}\,\mathfrak{k},\Omega)$ *if, and only if,* $\mathfrak{k}\boldsymbol{v}$ *belongs to* $\boldsymbol{H}(\mathrm{div},\Omega)$.

This Proposition allows us to simply derive useful results for elements of $\boldsymbol{H}(\mathbf{curl}\,\mathfrak{k},\Omega)$ (respectively $\boldsymbol{H}(\mathrm{div}\,\mathfrak{k},\Omega)$), *via* those obtained for elements of $\boldsymbol{H}(\mathbf{curl},\Omega)$ (respectively $\boldsymbol{H}(\mathrm{div},\Omega)$).

Recall that (see Proposition 2.1.12), an element v of $L^2(\Omega)$ belongs to $H^1(\Omega)$ if, and only if, there exists $C_{grad} \geq 0$ such that,

$$\forall \boldsymbol{g} \in \boldsymbol{D}(\Omega), \quad |(v|\,\mathrm{div}\,\boldsymbol{g})| \leq C_{grad}\|\boldsymbol{g}\|_{\boldsymbol{L}^2(\Omega)}.$$

One can prove similar results.

Proposition 2.2.5 *Let* $\boldsymbol{v} \in \boldsymbol{L}^2(\Omega)$.

- $\boldsymbol{v} \in \boldsymbol{H}(\mathbf{curl}, \Omega)$ *if, and only if, there exists* $C_{curl} \geq 0$ *such that*

$$\forall \boldsymbol{g} \in \boldsymbol{D}(\Omega), \quad |(\boldsymbol{v}|\,\mathbf{curl}\,\boldsymbol{g})| \leq C_{curl}\|\boldsymbol{g}\|_{\boldsymbol{L}^2(\Omega)}.$$

- $\boldsymbol{v} \in \boldsymbol{H}(\mathrm{div}, \Omega)$ *if, and only if, there exists* $C_{div} \geq 0$ *such that*

$$\forall g \in \mathcal{D}(\Omega), \quad |(\boldsymbol{v}|\,\mathbf{grad}\,g)| \leq C_{div}\|g\|_{L^2(\Omega)}.$$

One can then introduce the closures of $\boldsymbol{D}(\Omega)$, respectively, in $\boldsymbol{H}(\mathbf{curl}, \Omega)$ and $\boldsymbol{H}(\mathrm{div}, \Omega)$.

Definition 2.2.6 *Consider:*

- $\boldsymbol{H}_0(\mathbf{curl}, \Omega) :=$ *closure of* $\boldsymbol{D}(\Omega)$ *in* $\boldsymbol{H}(\mathbf{curl}, \Omega)$ *according to the norm* (2.13)*;*

- $\boldsymbol{H}_0(\mathrm{div}, \Omega) :=$ *closure of* $\boldsymbol{D}(\Omega)$ *in* $\boldsymbol{H}(\mathrm{div}, \Omega)$ *according to the norm* (2.15).

NB. It holds that $\boldsymbol{H}_0(\mathbf{curl}, \mathbb{R}^n) = \boldsymbol{H}(\mathbf{curl}, \mathbb{R}^n)$ and $\boldsymbol{H}_0(\mathrm{div}, \mathbb{R}^n) = \boldsymbol{H}(\mathrm{div}, \mathbb{R}^n)$.

In the spirit of Proposition 2.2.4, one can define $\boldsymbol{H}_0(\mathbf{curl}\,\mathfrak{k}, \Omega)$ and $\boldsymbol{H}_0(\mathrm{div}\,\mathfrak{k}, \Omega)$.

Definition 2.2.7 *Under the assumptions (2.10) on* $\mathfrak{k}$*, introduce:*

$$\begin{aligned}
&\boldsymbol{H}_0(\mathbf{curl}\,\mathfrak{k}, \Omega) := \{\boldsymbol{v} \in \boldsymbol{L}^2(\Omega) \ : \ \mathfrak{k}\boldsymbol{v} \in \boldsymbol{H}_0(\mathbf{curl}, \Omega)\}\,;\\
&\boldsymbol{H}_0(\mathrm{div}\,\mathfrak{k}, \Omega) := \{\boldsymbol{v} \in \boldsymbol{L}^2(\Omega) \ : \ \mathfrak{k}\boldsymbol{v} \in \boldsymbol{H}_0(\mathrm{div}, \Omega)\}.
\end{aligned}$$

Let us mention a continuation result.

Proposition 2.2.8 *Let* Ω *be an open set of category (C2) with a bounded boundary. Then, there exists a continuous (linear) continuation operator* $\mathtt{E}$ *from* $\boldsymbol{H}(\mathbf{curl}, \Omega)$ *to* $\boldsymbol{H}(\mathbf{curl}, \mathbb{R}^3)$*, respectively* $\boldsymbol{H}(\mathrm{div}, \Omega)$ *to* $\boldsymbol{H}(\mathrm{div}, \mathbb{R}^3)$*, such that, for all* $\boldsymbol{v} \in \boldsymbol{H}(\mathbf{curl}, \Omega)$*, respectively* $\boldsymbol{v} \in \boldsymbol{H}(\mathrm{div}, \Omega)$*, one has* $(\mathtt{E}\boldsymbol{v})_{|\,\Omega} = \boldsymbol{v}$.

Remark 2.2.9 *If, in addition,* Ω *is bounded, one can choose a closed ball* $\mathcal{O}$ *containing* Ω *such that for all* $\boldsymbol{v} \in \boldsymbol{H}(\mathbf{curl}, \Omega)$*, respectively* $\boldsymbol{v} \in \boldsymbol{H}(\mathrm{div}, \Omega)$*,* $\mathtt{E}\boldsymbol{v}$ *is supported in* $\mathcal{O}$.

Before carrying on with traces, let us consider some simple, but crucial, results about the mappings **grad** and **curl**. The proof is given hereafter, since it is a good example of the simplicity and of the range of the theory of distributions...

Proposition 2.2.10 *One has the following:*

1. *The mapping* **grad** *is continuous from* $H^1(\Omega)$ *to* $\boldsymbol{H}(\mathbf{curl}, \Omega)$*;*
2. *the mapping* **grad** *is continuous from* $H^1_0(\Omega)$ *to* $\boldsymbol{H}_0(\mathbf{curl}, \Omega)$.
3. *The mapping* **curl** *is continuous from* $\boldsymbol{H}(\mathbf{curl}, \Omega)$ *to* $\boldsymbol{H}(\mathrm{div}, \Omega)$*;*
4. *the mapping* **curl** *is continuous from* $\boldsymbol{H}_0(\mathbf{curl}, \Omega)$ *to* $\boldsymbol{H}_0(\mathrm{div}, \Omega)$.

Proof.

1. Given v in $H^1(\Omega)$, let us check first that $\boldsymbol{w} = \mathbf{grad}\, v$ belongs to $\boldsymbol{H}(\mathbf{curl}, \Omega)$. By definition, one has $\boldsymbol{w} \in \boldsymbol{L}^2(\Omega)$. If $\boldsymbol{w}$ were smooth, then $\mathbf{curl}\, \boldsymbol{w} = \mathbf{curl}(\mathbf{grad}\, v) = 0$ would follow. Unfortunately, this is not the case. Nevertheless, one can consider $\mathbf{curl}\, \boldsymbol{w}$ in the sense of distributions, to reach, for all $\boldsymbol{g} \in \boldsymbol{D}(\Omega)$
$$\langle \mathbf{curl}\, \boldsymbol{w}, \boldsymbol{g} \rangle = \langle \boldsymbol{w}, \mathbf{curl}\, \boldsymbol{g} \rangle = \langle \mathbf{grad}\, v, \mathbf{curl}\, \boldsymbol{g} \rangle = -\langle v, \mathrm{div}(\mathbf{curl}\, \boldsymbol{g}) \rangle = 0.$$
(Above, the first equality is left to the reader.)
In other words, $\mathbf{curl}\, \boldsymbol{w} = 0$ in the sense of distributions. As a consequence, since 0 belongs to $\boldsymbol{L}^2(\Omega)$ –considered as a subspace of $\boldsymbol{D}'(\Omega) := (\mathcal{D}'(\Omega))^3$!– one finds that $\mathbf{curl}\, \boldsymbol{w}$ is in $\boldsymbol{L}^2(\Omega)$. Thus, $\boldsymbol{w}$ is an element of $\boldsymbol{H}(\mathbf{curl}, \Omega)$.
Also, one has
$$\|\boldsymbol{w}\|_{\boldsymbol{H}(\mathbf{curl},\Omega)} = \|\boldsymbol{w}\|_{\boldsymbol{L}^2(\Omega)} = |v|_{H^1(\Omega)} \leq \|v\|_{H^1(\Omega)},$$
which establishes the continuity of the $\mathbf{grad}$ mapping from $H^1(\Omega)$ to $\boldsymbol{H}(\mathbf{curl}, \Omega)$.
2. According to item 1, given v in $H^1_0(\Omega)$ and $\boldsymbol{w} = \mathbf{grad}\, v$, one has $\boldsymbol{w} \in \boldsymbol{H}(\mathbf{curl}, \Omega)$. Therefore, one has only to check that $\boldsymbol{w}$ actually belongs to $\boldsymbol{H}_0(\mathbf{curl}, \Omega)$. By definition of $H^1_0(\Omega)$, there exists a sequence $(v_k)_k$ of elements of $\mathcal{D}(\Omega)$, which converges to v in $\|\cdot\|_{H^1(\Omega)}$-norm. According to item 1, $(\boldsymbol{w}_k)_k$, with $\boldsymbol{w}_k = \mathbf{grad}\, v_k$, converges to $\boldsymbol{w}$ in $\|\cdot\|_{\boldsymbol{H}(\mathbf{curl},\Omega)}$-norm. Moreover, all $\boldsymbol{w}_k$ belong to $\boldsymbol{D}(\Omega)$, so $\boldsymbol{w}$ belongs to its closure in $\|\cdot\|_{\boldsymbol{H}(\mathbf{curl},\Omega)}$-norm, which is precisely equal to $\boldsymbol{H}_0(\mathbf{curl}, \Omega)$.
3. The proof is similar to that of item 1.
4. The proof is similar to that of item 2.

■

We conclude this subsection with the introduction of a number of Hilbert function spaces with curl-free or divergence-free elements.

Definition 2.2.11 *Define*
$$\begin{aligned}
&\boldsymbol{H}(\mathrm{div}\, 0, \Omega) := \{\boldsymbol{v} \in \boldsymbol{H}(\mathrm{div}, \Omega) \ : \ \mathrm{div}\, \boldsymbol{v} = 0\}\,;\\
&\boldsymbol{H}_0(\mathrm{div}\, 0, \Omega) := \boldsymbol{H}(\mathrm{div}\, 0, \Omega) \cap \boldsymbol{H}_0(\mathrm{div}, \Omega)\,;\\
&\boldsymbol{H}(\mathbf{curl}\, 0, \Omega) := \{\boldsymbol{v} \in \boldsymbol{H}(\mathbf{curl}, \Omega) \ : \ \mathbf{curl}\, \boldsymbol{v} = 0\}\,;\\
&\boldsymbol{H}_0(\mathbf{curl}\, 0, \Omega) := \boldsymbol{H}(\mathbf{curl}\, 0, \Omega) \cap \boldsymbol{H}_0(\mathbf{curl}, \Omega).
\end{aligned}$$
Under the assumptions (2.10) on $\mathfrak{k}$*, define*
$$\begin{aligned}
&\boldsymbol{H}(\mathrm{div}\, \mathfrak{k}0, \Omega) := \{\boldsymbol{v} \in \boldsymbol{H}(\mathrm{div}\, \mathfrak{k}, \Omega) \ : \ \mathrm{div}\, \mathfrak{k}\boldsymbol{v} = 0\}\,;\\
&\boldsymbol{H}_0(\mathrm{div}\, \mathfrak{k}0, \Omega) := \boldsymbol{H}(\mathrm{div}\, \mathfrak{k}0, \Omega) \cap \boldsymbol{H}_0(\mathrm{div}\, \mathfrak{k}, \Omega)\,;\\
&\boldsymbol{H}(\mathbf{curl}\, \mathfrak{k}0, \Omega) := \{\boldsymbol{v} \in \boldsymbol{H}(\mathbf{curl}\, \mathfrak{k}, \Omega) \ : \ \mathbf{curl}\, \mathfrak{k}\boldsymbol{v} = 0\}\,;\\
&\boldsymbol{H}_0(\mathbf{curl}\, \mathfrak{k}0, \Omega) := \boldsymbol{H}(\mathbf{curl}\, \mathfrak{k}0, \Omega) \cap \boldsymbol{H}_0(\mathbf{curl}\, \mathfrak{k}, \Omega).
\end{aligned}$$

2.2.2 Traces of vector fields

In order to define properly the trace on Γ of elements of $\boldsymbol{H}(\mathbf{curl}, \Omega)$ or of $\boldsymbol{H}(\mathrm{div}, \Omega)$, it is convenient to have integration-by-parts formulas at one's disposal. As a matter of fact, one can proceed by *duality*, with respect to the spaces $\boldsymbol{H}^{1/2}(\Gamma)$ and $H^{1/2}(\Gamma)$, respectively, that is, those trace spaces that originate from $\boldsymbol{H}^1(\Omega)$ and $H^1(\Omega)$.

From now on, let Ω be a domain. As far as notations are concerned, one notices that in a domain, which is bounded by definition, the index $_c$ (for compact support) of the set $C_c^\infty(\overline{\Omega})$ of Definition 2.1.27 can be dropped.

Let us begin with *density* results (cf. [118, Chapter I] and [9]).

Proposition 2.2.12 *One has the following:*

- $\boldsymbol{C}^\infty(\overline{\Omega})$ *is dense in* $\boldsymbol{H}(\mathbf{curl}, \Omega)$*;*
- $\boldsymbol{C}^\infty(\overline{\Omega})$ *is dense in* $\boldsymbol{H}(\mathrm{div}, \Omega)$*;*
- *for* $s \in]0, 1/2[$, $\boldsymbol{C}^\infty(\overline{\Omega})$ *is dense in* $\boldsymbol{H}_{-s}(\mathrm{div}, \Omega)$.

With the help of Proposition 2.2.4, one easily infers other results.

Corollary 2.2.13 *Under the assumptions* (2.10) *about* $\mathfrak{k}$*, one concludes that:*

- $\mathfrak{k}^{-1}\,\boldsymbol{C}^\infty(\overline{\Omega})$ *is dense in* $\boldsymbol{H}(\mathbf{curl}\,\mathfrak{k}, \Omega)$*;*
- $\mathfrak{k}^{-1}\,\boldsymbol{C}^\infty(\overline{\Omega})$ *is dense in* $\boldsymbol{H}(\mathrm{div}\,\mathfrak{k}, \Omega)$.

One can define the unit outward normal vector $\boldsymbol{n} = n_1\boldsymbol{e}_1 + n_2\boldsymbol{e}_2 + n_3\boldsymbol{e}_3$ to its boundary, *almost everywhere* (cf. Proposition 2.1.25).

It is well-known that it holds that, for two functions f and g of $C^1(\overline{\Omega})$,

$$\int_\Omega \{f\,\frac{\partial g}{\partial x_i} + \frac{\partial f}{\partial x_i}\,g\}\,d\boldsymbol{x} = \int_\Gamma f\,g\,n_i\,d\Gamma, \quad i = 1, 2, 3. \tag{2.17}$$

What can be deduced from this formula?
∘ First, if $\boldsymbol{f}$ belongs to $\boldsymbol{C}^1(\overline{\Omega})$,

all three $(f_i)_{i=1,2,3}$ belong to $C^1(\overline{\Omega})$; as a consequence,

$$\int_\Omega \{f_i\,\frac{\partial g}{\partial x_i} + \frac{\partial f_i}{\partial x_i}\,g\}\,d\boldsymbol{x} = \int_\Gamma f_i\,g\,n_i\,d\Gamma, \quad i = 1, 2, 3.$$

Summing over i yields

$$\int_\Omega \{\boldsymbol{f}\cdot\mathbf{grad}\,g + \mathrm{div}\,\boldsymbol{f}\,g\}\,d\boldsymbol{x} = \int_\Gamma \boldsymbol{f}\cdot\boldsymbol{n}\,g\,d\Gamma. \tag{2.18}$$

∘ Second, given two elements $\boldsymbol{f}$ and $\boldsymbol{g}$ of $\boldsymbol{C}^1(\overline{\Omega})$,

the following formulas are satisfied:

$$\int_\Omega \boldsymbol{f}\cdot\mathbf{curl}\,\boldsymbol{g}\,d\boldsymbol{x} = \int_\Omega \left\{ f_1(\frac{\partial g_3}{\partial x_2}-\frac{\partial g_2}{\partial x_3}) + f_2(\frac{\partial g_1}{\partial x_3}-\frac{\partial g_3}{\partial x_1}) + f_3(\frac{\partial g_2}{\partial x_1}-\frac{\partial g_1}{\partial x_2}) \right\} d\boldsymbol{x}$$

$$\int_\Omega \mathbf{curl}\,\boldsymbol{f}\cdot\boldsymbol{g}\,d\boldsymbol{x} = \int_\Omega \left\{ (\frac{\partial f_3}{\partial x_2}-\frac{\partial f_2}{\partial x_3})g_1 + (\frac{\partial f_1}{\partial x_3}-\frac{\partial f_3}{\partial x_1})g_2 + (\frac{\partial f_2}{\partial x_1}-\frac{\partial f_1}{\partial x_2})g_3 \right\} d\boldsymbol{x}.$$

Taking the difference yields,

$$\begin{aligned}
\int_\Omega \{\boldsymbol{f}\cdot\mathbf{curl}\,\boldsymbol{g}-\mathbf{curl}\,\boldsymbol{f}\cdot\boldsymbol{g}\}\,d\boldsymbol{x} &= \int_\Omega \Big\{ (f_1\,\frac{\partial g_3}{\partial x_2}+\frac{\partial f_1}{\partial x_2}\,g_3) - (f_1\,\frac{\partial g_2}{\partial x_3}+\frac{\partial f_1}{\partial x_3}\,g_2) \\
&\qquad +(f_2\,\frac{\partial g_1}{\partial x_3}+\frac{\partial f_2}{\partial x_3}\,g_1) - (f_2\,\frac{\partial g_3}{\partial x_1}+\frac{\partial f_2}{\partial x_1}\,g_3) \\
&\qquad +(f_3\,\frac{\partial g_2}{\partial x_1}+\frac{\partial f_3}{\partial x_1}\,g_2) - (f_3\,\frac{\partial g_1}{\partial x_2}+\frac{\partial f_3}{\partial x_2}\,g_1) \Big\}\,d\boldsymbol{x} \\
&\overset{(2.17)}{=} \int_\Gamma \{f_1(g_3\,n_2-g_2\,n_3)+f_2(g_1\,n_3-g_3\,n_1) \\
&\qquad +f_3(g_2\,n_1-g_1\,n_2)\}\,d\Gamma \\
&= -\int_\Gamma \boldsymbol{f}\cdot(\boldsymbol{g}\times\boldsymbol{n})\,d\Gamma.
\end{aligned}$$

NB. The left-hand side is skew-symmetric with respect to $(\boldsymbol{f},\boldsymbol{g})$: one can therefore replace the right-hand side with

$$\int_\Gamma (\boldsymbol{f}\times\boldsymbol{n})\cdot\boldsymbol{g}\,d\Gamma.$$

As a conclusion, it follows that

$$\int_\Omega \{\boldsymbol{f}\cdot\mathbf{curl}\,\boldsymbol{g}-\mathbf{curl}\,\boldsymbol{f}\cdot\boldsymbol{g}\}\,d\boldsymbol{x} = \int_\Gamma (\boldsymbol{f}\times\boldsymbol{n})\cdot\boldsymbol{g}\,d\Gamma. \tag{2.19}$$

One can infer a first *generalized integration-by-parts formula* from (2.19), using the density results of Definition 2.2.6 and Proposition 2.2.12.

Theorem 2.2.14 *Let* $(\boldsymbol{f},\boldsymbol{g})\in\boldsymbol{H}_0(\mathbf{curl},\Omega)\times\boldsymbol{H}(\mathbf{curl},\Omega)$*:*

$$(\boldsymbol{f}\,|\,\mathbf{curl}\,\boldsymbol{g}) - (\mathbf{curl}\,\boldsymbol{f}|\boldsymbol{g}) = 0. \tag{2.20}$$

Similarly, second and third *generalized integration-by-parts formulas* can be proven, again using density results (namely, the definition of $H_0^1(\Omega)$, and Proposition 2.2.12) and (2.18).

Theorem 2.2.15 *Let* $(\boldsymbol{f},g)\in\boldsymbol{L}^2(\Omega)\times H_0^1(\Omega)$*:*

$$(\boldsymbol{f}\,|\,\mathbf{grad}\,g) + \langle \mathrm{div}\,\boldsymbol{f},g\rangle_{H_0^1(\Omega)} = 0. \tag{2.21}$$

Let $(f,g)\in H^1(\Omega)\times H_0^1(\Omega)$*:*

$$(\mathbf{grad}\,f\,|\,\mathbf{grad}\,g) + \langle \Delta f,g\rangle_{H_0^1(\Omega)} = 0. \tag{2.22}$$

Thanks to (2.18), one can prove some results concerning the *normal trace* of elements of $\boldsymbol{H}(\mathrm{div}, \Omega)$ (cf. [118, Chapter I]).

Remark 2.2.16 *As remarked previously, the results that deal with function spaces defined on the boundary or with trace mappings are also valid for* exterior domains $\Omega = \mathbb{R}^3 \setminus \overline{\Omega}_0$, *with* Ω_0 *being a domain.*

Definition 2.2.17 *Let* $\boldsymbol{f}$ *be a smooth vector function defined on* $\overline{\Omega}$. *Its normal trace* $\boldsymbol{f} \cdot \boldsymbol{n}_{|\Gamma}$ *on the boundary* Γ *is denoted by* $\gamma_n \boldsymbol{f}$, *and* γ_n *is called the normal trace mapping.*

Theorem 2.2.18 *The mapping* γ_n *has a unique continuous extension, from* $\boldsymbol{H}(\mathrm{div}, \Omega)$ *to* $H^{-1/2}(\Gamma)$, *which is surjective.*
In addition, the following characterization holds:

$$\boldsymbol{H}_0(\mathrm{div}, \Omega) := \{\boldsymbol{v} \in \boldsymbol{H}(\mathrm{div}, \Omega) \ : \ \boldsymbol{v} \cdot \boldsymbol{n}_{|\Gamma} = 0\}.$$

Note that, according to this framework, one can define as a by-product[5] the trace mapping of the normal derivative.

Definition 2.2.19 *Let* f *be a smooth scalar function defined on* $\overline{\Omega}$. *Its trace of the normal derivative* $(\partial_n f)_{|\Gamma} := \mathbf{grad}\, f \cdot \boldsymbol{n}_{|\Gamma}$ *on the boundary* Γ *is denoted by* $\gamma_1 f$, *and* γ_1 *is called the trace mapping of the normal derivative of scalar fields.*

Consider the space

$$E(\Delta, L^2(\Omega)) := \{\phi \in H^1(\Omega) \ : \ \Delta\phi \in L^2(\Omega)\},$$

endowed with the graph norm (see Definition 4.1.5). Given any element f of $E(\Delta, L^2(\Omega))$, its gradient $\mathbf{grad}\, f$ belongs to $\boldsymbol{H}(\mathrm{div}, \Omega)$, so its normal trace is well-defined. Then, since it is easily proven that $C^\infty(\overline{\Omega})$ is dense in $E(\Delta, L^2(\Omega))$, one finds that $\gamma_1 f$ actually coincides with $\gamma_n(\mathbf{grad}\, f)$. One can finally prove...

Corollary 2.2.20 *The mapping* γ_1 *has a unique continuous extension, from* $E(\Delta, L^2(\Omega))$ *to* $H^{-1/2}(\Gamma)$, *which is surjective.*

It is important to note that the normal traces of elements of $\boldsymbol{H}(\mathrm{div}, \Omega)$ do not belong, in general, to $L^2(\Gamma)$, but to a larger space. This is a reversed situation, compared to the trace of elements of $H^1(\Omega)$. This means that, unless otherwise specified, the normal trace is not (locally) integrable on Γ.

Remark 2.2.21 *Consider* $\mathfrak{k}$ *that fulfills (2.10). With respect to the norm (2.16), the closure of* $\mathfrak{k}^{-1}\boldsymbol{D}(\Omega)$ *in* $\boldsymbol{H}(\mathrm{div}\, \mathfrak{k}, \Omega)$, $\boldsymbol{H}_0(\mathrm{div}\, \mathfrak{k}, \Omega)$, *is equal to*

$$\{\boldsymbol{v} \in \boldsymbol{H}(\mathrm{div}\, \mathfrak{k}, \Omega) \ : \ \mathfrak{k}\boldsymbol{v} \cdot \boldsymbol{n}_{|\Gamma} = 0\}.$$

[5] Evidently, a direct construction is also possible!

To conclude on the normal trace, we give the result of [9] regarding elements of $\boldsymbol{H}_{-s}(\mathrm{div}, \Omega)$.

Theorem 2.2.22 *Let $s \in]0, 1/2[$. The mapping γ_n has a unique continuous extension, from $\boldsymbol{H}_{-s}(\mathrm{div}, \Omega)$ to $H^{-1/2}(\Gamma)$, which is surjective.*

Thanks to (2.19), one can now prove some results concerning the *tangential trace* of elements of $\boldsymbol{H}(\mathbf{curl}, \Omega)$ (cf. [118, Chapter I]).

Definition 2.2.23 *Let $\boldsymbol{f}$ be a smooth vector function defined on $\overline{\Omega}$. Its tangential trace $\boldsymbol{f} \times \boldsymbol{n}_{|\Gamma}$ on the boundary Γ is denoted by $\gamma_\top \boldsymbol{f}$, and $\gamma_\top$ is called the tangential trace mapping.*

Theorem 2.2.24 *The mapping $\gamma_\top$ has a unique continuous extension, from $\boldsymbol{H}(\mathbf{curl}, \Omega)$ to $\boldsymbol{H}^{-1/2}(\Gamma)$.*
In addition, the following characterization holds:

$$\boldsymbol{H}_0(\mathbf{curl}, \Omega) := \{\boldsymbol{v} \in \boldsymbol{H}(\mathbf{curl}, \Omega) \ : \ \boldsymbol{v} \times \boldsymbol{n}_{|\Gamma} = 0\}.$$

Again, unless otherwise specified, tangential traces of elements of $\boldsymbol{H}(\mathbf{curl}, \Omega)$ are not (locally) integrable on Γ.

Remark 2.2.25 *Consider ξ that fulfills (2.10). With respect to the norm (2.14), the closure of $\xi^{-1}\boldsymbol{D}(\Omega)$ in $\boldsymbol{H}(\mathbf{curl}\,\xi, \Omega)$, $\boldsymbol{H}_0(\mathbf{curl}\,\xi, \Omega)$, is equal to*

$$\{\boldsymbol{v} \in \boldsymbol{H}(\mathbf{curl}\,\xi, \Omega) \ : \ \xi\boldsymbol{v} \times \boldsymbol{n}_{|\Gamma} = 0\}.$$

If one introduces Γ', an open subset of Γ, with $meas_\Gamma(\Gamma') > 0$, such that its boundary is a Lipschitz submanifold of Γ, then one can characterize [110] the restriction to Γ' of the normal (respectively tangential) trace of elements of $\boldsymbol{H}(\mathrm{div}, \Omega)$ (respectively $\boldsymbol{H}(\mathbf{curl}, \Omega)$), in the same way and with the same notations as (2.9). Indeed, one finds that:

- given $\boldsymbol{f} \in \boldsymbol{H}(\mathrm{div}, \Omega)$, $\boldsymbol{f} \cdot \boldsymbol{n}_{|\Gamma'}$ belongs to $\widetilde{H}^{-1/2}(\Gamma')$, according to

$$\forall g \in \widetilde{H}^{1/2}(\Gamma'), \ \langle \boldsymbol{f} \cdot \boldsymbol{n}_{|\Gamma'}, g\rangle_{\widetilde{H}^{1/2}(\Gamma')} = \langle \boldsymbol{f} \cdot \boldsymbol{n}, \tilde{g}\rangle_{H^{1/2}(\Gamma)}\,; \tag{2.23}$$

- given $\boldsymbol{f} \in \boldsymbol{H}(\mathbf{curl}, \Omega)$, $\boldsymbol{f} \times \boldsymbol{n}_{|\Gamma'}$ belongs to $\widetilde{\boldsymbol{H}}^{-1/2}(\Gamma')$, according to

$$\forall \boldsymbol{g} \in \widetilde{\boldsymbol{H}}^{1/2}(\Gamma'), \quad \langle \boldsymbol{f} \times \boldsymbol{n}_{|\Gamma'}, \boldsymbol{g}\rangle_{\widetilde{\boldsymbol{H}}^{1/2}(\Gamma')} = \langle \boldsymbol{f} \times \boldsymbol{n}, \tilde{\boldsymbol{g}}\rangle_{\boldsymbol{H}^{1/2}(\Gamma)}\,. \tag{2.24}$$

Remark 2.2.26 *Results similar to (2.23) (respectively (2.24)) hold for fields of $\boldsymbol{H}(\mathrm{div}\,\xi, \Omega)$ (respectively $\boldsymbol{H}(\mathbf{curl}\,\xi, \Omega)$), under the assumptions (2.10) about ξ.*

Definition 2.2.27 *Let Ω be a domain with boundary Γ. Let Γ' be an open subset of Γ such that its boundary is a Lipschitz submanifold of Γ, with $meas_\Gamma(\Gamma') > 0$. Introduce*

$$\boldsymbol{C}^{\infty}_{\Gamma'}(\overline{\Omega}) := \{\boldsymbol{f} \in \boldsymbol{C}^{\infty}(\overline{\Omega}) \ : \ \boldsymbol{f} = 0 \textit{ in a neighborhood of } \Gamma'\}.$$

Then, one can define

$$\begin{aligned}
&\boldsymbol{H}_{0,\Gamma'}(\mathbf{curl}, \Omega) := \textit{closure of } \boldsymbol{C}^{\infty}_{\Gamma'}(\overline{\Omega}) \textit{ in } \boldsymbol{H}(\mathbf{curl}, \Omega)\,;\\
&\boldsymbol{H}_{0,\Gamma'}(\mathrm{div}, \Omega) := \textit{closure of } \boldsymbol{C}^{\infty}_{\Gamma'}(\overline{\Omega}) \textit{ in } \boldsymbol{H}(\mathrm{div}, \Omega).
\end{aligned}$$

Furthermore, it holds that

$$\begin{aligned}
&\boldsymbol{H}_{0,\Gamma'}(\mathbf{curl}, \Omega) = \{\boldsymbol{f} \in \boldsymbol{H}(\mathbf{curl}, \Omega) \ : \ \boldsymbol{f} \times \boldsymbol{n}_{|\Gamma'} = 0\}\,;\\
&\boldsymbol{H}_{0,\Gamma'}(\mathrm{div}, \Omega) = \{\boldsymbol{f} \in \boldsymbol{H}(\mathrm{div}, \Omega) \ : \ \boldsymbol{f} \cdot \boldsymbol{n}_{|\Gamma'} = 0\}.
\end{aligned}$$

As a consequence of Proposition 2.1.60, we note that if $\boldsymbol{f} \in \boldsymbol{H}_{0,\Gamma'}(\mathbf{curl}, \Omega)$, then $\boldsymbol{f} \times \boldsymbol{n}_{|\Gamma''} \in \boldsymbol{H}^{-1/2}(\Gamma'')$, where $\Gamma'' = int(\Gamma \setminus \Gamma')$ (here, $meas_{\Gamma}(\Gamma') < meas_{\Gamma}(\Gamma)$). Similarly, if $\boldsymbol{f} \in \boldsymbol{H}_{0,\Gamma'}(\mathrm{div}, \Omega)$, then $\boldsymbol{f} \cdot \boldsymbol{n}_{|\Gamma''} \in H^{-1/2}(\Gamma'')$.
Once the existence of the trace mappings has been established, it is possible to consider some other *generalized integration-by-parts formulas* (2.18) and (2.19). Note that those formulas are closely intertwined with the characterization of subspaces composed of trace-free elements. We recall that, according to Proposition 2.1.44, for $s \in]0, 1/2[$, one has $H^s_0(\Omega) = H^s(\Omega)$.

Theorem 2.2.28 *Let* $(\boldsymbol{f}, g) \in \boldsymbol{H}(\mathrm{div}, \Omega) \times H^1(\Omega)$*:*

$$(\boldsymbol{f} \,|\, \mathbf{grad}\, g) + (\mathrm{div}\, \boldsymbol{f} | g) = \langle \boldsymbol{f} \cdot \boldsymbol{n}, g \rangle_{H^{1/2}(\Gamma)}. \tag{2.25}$$

Given $s \in]0, 1/2[$*, let* $(\boldsymbol{f}, g) \in \boldsymbol{H}_{-s}(\mathrm{div}, \Omega) \times H^1(\Omega)$*:*

$$(\boldsymbol{f} \,|\, \mathbf{grad}\, g) + \langle \mathrm{div}\, \boldsymbol{f},\, g \rangle_{H^s_0(\Omega)} = \langle \boldsymbol{f} \cdot \boldsymbol{n}, g \rangle_{H^{1/2}(\Gamma)}. \tag{2.26}$$

Let $(\boldsymbol{f}, \boldsymbol{g}) \in \boldsymbol{H}(\mathbf{curl}, \Omega) \times \boldsymbol{H}^1(\Omega)$*:*

$$(\boldsymbol{f} \,|\, \mathbf{curl}\, \boldsymbol{g}) - (\mathbf{curl}\, \boldsymbol{f} | \boldsymbol{g}) = \langle \boldsymbol{f} \times \boldsymbol{n}, \boldsymbol{g} \rangle_{\boldsymbol{H}^{1/2}(\Gamma)}. \tag{2.27}$$

Let us conclude this study of fields of $\boldsymbol{H}(\mathrm{div}\, \mathfrak{k}, \Omega)$ and $\boldsymbol{H}(\mathbf{curl}\, \mathfrak{k}, \Omega)$ – one has possibly $\mathfrak{k} = \mathbb{I}_3$ – with results dealing with jumps of the normal and tangential traces. We begin with the jump of normal traces.

Definition 2.2.29 *Let* Ω *be a domain partitioned into* $\mathcal{P} := (\Omega_p)_{p=+,-}$*. Let* $\Sigma = \partial\Omega_+ \cap \partial\Omega_-$ *be the* interface *separating* Ω_+ *and* Ω_-*. We use the same notations as in Definition 2.1.67. Given* $\boldsymbol{f} \in \boldsymbol{L}^2(\Omega)$ *with* $\boldsymbol{f}_{|\Omega_p} \in \boldsymbol{H}(\mathrm{div}, \Omega_p)$ *for* $p = +, -$*, the* normal jump *of* $\boldsymbol{f}$ *through* Σ *is equal to*

$$[\boldsymbol{f} \cdot \boldsymbol{n}_{\Sigma}]_{\Sigma} := \delta^+_{\Sigma}(\gamma_{n,+}\boldsymbol{f} + \gamma_{n,-}\boldsymbol{f}).$$

Here, the normal jump is understood as a difference! Indeed, on the interface, it holds that $\boldsymbol{n}_- = -\boldsymbol{n}_+$.

Proposition 2.2.30 *Let Ω be a domain partitioned into $\mathcal{P} := (\Omega_p)_{p=+,-}$, and let $\Sigma = \partial\Omega_+ \cap \partial\Omega_-$. Under the assumptions (2.10) about $\mathfrak{k}$, it holds that*

$$\boldsymbol{H}(\operatorname{div}\mathfrak{k},\Omega) = \{\boldsymbol{f} \in \boldsymbol{L}^2(\Omega) \ : \ \boldsymbol{f}_{|\Omega_p} \in \boldsymbol{H}(\operatorname{div}\mathfrak{k},\Omega_p),\ p=+,-,$$
$$[\mathfrak{k}\boldsymbol{f}\cdot\boldsymbol{n}_\Sigma]_\Sigma = 0 \text{ in } \widetilde{H}^{-1/2}(\Sigma)\}.$$

We then consider the jump of tangential traces.

Definition 2.2.31 *Let Ω be a domain partitioned into $\mathcal{P} := (\Omega_p)_{p=+,-}$. Let $\Sigma = \partial\Omega_+ \cap \partial\Omega_-$ be the* interface *separating Ω_+ and Ω_-. We use the same notations as in Definition 2.1.67. Given $\boldsymbol{f} \in \boldsymbol{L}^2(\Omega)$ with $\boldsymbol{f}_{|\Omega_p} \in \boldsymbol{H}(\mathbf{curl},\Omega_p)$ for $p=+,-$, the* tangential jump *of $\boldsymbol{f}$ through Σ is equal to*

$$[\boldsymbol{f}\times\boldsymbol{n}_\Sigma]_\Sigma := \delta_\Sigma^+(\gamma_{\top,+}\boldsymbol{f} + \gamma_{\top,-}\boldsymbol{f}).$$

Once more, the tangential jump is understood as a difference.

Proposition 2.2.32 *Let Ω be a domain partitioned into $\mathcal{P} := (\Omega_p)_{p=+,-}$, and let $\Sigma = \partial\Omega_+ \cap \partial\Omega_-$. Under the assumptions (2.10) about $\mathfrak{k}$, it holds that*

$$\boldsymbol{H}(\mathbf{curl}\,\mathfrak{k},\Omega) = \{\boldsymbol{f} \in \boldsymbol{L}^2(\Omega) \ : \ \boldsymbol{f}_{|\Omega_p} \in \boldsymbol{H}(\mathbf{curl}\,\mathfrak{k},\Omega_p),\ p=+,-,$$
$$[\mathfrak{k}\boldsymbol{f}\times\boldsymbol{n}_\Sigma]_\Sigma = 0 \text{ in } \widetilde{\boldsymbol{H}}^{-1/2}(\Sigma)\}.$$

2.3 Practical function spaces in the $(t,\boldsymbol{x})$ variable

To solve some time-dependent problems, in particular, the time-dependent Maxwell equations, one needs to introduce function spaces depending both on the time variable t and on the space variable $\boldsymbol{x}$. Indeed, in that case, the unknowns, i.e., the electromagnetic fields, depend on the $(t,\boldsymbol{x})$ variable. Obviously, one can consider distributions in *space and time*, that is, on $\mathbb{R}\times\mathbb{R}^3$. However, one generally distinguishes between the variables t and $\boldsymbol{x}$, since they do not play the same role. Classically, one deals with the values of a field at a *given time* t. Hence, for a function f depending on both $\boldsymbol{x}$ and t, we are interested in $\boldsymbol{x} \mapsto f(t_0,\boldsymbol{x})$, for a given t_0.
More precisely, let $T_- \in [-\infty,+\infty[$ and $T_+ \in]-\infty,+\infty]$ with $T- < T_+$ respectively denote the initial and final times, and let Ω denote the subset of $\mathbb{R}^3$ of interest. With respect to distributions in *space and time*, the corresponding space of distributions is simply $\mathcal{D}'(]T_-,T_+[\times\Omega)$. A classical result that allows one to go back and forth from distributions in the $(t,\boldsymbol{x})$ variable to continuous functions of the variable t, with values in function spaces of the variable $\boldsymbol{x}$, is that

the tensor product space $\mathcal{D}(]T_-,T_+[) \otimes \mathcal{D}(\Omega)$ is dense in $\mathcal{D}(]T_-,T_+[\times\Omega)$.

Next, consider the function

$$\begin{aligned} f :]T_-, T_+[\times \Omega &\to \mathbb{R} \\ (t, \boldsymbol{x}) &\mapsto f(t, \boldsymbol{x}) \,. \end{aligned}$$

For any time $t \in]T_-, T_+[$, one can introduce the function $f(t)$

$$\begin{aligned} f(t) : \Omega &\to \mathbb{R} \\ \boldsymbol{x} &\mapsto f(t, \boldsymbol{x}) \,, \end{aligned}$$

so that the function f can be identified with the function

$$\begin{aligned}]T_-, T_+[&\to \{\Omega \to \mathbb{R}\} \\ t &\mapsto f(t). \end{aligned}$$

In what follows, we will define the function spaces in the $(t, \boldsymbol{x})$ variable, which will be useful for the weak formulations in the subsequent chapters. For that, it will be sufficient to define two types of function space and one class of vector distribution. To fix ideas, consider that $T_- = 0$ and $T_+ = T < +\infty$. Let $m \in \mathbb{N}$, $1 \leq p \leq \infty$, and let X, Y and H respectively be two Banach spaces and a Hilbert space of the space variable $\boldsymbol{x}$. Finally, let $\mathcal{L}(X, Y)$ be the space of continuous, linear mappings from X to Y([6]).

Definition 2.3.1 *Given an interval I of $\mathbb{R}$, $C^m(I; X)$ is the set of functions of class C^m in I, valued into X. Endowed with the norm*

$$\|f\|_{C^m(I;X)} := \sum_{k=0}^{m} \sup_{t \in I} \|\frac{d^k f}{dt^k}(t)\|_X \,,$$

this is a Banach space.

Definition 2.3.2 *The space $L^p(0, T; X)$ is the set of Lebesgue-measurable functions valued into X, and such that*

$$\begin{cases} \textit{for } 1 \leq p < \infty & \|f\|_{L^p(0,T;X)} := \left\{ \displaystyle\int_0^T \|f(t)\|_X^p \, dt \right\}^{1/p} < \infty \\ \textit{for } p = \infty & \|f\|_{L^\infty(0,T;X)} := \operatorname{esssup}_{t \in]0,T[} \|f(t)\|_X < \infty. \end{cases}$$

Endowed with the norm $\|\cdot\|_{L^p(0,T;X)}$, $L^p(0, T; X)$ is a Banach space.
In addition, if $X = H$ and $p = 2$, the space $L^2(0, T; H)$ is a Hilbert space endowed with the scalar product

$$(f, g)_{L^2(0,T;H)} := \int_0^T (f(t), g(t))_H \, dt.$$

Remark 2.3.3 *According to the Fubini theorem, one can easily verify that*

$$L^2(0, T; L^2(\Omega)) = L^2(]0, T[\times \Omega).$$

[6] See §4.1, Definition 4.1.1, for details on continuous linear mappings.

Hence, if f belongs to $L^2(0,T;L^2(\Omega))$, one can define its partial derivative with respect to the variable t in the sense of distributions, in $\mathcal{D}'(]0,T[\times\Omega)$, and consider elements such that $\partial_t f \in L^2(0,T;L^2(\Omega))$, which allows us to define $H^1(0,T;L^2(\Omega))$, and so on.

We recall a number of classical, elementary results below.

Proposition 2.3.4 *Let X' be the dual space of X.*

- *For all $f \in L^1(0,T;X)$, there exists one, and only one, $F \in X$ such that*

$$\forall g \in X',\ \langle g, F\rangle_X = \int_0^T \langle g, f(t)\rangle_X \, dt\,;\ F \text{ is denoted by } \int_0^T f(t)\,dt\,;$$

- *For all $g \in L^1(0,T;X')$, there exists one, and only one, $G \in X'$ such that*

$$\forall f \in X,\ \langle G, f\rangle_X = \int_0^T \langle g(t), f\rangle_X \, dt\,;\ G \text{ is denoted by } \int_0^T g(t)\,dt\,.$$

Proposition 2.3.5 *Let $A \in \mathcal{L}(X,Y)$.*

- *The mapping $f \mapsto Af$ is continuous from $C^0([0,T];X)$ to $C^0([0,T];Y)$;*
- *For all $f \in L^1(0,T;X)$, $\displaystyle\int_0^T A(f(t))\,dt = A\left(\int_0^T f(t)\,dt\right)$.*

Proposition 2.3.6 *A bound and differentiation of integrals:*

- *For all $f \in L^1(0,T;X)$, $\displaystyle\left\|\int_0^T f(t)\,dt\right\|_X \leq \int_0^T \|f(t)\|_X\,dt$;*
- *For all $f \in C^0([0,T];X)$,*

$$\forall t \in]0,T[,\ \lim_{h\to 0}\left(\frac{1}{h}\int_t^{t+h} f(s)\,ds\right) = f(t) \text{ and}$$

$$\lim_{h\to 0^+}\left(\frac{1}{h}\int_0^{h} f(s)\,ds\right) = f(0)\,;$$

- *For all $f \in C^1([0,T];X)$, $\displaystyle\int_0^T \frac{df}{ds}(s)\,ds = f(T) - f(0)$.*

More generally, it is necessary to introduce the distributions valued into function spaces, that is, vector-valued distributions. According to [94], one can proceed as follows.

Definition 2.3.7 *The space of X-valued distributions in $]0,T[$ is denoted by $\mathcal{D}'(]0,T[;X)$. It is the set of linear and continuous mappings defined on $\mathcal{D}(]0,T[)$ with a value in X, where continuity is considered with respect to uniform convergence on the bounded sets of $\mathcal{D}(]0,T[)$.*

Now, as in Definition 2.1.6, for f in $\mathcal{D}'(]0,T[;X)$ and for ϕ in $\mathcal{D}(]0,T[)$, the action of f on ϕ is written with the help of duality brackets, with an index $_t$ to emphasize the fact that we are considering the time variable:

$$\langle f, \phi \rangle_t.$$

By definition, the result of these duality brackets belongs to X.

Remark 2.3.8 *Note that the spaces $L^2(0,T;X)$ and $C^m([0,T];X)$ can be identified with subspaces of $\mathcal{D}'(]0,T[;X)$.*

Now, similarly to the case of standard distributions, i.e., the ones that depend on the space variable $\boldsymbol{x}$ alone, one can introduce the notion of differentiation.

Definition 2.3.9 *Let f be an element of $\mathcal{D}'(]0,T[;X)$. Its time derivative is defined by*

$$\forall \phi \in \mathcal{D}(]0,T[), \quad \langle \frac{df}{dt}, \phi \rangle_t = -\langle f, \frac{d\phi}{dt} \rangle_t.$$

Moreover, the time differentiation in the sense of distributions is internal, in other words...

Proposition 2.3.10 *Let $f \in \mathcal{D}'(]0,T[;X)$, then $\dfrac{df}{dt}$ belongs to $\mathcal{D}'(]0,T[;X)$.*

Definition 2.3.11 *Let $A \in \mathcal{L}(X,Y)$ and $f \in \mathcal{D}'(]0,T[;X)$: Af, defined by*

$$\forall \phi \in \mathcal{D}(]0,T[), \quad \langle Af, \phi \rangle_t := A\left(\langle f, \phi \rangle_t\right),$$

belongs to $\mathcal{D}'(]0,T[;Y)$.

Thus, one has...

Proposition 2.3.12 *Consider the setting of the previous Definition. Then, the mapping $f \mapsto Af$ is linear and continuous from $\mathcal{D}'(]0,T[;X)$ to $\mathcal{D}'(]0,T[;Y)$.*

From these last two definitions and related propositions, one can deduce the (expected but) *fundamental* result concerning the distributions in the $(t, \boldsymbol{x})$ variable, which basically claims that one can *invert* the time and space differentiations

Theorem 2.3.13 *For all $(f, A) \in \mathcal{D}'(]0,T[;X) \times \mathcal{L}(X,Y)$, we have the following identity:*

$$\frac{d}{dt}(Af) = A\left(\frac{df}{dt}\right).$$

From a practical point of view, this theorem allows us to perform the computations in a "natural" and expected way. This will be crucial for deriving the variational formulations of the time-dependent problems. For instance, if $\boldsymbol{u} \in \mathcal{D}'(]0,T[;\boldsymbol{H}(\mathbf{curl},\Omega))$, one knows that $\mathbf{curl}\,\boldsymbol{u} \in \mathcal{D}'(]0,T[;\boldsymbol{L}^2(\Omega))$. According to the above theorem,

$$\frac{d}{dt}(\mathbf{curl}\,\boldsymbol{u}) = \mathbf{curl}\left(\frac{d\boldsymbol{u}}{dt}\right) \text{ in } \mathcal{D}'(]0,T[;\boldsymbol{L}^2(\Omega))\,.$$

These considerations will be sufficient to give a meaning to the variational formulations of the subsequent chapters. For more details, we refer the reader to [158], [179] or [94] chap. XVIII.

In the remainder of the book, we will keep the notation $\boldsymbol{u}(t) \ : \ \boldsymbol{x} \mapsto \boldsymbol{u}(t,\boldsymbol{x})$ to denote the value of $\boldsymbol{u}$ at a given time t. We will also use primes to denote differentiation with respect to time of $\boldsymbol{u}$ (when it has a meaning), e.g., $\boldsymbol{u}'$, $\boldsymbol{u}''$, etc.. When $\boldsymbol{u}$ belongs to $C^m([0,T];X)$, for a Banach space X, this notation is justified. If $\boldsymbol{u}$ belongs to $L^2(0,T;X)$, $\boldsymbol{u}(t)$ is known for almost all t. In the most general case, that is, if $\boldsymbol{u}$ belongs to $\mathcal{D}'(]0,T[;X)$, this is an *improper notation*. Nevertheless, this "generalized" notation allows us to give a more unified presentation of the results. Note also that it fits well into the physical perception, i.e., the knowledge of the electromagnetic fields at a given time. Moreover, from a mathematical point of view, this is an admissible notation, since one can invert the time derivative and the differentiation in space (see Theorem 2.3.13).

3

Complements of applied functional analysis

We complement the classic results of Chapter 2 in two directions. In the first part, we review some recent results on the traces of vector fields, and especially the tangential trace of electromagnetic-like fields. In the second part, we focus on the extraction of potentials for curl-free and/or divergence-free fields and consequences. In this chapter, Ω is an open subset of $\mathbb{R}^3$ with boundary Γ.

3.1 Vector fields: tangential trace revisited

Below, the tangential trace of elements of $\boldsymbol{H}(\mathbf{curl}, \Omega)$ is scrutinized, and refined generalized integration by parts *à la* (2.27) is established, involving two vector fields of $\boldsymbol{H}(\mathbf{curl}, \Omega)$. Indeed, in the case of the tangential trace, the mapping $\gamma_\top$ from $\boldsymbol{H}(\mathbf{curl}, \Omega)$ to $\boldsymbol{H}^{-1/2}(\Gamma)$ is not surjective. This seems obvious, since one has $(\gamma_\top \boldsymbol{f}) \cdot \boldsymbol{n} = 0$ in some sense, for instance, as soon as a pointwise $\gamma_\top \boldsymbol{f}$ exists. But there are also more profound arguments, which allow us to prove that, even when one considers only the set of vector fields on Γ that are orthogonal to $\boldsymbol{n}$, the mapping is nevertheless not surjective [73, 5, 67, 68].

In order to prove this, together with a number of useful results, let us consider, for simplicity, the case of a polyhedral domain, still called Ω, with the notations of Definition 2.1.54. We follow here the path chosen by A. Buffa and the second author in [67, 68], where the case of a curved polyhedron is also addressed. Again for simplicity, we assume that its boundary Γ is topologically trivial (the notion is defined in §3.2). See [66] for a topologically non-trivial boundary: in this case, decompositions of function spaces have to be modified, with the addition of a third – finite-dimensional – vector subspace. Along the way, representative proofs, establishing the continuity of the mappings, are provided. On the other hand, the results relating the *surjectivity* of the mappings are stated without proof. In the more general case of a domain, the reader is referred to [190, 70].

Looking at the integration-by-parts formula (2.27), it is clear that the normal component of $\boldsymbol{g}$ does not play any role in the formula. Therefore, one can concentrate on the tangential components only.

Definition 3.1.1 *Let $\boldsymbol{f}$ be a smooth vector function defined on $\overline{\Omega}$. Its tangential components trace $\boldsymbol{n} \times (\boldsymbol{f} \times \boldsymbol{n})_{|\Gamma}$ on the boundary Γ is denoted by $\pi_\top \boldsymbol{f}$, and $\pi_\top$ is called the tangential components trace mapping.*

In order to define the actual range of $\pi_\top$, starting from $\boldsymbol{H}^1(\Omega)$, let us introduce some spaces of vector fields, defined on Γ.

Definition 3.1.2 *Let $\boldsymbol{L}^2_t(\Gamma)$ be the space of tangential, square integrable vector fields:*

$$\boldsymbol{L}^2_t(\Gamma) := \{\boldsymbol{v} \in \boldsymbol{L}^2(\Gamma) \ : \ \boldsymbol{v} \cdot \boldsymbol{n} = 0\}.$$

Let $\boldsymbol{H}^{1/2}_-(\Gamma)$ be the space:

$$\boldsymbol{H}^{1/2}_-(\Gamma) := \boldsymbol{L}^2_t(\Gamma) \cap H^{1/2}_-(\Gamma)^3.$$

Let $\boldsymbol{H}^{1/2}_\parallel(\Gamma)$ be the space:

$$\boldsymbol{H}^{1/2}_\parallel(\Gamma) := \{\boldsymbol{v} \in \boldsymbol{H}^{1/2}_-(\Gamma) \ : \ \boldsymbol{v}_i \cdot \boldsymbol{\tau}_{ij} \overset{1/2}{=} \boldsymbol{v}_j \cdot \boldsymbol{\tau}_{ij}, \ \forall (i,j) \in \mathcal{N}_E\}.$$

The graph norm ($\|\cdot\|_{\boldsymbol{H}^{1/2}_-(\Gamma)}$ plus matching conditions $\cdot \overset{1/2}{=} \cdot \ \forall (i,j)$ expressed as in Definition 2.1.55) on $\boldsymbol{H}^{1/2}_\parallel(\Gamma)$ is denoted by $\|\cdot\|_{\boldsymbol{H}^{1/2}_\parallel(\Gamma)}$.

NB. The elements of $\boldsymbol{L}^2_t(\Gamma)$ are considered as *two-dimensional* vector fields.

It is then straightforward to see that $\boldsymbol{H}^{1/2}_\parallel(\Gamma)$ is a Hilbert space. According to Corollary 2.1.57, one finds that the range of $\pi_\top$ from $\boldsymbol{H}^1(\Omega)$, $\pi_\top(\boldsymbol{H}^1(\Omega))$, is a subset of $\boldsymbol{H}^{1/2}_\parallel(\Gamma)$. In addition, one can prove that the mapping $\pi_\top$ is surjective.

Theorem 3.1.3 *The mapping $\pi_\top$ has a unique continuous extension, from $\boldsymbol{H}^1(\Omega)$ to $\boldsymbol{H}^{1/2}_\parallel(\Gamma)$, which is surjective.*

In the same way, one can define the Hilbert space $\boldsymbol{H}^{1/2}_\perp(\Gamma)$, with *ad hoc* compatibility conditions (see below), and prove that the mapping $\gamma_\top$ is surjective, from $\boldsymbol{H}^1(\Omega)$ to $\boldsymbol{H}^{1/2}_\perp(\Gamma)$.

Definition 3.1.4 *Let $\boldsymbol{H}^{1/2}_\perp(\Gamma)$ be the space:*

$$\boldsymbol{H}^{1/2}_\perp(\Gamma) := \{\boldsymbol{v} \in \boldsymbol{H}^{1/2}_-(\Gamma) \ : \ \boldsymbol{v}_i \cdot \boldsymbol{\tau}_i(j) \overset{1/2}{=} \boldsymbol{v}_j \cdot \boldsymbol{\tau}_j(i), \ \forall (i,j) \in \mathcal{N}_E\}.$$

The graph norm on $\boldsymbol{H}^{1/2}_\perp(\Gamma)$ is denoted by $\|\cdot\|_{\boldsymbol{H}^{1/2}_\perp(\Gamma)}$.

Theorem 3.1.5 *The mapping $\gamma_\top$ has a unique continuous extension, from $\boldsymbol{H}^1(\Omega)$ to $\boldsymbol{H}^{1/2}_\perp(\Gamma)$, which is surjective.*

The next step is to introduce the dual space of $\boldsymbol{H}^{1/2}_\parallel(\Gamma)$ (respectively of $\boldsymbol{H}^{1/2}_\perp(\Gamma)$), with $\boldsymbol{L}^2_t(\Gamma)$ as the pivot space, called $\boldsymbol{H}^{-1/2}_\parallel(\Gamma)$ (respectively $\boldsymbol{H}^{-1/2}_\perp(\Gamma)$) hereafter, and endowed with the dual norm $\|\cdot\|_{\boldsymbol{H}^{-1/2}_\parallel(\Gamma)}$ (respectively $\|\cdot\|_{\boldsymbol{H}^{-1/2}_\perp(\Gamma)}$). As a consequence of Theorem 3.1.3, one has...

Corollary 3.1.6 *The mapping $\gamma_\top$ is continuous from $\boldsymbol{H}(\mathbf{curl},\Omega)$ to $\boldsymbol{H}^{-1/2}_\parallel(\Gamma)$.*

Proof. First, let $\boldsymbol{\lambda}$ be in $\boldsymbol{H}^{1/2}_\parallel(\Gamma)$: $\pi_\top$ is linear and surjective from $\boldsymbol{H}^1(\Omega)$ to $\boldsymbol{H}^{1/2}_\parallel(\Gamma)$ (two Banach spaces), so it has a continuous right-inverse, according to the open mapping theorem 4.1.4. In other words, there exists $\boldsymbol{g}\in\boldsymbol{H}^1(\Omega)$ such that

$$\pi_\top\boldsymbol{g}=\boldsymbol{\lambda} \text{ and } \|\boldsymbol{g}\|_{\boldsymbol{H}^1(\Omega)}\le C_\pi\|\boldsymbol{\lambda}\|_{\boldsymbol{H}^{1/2}_\parallel(\Gamma)}.$$

Above, the constant C_π is independent of $\boldsymbol{\lambda}$.

Second, given an element $\boldsymbol{f}$ of $\boldsymbol{H}(\mathbf{curl},\Omega)$, one can apply the integration-by-parts formula (2.27) to $(\boldsymbol{f},\boldsymbol{g})$:

$$\langle\gamma_\top\boldsymbol{f},\pi_\top\boldsymbol{g}\rangle_{\boldsymbol{H}^{1/2}(\Gamma)}=(\boldsymbol{f}|\,\mathbf{curl}\,\boldsymbol{g})-(\mathbf{curl}\,\boldsymbol{f}|\boldsymbol{g}).$$

As a consequence of the above, one finds that

$$\sup_{\boldsymbol{\lambda}\in\boldsymbol{H}^{1/2}_\parallel(\Gamma)}\left|\langle\gamma_\top\boldsymbol{f},\boldsymbol{\lambda}\rangle_{\boldsymbol{H}^{1/2}(\Gamma)}\right|\le\sqrt{2}\,C_\pi\|\boldsymbol{f}\|_{\boldsymbol{H}(\mathbf{curl},\Omega)}\|\boldsymbol{\lambda}\|_{\boldsymbol{H}^{1/2}_\parallel(\Gamma)}.$$

So, $\gamma_\top\boldsymbol{f}$ belongs to $\boldsymbol{H}^{-1/2}_\parallel(\Gamma)$, with $\|\gamma_\top\boldsymbol{f}\|_{\boldsymbol{H}^{-1/2}_\parallel(\Gamma)}\le\sqrt{2}\,C_\pi\|\boldsymbol{f}\|_{\boldsymbol{H}(\mathbf{curl},\Omega)}$. ■

The duality product of formula (2.27) can be replaced, to reach, for all $(\boldsymbol{f},\boldsymbol{g})\in\boldsymbol{H}(\mathbf{curl},\Omega)\times\boldsymbol{H}^1(\Omega)$,

$$(\boldsymbol{f}|\,\mathbf{curl}\,\boldsymbol{g})-(\mathbf{curl}\,\boldsymbol{f}|\boldsymbol{g})=\langle\gamma_\top\boldsymbol{f},\pi_\top\boldsymbol{g}\rangle_{\boldsymbol{H}^{1/2}_\parallel(\Gamma)}. \tag{3.1}$$

Also, one can reverse the roles of $\boldsymbol{f}$ and $\boldsymbol{g}$, to find, for all $(\boldsymbol{g},\boldsymbol{f})\in\boldsymbol{H}(\mathbf{curl},\Omega)\times\boldsymbol{H}^1(\Omega)$,

$$(\mathbf{curl}\,\boldsymbol{g}|\boldsymbol{f})-(\boldsymbol{g}|\,\mathbf{curl}\,\boldsymbol{f})=\langle\pi_\top\boldsymbol{g},\gamma_\top\boldsymbol{f}\rangle_{\boldsymbol{H}^{1/2}_\perp(\Gamma)}.$$

It is possible to determine precisely the range in $\boldsymbol{H}^{-1/2}_\parallel(\Gamma)$ (respectively in $\boldsymbol{H}^{-1/2}_\perp(\Gamma)$) of $\gamma_\top$ (respectively $\pi_\top$) from $\boldsymbol{H}(\mathbf{curl},\Omega)$. This can be achieved through a simple, yet slightly technical, procedure. It is interesting to consider it in detail, since it includes a definition of first-order differential operators on the boundary, such as the tangential gradient, divergence and curls. As a

matter of fact, these operators are quite useful for studying Maxwell's equations and related topics, for instance, when surface currents or charges occur.

Definition 3.1.7 *The tangential gradient operator,* $\mathbf{grad}_\Gamma$*, defined by* $\mathbf{grad}_\Gamma\, v = \pi_\top(\mathbf{grad}\, v)$*, is a linear continuous mapping from* $H^2(\Omega)$ *to* $\boldsymbol{H}^{1/2}_{\parallel}(\Gamma)$*.*
The tangential vector curl operator, $\mathbf{curl}_\Gamma$*, defined by* $\mathbf{curl}_\Gamma\, v = \gamma_\top(\mathbf{grad}\, v)$*, is a linear continuous mapping from* $H^2(\Omega)$ *to* $\boldsymbol{H}^{1/2}_{\perp}(\Gamma)$*.*

In order to rigorously define these operators on the boundary Γ, one introduces the *ad hoc* trace space, which extends Definition 2.1.52 to the case $s = 3/2$.

Definition 3.1.8 *Let* $H^{3/2}(\Gamma)$ *be the space*

$$H^{3/2}(\Gamma) := \{v_{|\Gamma} \ : \ v \in H^2(\Omega)\}.$$

Endowed with $\|f\|_{H^{3/2}(\Gamma)} := \inf_{v\in H^2(\Omega),\ v_{|\Gamma}=f} \|v\|_{H^2(\Omega)}$*, it is a Hilbert space.*
The dual space of $H^{3/2}(\Gamma)$ *is called* $H^{-3/2}(\Gamma)$*.*

In the same spirit as Definition 2.1.53, one can define $H^{3/2}$ Sobolev spaces on a part of the boundary.

Definition 3.1.9 *Let* Γ' *denote an open subset of* Γ*, with* $meas_\Gamma(\Gamma') > 0$*, such that its boundary is a piecewise smooth submanifold of* Γ*. The space* $\widetilde{H}^{3/2}(\Gamma')$ *is composed of elements of* $H^{3/2}(\Gamma')$ *such that their continuation by zero belongs to* $H^{3/2}(\Gamma)$*. Its dual space is denoted by* $\widetilde{H}^{-3/2}(\Gamma')$*.*

It is clear that $\mathbf{grad}_\Gamma$ (respectively $\mathbf{curl}_\Gamma$), can be considered as a purely surface operator, from $H^{3/2}(\Gamma)$ to $\boldsymbol{H}^{1/2}_{\parallel}(\Gamma)$ (respectively $\boldsymbol{H}^{1/2}_{\perp}(\Gamma)$). Alternate (and equivalent!) definitions of $H^{3/2}(\Gamma)$ are possible. To that aim, it is convenient to introduce the space $H^1(\Gamma)$. Actually, since H^1-regularity is preserved by (bi)-Lipschitz-continuous mappings, it is possible to define the space $H^1(\Gamma)$ and its dual as follows, with a plain, face-by-face definition of the tangential gradient, which coincides with Definition 3.1.7 for the smoother fields of $H^{3/2}(\Gamma)$.

Definition 3.1.10 *Let* $H^1(\Gamma)$ *be the space*

$$H^1(\Gamma) := \{f \in L^2(\Gamma) \ : \mathbf{grad}_\Gamma\, f \in \boldsymbol{L}^2_t(\Gamma)\}. \tag{3.2}$$

Endowed with the graph norm $\|\cdot\|_{H^1(\Gamma)}$*, it is a Hilbert space.*
Its dual space is called $H^{-1}(\Gamma)$*.*

NB. One can substitute $\mathbf{curl}_\Gamma$ for $\mathbf{grad}_\Gamma$ in the definition (3.2).

Proposition 3.1.11 *The following orthogonal decomposition holds:*

$$\boldsymbol{L}^2_t(\Gamma) = \mathbf{grad}_\Gamma(H^1(\Gamma)) \overset{\perp}{\oplus} \mathbf{curl}_\Gamma(H^1(\Gamma)).$$

A third variant of the tangential gradient and tangential vector curl operators, from $H^{1/2}(\Gamma)$, will be introduced later on.
Then, one can establish a new characterization of $H^{3/2}(\Gamma)$. At first glance, one expects that it is made of fields of $H^1(\Gamma)$, the surface gradient of which belongs to $\boldsymbol{H}_{\parallel}^{1/2}(\Gamma)$. This is true! Nevertheless, one can derive an *a priori* weaker, but nonetheless equivalent, characterization.

Theorem 3.1.12 *It holds that*

$$H^{3/2}(\Gamma) = \{f \in H^1(\Gamma) \ : \ \mathbf{grad}_\Gamma\, f \in \boldsymbol{H}_{-}^{1/2}(\Gamma)\}.$$

An equivalent norm on $H^{3/2}(\Gamma)$ is

$$f \mapsto \left\{ \|f\|^2_{H^1(\Gamma)} + \sum_{1\le j\le N_\Gamma} \|f_j\|^2_{H^{3/2}(\Gamma_j)} \right\}^{1/2}.$$

Since the mapping $-\,\mathbf{grad}_\Gamma$, from $H^{3/2}(\Gamma)$ to $\boldsymbol{H}_{\parallel}^{1/2}(\Gamma)$, is continuous, one can introduce its dual operator, from $\boldsymbol{H}_{\parallel}^{-1/2}(\Gamma)$ to $H^{-3/2}(\Gamma)$.

Definition 3.1.13 *The tangential divergence operator,* div_Γ*, from* $\boldsymbol{H}_{\parallel}^{-1/2}(\Gamma)$ *to* $H^{-3/2}(\Gamma)$*, is defined by the duality brackets identity (3.3), for all* $(\boldsymbol{f}, g) \in \boldsymbol{H}_{\parallel}^{-1/2}(\Gamma) \times H^{3/2}(\Gamma)$*,*

$$\langle \mathrm{div}_\Gamma\, \boldsymbol{f}, g\rangle_{H^{3/2}(\Gamma)} = -\langle \boldsymbol{f}, \mathbf{grad}_\Gamma\, g\rangle_{\boldsymbol{H}_{\parallel}^{1/2}(\Gamma)}. \tag{3.3}$$

From these Definitions, it is possible to prove that, given a vector field $\boldsymbol{v}$ of $\boldsymbol{H}(\mathbf{curl}, \Omega)$, the tangential divergence of $\gamma_\top \boldsymbol{v}$ belongs to $H^{-1/2}(\Gamma)$. This is achieved through the lines below, which are excerpts from [67]. This proof is detailed, since it consists of a "dense" summary of the main techniques, which can be used to establish many trace results in $H^{-s}(\Gamma)$-type Sobolev spaces.

Definition 3.1.14 *Let* $\boldsymbol{H}_{\parallel}^{-1/2}(\mathrm{div}_\Gamma, \Gamma)$ *be the space:*

$$\boldsymbol{H}_{\parallel}^{-1/2}(\mathrm{div}_\Gamma, \Gamma) := \{\boldsymbol{f} \in \boldsymbol{H}_{\parallel}^{-1/2}(\Gamma) \ : \ \mathrm{div}_\Gamma\, \boldsymbol{f} \in H^{-1/2}(\Gamma)\}.$$

Theorem 3.1.15 *The mapping* $\gamma_\top$ *is continuous from* $\boldsymbol{H}(\mathbf{curl}, \Omega)$ *to* $\boldsymbol{H}_{\parallel}^{-1/2}(\mathrm{div}_\Gamma, \Gamma)$*.*

Proof. Let us consider an element $\boldsymbol{v}$ of $\boldsymbol{H}(\mathbf{curl}, \Omega)$. On the other hand, since the duality brackets of formula (3.3) involve fields of $H^{3/2}(\Gamma)$, let us consider an element g of $H^2(\Omega)$. Then, let us apply the integration-by-parts formula (3.1) to the couple $(\boldsymbol{v}, \mathbf{grad}\, g)$:

$$(\mathbf{curl}\, \boldsymbol{v} | \,\mathbf{grad}\, g) = -\langle \gamma_\top \boldsymbol{v}, \mathbf{grad}_\Gamma\, g\rangle_{\boldsymbol{H}_{\parallel}^{1/2}(\Gamma)} = \langle \mathrm{div}_\Gamma(\gamma_\top \boldsymbol{v}), \gamma_0 g\rangle_{H^{3/2}(\Gamma)}.$$

Now, $\lambda = \gamma_0 g$ belongs to $H^{1/2}(\Omega)$. Recall that γ_0 is surjective from $H^1(\Omega)$ to $H^{1/2}(\Gamma)$, so it has a continuous right-inverse. In other words, there exists $g' \in H^1(\Omega)$, such that

$$\gamma_0 g' = \lambda \text{ and } \|g'\|_{H^1(\Omega)} \leq C_0 \|\lambda\|_{H^{1/2}(\Gamma)}.$$

Above, the constant, C_0 is independent of λ.
Next, $g'' = g - g'$ belongs to $H_0^1(\Omega)$, so that $\mathbf{grad}\, g''$ is in $\boldsymbol{H}_0(\mathbf{curl}, \Omega)$ (cf. Proposition 2.2.10). According to Theorem 2.2.14, $\mathbf{curl}\, \boldsymbol{v}$ is orthogonal to $\mathbf{grad}\, g''$ in $\boldsymbol{L}^2(\Omega)$, hence it follows that

$$\langle \mathrm{div}_\Gamma(\gamma_\top \boldsymbol{v}), \lambda \rangle_{H^{3/2}(\Gamma)} = (\mathbf{curl}\, \boldsymbol{v} | \, \mathbf{grad}\, g'), \text{ and}$$
$$\left| \langle \mathrm{div}_\Gamma(\gamma_\top \boldsymbol{v}), \lambda \rangle_{H^{3/2}(\Gamma)} \right| \leq C_0 \|\boldsymbol{v}\|_{\boldsymbol{H}(\mathbf{curl},\Omega)} \|\lambda\|_{H^{1/2}(\Gamma)}.$$

Then, by a density argument, $\mathrm{div}_\Gamma(\gamma_\top \boldsymbol{v})$ belongs to $H^{-1/2}(\Gamma)$. Indeed, one remarks that, since $H^2(\Omega)$ is dense in $H^1(\Omega)$, $\gamma_0(H^2(\Omega)) = H^{3/2}(\Gamma)$ is dense in $\gamma_0(H^1(\Omega)) = H^{1/2}(\Gamma)$. Finally, we can write

$$\| \mathrm{div}_\Gamma(\gamma_\top \boldsymbol{v}) \|_{H^{-1/2}(\Gamma)} \leq C_0 \|\boldsymbol{v}\|_{\boldsymbol{H}(\mathbf{curl},\Omega)}.$$

This concludes the proof. ■

An identity relating traces can then be established.

Corollary 3.1.16 *Let $\boldsymbol{v} \in \boldsymbol{H}(\mathbf{curl}, \Omega)$, then*

$$\mathrm{div}_\Gamma(\boldsymbol{v} \times \boldsymbol{n}_{|\Gamma}) = \mathbf{curl}\, \boldsymbol{v} \cdot \boldsymbol{n}_{|\Gamma} \text{ in } H^{-1/2}(\Gamma).$$

Proof. One has (see the previous proof), for all $(\boldsymbol{v}, g) \in \boldsymbol{H}(\mathbf{curl}, \Omega) \times H^1(\Omega)$,

$$\langle \mathrm{div}_\Gamma(\gamma_\top \boldsymbol{v}), \gamma_0 g \rangle_{H^{1/2}(\Gamma)} = (\mathbf{curl}\, \boldsymbol{v} | \, \mathbf{grad}\, g).$$

Integrating by parts once more (cf. (2.25)), the right-hand side is equal to

$$(\mathbf{curl}\, \boldsymbol{v} | \, \mathbf{grad}\, g) = \langle \gamma_n(\mathbf{curl}\, \boldsymbol{v}), \gamma_0 g \rangle_{H^{1/2}(\Gamma)}.$$

■

NB. As a particular case, one recovers that $\mathbf{curl}\, \boldsymbol{v} \cdot \boldsymbol{n}_{|\Gamma} = 0$, for $\boldsymbol{v}$ in $\boldsymbol{H}_0(\mathbf{curl}, \Omega)$, i.e., one result of Proposition 2.2.10.

One can then substitute, respectively, $\pi_\top$ for $\gamma_\top$, $\mathbf{curl}_\Gamma$ for $-\mathbf{grad}_\Gamma$, and curl_Γ for div_Γ. This is achieved by...

Definition 3.1.17 *The tangential curl operator, curl_Γ, from $\boldsymbol{H}_\perp^{-1/2}(\Gamma)$ to $H^{-3/2}(\Gamma)$, is defined by the duality brackets identity (3.4), for all $(\boldsymbol{f}, g) \in \boldsymbol{H}_\perp^{-1/2}(\Gamma) \times H^{3/2}(\Gamma)$,*

$$\langle \mathrm{curl}_\Gamma\, \boldsymbol{f}, g \rangle_{H^{3/2}(\Gamma)} = \langle \boldsymbol{f}, \mathbf{curl}_\Gamma\, g \rangle_{\boldsymbol{H}_\perp^{1/2}(\Gamma)}. \tag{3.4}$$

Let $\boldsymbol{H}_{\perp}^{-1/2}(\mathrm{curl}_{\Gamma}, \Gamma)$ *be the space:*

$$\boldsymbol{H}_{\perp}^{-1/2}(\mathrm{curl}_{\Gamma}, \Gamma) := \{\boldsymbol{f} \in \boldsymbol{H}_{\perp}^{-1/2}(\Gamma) \ : \ \mathrm{curl}_{\Gamma}\, \boldsymbol{f} \in H^{-1/2}(\Gamma)\}.$$

And according to the result below, whose proof is a simple transposition...

Theorem 3.1.18 *The mapping* $\pi_{\top}$ *is continuous from* $\boldsymbol{H}(\mathbf{curl}, \Omega)$ *to* $\boldsymbol{H}_{\perp}^{-1/2}(\mathrm{curl}_{\Gamma}, \Gamma)$.

The last step consists in establishing that $\boldsymbol{H}_{\parallel}^{-1/2}(\mathrm{div}_{\Gamma}, \Gamma)$ and $\boldsymbol{H}_{\perp}^{-1/2}(\mathrm{curl}_{\Gamma}, \Gamma)$ are dual spaces. Consequently, a new version of the curl-curl integration-by-parts formula can be justified, which involves two fields of $\boldsymbol{H}(\mathbf{curl}, \Omega)$. To that aim, one introduces a third variant of the tangential gradient operator, from $H^{1/2}(\Gamma)$ to $\boldsymbol{H}_{\perp}^{-1/2}(\Gamma)$. As a starting point, consider

$$C_e^{\infty}(\overline{\Omega}) := \{f \in C^{\infty}(\overline{\Omega}) \ : \ f = 0 \text{ in a neighborhood of } \cup_{(i,j)\in\mathcal{N}_E} e_{ij}\}.$$

Proposition 3.1.19 *The space* $C_e^{\infty}(\overline{\Omega})$ *is dense in* $H^1(\Omega)$.

This density result is proven in [161] or [90]. Then, together with the "plain", face-by-face definition of the tangential gradient, one checks that $\mathbf{grad}_{\Gamma}\, \lambda$ can be defined, for $\lambda \in H^{1/2}(\Gamma) = \gamma_0(H^1(\Omega))$, and the following holds:

$$\forall f \in H^1(\Omega), \quad \mathbf{grad}_{\Gamma}(f_{|\Gamma}) = \pi_{\top}(\mathbf{grad}\, f).$$

Recall that, according to Theorem 3.1.18, $\pi_{\top}(\mathbf{grad}\, f)$ belongs to $\boldsymbol{H}_{\perp}^{-1/2}(\Gamma)$. So, one concludes with the results below concerning the third tangential gradient operator.

Proposition 3.1.20 *The mapping* $\mathbf{grad}_{\Gamma}$ *is continuous from* $H^{1/2}(\Gamma)$ *to* $\boldsymbol{H}_{\perp}^{-1/2}(\Gamma)$. *Let* $f \in H^1(\Omega)$*:* $\mathbf{grad}_{\Gamma}(f_{|\Gamma}) = \pi_{\top}(\mathbf{grad}\, f)$ *in* $\boldsymbol{H}_{\perp}^{-1/2}(\Gamma)$.

This third tangential gradient operator coincides with the other two, respectively, from $H^1(\Gamma)$ and from $H^{3/2}(\Gamma)$. Again, one can similarly introduce the curl operator $\mathbf{curl}_{\Gamma}$ from $H^{1/2}(\Gamma)$ to $\boldsymbol{H}_{\parallel}^{-1/2}(\Gamma)$.

Proposition 3.1.21 *The mapping* $\mathbf{curl}_{\Gamma}$ *is continuous from* $H^{1/2}(\Gamma)$ *to* $\boldsymbol{H}_{\parallel}^{-1/2}(\Gamma)$. *Let* $f \in H^1(\Omega)$*:* $\mathbf{curl}_{\Gamma}(f_{|\Gamma}) = (\mathbf{grad}\, f \times \boldsymbol{n})_{|\Gamma}$ *in* $\boldsymbol{H}_{\parallel}^{-1/2}(\Gamma)$.

NB. As a particular case of both Propositions, one recovers that $\pi_{\top}(\mathbf{grad}\, f) = 0$ and $(\mathbf{grad}\, f \times \boldsymbol{n})_{|\Gamma} = 0$, for f in $H^1(\Omega)$ with $f_{|\Gamma} = 0$, i.e., one result of Proposition 2.2.10.

The dual operators of $-\,\mathbf{grad}_{\Gamma}$ and $\mathbf{curl}_{\Gamma}$, operating from $H^{1/2}(\Gamma)$, are, respectively,

$$\begin{cases} \mathrm{div}_{\Gamma} \ : \ \boldsymbol{H}_{\perp}^{1/2}(\Gamma) \to H^{-1/2}(\Gamma) \\ \mathrm{curl}_{\Gamma} \ : \ \boldsymbol{H}_{\parallel}^{1/2}(\Gamma) \to H^{-1/2}(\Gamma) \end{cases}.$$

To properly define the duality between $\boldsymbol{H}_{\parallel}^{-1/2}(\mathrm{div}_\Gamma, \Gamma)$ and $\boldsymbol{H}_{\perp}^{-1/2}(\mathrm{curl}_\Gamma, \Gamma)$, one needs a final tool, namely decompositions of elements of those two function spaces. Let the Laplace-Beltrami operator be defined as

$$\forall f \in H^1(\Gamma), \quad \Delta_\Gamma f := \mathrm{div}_\Gamma(\mathbf{grad}_\Gamma f) := -\,\mathrm{curl}_\Gamma(\mathbf{curl}_\Gamma f),$$

together with the related function space below:

$$\mathcal{H}(\Gamma) := \{f \in H^1_{zmv}(\Gamma) \ : \ \Delta_\Gamma f \in H^{-1/2}(\Gamma)\}.$$

Theorem 3.1.22 *The following decompositions hold:*

$$\boldsymbol{H}_{\parallel}^{-1/2}(\mathrm{div}_\Gamma, \Gamma) = \mathbf{curl}_\Gamma(H^{1/2}(\Gamma)) + \boldsymbol{H}_{\perp}^{1/2}(\Gamma).$$
$$\boldsymbol{H}_{\perp}^{-1/2}(\mathrm{curl}_\Gamma, \Gamma) = \mathbf{grad}_\Gamma(H^{1/2}(\Gamma)) + \boldsymbol{H}_{\parallel}^{1/2}(\Gamma).$$

Moreover, the following direct *decompositions hold:*

$$\boldsymbol{H}_{\parallel}^{-1/2}(\mathrm{div}_\Gamma, \Gamma) = \mathbf{curl}_\Gamma(H^{1/2}_{zmv}(\Gamma)) \oplus \mathbf{grad}_\Gamma(\mathcal{H}(\Gamma)).$$
$$\boldsymbol{H}_{\perp}^{-1/2}(\mathrm{curl}_\Gamma, \Gamma) = \mathbf{grad}_\Gamma(H^{1/2}_{zmv}(\Gamma)) \oplus \mathbf{curl}_\Gamma(\mathcal{H}(\Gamma)).$$

As a side-product, one can prove the important surjectivity results below.

Corollary 3.1.23 *The mapping $\gamma_\top$ is surjective from $\boldsymbol{H}(\mathbf{curl}, \Omega)$ to $\boldsymbol{H}_{\parallel}^{-1/2}(\mathrm{div}_\Gamma, \Gamma)$. The mapping $\pi_\top$ is surjective from $\boldsymbol{H}(\mathbf{curl}, \Omega)$ to $\boldsymbol{H}_{\perp}^{-1/2}(\mathrm{curl}_\Gamma, \Gamma)$.*

Since $\mathbf{curl}_\Gamma f_1$ and $\mathbf{grad}_\Gamma f_2$ are "orthogonal"[1] for $f_1, f_2 \in H^{1/2}(\Gamma)$, one can introduce a duality product between $\boldsymbol{H}_{\parallel}^{-1/2}(\mathrm{div}_\Gamma, \Gamma)$ and $\boldsymbol{H}_{\perp}^{-1/2}(\mathrm{curl}_\Gamma, \Gamma)$, which is the scalar product of $\boldsymbol{L}^2_t(\Gamma)$ when the elements are smooth enough.

Definition 3.1.24 *Let $(\boldsymbol{u}_1, \boldsymbol{u}_2) \in \boldsymbol{H}_{\parallel}^{-1/2}(\mathrm{div}_\Gamma, \Gamma) \times \boldsymbol{H}_{\perp}^{-1/2}(\mathrm{curl}_\Gamma, \Gamma)$ be decomposed as*

$$\boldsymbol{u}_1 = \mathbf{curl}_\Gamma f_1 + \boldsymbol{v}_1, \quad f_1 \in H^{1/2}(\Gamma),\ \boldsymbol{v}_1 \in \boldsymbol{H}_{\perp}^{1/2}(\Gamma)\,,$$
$$\boldsymbol{u}_2 = \mathbf{grad}_\Gamma f_2 + \boldsymbol{v}_2, \quad f_2 \in H^{1/2}(\Gamma),\ \boldsymbol{v}_2 \in \boldsymbol{H}_{\parallel}^{1/2}(\Gamma).$$

Then, the duality product of $\boldsymbol{u}_1$ and $\boldsymbol{u}_2$ is equal to:

$${}_\gamma\langle \boldsymbol{u}_1, \boldsymbol{u}_2\rangle_\pi = \langle \mathbf{curl}_\Gamma f_1, \boldsymbol{v}_2\rangle_{\boldsymbol{H}_{\parallel}^{1/2}(\Gamma)} + \langle \mathbf{grad}_\Gamma f_2, \boldsymbol{v}_1\rangle_{\boldsymbol{H}_{\perp}^{1/2}(\Gamma)} + (\boldsymbol{v}_1, \boldsymbol{v}_2)_{\boldsymbol{L}^2(\Gamma)}.$$

[1] This is a *generalized* orthogonality property, in the sense that, given $f_1, f_2 \in H^{1/2}(\Gamma)$, there exist two sequences of elements of $H^1(\Gamma)$, respectively $(f_1^k)_k$ and $(f_2^k)_k$, such that $f_i^k \to f_i$ in $H^{1/2}(\Gamma)$ for $i = 1, 2$, and one has

$$\forall k, \ell, \quad (\mathbf{curl}_\Gamma f_1^k, \mathbf{grad}_\Gamma f_2^\ell)_{\boldsymbol{L}^2(\Gamma)} = 0.$$

Theorem 3.1.25 *One has the following duality identity:*

$$\left(\boldsymbol{H}_{\parallel}^{-1/2}(\mathrm{div}_{\Gamma},\Gamma)\right)' = \boldsymbol{H}_{\perp}^{-1/2}(\mathrm{curl}_{\Gamma},\Gamma).$$

In addition, one has a generalized integration-by-parts formula, for all $(\boldsymbol{f},\boldsymbol{g}) \in \boldsymbol{H}(\mathbf{curl},\Omega)\times\boldsymbol{H}(\mathbf{curl},\Omega)$*:*

$$(\boldsymbol{f}|\,\mathbf{curl}\,\boldsymbol{g}) - (\mathbf{curl}\,\boldsymbol{f}|\boldsymbol{g}) = {}_{\gamma}\langle\gamma_{\top}\boldsymbol{f},\pi_{\top}\boldsymbol{g}\rangle_{\pi}. \tag{3.5}$$

Most results carry out to fields defined on a part of the boundary only (and equal to 0 elsewhere). We refer the reader to [67, 68] for the details. Briefly, let us consider an open, topologically trivial subset[2] of Γ, called Γ', with $0 < meas_{\Gamma}(\Gamma') < meas_{\Gamma}(\Gamma)$, such that its boundary $\partial\Gamma'$ is a piecewise smooth submanifold of Γ, and let $\Gamma'' = int(\Gamma\setminus\Gamma')$. Let $\boldsymbol{\nu}'$ be the unit outward normal vector to $\partial\Gamma'$, and let $\boldsymbol{\tau}'$ be a unit tangent vector to $\partial\Gamma'$. One first defines

$$\widetilde{\boldsymbol{H}}_{\parallel}^{1/2}(\Gamma') := \{\boldsymbol{v}\in\boldsymbol{H}_{\parallel}^{1/2}(\Gamma')\ :\ \tilde{\boldsymbol{v}}\in\boldsymbol{H}_{\parallel}^{1/2}(\Gamma)\}.$$

Above, $\tilde{\boldsymbol{v}}$ is the continuation of $\boldsymbol{v}$ by $\mathbf{0}$ to Γ. Then, one introduces

$$\widetilde{\boldsymbol{H}}_{\parallel}^{-1/2}(\mathrm{div}_{\Gamma},\Gamma') := \{\boldsymbol{f}\in\widetilde{\boldsymbol{H}}_{\parallel}^{-1/2}(\Gamma')\ :\ \mathrm{div}_{\Gamma}\,\boldsymbol{f}\in\widetilde{H}^{-1/2}(\Gamma')\},$$

where div_{Γ} maps elements of $\widetilde{\boldsymbol{H}}_{\parallel}^{-1/2}(\Gamma')$ (the dual space of $\widetilde{\boldsymbol{H}}_{\parallel}^{1/2}(\Gamma')$) to $\widetilde{H}^{-3/2}(\Gamma')$. Similarly, one can introduce

$$\widetilde{\boldsymbol{H}}_{\perp}^{-1/2}(\mathrm{curl}_{\Gamma},\Gamma') := \{\boldsymbol{f}\in\widetilde{\boldsymbol{H}}_{\perp}^{-1/2}(\Gamma')\ :\ \mathrm{curl}_{\Gamma}\,\boldsymbol{f}\in\widetilde{H}^{-1/2}(\Gamma')\}.$$

Theorem 3.1.26 *The mapping* $\gamma_{\top'}\ :\ \boldsymbol{f}\mapsto\boldsymbol{f}\times\boldsymbol{n}_{|\Gamma'}$ *is linear, continuous and surjective from* $\boldsymbol{H}(\mathbf{curl},\Omega)$ *to* $\widetilde{\boldsymbol{H}}_{\parallel}^{-1/2}(\mathrm{div}_{\Gamma},\Gamma')$*.*
The mapping $\pi_{\top'}\ :\ \boldsymbol{f}\mapsto\boldsymbol{n}\times(\boldsymbol{f}\times\boldsymbol{n})_{|\Gamma'}$ *is linear, continuous and surjective from* $\boldsymbol{H}(\mathbf{curl},\Omega)$ *to* $\widetilde{\boldsymbol{H}}_{\perp}^{-1/2}(\mathrm{curl}_{\Gamma},\Gamma')$*.*

Next, define

$$\boldsymbol{H}_{0,\Gamma''}(\mathbf{curl},\Omega) := \{\boldsymbol{f}\in\boldsymbol{H}(\mathbf{curl},\Omega)\ :\ \boldsymbol{f}\times\boldsymbol{n}_{|\Gamma''}=0\},$$

which is a closed subspace of $\boldsymbol{H}(\mathbf{curl},\Omega)$. To build the *ad hoc* space of tangential traces on Γ' for elements of $\boldsymbol{H}_{0,\Gamma''}(\mathbf{curl},\Omega)$, one needs to consider

$$\boldsymbol{H}_{\parallel,0}^{-1/2}(\mathrm{div}_{\Gamma},\Gamma') := \{\boldsymbol{f}\in\boldsymbol{H}_{\parallel}^{-1/2}(\mathrm{div}_{\Gamma},\Gamma')\ :\ t_{\boldsymbol{\nu}'}(\boldsymbol{f})=0\},$$

where $t_{\boldsymbol{\nu}'}(\boldsymbol{f}) = \boldsymbol{f}\cdot\boldsymbol{\nu}'_{|\partial\Gamma'}$ is defined in a weak sense.
Introduce the function space:

$$\mathcal{H}_{\nu}(\Gamma') := \{f\in H^1_{zmv}(\Gamma')\ :\ \Delta_{\Gamma}f\in H^{-1/2}(\Gamma'),\ t_{\boldsymbol{\nu}'}(\mathbf{grad}_{\Gamma}\,f)=0\}.$$

[2] We assume here that $\partial\Gamma'\cap\partial\Gamma''\neq\emptyset$. Indeed, it is simple to check that the preceeding study carries over to the case when $\partial\Gamma'\cap\partial\Gamma''=\emptyset$.

Proposition 3.1.27 *The following direct decomposition holds:*

$$\boldsymbol{H}^{-1/2}_{\|,0}(\mathrm{div}_\Gamma, \Gamma') = \mathbf{curl}_\Gamma(\widetilde{H}^{1/2}(\Gamma')) \oplus \mathbf{grad}_\Gamma(\mathcal{H}_\nu(\Gamma')).$$

Similarly, for the space of tangential components traces on Γ' for elements of $\boldsymbol{H}_{0,\Gamma''}(\mathbf{curl}, \Omega)$, we consider

$$\boldsymbol{H}^{-1/2}_{\perp,0}(\mathrm{curl}_\Gamma, \Gamma') := \{\boldsymbol{f} \in \boldsymbol{H}^{-1/2}_{\perp}(\mathrm{curl}_\Gamma, \Gamma') \ : \ t_{\boldsymbol{\tau}'}(\boldsymbol{f}) = 0\},$$

where $t_{\boldsymbol{\tau}'}(\boldsymbol{f}) = \boldsymbol{f} \cdot \boldsymbol{\tau}'_{|\partial\Gamma'}$ is defined in a weak sense. Note that one can also derive a direct decomposition of $\boldsymbol{H}^{-1/2}_{\perp,0}(\mathrm{curl}_\Gamma, \Gamma')$, in the same spirit as in Proposition 3.1.27.

Theorem 3.1.28 *The mapping $\gamma^0_{\top'} \ : \ \boldsymbol{f} \mapsto \boldsymbol{f} \times \boldsymbol{n}_{|\Gamma'}$ is linear, continuous and surjective from $\boldsymbol{H}_{0,\Gamma''}(\mathbf{curl}, \Omega)$ to $\boldsymbol{H}^{-1/2}_{\|,0}(\mathrm{div}_\Gamma, \Gamma')$.*
The mapping $\pi^0_{\top'} \ : \ \boldsymbol{f} \mapsto \boldsymbol{n} \times (\boldsymbol{f} \times \boldsymbol{n})_{|\Gamma'}$ is linear, continuous and surjective from $\boldsymbol{H}_{0,\Gamma''}(\mathbf{curl}, \Omega)$ to $\boldsymbol{H}^{-1/2}_{\perp,0}(\mathrm{curl}_\Gamma, \Gamma')$.

One finally obtains extensions of the duality results and new integration-by-parts formulas.

Theorem 3.1.29 *One has the following duality identities:*

$$\left(\boldsymbol{H}^{-1/2}_{\|,0}(\mathrm{div}_\Gamma, \Gamma')\right)' = \widetilde{\boldsymbol{H}}^{-1/2}_{\perp}(\mathrm{curl}_\Gamma, \Gamma'),$$
$$\left(\widetilde{\boldsymbol{H}}^{-1/2}_{\|}(\mathrm{div}_\Gamma, \Gamma')\right)' = \boldsymbol{H}^{-1/2}_{\perp,0}(\mathrm{curl}_\Gamma, \Gamma').$$

In addition, one has generalized integration-by-parts formulas, for all $(\boldsymbol{f}, \boldsymbol{g}) \in \boldsymbol{H}_{0,\Gamma''}(\mathbf{curl}, \Omega) \times \boldsymbol{H}(\mathbf{curl}, \Omega)$:

$$(\boldsymbol{f}|\,\mathbf{curl}\,\boldsymbol{g}) - (\mathbf{curl}\,\boldsymbol{f}|\boldsymbol{g}) = {}_{\gamma'_0}\langle \gamma^0_{\top'}\boldsymbol{f}, \pi_{\top'}\boldsymbol{g}\rangle_{\pi'}\ ; \ \textit{or},$$
$$(\boldsymbol{f}|\,\mathbf{curl}\,\boldsymbol{g}) - (\mathbf{curl}\,\boldsymbol{f}|\boldsymbol{g}) = -{}_{\gamma'}\langle \gamma_{\top'}\boldsymbol{g}, \pi^0_{\top'}\boldsymbol{f}\rangle_{\pi'_0}.$$

3.2 Scalar and vector potentials: the analyst's and topologist's points of view

We discuss two different mathematical points of view, namely the analyst's and topologist's, concerning the existence of potentials for curl-free fields. We then reconcile these two points of view and define a general framework.

For the analyst [125], the main issue is the *regularity* of the boundary. Accordingly, the analyst's hypothesis on Ω is:
(Ana) *"Ω is an open set of $\mathbb{R}^3$ with a Lipschitz boundary".*

For the topologist [127, 128], the main issue is *(co)homology* and, of particular interest for our purpose, the existence of single-valued potentials to curl-free smooth fields. In other words, given a vector field $\boldsymbol{v}$ defined on Ω such that $\mathbf{curl}\,\boldsymbol{v} = 0$ in Ω, does there exist a continuous *single-valued* function p such that $\boldsymbol{v} = \mathbf{grad}\,p$? The answer to this question can be found in (co)homology theory, which results in the topologist's dual hypothesis:
either $\mathbf{(Top)}_{I=0}$ *"given any vector field $\boldsymbol{v} \in \boldsymbol{C}^1(\Omega)$ such that $\mathbf{curl}\,\boldsymbol{v} = 0$ in Ω, there exists $p \in C^0(\Omega)$ such that $\boldsymbol{v} = \mathbf{grad}\,p$ on Ω"*;
or $\mathbf{(Top)}_{I>0}$ *"there exist I non-intersecting manifolds, $\Sigma_1, \ldots, \Sigma_I$, with boundaries $\partial\Sigma_i \subset \Gamma$ such that, if we let $\dot{\Omega} = \Omega \setminus \bigcup_{i=1}^{I} \Sigma_i$, given any vector field $\boldsymbol{v} \in \boldsymbol{C}^1(\Omega)$ such that $\mathbf{curl}\,\boldsymbol{v} = 0$ in Ω, there exists $\dot{p} \in C^0(\dot{\Omega})$ such that $\boldsymbol{v} = \mathbf{grad}\,\dot{p}$ on $\dot{\Omega}$"*.

Here, I is equal to the *minimal* number of required cuts $(\Sigma_i)_i$. Mathematically, I is equal to $\beta_1(\Omega)$, the first Betti number. Note that according to the above, $I = 0$ is an admissible value, in which case the existence of continuous single-valued potentials is guaranteed on Ω, whereas $I > 0$ corresponds to the case when cuts must be introduced. This is the reason why we use the notations $\mathbf{(Top)}_{I=0}$ and $\mathbf{(Top)}_{I>0}$ to discriminate the two cases. When $I = 0$, the set Ω is said to be *topologically trivial*.

Remark 3.2.1 *Recall that, according to* homotopy *theory, a connected set is* simply connected *if every closed curve can be contracted to a point via continuous transformations. It is often assumed that each connected component of Ω must be simply connected to guarantee the existence of the continuous single-valued potential: in other words, one usually states in $\mathbf{(Top)}_{I=0}$ (respectively $\mathbf{(Top)}_{I>0}$) that Ω (respectively $\dot{\Omega}$) is simply connected. However, this property is only a sufficient condition and, from a topologist's point of view [127], the correct assumption is of a (co)homological nature, cf.* **(Top)** *as stated above.*

As far as the regularity of the manifolds $(\Sigma_i)_i$ is concerned, let us first assume a topologist's point of view. Finding cuts to enforce $\mathbf{(Top)}_{I>0}$ is inexpensive in terms of algorithmic complexity (see [128, Chapter 6] for details). Computationally speaking, one can build cuts that are piecewise plane, starting from a tetrahedral mesh that constitutes a coarse approximation of the set. So, the regularity issue simply involves the ability to deliver *piecewise plane cuts*.

In general, cuts leave a connected set connected, so, to fix ideas, we assume that $\dot{\Omega}$ has the *same number* of connected components as Ω. This ensures that scalar fields with vanishing gradients in $\dot{\Omega}$ are equal to constant fields on each connected component. On the other hand, from the analyst's point of view, one is content with a set $\dot{\Omega}$ with a *pseudo-Lipschitz boundary*, cf. [10].

Definition 3.2.2 *Let $\mathcal{O}$ be an open subset of $\mathbb{R}^n$. Its boundary $\partial\mathcal{O}$ is pseudo-Lipschitz if, at each point $\boldsymbol{x}$ of $\partial\mathcal{O}$, there exist an integer $r(\boldsymbol{x})$ equal to 1 or 2*

and a strictly positive real number β_0 such that for all real numbers $\beta \in]0, \beta_0[$, the intersection of $\mathcal{O}$ with the ball centered at $\boldsymbol{x}$ of radius β possesses $r(\boldsymbol{x})$ connected components, each one with a Lipschitz boundary.

Fortunately, the two notions are compatible! As a matter of fact, an open subset of $\mathbb{R}^3$ with a piecewise plane boundary is Lipschitz (except for very pathological cases, see one illustration in Figure 2.1). So, whenever needed, either assumption $\mathbf{(Top)}_{I=0}$ is fulfilled or assumption $\mathbf{(Top)}_{I>0}$ is fulfilled with, in the latter case, existence of piecewise plane cuts $(\Sigma_i)_{1\leq i\leq I}$ such that the resulting $\dot{\Omega} = \Omega \setminus \bigcup_{i=1}^{I} \Sigma_i$ is pseudo-Lipschitz.[3] We denote by $\boldsymbol{n}$ (no index) a unit normal vector field to $(\Sigma_i)_{1\leq i\leq I}$, and jumps are defined as in Definition 2.1.67. Given $v \in L^2(\dot{\Omega})$ (respectively $\boldsymbol{v} \in \boldsymbol{L}^2(\dot{\Omega})$), we denote by $\widetilde{v}$ (respectively $\widetilde{\boldsymbol{v}}$) its continuation to $L^2(\Omega)$ (respectively $\boldsymbol{L}^2(\Omega)$). On the other hand, given $v \in L^2(\Omega)$ (respectively $\boldsymbol{v} \in \boldsymbol{L}^2(\Omega)$), its restriction to $\dot{\Omega}$ is simply written as v (respectively $\boldsymbol{v}$), and likewise for subspaces of $L^2(\Omega)$ (respectively $\boldsymbol{L}^2(\Omega)$).
Generically, we denote constant fields by the symbol *cst*, and by $P(\dot{\Omega})$, the subspace of $H^1(\dot{\Omega})$:

$$P(\dot{\Omega}) := \{q \in H^1(\dot{\Omega}) \ : \ [q]_{\Sigma_i} = cst_i, \ 1 \leq i \leq I\}.$$

Above, for $i \neq j$, cst_i and cst_j can be different.
Finally, when the boundary Γ is not connected, we let $(\Gamma_k)_{0\leq k\leq K}$ be its (maximal) connected components, Γ_0 being the boundary of the unbounded component of the exterior open set $\mathbb{R}^3 \setminus \overline{\Omega}$. We let $\Gamma_0 = \Gamma$ if the boundary is connected. We introduce the subspace $H^1_{\partial\Omega}(\Omega)$ of $H^1(\Omega)$:

$$H^1_{\partial\Omega}(\Omega) := \{q \in H^1(\Omega) \ : \ q_{|\Gamma_0} = 0, \ q_{|\Gamma_k} = cst_k, \ 1 \leq k \leq K\}.$$

Above, for $k \neq k'$, cst_k and $cst_{k'}$ can be different.
At some point, we also use a (spherical) domain $\mathcal{O}$ such that $\overline{\Omega} \subset \mathcal{O}$, and denote by $(\Omega_k)_{0\leq k\leq K}$ the connected components of $\mathcal{O} \setminus \overline{\Omega}$ with boundary Γ_k for $k > 0$, and $\Gamma_0 \cup \partial\mathcal{O}$ for $k = 0$. According to the Alexander duality theory [128], it holds that $\beta_1(\Omega) = \beta_1(\mathcal{O} \setminus \overline{\Omega})$, i.e., the (minimal) number of "inside cuts" is always equal to the (minimal) number of "outside cuts".
A few existence results are stated without proof. In this case, the proof can be found in the accompanying bibliographical references. For completeness, note that we provide footnotes to check the well-posedness of the auxiliary problems we introduce. Let us mention that for the ease of exposition in §§3.3-3.5, results have been grouped by category, namely "scalar" or "vector" potentials, and in the latter case, "with" or "without" vanishing normal trace. However, the logical sequence of the main mathematical results can be summarized as follows:
Step 1: the scalar theorems 3.3.1-3.3.2 and the vector theorem 3.4.1 ;
Step 2: the scalar theorem 3.3.9 uses the vector theorem 3.4.1 ;

[3] One has $meas(\dot{\Omega}) = meas(\Omega)$.

Step 3: the first Weber inequality theorem 3.4.3 and the related compact imbedding result of theorem 3.4.4 use Steps 1-2 and their by-products;
Step 4: the second Weber inequality theorem 3.5.3 and the related compact imbedding result of theorem 3.5.4 use Step 3 and its by-products.

3.3 Extraction of scalar potentials and consequences

We consider first the case of curl-free fields of $\boldsymbol{L}^2(\Omega)$. Let us begin with the fundamental result proven[4] in [118, Chapter I] and in [165, Chapter 3].

Theorem 3.3.1 *Let Ω be either a domain, or a bounded, open and connected set with a pseudo-Lipschitz boundary. Assume that Ω is topologically trivial. Then, given $\boldsymbol{v} \in \boldsymbol{L}^2(\Omega)$, it holds that*

$$\mathbf{curl}\,\boldsymbol{v} = 0 \text{ in } \Omega \iff \exists p \in H^1(\Omega),\ \boldsymbol{v} = \mathbf{grad}\,p.$$

The scalar potential p is unique up to a constant, and $|p|_{H^1(\Omega)} = \|\boldsymbol{v}\|_{\boldsymbol{L}^2(\Omega)}$.

Next, we have the more general result below, proven in [10] for smooth cuts. We provide the main steps of the proof, which is slightly different than the one proposed in [10], according to the assumptions we made on the regularity of the cuts.

Theorem 3.3.2 *Let Ω be a domain such that $\mathbf{(Top)}_{I>0}$ is fulfilled. Then, given $\boldsymbol{v} \in \boldsymbol{L}^2(\Omega)$, it holds that*

$$\mathbf{curl}\,\boldsymbol{v} = 0 \text{ in } \Omega \iff \exists \dot{p} \in P(\dot{\Omega}),\ \boldsymbol{v} = \widetilde{\mathbf{grad}\,\dot{p}}.$$

The scalar potential $\dot{p}$ is unique up to a constant, and $|\dot{p}|_{H^1(\dot{\Omega})} = \|\boldsymbol{v}\|_{\boldsymbol{L}^2(\Omega)}$.

Proof. We remark that, if there exists $\dot{p} \in P(\dot{\Omega})$ such that $\boldsymbol{v} = \widetilde{\mathbf{grad}\,\dot{p}}$, then obviously $\mathbf{curl}\,\boldsymbol{v} = 0$ in $\dot{\Omega}$. One can then prove that $\mathbf{curl}\,\boldsymbol{v} = 0$ in Ω by using the tangential gradient $\mathbf{grad}_\Gamma$ of Proposition 3.1.20, which leads easily to $[\pi_\top \boldsymbol{v}]_{\Sigma_i} = \mathbf{grad}_\Gamma([\dot{p}]_{\Sigma_i}) = 0$, for $1 \le i \le I$, plus Proposition 2.2.32 to conclude.
Conversely, one first uses Theorem 3.3.1 in $\dot{\Omega}$ to find $\dot{p} \in H^1(\dot{\Omega})$ such that $\boldsymbol{v} = \mathbf{grad}\,\dot{p}$ in $\dot{\Omega}$. Then, as $\boldsymbol{v}$ belongs to $\boldsymbol{H}(\mathbf{curl}, \Omega)$, it follows that $[\pi_\top \boldsymbol{v}]_{\Sigma_i} = 0$, for all i. Using again the tangential gradient as defined in Proposition 3.1.20,

[4] This (very technical) result is proven in two steps:
1. One introduces a sequence of nested topologically trivial domains $(\Omega_p)_p$ such that $\overline{\Omega_p} \subset \Omega$ for all p, $\cup_p \Omega_p = \Omega$. The curl-free field is regularized by convolution over $\mathbb{R}^3$, so that its restriction belongs to $\boldsymbol{C}^1(\Omega_p)$, with vanishing curl in Ω_p. One may then apply the classical Stokes' Theorem in Ω_p to this smooth field and write it as gradient there, with a scalar potential that belongs to $C^2(\Omega_p)$.
2. One then goes to the limit ($p \to \infty$) to derive the existence of a scalar potential in Ω that belongs to $H^1(\Omega)$, with the help of the Lions' Lemma (Theorem 2.1.34).

we find that $\mathbf{grad}_\Gamma([\dot{p}]_{\Sigma_i})$ is zero, for all i. In other words, one has $[\dot{p}]_{\Sigma_i} = cst_i$, for $1 \leq i \leq I$, i.e., $\dot{p} \in P(\dot{\Omega})$.
Finally, we note that the uniqueness of $\dot{p}$ (up to a constant) follows from the fact that $\dot{\Omega}$ is connected. ■

Let us mention an elementary direct decomposition of $P(\dot{\Omega})$.

Proposition 3.3.3 *For $1 \leq j \leq I$, let $\dot{r}_j \in P(\dot{\Omega})$ be such that $[\dot{r}_j]_{\Sigma_i} = \delta_{ij}$, for $1 \leq i \leq I$. Then, $(\dot{r}_j)_{1\leq j\leq I}$ is a free family in $P(\dot{\Omega})$, and moreover,*

$$P(\dot{\Omega}) = H^1(\Omega) \oplus \mathrm{span}_{1\leq j\leq I}(\dot{r}_j).$$

Proof. If $\sum_j c_j \dot{r}_j = 0$ in $P(\dot{\Omega})$, then $0 = [\sum_j c_j \dot{r}_j]_{\Sigma_i} = c_i$ for all i. Hence, $(\dot{r}_j)_{1\leq j\leq I}$ is a free family. Along the same lines, $H^1(\Omega) \cap \mathrm{span}_{1\leq j\leq I}(\dot{r}_j) = \{0\}$. Finally, given $\dot{p} \in P(\dot{\Omega})$, note that $\dot{p} - \sum_j [\dot{p}]_{\Sigma_j} \dot{r}_j$ belongs to $H^1(\Omega)$. ■

Remark 3.3.4 *Obviously, the functions $(\dot{r}_j)_j$ exist. Given j, $\dot{r}_j$ can be built by considering a neighborhood Ω_Σ of Σ_j in Ω such that $\Omega_\Sigma \cap \dot{\Omega} = \Omega^+ \cup \Omega^-$ with domains Ω^- and Ω^+ chosen as in Definition 2.1.67, not intersecting with any other cut. Taking $\dot{r}_{j|\Omega^+} = 1$ and $\dot{r}_{j|\Omega^-} = 0$ and making a (continuous) continuation to $\Omega \setminus \overline{\Omega_\Sigma}$, one obtains the requested $\dot{r}_j$.*

To handle scalar fields of $H^1(\dot{\Omega})$, we state a (useful) integration-by-parts formula. See [10] for the proof. In the spirit of Proposition 2.1.60, observe that given $\boldsymbol{v} \in \boldsymbol{H}_0(\mathrm{div}\,\Omega)$, its trace $\boldsymbol{v} \cdot \boldsymbol{n}_{|\Sigma_i}$ belongs to $H^{-1/2}(\Sigma_i)$ for all i.

Proposition 3.3.5 *Let Ω be a domain such that* **(Top)**$_{I>0}$ *is fulfilled. Let $\dot{q} \in H^1(\dot{\Omega})$ and $\boldsymbol{v} \in \boldsymbol{H}_0(\mathrm{div}\,\Omega)$:*

$$(\boldsymbol{v}, \mathbf{grad}\,\dot{q})_{\boldsymbol{L}^2(\dot{\Omega})} + (\mathrm{div}\,\boldsymbol{v}, \dot{q})_{L^2(\dot{\Omega})} = \sum_{1\leq i\leq I} \langle \boldsymbol{v} \cdot \boldsymbol{n}, [\dot{q}]_{\Sigma_i} \rangle_{\Sigma_i}. \tag{3.6}$$

Above, the duality brackets over Σ_i are understood in $\langle \cdot, \cdot \rangle_{H^{1/2}(\Sigma_i)}$.

Interestingly, the addition of a homogeneous boundary condition allows one to recover potentials that automatically belong to $H^1(\Omega)$, instead of $P(\dot{\Omega})$. Before showing this important property, we begin with elementary results regarding solutions to the Poisson equation with vanishing or piecewise constant trace.

Proposition 3.3.6 *Let Ω be a domain. Then, given $\boldsymbol{v} \in \boldsymbol{L}^2(\Omega)$, the variational formulation*

$$\begin{cases} \text{Find } q \in H^1_0(\Omega) \text{ such that} \\ \forall q' \in H^1_0(\Omega),\ (\mathbf{grad}\,q | \,\mathbf{grad}\,q') = (\boldsymbol{v} | \,\mathbf{grad}\,q') \end{cases}. \tag{3.7}$$

is well-posed. Furthermore, its solution $q \in H^1(\Omega)$ is characterized by $\Delta q = \mathrm{div}\,\boldsymbol{v}$ in Ω and $q_{|\Gamma} = 0$.

Proof. One checks that the variational formulation (3.7) is well-posed with the help of the Lax-Milgram Theorem 4.2.8, and the Poincaré inequality of Theorem 2.1.35 in $H^1_0(\Omega)$. Note that, with the help of the Cauchy-Schwarz inequality, choosing $q' = q$ yields the bound $\|\mathbf{grad}\, q\|_{\boldsymbol{L}^2(\Omega)} \leq \|\boldsymbol{v}\|_{\boldsymbol{L}^2(\Omega)}$.
Now, assume that q solves (3.7) and take $q' \in \mathcal{D}(\Omega)$. Using differentiation in the sense of distributions yields

$$\begin{aligned}\langle \Delta q, q'\rangle &= -\langle \mathbf{grad}\, q, \mathbf{grad}\, q'\rangle = -(\mathbf{grad}\, q|\, \mathbf{grad}\, \overline{q'}) = -(\boldsymbol{v}|\, \mathbf{grad}\, \overline{q'})\\ &= -\langle \boldsymbol{v}, \mathbf{grad}\, q'\rangle = \langle \operatorname{div} \boldsymbol{v}, q'\rangle.\end{aligned}$$

Hence, $\Delta q = \operatorname{div} \boldsymbol{v}$ in $\mathcal{D}'(\Omega)$ and, obviously, $q \in H^1(\Omega)$ with $q_{|\Gamma} = 0$.
Conversely, $q \in H^1_0(\Omega)$. Moreover, by definition, given $q' \in H^1_0(\Omega)$, there exists $(q'_m)_m \in \mathcal{D}(\Omega)^{\mathbb{N}}$ such that $\lim_{m\to\infty} \|q' - q'_m\|_{H^1(\Omega)} = 0$. It follows that

$$\begin{aligned}(\mathbf{grad}\, q|\, \mathbf{grad}\, q') &= \lim_{m\to\infty} (\mathbf{grad}\, q|\, \mathbf{grad}\, q'_m) = \lim_{m\to\infty} \langle \mathbf{grad}\, q, \mathbf{grad}\, \overline{q'_m}\rangle\\ &= -\lim_{m\to\infty} \langle \Delta q, \overline{q'_m}\rangle = -\lim_{m\to\infty} \langle \operatorname{div} \boldsymbol{v}, \overline{q'_m}\rangle\\ &= \lim_{m\to\infty} \langle \boldsymbol{v}, \mathbf{grad}\, \overline{q'_m}\rangle = \lim_{m\to\infty} (\boldsymbol{v}|\, \mathbf{grad}\, q'_m) = (\boldsymbol{v}|\, \mathbf{grad}\, q').\end{aligned}$$

In other words, q solves the variational formulation (3.7). ■

Proposition 3.3.7 *Let Ω be a domain. For all $1 \leq \ell \leq K$, there exists one, and only one, $q_\ell \in H^1(\Omega)$ such that $\Delta q_\ell = 0$ in Ω and $q_{\ell|\Gamma_m} = \delta_{\ell m}$ for $0 \leq m \leq K$.*

Proof. Since γ_0 is surjective from $H^1(\Omega)$ to $H^{1/2}(\Gamma)$, it has a continuous right-inverse, so one can consider a preimage Q_ℓ of the function equal to 1 on Γ_ℓ, and 0 on $\Gamma \setminus \Gamma_\ell$, and set $\boldsymbol{v}_\ell = \mathbf{grad}\, Q_\ell \in \boldsymbol{L}^2(\Omega)$. According to Proposition 3.3.6, there exists one, and only one, q^0_ℓ that solves the variational formulation (3.7) with data $\boldsymbol{v}_\ell$. Then, $q_\ell = Q_\ell - q^0_\ell \in H^1(\Omega)$ is such that $\Delta q_\ell = \operatorname{div} \boldsymbol{v}_\ell - \Delta q^0_\ell = 0$ in Ω, with $q_{\ell|\Gamma_m} = Q_{\ell|\Gamma_m} = \delta_{\ell m}$, for $0 \leq m \leq K$.
This proves existence. Uniqueness is obtained as follows: let $q^{(1)}_\ell$, $q^{(2)}_\ell$ be two fields that fulfill the required conditions, and set $\delta q_\ell = q^{(1)}_\ell - q^{(2)}_\ell$. By construction, $\delta q_\ell \in H^1_0(\Omega)$ solves the variational formulation (3.7) with zero data, so it is itself equal to zero and $q^{(1)}_\ell = q^{(2)}_\ell$. ■

For later use, we introduce the finite-dimensional vector space and a related $K \times K$ matrix, the so-called *capacitance matrix*

$$Q_N(\Omega) := \operatorname{span}_{1\leq\ell\leq K}(q_\ell), \quad \mathbb{C}_{\ell m} := (\mathbf{grad}\, q_m|\, \mathbf{grad}\, q_\ell),\ 1 \leq \ell, m \leq K.$$

On $Q_N(\Omega)$, all norms are equivalent and, according to the Poincaré inequality of Proposition 2.1.66, one may use $\|\,\mathbf{grad}\,\cdot\|_{\boldsymbol{L}^2(\Omega)}$, since all elements of $Q_N(\Omega)$ vanish on Γ_0.

Corollary 3.3.8 *Let Ω be a domain. The family $(q_\ell)_{1\leq\ell\leq K}$ is free, so the dimension of the vector space $Q_N(\Omega)$ is equal to K. In addition, the matrix*

$\mathbb{C}$ *is real-valued, symmetric positive-definite. Finally, given* $\boldsymbol{\alpha} = (\alpha_m)_{1\le m\le K}$, *the vector field defined by* $\boldsymbol{v}_{\boldsymbol{\alpha}} = \sum_{1\le m\le K} \alpha_m \,\mathbf{grad}\, q_m$ *is such that*

$$\langle \boldsymbol{v}_{\boldsymbol{\alpha}} \cdot \boldsymbol{n}, 1\rangle_{H^{1/2}(\Gamma_\ell)} = \sum_{1\le m\le K} \mathbb{C}_{\ell m}\alpha_m, \text{ for } 1 \le \ell \le K.$$

Proof. First, $(q_\ell)_{1\le\ell\le K}$ is a free family: indeed, $\sum_{1\le\ell\le K} c_\ell q_\ell = 0$ in Ω implies $0 = (\sum_{1\le\ell\le K} c_\ell q_\ell)_{|\Gamma_m} = c_m$ for $1 \le m \le K$.
Next, the functions $(q_\ell)_{1\le\ell\le K}$ are all real-valued. Indeed, given ℓ, one has $\overline{q_\ell} \in H^1(\Omega)$, $\Delta\overline{q_\ell} = 0$ in Ω, $\overline{q_\ell} = \delta_{\ell m}$ on Γ_m, $\forall m$, so $\overline{q_\ell} = q_\ell$ by uniqueness. So are their gradients $(\mathbf{grad}\, q_\ell)_{1\le\ell\le K}$, and likewise for the matrix $\mathbb{C}$.
The matrix $\mathbb{C}$ is Hermitian, hence symmetric, by definition.
Let $\boldsymbol{\alpha} = (\alpha_\ell)_{1\le\ell\le K}$, then

$$\begin{aligned}(\mathbb{C}\boldsymbol{\alpha}|\boldsymbol{\alpha}) &= \sum_{\ell,m} \mathbb{C}_{\ell m}\alpha_m\overline{\alpha_\ell} = (\mathbf{grad}(\sum_m \alpha_m q_m)|\,\mathbf{grad}(\sum_\ell \alpha_\ell q_\ell)) \\ &= \|\,\mathbf{grad}\, q\|^2_{\boldsymbol{L}^2(\Omega)} \ge 0, \text{ where } q = \sum_\ell \alpha_\ell q_\ell.\end{aligned}$$

But $q \in Q_N(\Omega)$, so $(\mathbb{C}\boldsymbol{\alpha}|\boldsymbol{\alpha}) = 0$ if, and only if, $q = 0$, that is, $\boldsymbol{\alpha} = 0$. The matrix $\mathbb{C}$ is positive-definite.
For $1 \le \ell \le K$, the last result is obtained by integrating by parts (cf. (2.25):

$$\begin{aligned}\langle \boldsymbol{v}_{\boldsymbol{\alpha}} \cdot \boldsymbol{n}, 1\rangle_{H^{1/2}(\Gamma_\ell)} &= \langle \boldsymbol{v}_{\boldsymbol{\alpha}} \cdot \boldsymbol{n}, q_\ell\rangle_{H^{1/2}(\Gamma)} \\ &= \sum_{1\le m\le K} \alpha_m \langle \mathbf{grad}\, q_m \cdot \boldsymbol{n}, q_\ell\rangle_{H^{1/2}(\Gamma)} \\ &= \sum_{1\le m\le K} \alpha_m (\mathbf{grad}\, q_m|\,\mathbf{grad}\, q_\ell) = \sum_{1\le m\le K} \mathbb{C}_{\ell m}\alpha_m,\end{aligned}$$

which concludes the proof. ■

We are now in a position to prove our claim.

Theorem 3.3.9 *Let* Ω *be a domain. Then, given* $\boldsymbol{v} \in \boldsymbol{L}^2(\Omega)$, *it holds that*

$$\left.\begin{array}{l}\mathbf{curl}\,\boldsymbol{v} = 0 \text{ in } \Omega, \\ \boldsymbol{v} \times \boldsymbol{n}_{|\Gamma} = 0\end{array}\right\} \iff \exists p \in H^1_{\partial\Omega}(\Omega),\ \boldsymbol{v} = \mathbf{grad}\, p.$$

Moreover, the scalar potential p *is unique, and* $|p|_{H^1(\Omega)} = \|\boldsymbol{v}\|_{\boldsymbol{L}^2(\Omega)}$.

Proof. The result is obtained in three steps:
1. According to Proposition 3.3.6, there exists one, and only one, $q \in H^1_0(\Omega)$ such that $\Delta q = \operatorname{div}\boldsymbol{v}$ in Ω: the field $\boldsymbol{v}' = \boldsymbol{v} - \mathbf{grad}\, q$ of $\boldsymbol{L}^2(\Omega)$ is such that $\mathbf{curl}\,\boldsymbol{v}' = 0$ and $\operatorname{div}\boldsymbol{v}' = 0$ in Ω, and $\boldsymbol{v}' \times \boldsymbol{n}_{|\Gamma} = 0$ (the last property is a consequence of Proposition 2.2.10).
2. Define the column vector $\boldsymbol{\beta}$ with entries $\beta_\ell = \langle \boldsymbol{v}' \cdot \boldsymbol{n}, 1\rangle_{H^{1/2}(\Gamma_\ell)}$, $1 \le \ell \le K$. Then, let $\boldsymbol{v}'' = \boldsymbol{v}' - \sum_{1\le m\le K} \alpha_m \,\mathbf{grad}\, q_m$, where $\boldsymbol{\alpha} = (\alpha_m)_m$ solves the

linear system $\mathbb{C}\boldsymbol{\alpha} = \boldsymbol{\beta}$. The field $\boldsymbol{v}''$ of $\boldsymbol{L}^2(\Omega)$ is such that $\mathbf{curl}\,\boldsymbol{v}'' = 0$ and $\operatorname{div}\boldsymbol{v}'' = 0$ in Ω, and $\boldsymbol{v}'' \times \boldsymbol{n}_{|\Gamma} = 0$ (again, the last property is a consequence of Proposition 2.2.10, applied either to $q_m - 1$ in a neighborhood of Γ_m, or to q_m elsewhere). Due to Corollary 3.3.8, one finds $\langle \boldsymbol{v}'' \cdot \boldsymbol{n}, 1\rangle_{H^{1/2}(\Gamma_\ell)} = 0$ for $1 \le \ell \le K$.
3. Thanks to Theorem 3.4.1 below, there exists $\boldsymbol{w} \in \boldsymbol{H}^1(\Omega)$ such that $\boldsymbol{v}'' = \mathbf{curl}\,\boldsymbol{w}$ in Ω. Hence, integrating by parts (2.20) one last time, one finds

$$\|\boldsymbol{v}''\|^2_{\boldsymbol{L}^2(\Omega)} = (\boldsymbol{v}''|\,\mathbf{curl}\,\boldsymbol{w}) = 0.$$

So, $\boldsymbol{v}'' = 0$, that is, $\boldsymbol{v} = \mathbf{grad}\,p$ with $p := q + \sum_{1\le m\le K} \alpha_m q_m \in H^1(\Omega)$ and $p_{|\Gamma_k} = \alpha_k$, $\forall k$.
The proof of the converse assertion is obvious. ■

Above, we exhibited vector fields that are curl- and divergence-free, with vanishing tangential trace: $\mathbf{grad}\,q$, for $q \in Q_N(\Omega)$.
Let us check now that $\operatorname{span}_{1\le k\le K}(\mathbf{grad}\,q_k)$ is exactly the set of curl- and divergence-free $\boldsymbol{L}^2(\Omega)$ vector fields, with vanishing tangential trace. Introduce

$$\boldsymbol{Z}_N(\Omega) := \boldsymbol{H}_0(\mathbf{curl}\,0, \Omega) \cap \boldsymbol{H}(\operatorname{div} 0, \Omega).$$

Proposition 3.3.10 *Let Ω be a domain. One has $\boldsymbol{Z}_N(\Omega) = \mathbf{grad}[Q_N(\Omega)]$. As a consequence, an element $\boldsymbol{v}$ of $\boldsymbol{Z}_N(\Omega)$ is characterized by the fluxes $(\langle \boldsymbol{v} \cdot \boldsymbol{n}, 1\rangle_{H^{1/2}(\Gamma_\ell)})_{1\le\ell\le K}$.*

Proof. One has $\mathbf{grad}\,q \subset \boldsymbol{Z}_N(\Omega)$ for all $q \in Q_N(\Omega)$.
Let $\boldsymbol{v} \in \boldsymbol{Z}_N(\Omega)$: according to Theorem 3.3.9, there exists $p \in H^1_{\partial\Omega}(\Omega)$ such that $\boldsymbol{v} = \mathbf{grad}\,p$ in Ω. If we let $q = p - \sum_{1\le m\le K}(p_{|\Gamma_m})q_m$, it holds that $q \in H^1_0(\Omega)$ and $\Delta q = 0$ in Ω. From Proposition 3.3.6, we find that $q = 0$, hence $\boldsymbol{v} \in \mathbf{grad}[Q_N(\Omega)]$.
The last result is a straightforward consequence of Corollary 3.3.8. ■

In the same spirit, one can look for $\boldsymbol{L}^2(\Omega)$ vector fields which are curl- and divergence-free, with vanishing normal trace:

$$\boldsymbol{Z}_T(\Omega) := \boldsymbol{H}(\mathbf{curl}\,0, \Omega) \cap \boldsymbol{H}_0(\operatorname{div} 0, \Omega).$$

Consider first the case of a topologically trivial domain.

Proposition 3.3.11 *Let Ω be a topologically trivial domain: $\boldsymbol{Z}_T(\Omega) = \{0\}$.*

Proof. Let $\boldsymbol{v} \in \boldsymbol{Z}_T(\Omega)$. From Theorem 3.3.1, there exists $p \in H^1(\Omega)$ such that $\boldsymbol{v} = \mathbf{grad}\,p$ in Ω. In addition, $\boldsymbol{v} \in \boldsymbol{H}_0(\operatorname{div}, \Omega)$ with $\operatorname{div}\boldsymbol{v} = 0$ in Ω, so the integration-by-parts formula (2.25) yields $\|\boldsymbol{v}\|^2_{\boldsymbol{L}^2(\Omega)} = (\boldsymbol{v}|\,\mathbf{grad}\,p) = 0$, which concludes the proof. ■

On the other hand, if the domain is topologically non-trivial, it turns out that the relevant space of scalar potentials is, in this case, $P(\dot{\Omega})$. As a matter of

fact, the fields are curl-free, but not with a vanishing tangential trace, so the extraction of potentials stems from Theorem 3.3.2. More precisely, introduce

$$P_{zmv}(\dot{\Omega}) := \{\dot{q} \in P(\dot{\Omega}) \,:\, \int_{\dot{\Omega}} \dot{q}\, d\boldsymbol{x} = 0\}\,;\ \text{one has } P(\dot{\Omega}) = P_{zmv}(\dot{\Omega}) \oplus \mathbb{C}.$$

Proposition 3.3.12 *Let Ω be a domain such that* $\mathbf{(Top)}_{I>0}$ *is fulfilled. Given $1 \leq j \leq I$, let $\dot{p}_j$ be defined as the unique solution to*

$$\begin{cases} \text{Find } \dot{p}_j \in P_{zmv}(\dot{\Omega}) \text{ such that} \\ \forall \dot{q} \in P_{zmv}(\dot{\Omega}), \quad (\mathbf{grad}\, \dot{p}_j, \mathbf{grad}\, \dot{q})_{\boldsymbol{L}^2(\dot{\Omega})} = [\overline{\dot{q}}]_{\Sigma_j} \end{cases}. \tag{3.8}$$

Then, $\boldsymbol{v}_j = \widetilde{\mathbf{grad}\, \dot{p}_j} \in \boldsymbol{L}^2(\Omega)$ is such that

$$\mathbf{curl}\, \boldsymbol{v}_j = 0,\ \operatorname{div} \boldsymbol{v}_j = 0 \ \textit{in } \Omega,\ \boldsymbol{v}_j \cdot \boldsymbol{n} = 0 \ \textit{on } \Gamma,\ \textit{and } \langle \boldsymbol{v}_j \cdot \boldsymbol{n}, 1\rangle_{\Sigma_i} = \delta_{ij},\ \forall i.$$

Proof. There exists one, and only one, solution to the variational formulation (3.8)([5]). Furthermore, we remark that it holds that $(\mathbf{grad}\, \dot{p}_j, \mathbf{grad}\, cst)_{\boldsymbol{L}^2(\dot{\Omega})} = 0 = [\overline{cst}]_{\Sigma_j}$ for constant fields in $\dot{\Omega}$. Hence, $\dot{p}_j$ solves the variational formulation for all $\dot{q} \in P(\dot{\Omega})$.
Let $\boldsymbol{v}_j = \widetilde{\mathbf{grad}\, \dot{p}_j} \in \boldsymbol{L}^2(\Omega)$. Due to Theorem 3.3.2, one knows that $\mathbf{curl}\, \boldsymbol{v}_j = 0$ in Ω. Then, given $g \in \mathcal{D}(\Omega)$,

$$\langle \operatorname{div} \boldsymbol{v}_j, \overline{g}\rangle = -(\boldsymbol{v}_j | \mathbf{grad}\, g) = -(\boldsymbol{v}_j, \mathbf{grad}\, g)_{\boldsymbol{L}^2(\dot{\Omega})} \overset{(3.8)}{=} 0.$$

It follows that $\operatorname{div} \boldsymbol{v}_j = 0$ in Ω, and $\boldsymbol{v}_j \in \boldsymbol{H}(\operatorname{div}, \Omega)$. Next, given $g \in H^1(\Omega)$, one finds by integration by parts (cf. (2.25))

$$\langle \boldsymbol{v}_j \cdot \boldsymbol{n}, g\rangle_{H^{1/2}(\Gamma)} = (\operatorname{div} \boldsymbol{v}_j | g) + (\boldsymbol{v}_j | \mathbf{grad}\, g) \overset{(3.8)}{=} 0.$$

By the surjectivity of the trace mapping, we obtain that $\boldsymbol{v}_j \cdot \boldsymbol{n}_{|\Gamma} = 0$ in $H^{-1/2}(\Gamma)$. In particular, $\boldsymbol{v}_j \in \boldsymbol{H}_0(\operatorname{div}, \Omega)$, and one can use the integration-by-parts formula (3.6) with $\boldsymbol{v}_j$ and $\dot{r}_i$ for $1 \leq i \leq I$, where $(\dot{r}_i)_i$ is defined as in Proposition 3.3.3. This leads to

$$\langle \boldsymbol{v}_j \cdot \boldsymbol{n}, 1\rangle_{\Sigma_i} = (\operatorname{div} \boldsymbol{v}_j, \dot{r}_i)_{L^2(\dot{\Omega})} + (\boldsymbol{v}_j, \mathbf{grad}\, \dot{r}_i)_{\boldsymbol{L}^2(\dot{\Omega})} \overset{(3.8)}{=} \delta_{ij}.$$

■

Let us introduce the space of scalar potentials

$$Q_T(\dot{\Omega}) := \operatorname{span}_{1 \leq j \leq I}(\dot{p}_j).$$

[5] According to the Lax-Milgram Theorem 4.2.8 and to the Poincaré-Wirtinger inequality of Theorem 2.1.37 in $P_{zmv}(\dot{\Omega})$, the variational formulation (3.8) is well-posed.

Proposition 3.3.13 *Let Ω be a domain such that* $\mathbf{(Top)}_{I>0}$ *is fulfilled. Then, the dimension of the vector space $\boldsymbol{Z}_T(\Omega)$ is equal to I. Furthermore, a basis for $\boldsymbol{Z}_T(\Omega)$ is the set of functions $(\widetilde{\mathbf{grad}\,\dot{q}_j})_{1\le j\le I}$, where each $\dot{q}_j \in Q_T(\dot{\Omega})$ is such that $[\dot{q}_j]_{\Sigma_i} = \delta_{ij}$, for $1 \le i \le I$.*

Proof. For $1 \le j \le I$, let $\boldsymbol{v}_j = \widetilde{\mathbf{grad}\,\dot{p}_j} \in \boldsymbol{H}_0(\mathrm{div}, \Omega)$. According to Proposition 3.3.12, it holds that $\mathrm{span}_j(\boldsymbol{v}_j) \subset \boldsymbol{Z}_T(\Omega)$. Moreover, $(\boldsymbol{v}_j)_j$ is a free family: indeed, $\sum_j c_j \boldsymbol{v}_j = 0$ in Ω implies $0 = \langle \sum_j c_j \boldsymbol{v}_j \cdot \boldsymbol{n}, 1\rangle_{\Sigma_i} = c_i$ for all i.
Let $\boldsymbol{v} \in \boldsymbol{Z}_T(\Omega)$: thanks to Theorem 3.3.2, there exists $\dot{p} \in P(\dot{\Omega})$ such that $\boldsymbol{v} = \widetilde{\mathbf{grad}\,\dot{p}}$ in Ω. If we let $\dot{q} = \dot{p} - \sum_j \langle \boldsymbol{v}\cdot\boldsymbol{n}, 1\rangle_{\Sigma_i} \dot{p}_j$, it holds that $\dot{q} \in P(\dot{\Omega})$, with $\widetilde{\mathbf{grad}\,\dot{q}} \in \boldsymbol{H}_0(\mathrm{div}, \Omega)$, and $\langle \mathbf{grad}\,\dot{q}\cdot\boldsymbol{n}, 1\rangle_{\Sigma_i} = 0$ for all i. In particular, one can use the integration-by-parts formula (3.6) with $\widetilde{\mathbf{grad}\,\dot{q}}$ and $\dot{q}$ to find

$$\begin{aligned}\|\widetilde{\mathbf{grad}\,\dot{q}}\|^2_{\boldsymbol{L}^2(\Omega)} &= (\mathbf{grad}\,\dot{q}, \mathbf{grad}\,\dot{q})_{\boldsymbol{L}^2(\dot{\Omega})} = \sum_i \langle \mathbf{grad}\,\dot{q}\cdot\boldsymbol{n}, [\dot{q}]_{\Sigma_i}\rangle_{\Sigma_i} \\ &= \sum_i [\overline{\dot{q}}]_{\Sigma_i} \langle \mathbf{grad}\,\dot{q}\cdot\boldsymbol{n}, 1\rangle_{\Sigma_i} = 0.\end{aligned}$$

So, we conclude that $\boldsymbol{v} = \sum_j \langle \boldsymbol{v}\cdot\boldsymbol{n}, 1\rangle_{\Sigma_i} \boldsymbol{v}_j$ belongs to $\mathrm{span}_j(\boldsymbol{v}_j)$.
Finally, we prove that we can build an alternate basis for $Q_T(\dot{\Omega})$, namely $(\dot{q}_j)_j$ such that $[\dot{q}_j]_{\Sigma_i} = \delta_{ij}$, for all i, j. For that, we introduce the mapping

$$Jump \;:\; \begin{cases} Q_T(\dot{\Omega}) \to \mathbb{C}^I \\ \dot{q} \mapsto ([\dot{q}]_{\Sigma_i})_{1\le i\le I} \end{cases}$$

and prove it is a bijection, by checking that its kernel is reduced to $\{0\}$. If we let $\dot{q} \in \ker(Jump)$, we compute that $\|\widetilde{\mathbf{grad}\,\dot{q}}\|^2_{\boldsymbol{L}^2(\Omega)} = 0$ (cf. the above integration by parts), so $\dot{q} = 0$ and the characterization by jumps is shown. ■

For later use, we introduce the so-called *inductance matrix*

$$\mathbb{L}_{ij} := (\mathbf{grad}\,\dot{q}_j, \mathbf{grad}\,\dot{q}_i)_{\boldsymbol{L}^2(\dot{\Omega})},\ 1 \le i, j \le I.$$

Corollary 3.3.14 *The matrix $\mathbb{L}$ is real-valued, symmetric positive-definite.*

Proof. The functions $(\dot{p}_j)_{1\le j\le I}$ are all real-valued: given j, $\overline{\dot{p}_j} \in P_{zmv}(\dot{\Omega})$ solves the variational formulation (3.8), so $\overline{\dot{p}_j} = \dot{p}_j$ by uniqueness. Then, given i, writing $\dot{q}_i$ as the linear combination $\dot{q}_i = \sum_j c_j \dot{p}_j$ with complex coefficients $(c_j)_j$ and using the characterization of $\dot{q}_i$ via its jumps, one obtains

$$\forall i',\ \sum_j c_j [\dot{p}_j]_{\Sigma_{i'}} = \delta_{ii'}.$$

This is an invertible linear system in the coefficients $(c_j)_j$, with real-valued matrix $([\dot{p}_j]_{\Sigma_{i'}})_{ji'}$ and real-valued right-hand side. Therefore, the coefficients

are real, and as consequence, $\dot{q}_i$ is a real-valued function.
So are their gradients $(\widetilde{\mathbf{grad}\,\dot{q}_i})_{1\le i\le I}$, and likewise for the matrix $\mathbb{L}$.
The matrix $\mathbb{L}$ is symmetric by definition.
Let $\boldsymbol{\alpha} = (\alpha_i)_{1\le i\le I}$, then

$$(\mathbb{L}\boldsymbol{\alpha}|\boldsymbol{\alpha}) = \|\,\mathbf{grad}\,\dot{q}\|^2_{\boldsymbol{L}^2(\dot{\Omega})} \ge 0, \text{ where } \dot{q} = \sum_i \alpha_i \dot{q}_i.$$

According to Proposition 3.3.13, $(\widetilde{\mathbf{grad}\,\dot{q}_i})_{1\le i\le I}$ is a free family, so $(\mathbb{L}\boldsymbol{\alpha}|\boldsymbol{\alpha}) = 0$ if, and only if, $\boldsymbol{\alpha} = 0$. The matrix $\mathbb{L}$ is positive-definite. ■

Let us conclude this section with a study of the regularity of curl-free and divergence-free vector fields with a vanishing trace.

Theorem 3.3.15 *Let Ω be a domain, then $\boldsymbol{Z}_N(\Omega) \subset \boldsymbol{H}^{1/2}(\Omega)$.*
Assume, moreover, that $\mathbf{(Top)}_{I>0}$ *is fulfilled in Ω, then $\boldsymbol{Z}_T(\Omega) \subset \boldsymbol{H}^{1/2}(\Omega)$.*

Proof. Let $\boldsymbol{v} \in \boldsymbol{Z}_N(\Omega)$: according to Proposition 3.3.10, there exists $p \in Q_N(\Omega)$ such that $\boldsymbol{v} = \mathbf{grad}\,p$. By construction, $\Delta p = 0$ in Ω, and moreover, $p_{|\Gamma} \in H^1(\Gamma)$. Thanks to [144], one has $p \in H^{3/2}(\Omega)$, hence $\boldsymbol{v} = \mathbf{grad}\,p \in \boldsymbol{H}^{1/2}(\Omega)$. This proves the first part of the claim.
Let $\boldsymbol{v} \in \boldsymbol{Z}_T(\Omega)$: we know from Proposition 3.3.13 that there exists $\dot{p} \in Q_T(\dot{\Omega})$ such that $\boldsymbol{v} = \widetilde{\mathbf{grad}\,\dot{p}}$. However, $\widetilde{\dot{p}} \notin H^1(\Omega)$ (use Propositions 3.3.3 and 3.3.11), except if $\boldsymbol{v} = 0$.
One may address this difficulty by using a partition of unity. Let $(\chi_i)_{1\le i\le I}$ be such that for all i: $\chi_i \in C^\infty(\overline{\Omega}, [0,1])$ with connected support, $\chi_i = 1$ in a neighborhood of Σ_i, and $\mathrm{supp}(\chi_{i'}) \cap \Sigma_i = \emptyset$ for $i' \ne i$. One may further define connected, open subsets $(\mathcal{O}_i)_{1\le i\le I}$ of Ω with Lipschitz boundary such that $\mathrm{supp}(\chi_i) \cap \Omega \subset \mathcal{O}_i$ and $\mathcal{O}_{i'} \cap \Sigma_i = \emptyset$, for $i \ne i'$. Each subset is split into two parts, $\mathcal{O}_i^-$ and $\mathcal{O}_i^+$, according to the orientation of the normal vector to Σ_i, so that $[z]_{\Sigma_i} = z_{|\partial\mathcal{O}_i^+} - z_{|\partial\mathcal{O}_i^-}$. By defining $\chi_0 = 1 - \sum_{1\le i\le I}\chi_i$, one gets a partition of unity $(\chi_\iota)_{0\le\iota\le I}$ on $\overline{\Omega}$.
Next, let $\dot{p}_\iota = \chi_\iota \dot{p}$ for all ι: by construction, $\widetilde{\dot{p}_0} \in H^1(\Omega)$, whereas $\dot{p}_i \in P(\dot{\Omega})$ for $1 \le i \le I$. Introduce, for $1 \le i \le I$, $p_i \in L^2(\mathcal{O}_i)$ defined as $p_i = \dot{p}_i$ in $\mathcal{O}_i^-$ and $p_i = \dot{p}_i - [\dot{p}_i]_{\Sigma_i}$ in $\mathcal{O}_i^+$. As $[p_i]_{\Sigma_i} = 0$, it holds that $p_i \in H^1(\mathcal{O}_i)$, and in addition, $\Delta p_i \in L^2(\mathcal{O}_i)$ and $\partial_n p_{i|\partial\mathcal{O}_i} \in L^2(\partial\mathcal{O}_i)$. So, we obtain that $p_i \in H^{3/2}(\mathcal{O}_i)$, cf. [144, 88], which implies $\widetilde{\mathbf{grad}\,\dot{p}_i} = \widetilde{\mathbf{grad}\,p_i} \in \boldsymbol{H}^{1/2}(\mathcal{O}_i)$. It follows that $\widetilde{\mathbf{grad}\,\dot{p}_i}$ belongs to $\boldsymbol{H}^{1/2}(\Omega)$, because $\widetilde{\mathbf{grad}\,\dot{p}_i}$ vanishes in a neighborhood of $\partial\mathcal{O}_i \cap \Omega$ (and $\widetilde{\mathbf{grad}\,\dot{p}_i} = 0$ in $\Omega \setminus \overline{\mathcal{O}_i}$). Likewise, $\widetilde{\mathbf{grad}\,\dot{p}_0} = \mathbf{grad}\,\widetilde{\dot{p}_0}$ belongs to $\boldsymbol{H}^{1/2}(\Omega)$. Using the definition of the partition of unity, one concludes that $\boldsymbol{v} = \widetilde{\mathbf{grad}\,\dot{p}} \in \boldsymbol{H}^{1/2}(\Omega)$. This proves the second part of the claim.
■

3.4 Extraction of vector potentials

We consider now the case of divergence-free fields of $\boldsymbol{L}^2(\Omega)$, for which one can prove the fundamental result below.

Theorem 3.4.1 *Let Ω be a domain. Then, given $\boldsymbol{v} \in \boldsymbol{L}^2(\Omega)$, it holds that*

$$\left.\begin{array}{l} \operatorname{div} \boldsymbol{v} = 0 \text{ in } \Omega, \\ \langle \boldsymbol{v}\cdot\boldsymbol{n}, 1\rangle_{H^{1/2}(\Gamma_k)} = 0, \ \forall k \end{array}\right\} \iff \left\{\begin{array}{l} \exists \boldsymbol{w} \in \boldsymbol{H}^1_{zmv}(\Omega), \\ \operatorname{div} \boldsymbol{w} = 0, \end{array}\right. \boldsymbol{v} = \mathbf{curl}\, \boldsymbol{w}. \tag{3.9}$$

Furthermore, there exists $C > 0$ such that for all $\boldsymbol{v}$, one may choose a vector potential $\boldsymbol{w}$ that fulfills

$$\|\boldsymbol{w}\|_{\boldsymbol{H}^1(\Omega)} \le C\, \|\boldsymbol{v}\|_{\boldsymbol{L}^2(\Omega)}.$$

Remark 3.4.2 *Assuming that $\boldsymbol{v}$ writes $\boldsymbol{v} = \mathbf{curl}\, \boldsymbol{w}$ with $\boldsymbol{w} \in \boldsymbol{H}(\mathbf{curl}, \Omega)$, let us briefly comment on the conditions $\langle \boldsymbol{v}\cdot\boldsymbol{n}, 1\rangle_{H^{1/2}(\Gamma_k)} = 0$, for $0 \le k \le K$. For $k > 0$, define $q_k \in H^1(\Omega)$ such that q_k is a basis function of $Q_N(\Omega)$. Then, one obtains by integrating by parts twice:*

$$\langle \boldsymbol{v}\cdot\boldsymbol{n}, 1\rangle_{H^{1/2}(\Gamma_k)} = \langle \boldsymbol{v}\cdot\boldsymbol{n}, q_k\rangle_{H^{1/2}(\Gamma)} = (\boldsymbol{v}|\, \mathbf{grad}\, q_k) = (\mathbf{curl}\, \boldsymbol{w}|\, \mathbf{grad}\, q_k) = 0,$$

because $\mathbf{grad}\, q_k \in \boldsymbol{H}_0(\mathbf{curl}, \Omega)$. On the other hand, for $k = 0$, one has simply

$$\langle \boldsymbol{v}\cdot\boldsymbol{n}, 1\rangle_{H^{1/2}(\Gamma_0)} = -\sum_{1\le k\le K} \langle \boldsymbol{v}\cdot\boldsymbol{n}, 1\rangle_{H^{1/2}(\Gamma_k)} = 0.$$

Proof. We use the notations of §3.2. The result is obtained in four steps:
1. Define[6] $(q_\ell)_{0\le\ell\le K}$ by:
- $q_0 \in H^1_{zmv}(\Omega_0)$ s.t. $\Delta q_0 = 0$ in Ω_0, $\partial_n q_0 = \boldsymbol{v}\cdot\boldsymbol{n}$ on Γ_0, $\partial_n q_0 = 0$ on $\partial\mathcal{O}$;
- $q_\ell \in H^1_{zmv}(\Omega_\ell)$ s.t. $\Delta q_\ell = 0$ in Ω_ℓ, $\partial_n q_\ell = \boldsymbol{v}\cdot\boldsymbol{n}$ on Γ_ℓ, for $\ell > 0$.
By construction, the function $\bar{\boldsymbol{v}} \in \boldsymbol{L}^2(\mathbb{R}^3)$ defined by

$$\bar{\boldsymbol{v}}_{|\Omega} = \boldsymbol{v}, \quad \bar{\boldsymbol{v}}_{|\Omega_\ell} = \mathbf{grad}\, q_\ell \text{ for } 0 \le \ell \le K, \quad \bar{\boldsymbol{v}}_{|\mathbb{R}^3\setminus\overline{\mathcal{O}}} = 0$$

[6] Given ℓ, the problem is equivalent to the variational formulation

$$\left\{\begin{array}{l} \textit{Find } q_\ell \in H^1_{zmv}(\Omega_\ell) \textit{ such that} \\ \forall q \in H^1_{zmv}(\Omega_\ell),\ (\mathbf{grad}\, q_\ell|\, \mathbf{grad}\, q) = \langle \boldsymbol{v}\cdot\boldsymbol{n}, q\rangle_{H^{1/2}(\Gamma_\ell)} \end{array}\right. .$$

This variational formulation is well-posed, cf. the Lax-Milgram Theorem 4.2.8 and the Poincaré-Wirtinger inequality of Theorem 2.1.37 in $H^1_{zmv}(\Omega_\ell)$. Due to the continuity of the trace mapping γ_0 (Theorem 2.1.62), choosing $q = q_\ell$ yields $\|\mathbf{grad}\, q_\ell\|_{\boldsymbol{L}^2(\Omega_\ell)} \le C_\ell\, \|\boldsymbol{v}\cdot\boldsymbol{n}\|_{H^{-1/2}(\Gamma_\ell)}$ with $C_\ell > 0$ independent of $\boldsymbol{v}$. Finally, using the continuity of the normal trace mapping (Theorem 2.2.18), one gets the bound

$$\|\mathbf{grad}\, q_\ell\|_{\boldsymbol{L}^2(\Omega_\ell)} \le C'_\ell\, \|\boldsymbol{v}\|_{\boldsymbol{H}(\operatorname{div},\Omega)},$$

with $C'_\ell > 0$ independent of $\boldsymbol{v}$.

belongs to $\boldsymbol{H}(\mathrm{div}, \mathbb{R}^3)$ (see Proposition 2.2.30), and it is divergence-free.
2. Let $\hat{\boldsymbol{v}}$ be the Fourier transform of $\bar{\boldsymbol{v}}$. Writing the equations (3.9) in $\mathbb{R}^3$ for $\bar{\boldsymbol{v}}$ with $\bar{\boldsymbol{w}}$ as the vector potential, and then performing the Fourier transform, one sees that the Fourier transform $\hat{\boldsymbol{w}}$ of $\bar{\boldsymbol{w}}$ is governed by

$$\hat{\boldsymbol{v}}(\boldsymbol{k}) = \imath \boldsymbol{k} \times \hat{\boldsymbol{w}}(\boldsymbol{k}),\ \imath \boldsymbol{k} \cdot \hat{\boldsymbol{w}}(\boldsymbol{k}) = 0,\ \forall \boldsymbol{k} \in \mathbb{R}^3.$$

Solving this linear system in $\hat{w}_p$, $p = 1, 2, 3$, yields the solution

$$\hat{w}_1 = \imath \frac{k_2 \hat{v}_3 - k_3 \hat{v}_2}{|\boldsymbol{k}|^2}, \quad \hat{w}_2 = \imath \frac{k_3 \hat{v}_1 - k_1 \hat{v}_3}{|\boldsymbol{k}|^2}, \quad \hat{w}_3 = \imath \frac{k_1 \hat{v}_2 - k_2 \hat{v}_1}{|\boldsymbol{k}|^2}.$$

In particular, applying the inverse Fourier transform to $\hat{\boldsymbol{w}}$ and denoting by $\boldsymbol{w}^-$ its restriction to Ω, it holds that $\boldsymbol{v} = \mathbf{curl}\, \boldsymbol{w}^-$ and $\mathrm{div}\, \boldsymbol{w}^- = 0$ in Ω.
3. Let us study the regularity of $\hat{\boldsymbol{w}}$ and $\boldsymbol{w}^-$. For that, introduce a cut-off function $\chi \in \mathcal{D}(\mathbb{R})$ equal to 1 in a neighborhood of 0, and split $\hat{\boldsymbol{w}}$ as

$$\hat{\boldsymbol{w}}(\boldsymbol{k}) = \chi(|\boldsymbol{k}|)\hat{\boldsymbol{w}}(\boldsymbol{k}) + (1 - \chi(|\boldsymbol{k}|))\hat{\boldsymbol{w}}(\boldsymbol{k}).$$

Note that $\boldsymbol{k} \mapsto \chi(|\boldsymbol{k}|)\hat{\boldsymbol{w}}(\boldsymbol{k})$ has a compact support, so its inverse Fourier transform is analytic (cf. [187, p. 272]), and in particular, its restriction to Ω belongs to $\boldsymbol{L}^2(\Omega)$. On the other hand, $\boldsymbol{k} \mapsto (1 - \chi(|\boldsymbol{k}|))\hat{\boldsymbol{w}}(\boldsymbol{k})$ vanishes in a neighborhood of 0. Thanks to its characterization elsewhere (as a function of $\hat{\boldsymbol{v}}$), it belongs to $\boldsymbol{L}^2(\mathbb{R}^3)$, and so does its inverse Fourier transform. Therefore, $\boldsymbol{w}^- \in \boldsymbol{L}^2(\Omega)$.
By direct computations, one now finds $|k_m \hat{w}_p| \leq \frac{3}{2} \max_p |\hat{v}_p|$, for $m, p = 1, 2, 3$. Hence, $k_m \hat{w}_p$ belongs to $L^2(\mathbb{R}^3)$ with $\|k_m \hat{w}_p\|_{L^2(\mathbb{R}^3)} \leq \frac{3}{2} \|\hat{\boldsymbol{v}}\|_{\boldsymbol{L}^2(\mathbb{R}^3)}$, and so $\partial_m w_p^-$ is in $L^2(\Omega)$, for $m, p = 1, 2, 3$. We conclude that $\boldsymbol{w}^- \in \boldsymbol{H}^1(\Omega)$.
4. Remark that one can add to $\boldsymbol{w}^-$ any constant field $\boldsymbol{cst} \in \mathbb{R}^3$, and still have $\boldsymbol{v} = \mathbf{curl}(\boldsymbol{w}^- + \boldsymbol{cst})$ and $\mathrm{div}(\boldsymbol{w}^- + \boldsymbol{cst}) = 0$ in Ω. Therefore, one can choose a vector potential – now called $\boldsymbol{w}$ – so that all the conditions (3.9) hold.
Let us now bound the $\boldsymbol{H}^1(\Omega)$ semi-norm of the vector potential. According to the previous bounds on $(k_m \hat{w}_p)_{m,p=1,2,3}$, we have that $|\boldsymbol{w}|_{\boldsymbol{H}^1(\Omega)} \leq C \|\hat{\boldsymbol{v}}\|_{\boldsymbol{L}^2(\mathbb{R}^3)}$ for some constant $C > 0$ independent of $\hat{\boldsymbol{v}}$. In addition, one has $\|\hat{\boldsymbol{v}}\|_{\boldsymbol{L}^2(\mathbb{R}^3)} = (2\pi)^{-3/2} \|\bar{\boldsymbol{v}}\|_{\boldsymbol{L}^2(\mathbb{R}^3)}$ and, by definition of $\bar{\boldsymbol{v}}$:
- $\|\bar{\boldsymbol{v}}\|_{\boldsymbol{L}^2(\Omega)} = \|\boldsymbol{v}\|_{\boldsymbol{L}^2(\Omega)}$;
- $\|\bar{\boldsymbol{v}}\|_{\boldsymbol{L}^2(\Omega_\ell)} = \|\, \mathbf{grad}\, q_\ell\|_{\boldsymbol{L}^2(\Omega_\ell)} \leq C'_\ell \|\boldsymbol{v}\|_{\boldsymbol{H}(\mathrm{div},\Omega)}$, $0 \leq \ell \leq K$;
- $\|\bar{\boldsymbol{v}}\|_{\boldsymbol{L}^2(\mathbb{R}^3 \setminus \overline{\mathcal{O}})} = 0$.
Recalling that $\mathrm{div}\, \boldsymbol{v} = 0$ in Ω, we obtain that $|\boldsymbol{w}|_{\boldsymbol{H}^1(\Omega)} \leq C' \|\boldsymbol{v}\|_{\boldsymbol{L}^2(\Omega)}$, for some constant $C' > 0$ independent of $\boldsymbol{v}$. Since we chose the potential vector $\boldsymbol{w}$ in $\boldsymbol{H}^1_{zmv}(\Omega)$, one can use the Poincaré-Wirtinger inequality one last time to conclude that it actually holds that

$$\|\boldsymbol{w}\|_{\boldsymbol{H}^1(\Omega)} \leq C'' \|\boldsymbol{v}\|_{\boldsymbol{L}^2(\Omega)},$$

for some constant $C'' > 0$ independent of $\boldsymbol{v}$, which concludes the proof. ■

With the result of Theorem 3.4.1, we are now in a position to exhibit some useful properties of the function space

$$\boldsymbol{X}_N(\Omega) := \boldsymbol{H}_0(\mathbf{curl}, \Omega) \cap \boldsymbol{H}(\mathrm{div}, \Omega).$$

The first one is an inequality that allows one to bound the $\boldsymbol{L}^2(\Omega)$-norm of elements of $\boldsymbol{X}_N(\Omega)$, similar to the Poincaré inequalities. The second one is the compact imbedding of $\boldsymbol{X}_N(\Omega)$ in $\boldsymbol{L}^2(\Omega)$. Both results were first discovered by Weber [206].

Theorem 3.4.3 `(First Weber inequality)` *Let Ω be a domain. There exists $C_W > 0$ such that*

$$\begin{aligned}&\forall \boldsymbol{y} \in \boldsymbol{X}_N(\Omega),\\ &\|\boldsymbol{y}\|_{\boldsymbol{L}^2(\Omega)} \le C_W\{\|\,\mathbf{curl}\,\boldsymbol{y}\|_{\boldsymbol{L}^2(\Omega)} + \|\,\mathrm{div}\,\boldsymbol{y}\|_{L^2(\Omega)} + \sum_{1\le k\le K} |\langle \boldsymbol{y}\cdot\boldsymbol{n}, 1\rangle_{H^{1/2}(\Gamma_k)}|\}.\end{aligned}$$

Proof. Let us proceed by contradiction: if the claim is not true, then

$$\begin{aligned}&\exists (\boldsymbol{y}_m)_m \in \boldsymbol{X}_N(\Omega)^{\mathbb{N}} \text{ such that } \forall m,\ \|\boldsymbol{y}_m\|_{\boldsymbol{L}^2(\Omega)} = 1,\\ &\|\,\mathbf{curl}\,\boldsymbol{y}_m\|_{\boldsymbol{L}^2(\Omega)} + \|\,\mathrm{div}\,\boldsymbol{y}_m\|_{L^2(\Omega)} + \textstyle\sum_{1\le k\le K} |\langle \boldsymbol{y}_m\cdot\boldsymbol{n}, 1\rangle_{H^{1/2}(\Gamma_k)}| \le \frac{1}{m+1}.\end{aligned}$$

The contradiction is reached in three steps:
1. Let $q_m^0 \in H_0^1(\Omega)$ be the unique solution to

$$\begin{cases} \textit{Find } q_m^0 \in H_0^1(\Omega) \textit{ such that}\\ \forall q \in H_0^1(\Omega),\ (\mathbf{grad}\, q_m^0 | \,\mathbf{grad}\, q) = (\boldsymbol{y}_m | \,\mathbf{grad}\, q)\end{cases}.$$

Because $\boldsymbol{y}_m$ belongs to $\boldsymbol{H}(\mathrm{div}, \Omega)$, taking $q = q_m^0$ above, one gets, by integrating by parts and using the Cauchy-Schwarz inequality,

$$\|\,\mathbf{grad}\, q_m^0\|^2_{\boldsymbol{L}^2(\Omega)} = (\boldsymbol{y}_m | \,\mathbf{grad}\, q_m^0) = -(\mathrm{div}\,\boldsymbol{y}_m | q_m^0) \le \|\,\mathrm{div}\,\boldsymbol{y}_m\|_{L^2(\Omega)} \|q_m^0\|_{L^2(\Omega)}.$$

Using the Poincaré inequality, one gets that

$$\|\,\mathbf{grad}\, q_m^0\|_{\boldsymbol{L}^2(\Omega)} \le C\,\|\,\mathrm{div}\,\boldsymbol{y}_m\|_{L^2(\Omega)},$$

with $C > 0$ independent of $\boldsymbol{y}_m$. Hence, $\lim_{m\to\infty} \|q_m^0\|_{H^1(\Omega)} = 0$.
2. Let $q_m^\Gamma \in Q_N(\Omega)$ be the unique[7] solution to

$$\begin{cases} \textit{Find } q_m^\Gamma \in Q_N(\Omega) \textit{ such that}\\ \forall q \in Q_N(\Omega),\ (\mathbf{grad}\, q_m^\Gamma | \,\mathbf{grad}\, q) = (\boldsymbol{y}_m | \,\mathbf{grad}\, q)\end{cases}.$$

Since q_m^Γ belongs to $Q_N(\Omega)$, it is determined by its (constant) values on Γ_ℓ for $1 \le \ell \le K$: let us write $q_m^\Gamma = \sum_{1\le\ell\le K} (q_{m|\Gamma_\ell}^\Gamma) q_\ell$. Choosing $q = q_m^\Gamma$ and integrating by parts, one finds

[7] The well-posedness of the variational formulation in $Q_N(\Omega)$ follows from the Lax-Milgram Theorem 4.2.8 and from the Poincaré inequality of Proposition 2.1.66.

$$\begin{aligned}\|\,\mathbf{grad}\, q_m^\Gamma\|^2_{\boldsymbol{L}^2(\Omega)} &= -(\operatorname{div}\boldsymbol{y}_m|q_m^\Gamma) + \langle \boldsymbol{y}_m\cdot\boldsymbol{n}, q_m^\Gamma\rangle_{H^{1/2}(\Gamma)}\\ &= -(\operatorname{div}\boldsymbol{y}_m|q_m^\Gamma) + \sum_{1\le\ell\le K}\overline{q_{m|\Gamma_\ell}^\Gamma}\,\langle \boldsymbol{y}_m\cdot\boldsymbol{n}, q_\ell\rangle_{H^{1/2}(\Gamma)}\\ &= -(\operatorname{div}\boldsymbol{y}_m|q_m^\Gamma) + \sum_{1\le\ell\le K}\overline{q_{m|\Gamma_\ell}^\Gamma}\,\langle \boldsymbol{y}_m\cdot\boldsymbol{n}, 1\rangle_{H^{1/2}(\Gamma_\ell)}.\end{aligned}$$

On the finite-dimensional vector space $Q_N(\Omega)$, all norms are equivalent, and among them, $q\mapsto \|q\|_{L^2(\Omega)}$, $q\mapsto \|\,\mathbf{grad}\, q\|_{\boldsymbol{L}^2(\Omega)}$ and $q\mapsto |(q_{|\Gamma_\ell})_{1\le\ell\le K}|_p$, $1\le p\le\infty$. Using the Cauchy-Schwarz inequality, one gets that

$$\|\,\mathbf{grad}\, q_m^\Gamma\|_{\boldsymbol{L}^2(\Omega)} \le C\{\|\operatorname{div}\boldsymbol{y}_m\|_{L^2(\Omega)} + \sum_{1\le k\le K}|\langle \boldsymbol{y}_m\cdot\boldsymbol{n}, 1\rangle_{H^{1/2}(\Gamma_k)}|\},$$

with $C>0$ independent of $\boldsymbol{y}_m$. Hence, $\lim_{m\to\infty}\|q_m^\Gamma\|_{H^1(\Omega)}=0$.
3. Setting now $\boldsymbol{z}_m := \boldsymbol{y}_m - \mathbf{grad}(q_m^0+q_m^\Gamma)\in \boldsymbol{H}_0(\mathbf{curl},\Omega)$, one has, by construction, $\mathbf{curl}\,\boldsymbol{z}_m = \mathbf{curl}\,\boldsymbol{y}_m$ and $\operatorname{div}\boldsymbol{z}_m=0$ in Ω, and in addition, $\langle \boldsymbol{z}_m\cdot\boldsymbol{n},1\rangle_{H^{1/2}(\Gamma_k)}=0$ for $1\le k\le K$. For the latter, given $1\le k\le K$, noting that $(\mathbf{grad}\, q_m^0|\,\mathbf{grad}\, q_k)=0$ because $\Delta q_k=0$ in Ω and $q_{m|\Gamma}^0=0$, it follows from the definition of q_m^Γ and integration by parts that:

$$\begin{aligned}0 &= (\boldsymbol{y}_m|\,\mathbf{grad}\, q_k) - (\mathbf{grad}\, q_m^\Gamma|\,\mathbf{grad}\, q_k) = (\boldsymbol{z}_m|\,\mathbf{grad}\, q_k)\\ &= \langle \boldsymbol{z}_m\cdot\boldsymbol{n}, q_k\rangle_{H^{1/2}(\Gamma)} = \langle \boldsymbol{z}_m\cdot\boldsymbol{n},1\rangle_{H^{1/2}(\Gamma_k)}.\end{aligned}$$

According to Theorem 3.4.1, there exists $\boldsymbol{w}_m\in \boldsymbol{H}^1_{zmv}(\Omega)$ such that $\boldsymbol{z}_m = \mathbf{curl}\,\boldsymbol{w}_m$ in Ω, with $\|\boldsymbol{w}_m\|_{\boldsymbol{H}^1(\Omega)}\le C\,\|\boldsymbol{z}_m\|_{\boldsymbol{L}^2(\Omega)}$ for $C>0$ independent of $\boldsymbol{z}_m$. From the integration by parts

$$\|\boldsymbol{z}_m\|^2_{\boldsymbol{L}^2(\Omega)} = (\boldsymbol{z}_m|\,\mathbf{curl}\,\boldsymbol{w}_m) = (\mathbf{curl}\,\boldsymbol{z}_m|\boldsymbol{w}_m) \le \|\,\mathbf{curl}\,\boldsymbol{y}_m\|_{\boldsymbol{L}^2(\Omega)}\|\boldsymbol{w}_m\|_{\boldsymbol{L}^2(\Omega)},$$

it follows that $\|\boldsymbol{z}_m\|_{\boldsymbol{L}^2(\Omega)}\le C\,\|\,\mathbf{curl}\,\boldsymbol{y}_m\|_{\boldsymbol{L}^2(\Omega)}$ and $\lim_{m\to\infty}\|\boldsymbol{z}_m\|_{\boldsymbol{L}^2(\Omega)}=0$. One concludes that $\lim_{m\to\infty}\|\boldsymbol{z}_m+\mathbf{grad}(q_m^0+q_m^\Gamma)\|_{\boldsymbol{L}^2(\Omega)}=0$, whereas by definition, $\boldsymbol{y}_m=\boldsymbol{z}_m+\mathbf{grad}(q_m^0+q_m^\Gamma)$, which contradicts the initial assumption that $\|\boldsymbol{y}_m\|_{\boldsymbol{L}^2(\Omega)}=1$ for all m. ■

A consequence of the first Weber inequality is that

$$\begin{aligned}(\boldsymbol{w},\boldsymbol{w}')\mapsto (\mathbf{curl}\,\boldsymbol{w}|\,\mathbf{curl}\,\boldsymbol{w}') &+ (\operatorname{div}\boldsymbol{w}|\operatorname{div}\boldsymbol{w}')\\ &+ \sum_{1\le k\le K}\langle \boldsymbol{w}\cdot\boldsymbol{n},1\rangle_{H^{1/2}(\Gamma_k)}\,\overline{\langle \boldsymbol{w}'\cdot\boldsymbol{n},1\rangle_{H^{1/2}(\Gamma_k)}}\end{aligned}$$

defines a scalar product on $\boldsymbol{X}_N(\Omega)$, denoted by $(\cdot,\cdot)_{\boldsymbol{X}_N(\Omega)}$, its associated norm $\|\cdot\|_{\boldsymbol{X}_N(\Omega)}$ being equivalent to the $\boldsymbol{H}(\mathbf{curl},\Omega)\cap\boldsymbol{H}(\operatorname{div},\Omega)$-norm.

Theorem 3.4.4 *In a domain Ω, it holds that $\boldsymbol{X}_N(\Omega)\subset_c \boldsymbol{L}^2(\Omega)$.*

Remark 3.4.5 *Albeit the proof below is direct, its structure is similar to that one of the proof of the first Weber inequality.*

Proof. Consider $(\boldsymbol{y}_m)_m$ a bounded sequence of $\boldsymbol{X}_N(\Omega)$. Following the proof of Theorem 3.4.3 and using the same notations, we build three sequences $(q_m^0)_m$, $(q_m^\Gamma)_m$ and $(\boldsymbol{w}_m)_m$ such that $\boldsymbol{y}_m = \mathbf{curl}\,\boldsymbol{w}_m + \mathbf{grad}(q_m^0 + q_m^\Gamma)$ for all m, with scalar potentials q_m^0 and q_m^Γ defined as the solution to variational formulations respectively set in $H_0^1(\Omega)$ and $Q_N(\Omega)$, and $\boldsymbol{w}_m$ as a vector potential that belongs to $\boldsymbol{H}^1_{zmv}(\Omega)$. Since one has

$$\begin{cases} \|\,\mathbf{grad}\, q_m^0\|_{\boldsymbol{L}^2(\Omega)} \le C' \,\|\operatorname{div} \boldsymbol{y}_m\|_{L^2(\Omega)} \\ \|\,\mathbf{grad}\, q_m^\Gamma\|_{\boldsymbol{L}^2(\Omega)} \le C'\{\|\operatorname{div} \boldsymbol{y}_m\|_{L^2(\Omega)} + \sum_{1\le k\le K} |\langle \boldsymbol{y}_m\cdot\boldsymbol{n}, 1\rangle_{H^{1/2}(\Gamma_k)}|\} \\ \|\boldsymbol{w}_m\|_{\boldsymbol{H}^1(\Omega)} \le C' \|\,\mathbf{curl}\, \boldsymbol{y}_m\|_{\boldsymbol{L}^2(\Omega)} \end{cases},$$

with $C' > 0$ independent of m, the boundedness of the sequence $(\boldsymbol{y}_m)_m$ implies that the three sequences of potentials are bounded in $H^1(\Omega)$-norm. Observe first that the potentials $(q_m^\Gamma)_m$ belong to the finite-dimensional vector space $Q_N(\Omega)$, so one can extract a subsequence, still denoted by $(q_m^\Gamma)_m$, that converges in $H^1(\Omega)$-norm. Thanks to Proposition 2.1.43, one can extract subsequences (with the same indices), still denoted by $(q_0^\Gamma)_m$ and $(\boldsymbol{w}_m)_m$, that converge in $L^2(\Omega)$ for the scalar potential, respectively in $\boldsymbol{L}^2(\Omega)$ for the vector potential. Let us prove now that both subsequences $(\mathbf{grad}\, q_m^0)_m$ and $(\mathbf{curl}\,\boldsymbol{w}_m)_m$ converge in $\boldsymbol{L}^2(\Omega)$.
Going back to the definition of the scalar potentials $(q_m^0)_m$ and denoting $\boldsymbol{y}_{mn} := \boldsymbol{y}_m - \boldsymbol{y}_n$, $q_{mn}^0 := q_m^0 - q_n^0$, one has, in particular,

$$\forall q \in H_0^1(\Omega),\ (\mathbf{grad}\, q_{mn}^0 | \,\mathbf{grad}\, q) = (\boldsymbol{y}_{mn} | \,\mathbf{grad}\, q) = -(\operatorname{div} \boldsymbol{y}_{mn} | q),$$

therefore, by taking $q = q_{mn}^0$, it follows that

$$\begin{aligned} \|\,\mathbf{grad}\, q_{mn}^0\|^2_{\boldsymbol{L}^2(\Omega)} &\le \|\operatorname{div} \boldsymbol{y}_{mn}\|_{L^2(\Omega)}\, \|q_{mn}^0\|_{L^2(\Omega)} \\ &\le 2 \sup_m (\|\operatorname{div} \boldsymbol{y}_m\|_{L^2(\Omega)})\, \|q_{mn}^0\|_{L^2(\Omega)}. \end{aligned}$$

So, $(\mathbf{grad}\, q_m^0)_m$ is a Cauchy sequence in $\boldsymbol{L}^2(\Omega)$, and it converges in this space. Note that $\mathbf{curl}\,\boldsymbol{w}_m \in \boldsymbol{H}_0(\mathbf{curl}, \Omega)$ with $\mathbf{curl}\,\mathbf{curl}\,\boldsymbol{w}_m = \mathbf{curl}\,\boldsymbol{y}_m$. Finally, denoting $\boldsymbol{w}_{mn} := \boldsymbol{w}_m - \boldsymbol{w}_n$, we find, by integration by parts, that

$$\|\,\mathbf{curl}\,\boldsymbol{w}_{mn}\|^2_{\boldsymbol{L}^2(\Omega)} = (\mathbf{curl}\,\boldsymbol{y}_{mn} | \boldsymbol{w}_{mn}) \le 2 \sup_m (\|\,\mathbf{curl}\,\boldsymbol{y}_m\|_{\boldsymbol{L}^2(\Omega)})\, \|\boldsymbol{w}_{mn}\|_{\boldsymbol{L}^2(\Omega)}.$$

Then, $(\mathbf{curl}\,\boldsymbol{w}_m)_m$ is a Cauchy, hence converging, sequence in $\boldsymbol{L}^2(\Omega)$.
Recall that $\boldsymbol{y}_m = \mathbf{curl}\,\boldsymbol{w}_m + \mathbf{grad}(q_m^0 + q_m^\Gamma)$, so we conclude that the subsequence $(\boldsymbol{y}_m)_m$ converges in $\boldsymbol{L}^2(\Omega)$. ■

3.5 Extraction of vector potentials – Vanishing normal trace

We consider now the case of divergence-free fields of $\boldsymbol{L}^2(\Omega)$ with vanishing normal trace. As we already saw in §3.3 for elements of $\boldsymbol{Z}_T(\Omega)$, if the domain Ω is not topologically trivial, one has to take cuts into account explicitly.

Theorem 3.5.1 *Let Ω be a domain such that* $\mathbf{(Top)}_{I=0}$ *or* $\mathbf{(Top)}_{I>0}$ *is fulfilled. Then, given $\boldsymbol{v} \in \boldsymbol{L}^2(\Omega)$, it holds that*

$$\left.\begin{array}{l} \operatorname{div} \boldsymbol{v} = 0 \text{ in } \Omega, \\ \boldsymbol{v} \cdot \boldsymbol{n}_{|\Gamma} = 0, \\ \langle \boldsymbol{v} \cdot \boldsymbol{n}, 1 \rangle_{\Sigma_i} = 0, \ \forall i \end{array}\right\} \Longleftrightarrow \left\{\begin{array}{l} \exists \boldsymbol{w} \in \boldsymbol{H}_0(\mathbf{curl}, \Omega), \\ \operatorname{div} \boldsymbol{w} = 0, \\ \langle \boldsymbol{w} \cdot \boldsymbol{n}, 1 \rangle_{H^{1/2}(\Gamma_k)} = 0, \ \forall k \end{array}\right. \quad \boldsymbol{v} = \mathbf{curl}\, \boldsymbol{w}. \tag{3.10}$$

Moreover, $\boldsymbol{w}$ is unique, and there exists $C > 0$ independent of $\boldsymbol{v}$ such that

$$\|\boldsymbol{w}\|_{\boldsymbol{H}(\mathbf{curl},\Omega)} \leq C \, \|\boldsymbol{v}\|_{\boldsymbol{L}^2(\Omega)}.$$

Remark 3.5.2 *Assuming that $\boldsymbol{v}$ writes $\boldsymbol{v} = \mathbf{curl}\, \boldsymbol{w}$ with $\boldsymbol{w} \in \boldsymbol{H}_0(\mathbf{curl}, \Omega)$, one has $\boldsymbol{v} \in \boldsymbol{H}_0(\operatorname{div}, \Omega)$ according to Proposition 2.2.10. Now, using the functions $(\dot{r}_i)_{1 \leq i \leq I}$ as they are defined in Proposition 3.3.3, one obtains, by integrating by parts twice ((3.6), then (2.20)), for each i,*

$$\begin{aligned} \langle \boldsymbol{v} \cdot \boldsymbol{n}, 1 \rangle_{\Sigma_i} &= \sum_j \langle \boldsymbol{v} \cdot \boldsymbol{n}, [\dot{r}_i]_{\Sigma_j} \rangle_{\Sigma_j} \\ &= (\mathbf{curl}\, \boldsymbol{w}, \mathbf{grad}\, \dot{r}_i)_{\boldsymbol{L}^2(\dot{\Omega})} = (\mathbf{curl}\, \boldsymbol{w} | \widetilde{\mathbf{grad}\, \dot{r}_i}) = 0. \end{aligned}$$

In the case when $\mathbf{(Top)}_{I=0}$ *is fulfilled, $\boldsymbol{Z}_T(\Omega) = \{0\}$, and there are no vanishing flux conditions for the field $\boldsymbol{v}$ on the cuts.*

Proof. We note that the vector potential $\boldsymbol{w}$, if it exists, is unique. Indeed, if $\boldsymbol{w}_1$ and $\boldsymbol{w}_2$ both fulfill all the conditions (3.10), then $\delta \boldsymbol{w} := \boldsymbol{w}_1 - \boldsymbol{w}_2 \in \boldsymbol{X}_N(\Omega)$, $\mathbf{curl}\, \delta \boldsymbol{w} = 0$ and $\operatorname{div} \delta \boldsymbol{w} = 0$ in Ω, with $\langle \delta \boldsymbol{w} \cdot \boldsymbol{n}, 1 \rangle_{H^{1/2}(\Gamma_k)} = 0$, for all k. Hence, $\delta \boldsymbol{w} = 0$, so uniqueness follows.
Next, introducing the (closed) subspace of $\boldsymbol{X}_N(\Omega)$:

$$\boldsymbol{X}_N^{\Gamma}(\Omega) := \{ \boldsymbol{f} \in \boldsymbol{X}_N(\Omega) \ : \ \langle \boldsymbol{f} \cdot \boldsymbol{n}, 1 \rangle_{H^{1/2}(\Gamma_k)} = 0, \ 1 \leq k \leq K \},$$

one can solve the variational formulation[8]

$$\left\{\begin{array}{l} \textit{Find } \boldsymbol{w} \in \boldsymbol{X}_N^{\Gamma}(\Omega) \textit{ such that} \\ \forall \boldsymbol{w}' \in \boldsymbol{X}_N^{\Gamma}(\Omega), \ (\mathbf{curl}\, \boldsymbol{w} | \, \mathbf{curl}\, \boldsymbol{w}') + (\operatorname{div} \boldsymbol{w} | \operatorname{div} \boldsymbol{w}') = (\boldsymbol{v} | \, \mathbf{curl}\, \boldsymbol{w}') \end{array}\right. .$$

By construction, one has $\langle \boldsymbol{w} \cdot \boldsymbol{n}, 1 \rangle_{H^{1/2}(\Gamma_k)} = 0$, for $1 \leq k \leq K$. For $k = 0$, the property is checked below.
Let us prove now that $\operatorname{div} \boldsymbol{w} = 0$ in Ω. Given $g \in L^2(\Omega)$, there is one, and only one, $q \in H_0^1(\Omega)$ such that $\Delta q = g$ in Ω. Define $\boldsymbol{w}^- = \mathbf{grad}\, q \in \boldsymbol{H}_0(\mathbf{curl}, \Omega)$ (cf. Proposition 2.2.10), with $\mathbf{curl}\, \boldsymbol{w}^- = 0$ in Ω: one has $\operatorname{div} \boldsymbol{w}^- = g \in L^2(\Omega)$, so $\boldsymbol{w}^- \in \boldsymbol{X}_N(\Omega)$. Then, proceeding as in the proof of Theorem 3.3.9, define the column vector $\boldsymbol{\beta}$ with entries $\beta_\ell = \langle \boldsymbol{w}^- \cdot \boldsymbol{n}, 1 \rangle_{H^{1/2}(\Gamma_\ell)}$, $1 \leq \ell \leq K$, and set

[8] Noting that $(\boldsymbol{w}, \boldsymbol{w}') \mapsto (\mathbf{curl}\, \boldsymbol{w} | \, \mathbf{curl}\, \boldsymbol{w}') + (\operatorname{div} \boldsymbol{w} | \operatorname{div} \boldsymbol{w}')$ is equal to the scalar product $(\cdot, \cdot)_{\boldsymbol{X}_N(\Omega)}$ on $\boldsymbol{X}_N^{\Gamma}(\Omega)$, well-posedness simply stems from the Riesz Theorem 4.2.1.

$\boldsymbol{w}' = \boldsymbol{w}^- - \sum_{1\le m\le K} \alpha_m \,\mathbf{grad}\, q_m$, where $\boldsymbol{\alpha} = (\alpha_m)_m$ solves the linear system with the capacitance matrix $\mathbb{C}\boldsymbol{\alpha} = \boldsymbol{\beta}$. By construction, the field $\boldsymbol{w}'$ belongs to $\boldsymbol{X}_N^\Gamma(\Omega)$, with $\mathbf{curl}\,\boldsymbol{w}' = 0$, $\operatorname{div}\boldsymbol{w}' = g$ in Ω. Using this test function in the variational formulation, one gets that $(\operatorname{div}\boldsymbol{w}|g) = 0$. This is true for all $g \in L^2(\Omega)$, so that $\operatorname{div}\boldsymbol{w} = 0$ in Ω.
In particular, it follows that $\langle \boldsymbol{w}\cdot\boldsymbol{n}, 1\rangle_{H^{1/2}(\Gamma_0)} = (\operatorname{div}\boldsymbol{w}|1) = 0$.
Let us prove next that $\mathbf{curl}\,\boldsymbol{w} = \boldsymbol{v}$ in Ω. Because $\boldsymbol{v}\cdot\boldsymbol{n}_{|\Gamma} = 0$, $\boldsymbol{f} := \mathbf{curl}\,\boldsymbol{w} - \boldsymbol{v}$ belongs to $\boldsymbol{H}_0(\operatorname{div},\Omega)$ (cf. Proposition 2.2.10) and since $\operatorname{div}\boldsymbol{v} = 0$ in Ω by assumption, one has $\operatorname{div}\boldsymbol{f} = 0$ in Ω.
Remark that $\boldsymbol{D}(\Omega)$ is a subset of $\boldsymbol{X}_N^\Gamma(\Omega)$, so one can take $\boldsymbol{w}' \in \boldsymbol{D}(\Omega)$ and use it as a test function in the variational formulation:

$$\langle \mathbf{curl}\,\boldsymbol{f}, \boldsymbol{w}'\rangle = (\boldsymbol{f}|\,\mathbf{curl}\,\boldsymbol{w}') = (\mathbf{curl}\,\boldsymbol{w}|\,\mathbf{curl}\,\boldsymbol{w}') - (\boldsymbol{v}|\,\mathbf{curl}\,\boldsymbol{w}') = 0.$$

Hence, $\mathbf{curl}\,\boldsymbol{f} = 0$, and so $\boldsymbol{f} \in \boldsymbol{Z}_T(\Omega)$. By assumption, one has $\langle \boldsymbol{v}\cdot\boldsymbol{n}, 1\rangle_{\Sigma_i} = 0$ for all i and, according to Remark 3.5.2, likewise for $\mathbf{curl}\,\boldsymbol{w}$, so it holds for $\boldsymbol{f}$ too. Due to Proposition 3.3.13, we have $\boldsymbol{f} = 0$, i.e., $\mathbf{curl}\,\boldsymbol{w} = \boldsymbol{v}$ in Ω.
Finally, using the first Weber inequality, we have $\|\boldsymbol{w}\|_{\boldsymbol{L}^2(\Omega)} \le C_W \,\|\,\mathbf{curl}\,\boldsymbol{w}\|_{\boldsymbol{L}^2(\Omega)}$, so we conclude that

$$\|\boldsymbol{w}\|_{\boldsymbol{L}^2(\Omega)} + \|\,\mathbf{curl}\,\boldsymbol{w}\|_{\boldsymbol{L}^2(\Omega)} \le (1 + C_W)\,\|\boldsymbol{v}\|_{\boldsymbol{L}^2(\Omega)}.$$

■

Thanks to the result of Theorem 3.5.1 regarding the extraction of vector potentials for fields with vanishing normal trace, we can now derive interesting properties of the function space

$$\boldsymbol{X}_T(\Omega) := \boldsymbol{H}(\mathbf{curl},\Omega) \cap \boldsymbol{H}_0(\operatorname{div},\Omega).$$

The first property allows one to bound the $\boldsymbol{L}^2(\Omega)$-norm of elements of $\boldsymbol{X}_T(\Omega)$, similar to the Poincaré inequalities, and the second one is the compact imbedding of $\boldsymbol{X}_T(\Omega)$ in $\boldsymbol{L}^2(\Omega)$. Both results were first discovered by Weber [206].

Theorem 3.5.3 `(Second Weber inequality)` *Let Ω be a domain such that* $\mathbf{(Top)}_{I=0}$ *or* $\mathbf{(Top)}_{I>0}$ *is fulfilled. There exists $C'_W > 0$ such that*

$$\begin{aligned}&\forall \boldsymbol{y} \in \boldsymbol{X}_T(\Omega),\\ &\|\boldsymbol{y}\|_{\boldsymbol{L}^2(\Omega)} \le C'_W\{\|\,\mathbf{curl}\,\boldsymbol{y}\|_{\boldsymbol{L}^2(\Omega)} + \|\operatorname{div}\boldsymbol{y}\|_{L^2(\Omega)} + \sum_{1\le i\le I} |\langle \boldsymbol{y}\cdot\boldsymbol{n}, 1\rangle_{\Sigma_i}|\}.\end{aligned}$$

Proof. Let us proceed by contradiction: if the claim is not true, then

$$\begin{aligned}&\exists (\boldsymbol{y}_m)_m \in \boldsymbol{X}_T(\Omega)^{\mathbb{N}} \text{ such that } \forall m,\ \|\boldsymbol{y}_m\|_{\boldsymbol{L}^2(\Omega)} = 1,\\ &\|\,\mathbf{curl}\,\boldsymbol{y}_m\|_{\boldsymbol{L}^2(\Omega)} + \|\operatorname{div}\boldsymbol{y}_m\|_{L^2(\Omega)} + \textstyle\sum_{1\le i\le I} |\langle \boldsymbol{y}_m\cdot\boldsymbol{n}, 1\rangle_{\Sigma_i}| \le \frac{1}{m+1}.\end{aligned}$$

Similarly to the proof of the first Weber inequality, we shall reach the contradiction in three steps:

1. Let $q_m^0 \in H^1_{zmv}(\Omega)$ be the unique solution[9] to

$$\begin{cases} \textit{Find } q_m^0 \in H^1_{zmv}(\Omega) \textit{ such that} \\ \forall q \in H^1_{zmv}(\Omega),\ (\mathbf{grad}\, q_m^0 | \,\mathbf{grad}\, q) = (\boldsymbol{y}_m | \,\mathbf{grad}\, q) \end{cases}.$$

Recall that $\boldsymbol{y}_m \in \boldsymbol{H}_0(\mathrm{div}, \Omega)$. Taking $q = q_m^0$ above, one gets, by integrating by parts and using the Cauchy-Schwarz inequality,

$$\|\,\mathbf{grad}\, q_m^0\|^2_{\boldsymbol{L}^2(\Omega)} \leq \|\,\mathrm{div}\, \boldsymbol{y}_m\|_{L^2(\Omega)} \|q_m^0\|_{L^2(\Omega)}.$$

Using the Poincaré-Wirtinger inequality, one gets that

$$\|\,\mathbf{grad}\, q_m^0\|_{\boldsymbol{L}^2(\Omega)} \leq C\, \|\,\mathrm{div}\, \boldsymbol{y}_m\|_{L^2(\Omega)},$$

with $C > 0$ independent of $\boldsymbol{y}_m$. Hence, $\lim_{m\to\infty} \|\,\mathbf{grad}\, q_m^0\|_{\boldsymbol{L}^2(\Omega)} = 0$.
2. Let $\dot{q}_m^\Sigma \in Q_T(\dot{\Omega})$ be the unique solution to

$$\begin{cases} \textit{Find } \dot{q}_m^\Sigma \in Q_T(\dot{\Omega}) \textit{ such that} \\ \forall \dot{q} \in Q_T(\dot{\Omega}), \quad (\mathbf{grad}\, \dot{q}_m^\Sigma, \mathbf{grad}\, \dot{q})_{\boldsymbol{L}^2(\dot{\Omega})} = (\boldsymbol{y}_m, \mathbf{grad}\, \dot{q})_{\boldsymbol{L}^2(\dot{\Omega})} \end{cases}.$$

Choosing $\dot{q} = \dot{q}_m^\Sigma$ and using the integration-by-parts formula (3.6), one finds

$$\begin{aligned} \|\,\mathbf{grad}\, \dot{q}_m^\Sigma\|^2_{\boldsymbol{L}^2(\dot{\Omega})} &= -(\mathrm{div}\, \boldsymbol{y}_m, \dot{q}_m^\Sigma)_{L^2(\dot{\Omega})} + \sum_{1\leq i\leq I} \langle \boldsymbol{y}_m \cdot \boldsymbol{n}, [\dot{q}_m^\Sigma]_{\Sigma_i} \rangle_{\Sigma_i} \\ &= -(\mathrm{div}\, \boldsymbol{y}_m, \dot{q}_m^\Sigma)_{L^2(\dot{\Omega})} + \sum_{1\leq i\leq I} [\overline{\dot{q}_m^\Sigma}]_{\Sigma_i} \langle \boldsymbol{y}_m \cdot \boldsymbol{n}, 1 \rangle_{\Sigma_i}. \end{aligned}$$

On the finite-dimensional vector space $Q_T(\dot{\Omega})$, all norms are equivalent, and among them, $\dot{q} \mapsto \|\dot{q}\|_{L^2(\dot{\Omega})}$, $\dot{q} \mapsto \|\,\mathbf{grad}\, \dot{q}\|_{\boldsymbol{L}^2(\dot{\Omega})}$ and $\dot{q} \mapsto |([\dot{q}]_{\Sigma_i})_{1\leq i\leq I}|_p$, $1 \leq p \leq \infty$ (see Proposition 3.3.13 for the last one). Using the Cauchy-Schwarz inequality, one finds that

$$\|\,\mathbf{grad}\, \dot{q}_m^\Sigma\|_{\boldsymbol{L}^2(\dot{\Omega})} \leq C\{\|\,\mathrm{div}\, \boldsymbol{y}_m\|_{L^2(\Omega)} + \sum_{1\leq i\leq I} |\langle \boldsymbol{y}_m \cdot \boldsymbol{n}, 1 \rangle_{\Sigma_i}|\},$$

with $C > 0$ independent of $\boldsymbol{y}_m$. Hence, $\lim_{m\to\infty} \|\widetilde{\mathbf{grad}\, \dot{q}_m^\Sigma}\|_{\boldsymbol{L}^2(\Omega)} = 0$.
3. Setting now $\boldsymbol{z}_m := \boldsymbol{y}_m - \mathbf{grad}\, q_m^0 - \widetilde{\mathbf{grad}\, \dot{q}_m^\Sigma} \in \boldsymbol{X}_T(\Omega)$, one has, by construction, $\mathbf{curl}\, \boldsymbol{z}_m = \mathbf{curl}\, \boldsymbol{y}_m$ and $\mathrm{div}\, \boldsymbol{z}_m = 0$ in Ω, $\boldsymbol{z}_m \cdot \boldsymbol{n} = 0$ on Γ, and in addition, $\langle \boldsymbol{z}_m \cdot \boldsymbol{n}, 1 \rangle_{\Sigma_i} = 0$ for $1 \leq i \leq I$. Indeed, for the basis functions $(\dot{q}_i)_i$

[9] Due to the Lax-Milgram Theorem 4.2.8 and to the Poincaré-Wirtinger inequality of Theorem 2.1.37 in $H^1_{zmv}(\Omega)$, the variational formulation is well-posed. In addition, one can obviously add the case of constant test functions $q = cst$ in the variational formulation: $(\mathbf{grad}\, q_m^0 | \,\mathbf{grad}\, cst) = 0 = (\boldsymbol{y}_m | \,\mathbf{grad}\, cst)$. It follows that all test functions $q \in H^1(\Omega)$ can be used, and hence one finds that $\Delta q_m^0 = \mathrm{div}\, \boldsymbol{y}_m$ in Ω and $\partial_n q_m^0 = \boldsymbol{y}_m \cdot \boldsymbol{n} = 0$ on Γ.

of $Q_T(\dot{\Omega})$, one has $(\mathbf{grad}\, q_m^0 | \widetilde{\mathbf{grad}\, \dot{q}_i}) = 0$, because $\mathrm{div}(\widetilde{\mathbf{grad}\, \dot{q}_i}) = 0$ in Ω and $\partial_n(\widetilde{\mathbf{grad}\, \dot{q}_i}) = 0$ on Γ. On the other hand, it follows from the definition of $\dot{q}_m^\Sigma$ and integration by parts (3.6) that, for $1 \le i \le I$,

$$\begin{aligned} 0 &= (\boldsymbol{y}_m, \mathbf{grad}\, \dot{q}_i)_{\boldsymbol{L}^2(\dot{\Omega})} - (\mathbf{grad}\, \dot{q}_m^\Sigma, \mathbf{grad}\, \dot{q}_i)_{\boldsymbol{L}^2(\dot{\Omega})} = (\boldsymbol{z}_m, \mathbf{grad}\, \dot{q}_i)_{\boldsymbol{L}^2(\dot{\Omega})} \\ &= \sum_{1 \le j \le I} \langle \boldsymbol{z}_m \cdot \boldsymbol{n}, [\dot{q}_i]_{\Sigma_j} \rangle_{\Sigma_j} = \langle \boldsymbol{z}_m \cdot \boldsymbol{n}, 1 \rangle_{\Sigma_i}. \end{aligned}$$

According to Theorem 3.5.1, there exists $\boldsymbol{w}_m \in \boldsymbol{X}_N(\Omega)$ such that $\boldsymbol{z}_m = \mathbf{curl}\, \boldsymbol{w}_m$ in Ω, with $\|\boldsymbol{w}_m\|_{\boldsymbol{H}(\mathbf{curl},\Omega)} \le C \|\boldsymbol{z}_m\|_{\boldsymbol{L}^2(\Omega)}$ for $C > 0$ independent of $\boldsymbol{z}_m$. By integration by parts and with the help of the Cauchy-Schwarz inequality, one now finds that $\|\boldsymbol{z}_m\|^2_{\boldsymbol{L}^2(\Omega)} \le \|\mathbf{curl}\, \boldsymbol{y}_m\|_{\boldsymbol{L}^2(\Omega)} \|\boldsymbol{w}_m\|_{\boldsymbol{L}^2(\Omega)}$. Thus, $\|\boldsymbol{z}_m\|_{\boldsymbol{L}^2(\Omega)} \le C \|\mathbf{curl}\, \boldsymbol{y}_m\|_{\boldsymbol{L}^2(\Omega)}$ and $\lim_{m\to\infty} \|\boldsymbol{z}_m\|_{\boldsymbol{L}^2(\Omega)} = 0$.
One concludes that $\lim_{m\to\infty} \|\boldsymbol{z}_m + \mathbf{grad}\, q_m^0 + \widetilde{\mathbf{grad}\, \dot{q}_m^\Sigma}\|_{\boldsymbol{L}^2(\Omega)} = 0$, which contradicts the assumption that $\|\boldsymbol{y}_m\|_{\boldsymbol{L}^2(\Omega)} = 1$ for all m. ■

A by-product of the second Weber inequality is that

$$(\boldsymbol{w}, \boldsymbol{w}') \mapsto (\mathbf{curl}\, \boldsymbol{w} | \mathbf{curl}\, \boldsymbol{w}') + (\mathrm{div}\, \boldsymbol{w} | \mathrm{div}\, \boldsymbol{w}') + \sum_{1 \le i \le I} \langle \boldsymbol{w} \cdot \boldsymbol{n}, 1 \rangle_{\Sigma_i} \overline{\langle \boldsymbol{w}' \cdot \boldsymbol{n}, 1 \rangle_{\Sigma_i}}$$

defines a scalar product on $\boldsymbol{X}_T(\Omega)$, denoted by $(\cdot,\cdot)_{\boldsymbol{X}_T(\Omega)}$, its associated norm $\|\cdot\|_{\boldsymbol{X}_T(\Omega)}$ being equivalent to the $\boldsymbol{H}(\mathbf{curl}, \Omega) \cap \boldsymbol{H}(\mathrm{div}, \Omega)$-norm.

Theorem 3.5.4 *Let Ω be a domain such that* $(\mathbf{Top})_{I=0}$ *or* $(\mathbf{Top})_{I>0}$ *is fulfilled. It holds that $\boldsymbol{X}_T(\Omega) \subset_c \boldsymbol{L}^2(\Omega)$.*

Proof. Let $(\boldsymbol{y}_m)_m$ be a bounded sequence of $\boldsymbol{X}_T(\Omega)$. As in the proof of Theorem 3.5.3, and using the same notations, we build sequences $(q_m^0)_m$, $(\dot{q}_m^\Sigma)_m$ and $(\boldsymbol{w}_m)_m$ such that $\boldsymbol{y}_m = \mathbf{curl}\, \boldsymbol{w}_m + \mathbf{grad}\, q_m^0 + \widetilde{\mathbf{grad}\, \dot{q}_m^\Sigma}$ for all m, with scalar potentials q_m^0 and $\dot{q}_m^\Sigma$ defined as the solution to variational formulations respectively set in $H^1_{zmv}(\Omega)$ and $Q_T(\dot{\Omega})$, and $\boldsymbol{w}_m$ as a vector potential that belongs to $\boldsymbol{X}_N(\Omega)$. Moreover, the boundedness of $(\boldsymbol{y}_m)_m$ implies that all three sequences are bounded in those function spaces.
The potentials $(\dot{q}_m^\Sigma)_m$ belong to the finite-dimensional vector space $Q_T(\dot{\Omega})$, so one can extract a subsequence, still denoted by $(\dot{q}_m^\Sigma)_m$, that converges in $H^1(\Omega)$-norm. Next, thanks to Proposition 2.1.43, one can extract a subsequence, denoted by $(q_m^0)_m$, that converges in $L^2(\Omega)$. According to the compact imbedding of $\boldsymbol{X}_N(\Omega)$ in $\boldsymbol{L}^2(\Omega)$ (Theorem 3.4.4), one can finally extract a subsequence, denoted by $(\boldsymbol{w}_m)_m$, that converges in $\boldsymbol{L}^2(\Omega)$.
Let us prove now that the subsequences $(\mathbf{grad}\, q_m^0)_m$ and $(\mathbf{curl}\, \boldsymbol{w}_m)_m$ converge in $\boldsymbol{L}^2(\Omega)$. Denoting $\boldsymbol{y}_{mn} := \boldsymbol{y}_m - \boldsymbol{y}_n$, $q_{mn}^0 := q_m^0 - q_n^0$, one has

$$\forall q \in H^1_{zmv}(\Omega),\ (\mathbf{grad}\, q_{mn}^0 | \mathbf{grad}\, q) = -(\mathrm{div}\, \boldsymbol{y}_{mn} | q).$$

By taking $q = q_{mn}^0$, it follows that

$$\|\,\mathbf{grad}\, q^0_{mn}\|^2_{\boldsymbol{L}^2(\Omega)} \le 2 \sup_m (\|\operatorname{div} \boldsymbol{y}_m\|_{L^2(\Omega)})\, \|q^0_{mn}\|_{L^2(\Omega)}.$$

So, $(\mathbf{grad}\, q^0_m)_m$ is a Cauchy sequence in $\boldsymbol{L}^2(\Omega)$, and it converges in this space. Recall that $\mathbf{curl}\,\mathbf{curl}\,\boldsymbol{w}_m = \mathbf{curl}\,\boldsymbol{y}_m \in \boldsymbol{L}^2(\Omega)$, so denoting $\boldsymbol{w}_{mn} := \boldsymbol{w}_m - \boldsymbol{w}_n$, we find, by one last integration by parts, that

$$\|\,\mathbf{curl}\,\boldsymbol{w}_{mn}\|^2_{\boldsymbol{L}^2(\Omega)} = (\mathbf{curl}\,\boldsymbol{y}_{mn}|\boldsymbol{w}_{mn}) \le 2 \sup_m (\|\,\mathbf{curl}\,\boldsymbol{y}_m\|_{\boldsymbol{L}^2(\Omega)})\, \|\boldsymbol{w}_{mn}\|_{\boldsymbol{L}^2(\Omega)}.$$

Then, $(\mathbf{curl}\,\boldsymbol{w}_m)_m$ is a Cauchy, hence converging, sequence in $\boldsymbol{L}^2(\Omega)$.
As $\boldsymbol{y}_m = \mathbf{curl}\,\boldsymbol{w}_m + \mathbf{grad}\, q^0_m + \widetilde{\mathbf{grad}\, \dot{q}^\Sigma_m}$, we conclude that the subsequence $(\boldsymbol{y}_m)_m$ converges in $\boldsymbol{L}^2(\Omega)$. ■

3.6 Extraction of vector potentials – Complements

In the proofs of the results of §§3.3–3.5, we remark that the fundamental results (extraction of scalar potentials at Theorem 3.3.1, respectively of vector potentials at Theorem 3.4.1) are obtained by continuation to $\mathbb{R}^3$, and direct estimates of the norms. On the other hand, all the other proofs rely on solving (well-posed) variational formulations, for which norm estimates are simply a consequence of the Lax-Milgram Theorem 4.2.8.

To obtain the compact imbedding results, the proofs – *à la* Weber [206] – that we proposed are obtained via the extraction of scalar and vector potentials. In Chapter 6, we propose another, indirect proof, which relies on the continuous imbeddings of $\boldsymbol{X}_N(\Omega)$ (§6.1.6) and $\boldsymbol{X}_T(\Omega)$ (§6.2.6) into fractional-order Sobolev spaces $\boldsymbol{H}^s(\Omega)$, for some $s > 0$ that depends only on the geometry of the domain Ω. The additional knowledge on the regularity of elements of $\boldsymbol{X}_N(\Omega)$ and $\boldsymbol{X}_T(\Omega)$ will be used there. The compact imbedding results are then consequences of Proposition 2.1.43.

If one is looking for a vector potential that does not necessarily belong to $\boldsymbol{H}^1(\Omega)$ for divergence-free fields, one has the result below, which "symmetrizes" the roles of $\boldsymbol{X}_T(\Omega)$ and $\boldsymbol{X}_N(\Omega)$.

Theorem 3.6.1 *Let Ω be a domain such that* $(\mathbf{Top})_{I=0}$ *or* $(\mathbf{Top})_{I>0}$ *is fulfilled. Then, given $\boldsymbol{v} \in \boldsymbol{L}^2(\Omega)$, it holds that*

$$\left.\begin{array}{l} \operatorname{div} \boldsymbol{v} = 0 \text{ in } \Omega, \\ \langle \boldsymbol{v}\cdot\boldsymbol{n}, 1\rangle_{H^{1/2}(\Gamma_k)} = 0,\ \forall k \end{array}\right\} \iff \left\{\begin{array}{l} \exists \boldsymbol{w} \in \boldsymbol{H}_0(\operatorname{div},\Omega), \\ \operatorname{div} \boldsymbol{w} = 0, \\ \langle \boldsymbol{w}\cdot\boldsymbol{n}, 1\rangle_{\Sigma_i} = 0,\ \forall i \end{array}\right. \quad \boldsymbol{v} = \mathbf{curl}\,\boldsymbol{w}. \tag{3.11}$$

Moreover, $\boldsymbol{w}$ is unique, and there exists $C > 0$ independent of $\boldsymbol{v}$ such that

$$\|\boldsymbol{w}\|_{\boldsymbol{H}(\mathbf{curl},\Omega)} \le C\, \|\boldsymbol{v}\|_{\boldsymbol{L}^2(\Omega)}.$$

Remark 3.6.2 *In the case when* $\mathbf{(Top)}_{I=0}$ *is fulfilled, the result holds without the vanishing flux conditions on the cuts for the vector potential! In this case, we recall that* $\boldsymbol{Z}_T(\Omega)$ *is reduced to* $\{0\}$ *(Proposition 3.3.11).*

Proof. The uniqueness of the vector potential $\boldsymbol{w}$, if it exists, follows from the second Weber inequality. Indeed, if $\boldsymbol{w}_1$ and $\boldsymbol{w}_2$ both fulfill all the conditions (3.11), then $\delta\boldsymbol{w} := \boldsymbol{w}_1 - \boldsymbol{w}_2 \in \boldsymbol{X}_T(\Omega)$, $\mathbf{curl}\,\delta\boldsymbol{w} = 0$ and $\operatorname{div}\delta\boldsymbol{w} = 0$ in Ω, with $\langle\delta\boldsymbol{w}\cdot\boldsymbol{n}, 1\rangle_{\Sigma_i} = 0$, for all i. Hence, $\delta\boldsymbol{w} = 0$, so uniqueness follows.
Next, introducing the (closed) subspace of $\boldsymbol{X}_T(\Omega)$:

$$\boldsymbol{X}_T^{\Sigma}(\Omega) := \{\boldsymbol{f} \in \boldsymbol{X}_T(\Omega) \ : \ \langle\boldsymbol{f}\cdot\boldsymbol{n}, 1\rangle_{\Sigma_i} = 0,\ 1 \le i \le I\},$$

one can solve the variational formulation[10]

$$\begin{cases} \textit{Find } \boldsymbol{w} \in \boldsymbol{X}_T^{\Sigma}(\Omega) \textit{ such that} \\ \forall \boldsymbol{w}' \in \boldsymbol{X}_T^{\Sigma}(\Omega),\ (\mathbf{curl}\,\boldsymbol{w}|\,\mathbf{curl}\,\boldsymbol{w}') + (\operatorname{div}\boldsymbol{w}|\operatorname{div}\boldsymbol{w}') = (\boldsymbol{v}|\,\mathbf{curl}\,\boldsymbol{w}') \end{cases}.$$

By construction, one has $\langle\boldsymbol{w}\cdot\boldsymbol{n}, 1\rangle_{\Sigma_i} = 0$, for $1 \le i \le I$.
Let us prove now that $\operatorname{div}\boldsymbol{w} = 0$ in Ω, which amounts to $(\operatorname{div}\boldsymbol{w}|g) = 0$ for all $g \in L^2(\Omega)$. First, as $\boldsymbol{w}\cdot\boldsymbol{n}_{|\Gamma} = 0$, we have $(\operatorname{div}\boldsymbol{w}|1) = 0$. Next, given $g \in L^2_{zmv}(\Omega)$, there is one, and only one, $q \in H^1_{zmv}(\Omega)$ such that[11] $\Delta q = g$ in Ω with $\partial_n q_{|\Gamma} = 0$. Define $\boldsymbol{w}^- = \mathbf{grad}\,q \in \boldsymbol{X}_T(\Omega)$, with $\mathbf{curl}\,\boldsymbol{w}^- = 0$ and $\operatorname{div}\boldsymbol{w}^- = g \in L^2(\Omega)$. Then, set $\boldsymbol{w}' = \boldsymbol{w}^- - \sum_{1\le i\le I}\langle\boldsymbol{w}^-\cdot\boldsymbol{n}, 1\rangle_{\Sigma_i}\widetilde{\mathbf{grad}\,\dot{p}_i}$. By construction, the field $\boldsymbol{w}'$ belongs to $\boldsymbol{X}_T^{\Sigma}(\Omega)$, with $\mathbf{curl}\,\boldsymbol{w}' = 0$, $\operatorname{div}\boldsymbol{w}' = g$ in Ω. Using it in the variational formulation, one gets that $(\operatorname{div}\boldsymbol{w}|g) = 0$.
Let us prove next that $\mathbf{curl}\,\boldsymbol{w} = \boldsymbol{v}$ in Ω. By assumption, $\operatorname{div}\boldsymbol{v} = 0$ in Ω, so the vector field $\boldsymbol{f} := \mathbf{curl}\,\boldsymbol{w} - \boldsymbol{v}$ belongs to $\boldsymbol{H}(\operatorname{div},\Omega)$ with $\operatorname{div}\boldsymbol{f} = 0$ in Ω.
Remark that $\boldsymbol{D}(\Omega)$ is a subset of $\boldsymbol{X}_T(\Omega)$ but not of $\boldsymbol{X}_T^{\Sigma}(\Omega)$. However, as above, one can take $\boldsymbol{w}^- \in \boldsymbol{D}(\Omega)$ and build $\boldsymbol{w}' = \boldsymbol{w}^- - \sum_{1\le i\le I}\langle\boldsymbol{w}^-\cdot\boldsymbol{n}, 1\rangle_{\Sigma_i}\widetilde{\mathbf{grad}\,\dot{p}_i}$ with the same divergence and curl and use it as a test function:

$$\langle\mathbf{curl}\,\boldsymbol{f}, \boldsymbol{w}^-\rangle = (\boldsymbol{f}|\,\mathbf{curl}\,\boldsymbol{w}') = (\mathbf{curl}\,\boldsymbol{w}|\,\mathbf{curl}\,\boldsymbol{w}') - (\boldsymbol{v}|\,\mathbf{curl}\,\boldsymbol{w}') = 0.$$

Hence, $\mathbf{curl}\,\boldsymbol{f} = 0$ in Ω and, in particular, $\boldsymbol{f} \in \boldsymbol{H}(\mathbf{curl},\Omega)$.
To prove that $\boldsymbol{f} \in \boldsymbol{H}_0(\mathbf{curl},\Omega)$, that is $\boldsymbol{f}\times\boldsymbol{n} = 0$ in $\boldsymbol{H}^{-1/2}(\Gamma)$ (see Theorem 2.2.24), one has to check that $\langle\boldsymbol{f}\times\boldsymbol{n}, \boldsymbol{g}\rangle_{\boldsymbol{H}^{1/2}(\Gamma)} = 0$ for all $\boldsymbol{g} \in \boldsymbol{H}^1(\Omega)$.

[10] The form $(\boldsymbol{w},\boldsymbol{w}') \mapsto (\mathbf{curl}\,\boldsymbol{w}|\,\mathbf{curl}\,\boldsymbol{w}') + (\operatorname{div}\boldsymbol{w}|\operatorname{div}\boldsymbol{w}')$ is equal to the scalar product $(\cdot,\cdot)_{\boldsymbol{X}_T(\Omega)}$ on $\boldsymbol{X}_T^{\Sigma}(\Omega)$, so well-posedness stems from the Riesz Theorem 4.2.1.

[11] The problem is equivalent to the variational formulation

$$\begin{cases} \textit{Find } q \in H^1_{zmv}(\Omega) \textit{ such that} \\ \forall q' \in H^1_{zmv}(\Omega),\ (\mathbf{grad}\,q|\,\mathbf{grad}\,q') = -(g|q') \end{cases}.$$

This variational formulation is well-posed, cf. the Lax-Milgram Theorem 4.2.8 and the Poincaré-Wirtinger inequality of Theorem 2.1.37 in $H^1_{zmv}(\Omega_\ell)$.

With the help of the integration-by-parts formula (2.27) and bearing in mind that $\mathbf{curl}\,\boldsymbol{f} = 0$ in Ω, this amounts to checking that $(\boldsymbol{f}|\,\mathbf{curl}\,\boldsymbol{g}) = 0$ for all $\boldsymbol{g} \in \boldsymbol{H}^1(\Omega)$. For that, let $q \in H^1_{zmv}(\Omega)$ be the solution to the variational formulation

$$\begin{cases} \textit{Find } q \in H^1_{zmv}(\Omega) \textit{ such that} \\ \forall q' \in H^1_{zmv}(\Omega),\ (\mathbf{grad}\,q|\,\mathbf{grad}\,q') = (\boldsymbol{g}|\,\mathbf{grad}\,q') \end{cases}.$$

By construction, the field $\boldsymbol{w}^- := \boldsymbol{g} - \mathbf{grad}\,q \in \boldsymbol{L}^2(\Omega)$, with $\mathbf{curl}\,\boldsymbol{w}^- = \mathbf{curl}\,\boldsymbol{g}$ and $\operatorname{div}\boldsymbol{w}^- = 0$ in Ω, and $\boldsymbol{w}^- \cdot \boldsymbol{n} = 0$ on Γ. Once again, the field $\boldsymbol{w}' = \boldsymbol{w}^- - \sum_{1\le i\le I}\langle \boldsymbol{w}^- \cdot \boldsymbol{n}, 1\rangle_{\Sigma_i}\widetilde{\mathbf{grad}\,\dot{p}_i}$ can be used as a test function in the variational formulation to find

$$(\boldsymbol{f}|\,\mathbf{curl}\,\boldsymbol{g}) = (\boldsymbol{f}|\,\mathbf{curl}\,\boldsymbol{w}') = (\mathbf{curl}\,\boldsymbol{w}|\,\mathbf{curl}\,\boldsymbol{w}') - (\boldsymbol{v}|\,\mathbf{curl}\,\boldsymbol{w}') = 0.$$

Hence, $\boldsymbol{f}$ belongs to $\boldsymbol{Z}_N(\Omega)$. But we know from Remark 3.4.2 that $\langle \mathbf{curl}\,\boldsymbol{w} \cdot \boldsymbol{n}, 1\rangle_{H^{1/2}(\Gamma_k)} = 0$, for all k, so $\langle \boldsymbol{f}\cdot\boldsymbol{n}, 1\rangle_{H^{1/2}(\Gamma_k)} = 0$ follows again for all k by the assumption on $\boldsymbol{v}$. Due to Proposition 3.3.10, we have $\boldsymbol{f} = 0$, i.e., $\mathbf{curl}\,\boldsymbol{w} = \boldsymbol{v}$ in Ω.
Lastly, we know that $\|\boldsymbol{w}\|_{\boldsymbol{L}^2(\Omega)} \le C'_W\,\|\,\mathbf{curl}\,\boldsymbol{w}\|_{\boldsymbol{L}^2(\Omega)}$ by using the second Weber inequality, so we conclude that

$$\|\boldsymbol{w}\|_{\boldsymbol{L}^2(\Omega)} + \|\,\mathbf{curl}\,\boldsymbol{w}\|_{\boldsymbol{L}^2(\Omega)} \le (1 + C'_W)\,\|\boldsymbol{v}\|_{\boldsymbol{L}^2(\Omega)}.$$

■

On the other hand, one can prove a more precise result about the existence of $\boldsymbol{H}^1(\Omega)$ vector potentials. Namely, that one can choose them with vanishing normal trace. For that, we introduce a new family of domains, defined by Birman and Solomyak [50]. As particular cases, smooth domains, curved polyhedra and axisymmetric domains all belong to this new family.

Definition 3.6.3 *The domain Ω is said to be* of the $\mathfrak{A}$-type *if, for any $\boldsymbol{x} \in \partial\Omega$, there exists a neighbourhood $\mathcal{V}$ of $\boldsymbol{x}$ in $\mathbb{R}^3$, and C^2 diffeomorphism that transforms $\Omega \cap \mathcal{V}$ into one of the following types, where (x_1, x_2, x_3) denote the Cartesian coordinates and $(\rho, \varpi) \in \mathbb{R}^+ \times \mathbf{S}^2$ the spherical coordinates in $\mathbb{R}^3$:*

1. $[x_1 > 0]$, *i.e., $\boldsymbol{x}$ is a regular point;*
2. $[x_1 > 0,\ x_2 > 0]$, *i.e., $\boldsymbol{x}$ is a point on a* salient *(outward) edge;*
3. $\mathbb{R}^3 \setminus [x_1 \ge 0,\ x_2 \ge 0]$, *i.e., $\boldsymbol{x}$ is a point on a* reentrant *(inward) edge;*
4. $[\rho > 0,\ \varpi \in \tilde{\Omega}]$, *where $\tilde{\Omega} \subset \mathbf{S}^2$ is a topologically trivial domain. In particular, if $\partial\tilde{\Omega}$ is smooth, $\boldsymbol{x}$ is a* conical vertex*; if $\partial\tilde{\Omega}$ is made of arcs of great circles, $\boldsymbol{x}$ is a* polyhedral vertex.

In a domain of the $\mathfrak{A}$-type, one can match the normal traces of $\boldsymbol{H}^1(\Omega)$ vector fields with the traces of the normal derivative of $H^2(\Omega)$ scalar fields [50].

Lemma 3.6.4 *Let Ω be a domain of the $\mathfrak{A}$-type. For any $\boldsymbol{w} \in \boldsymbol{H}^1(\Omega)$, there exists $q \in H^2(\Omega)$ such that*

$$\frac{\partial q}{\partial n}_{|\Gamma} = \boldsymbol{w} \cdot \boldsymbol{n}_{|\Gamma} \quad \textit{and} \quad \|q\|_{H^2(\Omega)} \leq C \, \|\boldsymbol{w}\|_{\boldsymbol{H}^1(\Omega)},$$

where $C > 0$ is independent of $\boldsymbol{w}$.

Theorem 3.6.5 *Let Ω be a domain of the $\mathfrak{A}$-type. Then, given $\boldsymbol{v} \in \boldsymbol{L}^2(\Omega)$, it holds that*

$$\left.\begin{array}{l} \operatorname{div} \boldsymbol{v} = 0 \textit{ in } \Omega, \\ \langle \boldsymbol{v} \cdot \boldsymbol{n}, 1 \rangle_{H^{1/2}(\Gamma_k)} = 0, \ \forall k \end{array}\right\} \iff \left\{\begin{array}{l} \exists \boldsymbol{w} \in \boldsymbol{H}^1(\Omega), \\ \boldsymbol{w} \cdot \boldsymbol{n}_{|\Gamma} = 0, \end{array}\right. \boldsymbol{v} = \mathbf{curl}\, \boldsymbol{w}. \tag{3.12}$$

Furthermore, there exists $C > 0$ independent of $\boldsymbol{v}$ such that

$$\|\boldsymbol{w}\|_{\boldsymbol{H}^1(\Omega)} \leq C \, \|\boldsymbol{v}\|_{\boldsymbol{L}^2(\Omega)}.$$

Proof. Assume $\boldsymbol{v} = \mathbf{curl}\, \boldsymbol{w}$, with $\boldsymbol{w} \in \boldsymbol{H}^1(\Omega)$, and $\boldsymbol{w} \cdot \boldsymbol{n}_{|\Gamma} = 0$. Then, $\operatorname{div} \boldsymbol{v} = 0$, and it is proven as before that $\langle \boldsymbol{v} \cdot \boldsymbol{n}, 1 \rangle_{H^{1/2}(\Gamma_k)} = 0$, for $0 \leq k \leq K$.
Conversely, we know from Theorem 3.4.1 that there exists $\boldsymbol{y} \in \boldsymbol{H}^1(\Omega)$ such that $\boldsymbol{v} = \mathbf{curl}\, \boldsymbol{y}$. Then, according to Lemma 3.6.4, one can build $q \in H^2(\Omega)$ such that $\partial_n q = \boldsymbol{y} \cdot \boldsymbol{n}$ on Γ. Therefore, $\boldsymbol{w} = \boldsymbol{y} - \mathbf{grad}\, q$ is a vector potential that belongs to $\boldsymbol{H}^1(\Omega)$, with $\boldsymbol{w} \cdot \boldsymbol{n}_{|\Gamma} = 0$. Moreover, the bound on the $H^1(\Omega)$-norm of $\boldsymbol{w}$ stems from the bounds on $\|\boldsymbol{y}\|_{\boldsymbol{H}^1(\Omega)}$ and $\|q\|_{H^2(\Omega)}$.

If we assume that Ω is topologically trivial, then, for divergence-free fields with vanishing normal trace, one can propose vector potentials that belong to $\boldsymbol{H}^1_0(\Omega)$.

Theorem 3.6.6 *Let Ω be a topologically trivial domain. Then, given $\boldsymbol{v} \in \boldsymbol{L}^2(\Omega)$, it holds that*

$$\left.\begin{array}{l} \operatorname{div} \boldsymbol{v} = 0 \textit{ in } \Omega, \\ \boldsymbol{v} \cdot \boldsymbol{n}_{|\Gamma} = 0 \end{array}\right\} \iff \exists \boldsymbol{w} \in \boldsymbol{H}^1_0(\Omega), \ \boldsymbol{v} = \mathbf{curl}\, \boldsymbol{w}.$$

Furthermore, there exists $C > 0$ independent of $\boldsymbol{v}$ such that

$$\|\boldsymbol{w}\|_{\boldsymbol{H}^1(\Omega)} \leq C \, \|\boldsymbol{v}\|_{\boldsymbol{L}^2(\Omega)}.$$

Proof. Let $\boldsymbol{v}$ be an element of $\boldsymbol{H}_0(\operatorname{div}, \Omega)$ such that $\operatorname{div} \boldsymbol{v} = 0$ in Ω.
Define $\bar{\boldsymbol{v}}$ as its continuation by zero to $\mathcal{O}$. Then, according to Proposition 2.2.30, one has $\bar{\boldsymbol{v}} \in \boldsymbol{H}(\operatorname{div}, \mathcal{O})$, and moreover $\operatorname{div} \bar{\boldsymbol{v}} = 0$ in $\mathcal{O}$. Now, according to Theorem 3.4.1, there exists a vector potential $\bar{\boldsymbol{y}} \in \boldsymbol{H}^1(\mathcal{O})$ such that $\bar{\boldsymbol{v}} = \mathbf{curl}\, \bar{\boldsymbol{y}}$ in $\mathcal{O}$ and $\|\bar{\boldsymbol{y}}\|_{\boldsymbol{H}^1(\mathcal{O})} \leq C \, \|\bar{\boldsymbol{v}}\|_{\boldsymbol{L}^2(\bar{\boldsymbol{y}})}$ with $C > 0$ independent of $\bar{\boldsymbol{v}}$.
Next, we further define $\boldsymbol{y}'$ as the restriction of $\bar{\boldsymbol{y}}$ to $\mathcal{O} \setminus \overline{\Omega}$: one has $\mathbf{curl}\, \boldsymbol{y}' = 0$. By assumption, Ω, and as a consequence, $\mathcal{O} \setminus \overline{\Omega}$, are topologically trivial. Therefore, thanks to Theorem 3.3.1 applied to each connected subset Ω_k, $0 \leq k \leq K$, of $\mathcal{O} \setminus \overline{\Omega}$, there exists a scalar potential q' in $H^1(\mathcal{O} \setminus \overline{\Omega})$ such that $\boldsymbol{y}' = \mathbf{grad}\, q'$ in $\mathcal{O} \setminus \overline{\Omega}$. But $\boldsymbol{y}'$ is in $\boldsymbol{H}^1(\mathcal{O} \setminus \overline{\Omega})$, so q' belongs to $H^2(\mathcal{O} \setminus \overline{\Omega})$. It is then possible to define a continuation $\bar{q}$ of q' to $\mathcal{O}$, with $\bar{q} \in H^2(\mathcal{O})$ (see

Proposition 2.1.31).
In $\mathcal{O}$, we set $\bar{\boldsymbol{w}} = \bar{\boldsymbol{y}} - \mathbf{grad}\,\bar{q}$, which is an element of $\boldsymbol{H}^1(\mathcal{O})$. Also, $\bar{\boldsymbol{w}}_{|\mathcal{O}\setminus\overline{\Omega}} = 0$, so its restriction $\boldsymbol{w}$ to Ω belongs to $\boldsymbol{H}^1_0(\Omega)$. And, by construction, $\mathbf{curl}\,\boldsymbol{w} = \mathbf{curl}\,\boldsymbol{y} = \boldsymbol{v}$ in Ω, which proves the claim if one recalls that continuation and restriction are continuous mappings. ■

Let us conclude with continuous splittings of fields of $\boldsymbol{H}_0(\mathbf{curl},\Omega)$ or $\boldsymbol{H}(\mathbf{curl},\Omega)$ in an $\boldsymbol{H}^1(\Omega)$ field with a vanishing boundary condition, plus the gradient of an $H^1(\Omega)$ potential.

Theorem 3.6.7 *Let Ω be a domain. Then, given $\boldsymbol{y} \in \boldsymbol{H}_0(\mathbf{curl},\Omega)$, there exists $(\boldsymbol{y}^{reg}, r) \in \boldsymbol{H}^1(\Omega) \times H^1(\Omega)$ such that*

$$\boldsymbol{y} = \boldsymbol{y}^{reg} + \mathbf{grad}\,r, \text{ and } \boldsymbol{y}^{reg} \times \boldsymbol{n}_{|\Gamma} = 0,\ r_{|\Gamma} = 0.$$

Assume further that Ω is of the $\mathfrak{A}$-type. Then, given $\boldsymbol{y} \in \boldsymbol{H}(\mathbf{curl},\Omega)$, there exists $(\boldsymbol{y}^{reg}, r) \in \boldsymbol{H}^1(\Omega) \times H^1(\Omega)$ such that

$$\boldsymbol{y} = \boldsymbol{y}^{reg} + \mathbf{grad}\,r, \text{ and } \boldsymbol{y}^{reg} \cdot \boldsymbol{n}_{|\Gamma} = 0.$$

In both cases, there exists $C > 0$ independent of $\boldsymbol{y}$ such that

$$\|\boldsymbol{y}^{reg}\|_{\boldsymbol{H}^1(\Omega)} + \|r\|_{H^1(\Omega)} \le C\,\|\boldsymbol{y}\|_{\boldsymbol{H}(\mathbf{curl},\Omega)}.$$

Proof. Let $\boldsymbol{y}$ be an element of $\boldsymbol{H}_0(\mathbf{curl},\Omega)$. Below, $C > 0$ generically denote constants that are independent of $\boldsymbol{y}$.
Define $\bar{\boldsymbol{y}}$ as its continuation by zero to $\mathcal{O}$. According to Proposition 2.2.32, one has $\bar{\boldsymbol{y}} \in \boldsymbol{H}_0(\mathbf{curl},\mathcal{O})$, with $\|\bar{\boldsymbol{y}}\|_{\boldsymbol{H}(\mathbf{curl},\mathcal{O})} = \|\boldsymbol{y}\|_{\boldsymbol{H}(\mathbf{curl},\Omega)}$. In particular, $\bar{\boldsymbol{v}} = \mathbf{curl}\,\bar{\boldsymbol{y}}$ belongs to $\boldsymbol{H}_0(\mathrm{div},\Omega)$, with $\mathrm{div}\,\bar{\boldsymbol{v}} = 0$ in $\mathcal{O}$. Due to Theorem 3.4.1 ($\partial\mathcal{O}$ is connected), there exists $\bar{\boldsymbol{w}} \in \boldsymbol{H}^1(\mathcal{O})$ such that $\bar{\boldsymbol{v}} = \mathbf{curl}\,\bar{\boldsymbol{w}}$ in $\mathcal{O}$, with $\|\bar{\boldsymbol{w}}\|_{\boldsymbol{H}^1(\mathcal{O})} \le C\,\|\boldsymbol{y}\|_{\boldsymbol{H}(\mathbf{curl},\Omega)}$.
Then, the field $\bar{\boldsymbol{z}} = \bar{\boldsymbol{y}} - \bar{\boldsymbol{w}}$ belongs to $\boldsymbol{H}(\mathbf{curl},\mathcal{O})$, with $\mathbf{curl}\,\bar{\boldsymbol{z}} = 0$ in $\mathcal{O}$. Due to Theorem 3.3.1 ($\mathcal{O}$ is topologically trivial), there exists $\bar{p} \in H^1(\mathcal{O})$ such that $\bar{\boldsymbol{z}} = \mathbf{grad}\,\bar{p}$ in $\mathcal{O}$, with $\|\bar{p}\|_{H^1(\mathcal{O})} \le C\,\|\boldsymbol{y}\|_{\boldsymbol{H}(\mathbf{curl},\Omega)}$.
By construction, one has $\bar{\boldsymbol{y}} = \bar{\boldsymbol{w}} + \mathbf{grad}\,\bar{p}$ in $\mathcal{O}$. Recall that $\bar{\boldsymbol{y}} = 0$ in $\mathcal{O}\setminus\overline{\Omega}$, so it follows that $\mathbf{grad}\,\bar{p} = -\bar{\boldsymbol{w}}$ in $\mathcal{O}\setminus\overline{\Omega}$, and as a consequence, $\bar{p}_{|\mathcal{O}\setminus\overline{\Omega}} \in H^2(\mathcal{O}\setminus\overline{\Omega})$. One can define a continuation $\bar{q}$ of $\bar{p}_{|\mathcal{O}\setminus\overline{\Omega}}$ that belongs to $H^2(\mathcal{O})$, and in addition, $\|\bar{q}\|_{H^2(\mathcal{O})} \le C\,\{\|\bar{p}\|_{H^1(\mathcal{O}\setminus\overline{\Omega})} + |\bar{p}|_{H^2(\mathcal{O}\setminus\overline{\Omega})})\} \le C\,\|\boldsymbol{y}\|_{\boldsymbol{H}(\mathbf{curl},\Omega)}$.
Introducing $\bar{r} = \bar{p} - \bar{q} \in H^1(\mathcal{O})$, one has $\bar{r} = 0$ in $\mathcal{O}\setminus\overline{\Omega}$, so $r = \bar{r}_{|\Omega} \in H^1_0(\Omega)$, with $\|r\|_{H^1(\Omega)} \le C\,\|\boldsymbol{y}\|_{\boldsymbol{H}(\mathbf{curl},\Omega)}$. On the other hand, $\bar{\boldsymbol{w}} + \mathbf{grad}\,\bar{q} \in \boldsymbol{H}^1(\mathcal{O})$, so $\boldsymbol{y}^{reg} = (\bar{\boldsymbol{w}} + \mathbf{grad}\,\bar{q})_{|\Omega} \in \boldsymbol{H}^1(\Omega)$, with $\|\boldsymbol{y}^{reg}\|_{\boldsymbol{H}^1(\Omega)} \le C\,\|\boldsymbol{y}\|_{\boldsymbol{H}(\mathbf{curl},\Omega)}$. Moreover, one has, in Ω,

$$\boldsymbol{y}^{reg} + \mathbf{grad}\,r = (\bar{\boldsymbol{w}} + \mathbf{grad}\,\bar{p})_{|\Omega} = \boldsymbol{y},$$

so that $\boldsymbol{y}^{reg} \in \boldsymbol{H}_0(\mathbf{curl},\Omega)$, which proves the first claim.

Let $\boldsymbol{y}$ be an element of $\boldsymbol{H}(\mathbf{curl}, \Omega)$. Below, $C > 0$ again denotes constants that are independent of $\boldsymbol{y}$. Some parts of the proof are identical, so they are only sketched.
Define $\bar{\boldsymbol{y}}$ as a continuation of $\boldsymbol{y}$ to $\mathcal{O}$ such that $\|\bar{\boldsymbol{y}}\|_{\boldsymbol{H}(\mathbf{curl},\mathcal{O})} \leq C \|\boldsymbol{y}\|_{\boldsymbol{H}(\mathbf{curl},\Omega)}$ and $\bar{\boldsymbol{y}} \in \boldsymbol{H}_0(\mathbf{curl}, \mathcal{O})$ (cf. Proposition 2.2.8 and Remark 2.2.9). Let $\bar{\boldsymbol{v}} = \mathbf{curl}\, \bar{\boldsymbol{y}} \in \boldsymbol{H}_0(\mathrm{div}, \Omega)$, with $\mathrm{div}\, \bar{\boldsymbol{v}} = 0$ in $\mathcal{O}$. As above, there exists $\bar{\boldsymbol{w}} \in \boldsymbol{H}^1(\mathcal{O})$ such that $\bar{\boldsymbol{v}} = \mathbf{curl}\, \bar{\boldsymbol{w}}$ in $\mathcal{O}$, with $\|\bar{\boldsymbol{w}}\|_{\boldsymbol{H}^1(\mathcal{O})} \leq C \|\boldsymbol{y}\|_{\boldsymbol{H}(\mathbf{curl},\Omega)}$. The field $\bar{\boldsymbol{y}} - \bar{\boldsymbol{w}}$ is curl-free in $\mathcal{O}$, so there exists $\bar{p} \in H^1(\mathcal{O})$ such that $\bar{\boldsymbol{y}} - \bar{\boldsymbol{w}} = \mathbf{grad}\, \bar{p}$ in $\mathcal{O}$, with $\|\bar{p}\|_{H^1(\mathcal{O})} \leq C \|\boldsymbol{y}\|_{\boldsymbol{H}(\mathbf{curl},\Omega)}$. Clearly, one has $\bar{\boldsymbol{y}} = \bar{\boldsymbol{w}} + \mathbf{grad}\, \bar{p}$ in $\mathcal{O}$.
Let $\boldsymbol{w} = \bar{\boldsymbol{w}}_{|\Omega}$. According to Lemma 3.6.4 (Ω is of the $\mathfrak{A}$-type), there exists $q \in H^2(\Omega)$ such that $\partial_n q_{|\Gamma} = \boldsymbol{w} \cdot \boldsymbol{n}_{|\Gamma}$, and $\|q\|_{H^2(\Omega)} \leq C \|\boldsymbol{y}\|_{\boldsymbol{H}(\mathbf{curl},\Omega)}$.
Introducing $r = \bar{p}_{|\Omega} + q \in H^1(\Omega)$, one has $\|r\|_{H^1(\Omega)} \leq C \|\boldsymbol{y}\|_{\boldsymbol{H}(\mathbf{curl},\Omega)}$. On the other hand, $\boldsymbol{y}^{reg} = \boldsymbol{w} + \mathbf{grad}\, q \in \boldsymbol{H}^1(\Omega)$, with $\|\boldsymbol{y}^{reg}\|_{\boldsymbol{H}^1(\Omega)} \leq C \|\boldsymbol{y}\|_{\boldsymbol{H}(\mathbf{curl},\Omega)}$ and $\boldsymbol{y}^{reg} \cdot \boldsymbol{n}_{|\Gamma} = 0$. Finally, one has, by construction,

$$\boldsymbol{y} = \boldsymbol{y}^{reg} + \mathbf{grad}\, r \text{ in } \Omega.$$

■

3.7 Helmholtz decompositions

In a domain Ω, we introduce a general principle of decomposition of vector fields into a gradient part and a divergence-free part. This decomposition enjoys a fundamental property of double orthogonality, i.e., orthogonality with respect to both the $\boldsymbol{L}^2(\Omega)$ and $\boldsymbol{H}(\mathbf{curl}, \Omega)$ scalar products.

Proposition 3.7.1 (First Helmholtz decomposition) *Let Ω be a domain. The following decomposition of the space $\boldsymbol{L}^2(\Omega)$ holds:*

$$\boldsymbol{L}^2(\Omega) = \mathbf{grad}\, H_0^1(\Omega) \overset{\perp}{\oplus} \boldsymbol{H}(\mathrm{div}\, 0, \Omega).$$

Proof. Let $\boldsymbol{v} \in \boldsymbol{L}^2(\Omega)$. Let $q_{\boldsymbol{v}} \in H_0^1(\Omega)$ be such that $\Delta q_{\boldsymbol{v}} = \mathrm{div}\, \boldsymbol{v}$ in Ω (cf. Proposition 3.3.6). Then, set $\boldsymbol{v}^L = \mathbf{grad}\, q_{\boldsymbol{v}} \in \boldsymbol{L}^2(\Omega)$ and $\boldsymbol{v}^T = \boldsymbol{v} - \boldsymbol{v}^L$. Obviously, $\boldsymbol{v}^T \in \boldsymbol{L}^2(\Omega)$ and $\mathrm{div}\, \boldsymbol{v}^T = \mathrm{div}\, \boldsymbol{v} - \Delta q_{\boldsymbol{v}} = 0$ in Ω, i.e., $\boldsymbol{v}^T \in \boldsymbol{H}(\mathrm{div}\, 0, \Omega)$. As $\boldsymbol{v}$ is arbitrary, we have proven that

$$\boldsymbol{L}^2(\Omega) \subset \mathbf{grad}\, H_0^1(\Omega) + \boldsymbol{H}(\mathrm{div}\, 0, \Omega)\,;$$

the converse inclusion is obvious.
To check that the sum is orthogonal (hence direct), consider $\boldsymbol{v} = \mathbf{grad}\, q$ with $q \in H_0^1(\Omega)$, and $\boldsymbol{w} \in \boldsymbol{H}(\mathrm{div}\, 0, \Omega)$. Using the integration-by-parts formula (2.25), one finds $(\boldsymbol{v}|\boldsymbol{w}) = 0$. ■

Let us define the function space $\boldsymbol{K}_N(\Omega)$

$$\boldsymbol{K}_N(\Omega) := \boldsymbol{H}_0(\mathbf{curl}, \Omega) \cap \boldsymbol{H}(\mathrm{div}\, 0, \Omega).$$

As a side-product of Proposition 3.7.1, one easily obtains the orthogonal decomposition for fields with a vanishing tangential trace.

Proposition 3.7.2 *Let Ω be a domain. The following decomposition of the space $\boldsymbol{H}_0(\mathbf{curl}, \Omega)$ holds:*

$$\boldsymbol{H}_0(\mathbf{curl}, \Omega) = \mathbf{grad}\, H_0^1(\Omega) \overset{\perp}{\oplus} \boldsymbol{K}_N(\Omega).$$

One can also determine analogous orthogonal decompositions that now involve fields with a vanishing normal trace.

Proposition 3.7.3 (Second Helmholtz decomposition) *Let Ω be a domain. The following decomposition of the space $\boldsymbol{L}^2(\Omega)$ holds:*

$$\boldsymbol{L}^2(\Omega) = \mathbf{grad}\, H^1_{zmv}(\Omega) \overset{\perp}{\oplus} \boldsymbol{H}_0(\operatorname{div} 0, \Omega).$$

Proof. For $\boldsymbol{v} \in \boldsymbol{L}^2(\Omega)$, let $q_{\boldsymbol{v}} \in H^1_{zmv}(\Omega)$ be governed by

$$\begin{cases} \textit{Find } q_{\boldsymbol{v}} \in H^1_{zmv}(\Omega) \textit{ such that} \\ \forall q \in H^1_{zmv}(\Omega),\ (\mathbf{grad}\, q_{\boldsymbol{v}} | \mathbf{grad}\, q) = (\boldsymbol{v} | \mathbf{grad}\, q) \end{cases}.$$

According to footnote[9] p. 128, $q_{\boldsymbol{v}}$ is uniquely defined, and moreover, if one lets $\boldsymbol{v}^L = \mathbf{grad}\, q_{\boldsymbol{v}} \in \boldsymbol{L}^2(\Omega)$, the difference $\boldsymbol{v}^T = \boldsymbol{v} - \boldsymbol{v}^L$ belongs to $\boldsymbol{H}_0(\operatorname{div} 0, \Omega)$. Hence, we find

$$\boldsymbol{L}^2(\Omega) \subset \mathbf{grad}\, H^1_{zmv}(\Omega) + \boldsymbol{H}_0(\operatorname{div} 0, \Omega)\,;$$

the converse inclusion is obvious. Furthermore, the sum is orthogonal (use the integration-by-parts formula (2.25)), which ends the proof. ■

Let us define now the function space $\boldsymbol{K}_T(\Omega)$

$$\boldsymbol{K}_T(\Omega) := \boldsymbol{H}(\mathbf{curl}, \Omega) \cap \boldsymbol{H}_0(\operatorname{div} 0, \Omega).$$

As a side-product of Proposition 3.7.3, one obtains the second orthogonal decomposition below.

Proposition 3.7.4 *Let Ω be a domain. The following decomposition of the space $\boldsymbol{H}(\mathbf{curl}, \Omega)$ holds:*

$$\boldsymbol{H}(\mathbf{curl}, \Omega) = \mathbf{grad}\, H^1_{zmw}(\Omega) \overset{\perp}{\oplus} \boldsymbol{K}_T(\Omega).$$

4

Abstract mathematical framework

We first introduce basic notions on Banach and Hilbert spaces. Afterwards, we recall some well-known results, which help prove the well-posedness of the various sets of equations we study throughout this book. Unless otherwise specified, the proofs of these classic results can be found in [158, 209, 63, 93]. By well-posedness, it is usually understood that the problem admits one, and only one, solution, which depends continuously on the data. In the case of linear problems, the continuity property amounts to proving that the norm of the solution is bounded by a constant, times the norm of the data. The crucial point is that the norm, that measures the solution, and the norm, that measures the data, have to be chosen carefully, in order to derive the *ad hoc* constant. Particular attention is paid to problems whose formulation includes *constraints* on the solution.

4.1 Basic Results

To begin with, let us recall some familiar notions regarding topological, separable, Banach or Hilbert vector spaces (over $\mathbb{C}$), and (anti)linear mappings. All notions are easily extended to vector spaces over $\mathbb{R}$, and linear mappings. By definition, a topological space is separable if it contains a countable dense subset; a Banach space is a complete vector space with a norm; a Hilbert space is a vector space endowed with a *scalar product*, which is complete with respect to the norm induced by the scalar product.[1]

[1] In a vector space, a scalar product $(\cdot,\cdot)$ exhibits the following properties:

- It is *linear* with respect to the first variable:
  $\forall a_1, a_2 \in \mathbb{C},\ \forall v_1, v_2, w \in V,\ (a_1 v_1 + a_2 v_2, w) = a_1(v_1, w) + a_2(v_2, w)$.
- It is *antilinear* with respect to the second variable:
  $\forall a_1, a_2 \in \mathbb{C},\ \forall v, w_1, w_2 \in V,\ (v, a_1 w_1 + a_2 w_2) = \overline{a_1}(v, w_1) + \overline{a_2}(v, w_2)$.
- It is *Hermitian*:
  $\forall v, w \in V,\ (v, w) = \overline{(w, v)}$.

Let X be a Banach space (with norm $\|\cdot\|_X$). Throughout this chapter, I_X denotes the identity mapping in X and, given Z as a vector subspace of X, $i_{Z\to X}$ denotes the canonical imbedding of Z in X. Let Y be a second Banach space (with norm $\|\cdot\|_Y$), and let A be a linear mapping $A : x \mapsto Ax$ defined on $D(A)$, a vector subspace of X, with values in Y. Its kernel (respectively range) is denoted by $\ker(A)$ (respectively $R(A)$).
We have the following incremental definitions and notations (cf. [209, 63]).

Definition 4.1.1 – *The linear mapping A is called an* unbounded operator*.*
– *The subspace $D(A)$ is called the* domain *of the unbounded operator A.*
– *The unbounded operator A is* continuous *if*

$$\exists C > 0,\ \forall x \in D(A),\ \|Ax\|_Y \le C\,\|x\|_X.$$

– *A continuous unbounded operator A with domain $D(A)$ equal to X is called a* bounded operator*. The space of all bounded operators from X to Y is denoted by $\mathcal{L}(X,Y)$, with operator norm*

$$|||A|||_{\mathcal{L}(X,Y)} = \sup_{x\in X\setminus\{0\}} \frac{\|Ax\|_Y}{\|x\|_X}.$$

When $X = Y$, one uses the notation $\mathcal{L}(X)$, instead of $\mathcal{L}(X,X)$.
– *A bounded operator A is a* Fredohlm operator *if* $\dim(\ker(A)) < \infty$*, $R(A)$ is closed and* $\operatorname{codim}(R(A)) < \infty$*. In this case, its* index *is equal to* $\dim(\ker(A)) - \operatorname{codim}(R(A))$*.*
– *A bounded bijective operator with a bounded inverse is called an* isomorphism*.*
– *An unbounded operator A is* closed *if its graph*

$$G(A) = \{(x, Ax)\ :\ x \in D(A)\}$$

is closed in $X \times Y$.
– *A bounded operator A is* compact *if the closure of the image by A of the unit ball $B_X(O,1) = \{x \in X\ :\ \|x\|_X \le 1\}$ is compact in Y.*

Once the basic results are recalled, we will often write "operator" instead of "unbounded operator".

In practical situations, one usually proves closedness or compactness as follows. An unbounded operator $A\ :\ X \to Y$ with domain $D(A)$ is closed provided that, for any sequence $(x_k)_k$ of elements of $D(A)$ such that $x_k \to x$ in X and $Ax_k \to y$ in Y, one has both $x \in D(A)$ and $y = Ax$. On the other

- It is *positive-definite*:
  $\forall v \in V \setminus \{0\},\ (v,v) > 0.$

  Then, $\|v\|\ :\ V \to \mathbb{R}$, defined by $\|v\| = (v,v)^{1/2}$, is a norm on V. Furthermore, the Cauchy-Schwarz inequality holds: $\forall v, w \in V,\ |(v,w)| \le \|v\|\,\|w\|$.

hand, a bounded operator $A \in \mathcal{L}(X,Y)$ is compact, provided that, for any bounded sequence $(x_k)_k$ of elements of X, one can extract a subsequence of $(Ax_k)_k$ that converges in Y.

Proposition 4.1.2 *The vector subspace of compact operators is closed in $\mathcal{L}(X,Y)$ with respect to the norm $|||\cdot|||_{\mathcal{L}(X,Y)}$.*
Let Z be a third Banach space, and let $A \in \mathcal{L}(X,Y)$ and $B \in \mathcal{L}(Y,Z)$. Then, $B \circ A \in \mathcal{L}(X,Z)$. In addition, if A or B is compact, then $B \circ A$ is also compact.

Theorem 4.1.3 `(closed graph)` *Let A be a closed unbounded operator with domain equal to X ; then, A is a bounded operator.*

Theorem 4.1.4 `(Banach-Schauder, or open mapping)` *Let A be a bounded, bijective, operator from X to Y ; then, its inverse A^{-1} is a bounded operator from Y to X.*

Next, let us introduce a useful norm.

Definition 4.1.5 *Given an unbounded operator A, the norm defined by*

$$\forall v \in D(A),\ \|v\|_{D(A)} = \left(\|v\|_X^2 + \|Av\|_Y^2\right)^{1/2},$$

is called the graph norm.

When the operator is bounded, $\|\cdot\|_{D(A)}$ is equivalent to $\|\cdot\|_X$ on X.

Let us then consider the spectrum of a bounded operator.[2]

Definition 4.1.6 *Let $A \in \mathcal{L}(X)$.*
– *Its* resolvent *is $\rho(A) = \{\lambda \in \mathbb{C}\ :\ (A - \lambda I_X)$ is bijective$\}$.*
– *Its* spectrum *is $\sigma(A) = \mathbb{C} \setminus \rho(A)$.*
– *Its* point spectrum *is $Eig(A) = \{\lambda \in \sigma(A)\ :\ \ker(A - \lambda I_X) \neq \{0\}\}$.*
An element λ of $Eig(A)$ is called an eigenvalue *of A. The vector space $E_\lambda(A) = \ker(A - \lambda I_X)$ is the corresponding* eigenspace. *Non-zero elements of $E_\lambda(A)$ are called* eigenvectors. *The* geometric multiplicity *of λ is equal to $\dim(E_\lambda(A))$, and its* ascent *is the smallest integer α such that $\ker(A - \lambda I_X)^{\alpha+1} = \ker(A - \lambda I_X)^\alpha$. The vector space $R_\lambda(A) = \ker(A - \lambda I_X)^\alpha$ is the corresponding* generalized eigenspace. *Non-zero elements of $R_\lambda(A)$ are called* generalized eigenvectors. *The* algebraic multiplicity *of λ is equal to $\dim(R_\lambda(A))$.*

[2] More generally, one may define the resolvent and spectrum of an unbounded operator A from $D(A) \subset X$ to X. In this case, the *resolvent* is

$$\rho(A) = \{\lambda \in \mathbb{C}\ :\ (A - \lambda I_X)(D(A)) \text{ is dense in } X\,;\ (A - \lambda I_X)^{-1} \text{ exists and is continuous from } (A - \lambda I_X)(D(A)) \text{ to } X\}\,;$$

the *spectrum* is $\sigma(A) = \mathbb{C} \setminus \rho(A)$, and it can further be decomposed into the disjoint union of the *point spectrum*, the *continuous spectrum* and the *residual spectrum* (see [94, Chapter VIII, §1] for details). As a rule, the notions of a continuous or residual spectrum will not be needed for the study of operators in this book.

By definition, for a given eigenvalue, its geometric multiplicity is lower than, or equal to, its algebraic multiplicity. Specifically, let us recall some results on the spectrum of compact operators.[3]

Theorem 4.1.7 *Let $A \in \mathcal{L}(X)$ be a compact operator. Then:*
– The spectrum $\sigma(A)$ is countable.
– $0 \in \sigma(A)$ (it is assumed here that $\dim(X) = \infty$).
– $\sigma(A) \setminus \{0\} = Eig(A) \setminus \{0\}$ (all non-zero elements of the spectrum are eigenvalues).
– The multiplicities of all non-zero eigenvalues are finite.
Furthermore, one of the following (exclusive) assertions holds:
- *$\sigma(A) = \{0\}$,*
- *$\sigma(A) \setminus \{0\}$ is finite,*
- *$\sigma(A) \setminus \{0\}$ is a sequence whose limit is 0.*

Let us turn our attention to Hilbert spaces. Let V be a Hilbert space, with scalar product $(\cdot,\cdot)_V$ and associated norm $\|\cdot\|_V$. Recall that its dual space[4] V' is the space of continuous *antilinear* forms on V, endowed with the norm

$$\|f\|_{V'} = \sup_{v \in V \setminus \{0\}} \frac{|\langle f, v\rangle_V|}{\|v\|_V}.$$

Above, $\langle f, v\rangle_V$ denotes the action of f on v. Whenever it is clear from the context, we denote it simply by $\langle f, v\rangle$.

Definition 4.1.8 *A bounded operator $A \in \mathcal{L}(V)$ is* positive *if*

$$\forall v \in V,\ (Av, v)_V \geq 0.$$

A bounded operator $A \in \mathcal{L}(V)$ is positive-definite *if*

$$\forall v \in V \setminus \{0\},\ (Av, v)_V > 0.$$

If a bounded operator is positive-definite, then its kernel reduces to $\{0\}$.

Definition 4.1.9 *Let A be an unbounded operator of V with domain $D(A)$. It is said to be* monotone *if*

$$\forall v \in D(A),\ (Av, v)_V \geq 0.$$

It is said to be maximal monotone *if:*

[3] Some of these results are consequences of the Fredholm alternative, which we choose to state hereafter within the framework of Hilbert spaces.

[4] V' can also be called the antidual space. We choose the denomination dual space, which also applies for vector spaces defined over $\mathbb{R}$, and continuous linear forms. Given $v \in V$, $f_v : w \mapsto (v, w)_V$ defines an element of V'. According to the Riesz Theorem 4.2.1 below, $v \mapsto f_v$ is a bijective isometry from V to V'. In addition, V' can be made into a Hilbert space by defining its scalar product via $(f_v, f_w)_{V'} = (v, w)_V$, for all $v, w \in V$.

(i) it is monotone;
(ii)$i_{D(A)\to V} + A$ *is surjective from* $D(A)$ *to* V.

Definition 4.1.10 *An unbounded operator* $A : D(A) \to V$ *is* symmetric *if*

$$\forall v, w \in D(A),\ (Av, w)_V = (v, Aw)_V.$$

Let W be a second Hilbert space.

Definition 4.1.11 *Let* $A : D(A) \to W$ *be an unbounded operator with a dense domain in* V. *Its* adjoint *is the unbounded operator* $A^* : D(A^*) \to V$, *with*

$$D(A^*) = \{w \in W\ :\ \exists v \in V,\ \forall v' \in D(A),\ (w, Av')_W = (v, v')_V\},\ \text{and } A^*w = v.$$

Definition 4.1.12 *Let* $A : D(A) \to V$ *be an unbounded operator with a dense domain in* V. *It is* self-adjoint *if* $A = A^*$. *It is* skew-adjoint *if* $A = -A^*$.

There are several possibilities for proving that an operator is self-adjoint.

Proposition 4.1.13 *Let* $A \in \mathcal{L}(V)$. *Then,* A *is self-adjoint if, and only if, it is symmetric.*

Proposition 4.1.14 *Let* $A : D(A) \to V$ *be a maximal monotone unbounded operator. Then,* A *is self-adjoint if, and only if, it is symmetric.*

This last result is often used in conjunction with the next one.

Proposition 4.1.15 *Let* $A : D(A) \to V$ *be an unbounded operator. Then,* A *is maximal monotone if, and only if,* A *is closed with a dense domain, and* A *and* A^* *are monotone.*

We also have an alternative characterisation of compact operators in terms of *weakly convergent* sequences.

Definition 4.1.16 `(weak convergence)` *A sequence* $(v_k)_{k\geq 0}$ *of elements of* V *is* weakly convergent *if*

$$\exists v \in V,\ \forall w \in V,\ \lim_{k\to\infty} (v_k, w)_V = (v, w)_V.$$

One writes $v_k \rightharpoonup v$ *in* V.

Proposition 4.1.17 *Let* $A \in \mathcal{L}(V, W)$. *Then, given elements* $(v_k)_{k\geq 0}$ *and* v *of* V, $v_k \rightharpoonup v$ *in* V *implies* $Av_k \rightharpoonup Av$ *in* W.
Moreover, A *is compact if, and only if,*

$$\forall (v_k)_{k\geq 0}, v \in V,\ v_k \rightharpoonup v \text{ in } V \implies \lim_{k\to\infty} Av_k = Av \text{ in } W.$$

Let us now state an important result in regard to compact operators.

Theorem 4.1.18 *Let $A \in \mathcal{L}(V)$ be a compact operator. Then,*
– $\ker(I_V - A)$ *is a finite-dimensional vector space.*
– $R(I_V - A)$ *is closed; more precisely,* $R(I_V - A) = (\ker(I_V - A^*))^\perp$.
– $\ker(I_V - A) = \{0\} \iff R(I_V - A) = V$.
– $\dim(\ker(I_V - A)) = \dim(\ker(I_V - A^*))$.

Evidently, given $\lambda \in \mathbb{C} \setminus \{0\}$, one can replace I_V with λI_V in the above Theorem; in particular, $\lambda I_V - A$ is a Fredholm operator. It follows that the multiplicities of any non-zero eigenvalue λ of a compact operator are finite: $0 < \dim(E_\lambda(A)) \leq \dim(R_\lambda(A)) < \infty$ (whereas $0 \leq \dim(E_0(A)) \leq \infty$).

Also, it allows one to solve the following classical problem.
Let $A \in \mathcal{L}(V)$, $\lambda \in \mathbb{C}$ and $f \in V$,

$$\begin{cases} \textit{Find } u \in V \textit{ such that} \\ \lambda u - Au = f. \end{cases} \tag{4.1}$$

According to Theorem 4.1.18, one can simply prove the following result when the operator is compact.

Corollary 4.1.19 `(Fredholm alternative)` *Let $A \in \mathcal{L}(V)$ be a compact operator and $\lambda \in \mathbb{C} \setminus \{0\}$. Then:*
– *either, for all $f \in V$, Problem (4.1) has one, and only one, solution u;*
– *or, the homogeneous equation $\lambda u - Au = 0$ has $n_\lambda > 0$ linearly independent solutions. In this case, given $f \in V$, Problem (4.1) has solutions if, and only if, f satisfies n_λ orthogonality conditions. Then, the space of solutions is affine, and the dimension of the corresponding vector space is equal to n_λ.*

This proposition has many practical applications, in particular, for solving Helmholtz-like problems (see the upcoming §4.5).

As one can check readily, in the case of a self-adjoint operator, all eigenvalues are real numbers. In addition, let us mention an important result in regard to the eigenvectors of compact and self-adjoint operators in a separable Hilbert space.

Theorem 4.1.20 `(spectral)` *Assume that V is separable. Let $A \in \mathcal{L}(V)$ be a compact and self-adjoint operator. Then, there exists a Hilbert basis*[5] *of V made of eigenvectors of A.*

With this result, one can write a compact and self-adjoint operator as a sum of scaled projection operators onto its eigenspaces: this is the so-called *spectral decomposition* of a compact, self-adjoint operator.

[5] A Hilbert basis of V is a countable set $(e_k)_{k\in\mathbb{N}}$ of elements of V, such that, for all k, ℓ, $(e_k, e_\ell)_V = \delta_{k\ell}$, and $\mathrm{span}(e_1, e_2, \cdots)$ is dense in V. Then, for all $v \in V$, one has $v = \sum_{k\in\mathbb{N}} (v, e_k)_V\, e_k$ and $\|v\|_V^2 = \sum_{k\in\mathbb{N}} (v, e_k)_V^2$ (Bessel-Parseval identity).

Let us mention some results on *interpolation theory*, in a Hilbert space V (see [158, Chapter 1, §2]). In this setting, W is a second Hilbert space, and it is also a dense, strict subspace (with continuous imbedding) of V. Classically, there exists a self-adjoint, positive unbounded operator Λ of V with domain $D(\Lambda) = W$. Moreover, $\|\cdot\|_W$ and the graph norm $(\|\cdot\|_V^2 + \|\Lambda\cdot\|_V^2)^{1/2}$ are equivalent norms on W. On the other hand, given a self-adjoint, positive unbounded operator A of V, one can define the unbounded operators A^θ for $\theta \geq 0$, with the help of the spectral representation of the unbounded operator A([6]). This leads to the ...

Definition 4.1.21 `(Interpolated space)` *Given $\theta \in [0,1]$, the Hilbert space $[W,V]_\theta = D(\Lambda^{1-\theta})$ is the* interpolated space *of order θ between W and V, with norm*

$$\|\cdot\|_{[W,V]_\theta} = \left(\|\cdot\|_V^2 + \|\Lambda^{1-\theta}\cdot\|_V^2\right)^{1/2}.$$

We now list some properties of interpolated spaces.[7]

Proposition 4.1.22 *Let $([W,V]_\theta)_{\theta\in[0,1]}$ be the interpolated spaces.*

- *The definition of the interpolated space is independent of the choice of the unbounded operator Λ.*
- *Given $\theta \in [0,1]$, there exists $C_\theta > 0$ such that*

$$\forall w \in W,\ \|w\|_{[W,V]_\theta} \leq C_\theta \|w\|_W^{1-\theta}\|w\|_V^\theta.$$

- *Given $0 \leq \theta_1 \leq \theta_2 \leq 1$, it holds that*

$$W \subset [W,V]_{\theta_1} \subset [W,V]_{\theta_2} \subset V,$$

[6] Let us explain briefly this construction when the imbedding $W \subset_c V$ is compact; this condition will hold in all the cases encountered in this book. Using Corollary 4.5.12 below, which is a straightforward consequence of Theorem 4.1.20, one constructs a Hilbert basis $(e_k)_{k\in\mathbb{N}}$ of V whose elements belong to W, and a non-decreasing sequence of strictly positive numbers $(\mu_k)_{k\in\mathbb{N}}$ tending to $+\infty$ such that:

$$\forall w \in W, \quad (e_k, w)_W = \mu_k^2\,(e_k, w)_V\,.$$

Clearly, $\|e_k\|_W = \mu_k$, thus the space W can be alternatively defined as

$$W = \{w = \sum_{k\in\mathbb{N}} w_k\, e_k \in V : \sum_{k\in\mathbb{N}} \mu_k^2\,|w_k|^2 < +\infty\} = D(\Lambda), \quad \text{where:} \quad \Lambda = \sum_{k\in\mathbb{N}} \mu_k\, P_k,$$

and P_k denotes the projection onto span$\{e_k\}$. Then, for any $\alpha \in \mathbb{R}^+$, one defines the unbounded operator power Λ^α as

$$D(\Lambda^\alpha) = \{w = \sum_{k\in\mathbb{N}} w_k\, e_k \in V : \sum_{k\in\mathbb{N}} \mu_k^{2\alpha}\,|w_k|^2 < +\infty\} \quad \text{and:} \quad \Lambda^\alpha = \sum_{k\in\mathbb{N}} \mu_k^\alpha\, P_k.$$

When the imbedding $W \subset V$ is *not* compact, the above discrete sums are replaced with Stieltjes integrals that take into account the whole spectrum (see [209, §XI]).

[7] In the compact imbedding framework, the next two propositions follow immediately from Definition 4.1.21 and footnote[6].

with continuous imbeddings.

- *Assume that the embedding of W into V is compact ; then, given $0 < \theta_1 < \theta_2 < 1$, all above embeddings are compact.*

One can also apply interpolation theory to bounded operators (below, $V^\diamond$, $W^\diamond$ are two other Hilbert spaces, with $W^\diamond$ a dense, strict subspace of $V^\diamond$, with continuous imbedding).

Proposition 4.1.23 `(Interpolated operator)` *Given $A \in \mathcal{L}(V, V^\diamond) \cap \mathcal{L}(W, W^\diamond)$, then for all $\theta \in [0,1]$, A belongs to $\mathcal{L}([W,V]_\theta, [W^\diamond, V^\diamond]_\theta)$.*

Also, we will frequently make use of sesquilinear[8] continuous forms on $V \times W$. Let $a : V \times W \to \mathbb{C}$, $(v,w) \mapsto a(v,w)$: $a(\cdot,\cdot)$ is *continuous* if the quantity

$$|||a||| = \sup_{v \in V\setminus\{0\}, w \in W\setminus\{0\}} \frac{|a(v,w)|}{\|v\|_V \|w\|_W}$$

is bounded. When $a(\cdot,\cdot)$ is sesquilinear and continuous on $V \times W$, it defines a unique bounded operator A from V to W':

$$\forall (v,w) \in V \times W,\ \langle Av, w\rangle_W = a(v,w).$$

Respectively, one can also define its conjugate transpose $A^\dagger$ from W to V':

$$\forall (v,w) \in V \times W,\ \langle A^\dagger w, v\rangle_V = \overline{a(v,w)}.$$

For a bilinear form a defined on Hilbert spaces V, W over $\mathbb{R}$, one defines A from V to W' as above, respectively the transpose A^t from W to V' without conjugation.
Evidently, given a bounded operator A from V to W', one could define a sesquilinear continuous form on $V \times W$.

4.2 Static problems

Let H be a Hilbert space. Then, let f be an element of H', and define

$$\begin{cases} \textit{Find } u \in H \textit{ such that} \\ \forall v \in H,\ (u,v)_H = \langle f, v\rangle. \end{cases} \tag{4.2}$$

Item (4.2) is called a *Variational Formulation*. It is the first instance in a long sequence of such Formulations.

The first result is the Riesz Theorem.

Theorem 4.2.1 `(Riesz)` *Problem (4.2) admits one, and only one, solution u in H. Moreover, it holds that $\|u\|_H = \|f\|_{H'}$.*

[8] A sesquilinear form is linear with respect to the first variable, and antilinear with respect to the second variable.

An interesting consequence of the Riesz Theorem 4.2.1 is the notion of pivot space. Indeed, the mapping $f \mapsto u$ is a bijective isometry from H' to H. Then, one can choose to *identify* H' with H.

Definition 4.2.2 `(pivot space)` *Let H be a Hilbert space. Whenever H' is identified with H – with the mapping $f \mapsto u$ – H is called the* pivot space.

Thus follows ...

Proposition 4.2.3 *Let H be a Hilbert space. Let V be a second Hilbert space such that V is a dense, vector subspace of H, and such that the canonical imbedding $i_{V\to H}$ is continuous. Then, when H is chosen as the pivot space, one can identify H with a vector subspace of V'.*

Indeed, given two Hilbert spaces H and V as in the above proposition, the imbedding $i_{H\to V'}$ is injective, continuous, and $i_{H\to V'}H$ is dense in V'. As a consequence, one can write

$$V \subset H \overset{\text{(pivot)}}{=} H' \subset V',$$

with continuous and dense imbeddings.

Given two Hilbert spaces V, W, given a continuous sesquilinear form a on $V \times W$, and given an element f of W', let us introduce another Variational Formulation

$$\begin{cases} \textit{Find } u \in V \textit{ such that} \\ \forall w \in W,\ a(u,w) = \langle f, w\rangle. \end{cases} \tag{4.3}$$

Definition 4.2.4 `(well-posedness, Hadamard)` *Problem (4.3) is well-posed in the Hadamard sense if, for all $f \in W'$, it has one, and only one, solution $u \in V$ with continuous dependence, i.e.,*

$$\exists C > 0, \forall f \in W',\ \textit{there exists a } \text{unique } u \in V \textit{ satisfying (4.3)} \\ \textit{and } \|u\|_V \le C\|f\|_{W'}.$$

We note that it is possible to reformulate Problem (4.3) as follows:

$$\begin{cases} \textit{Find } u \in V \textit{ such that} \\ Au = f \text{ in } W'. \end{cases} \tag{4.4}$$

We see in Problem (4.3) that u is characterized by two items: first, the fact that it belongs to a specified space V so that it is measured by $\|\cdot\|_V$, and second, either by its action on all elements of W, or by an equation, set in W'.

Clearly, the operator A^{-1} is well-defined (and continuous) from W' to V if, and only if, Problem (4.3) is well-posed in the Hadamard sense.

Proposition 4.2.5 *Problem (4.3) is well-posed in the Hadamard sense if, and only if, the operator A of Problem (4.4) is an isomorphism.*

We will usually write *well-posed* instead of *well-posed in the Hadamard sense.*

Then, we proceed with the second result, which generalizes Riesz's Theorem in the case when $V = W$. It is called the Lax-Milgram Theorem, and provides a condition sufficient to achieve well-posedness for Problem (4.3).

Definition 4.2.6 *Let $a(\cdot,\cdot)$ be a continuous sesquilinear form on $V \times V$. It is* coercive *if*

$$\exists \alpha > 0,\ \forall v \in V,\ |a(v,v)| \geq \alpha \, \|v\|_V^2.$$

Remark 4.2.7 *One could also choose to define the coerciveness of continuous sesquilinear forms by assuming*

$$\exists \alpha > 0,\ \exists \theta \in [0, 2\pi[,\quad \forall v \in V,\ \Re[\exp(\imath\theta)\, a(v,v)] \geq \alpha \, \|v\|_V^2.$$

This definition is equivalent *to Definition 4.2.6. We shall use the latter for coerciveness throughout this monograph.*
Moreover, with real-valued forms $a(\cdot,\cdot)$ (defined on a Hilbert space V over $\mathbb{R}$), both definitions boil down to

$$\exists s \in \{-1, +1\},\ \exists \alpha > 0,\ \forall v \in V,\ s\, a(v,v) \geq \alpha \, \|v\|_V^2.$$

Theorem 4.2.8 `(Lax-Milgram)` *When $V = W$, assume that the continuous and sesquilinear form a is coercive. Then, Problem (4.3) is well-posed.*

Instead of imposing coerciveness, one can assume a *stability condition*, also called an *inf-sup condition*. This can be useful when the arguments v and w do not belong to the same space.

Definition 4.2.9 *Let $a(\cdot,\cdot)$ be a continuous sesquilinear form on $V \times W$. It verifies a* stability condition *if*

$$\exists \alpha' > 0,\ \forall v \in V,\ \sup_{w \in W \setminus \{0\}} \frac{|a(v,w)|}{\|w\|_W} \geq \alpha' \, \|v\|_V. \tag{4.5}$$

It verifies the solvability condition *if*

$$\{w \in W \ :\ \forall v \in V,\ a(v,w) = 0\} = \{0\}. \tag{4.6}$$

Remark 4.2.10 *Condition (4.5) can be* equivalently *stated as the inf-sup condition*

$$\exists \alpha' > 0,\ \inf_{v \in V \setminus \{0\}} \sup_{w \in W \setminus \{0\}} \frac{|a(v,w)|}{\|v\|_V \|w\|_W} \geq \alpha'.$$

When $V = W$, the coerciveness of a sesquilinear form implies both a stability condition (with $\alpha' = \alpha$), together with a solvability condition, on the same form.
Then, one has the result below.

Proposition 4.2.11 *Assume that the continuous and sesquilinear form a verifies a stability condition (4.5) with a suitable α'. Then,* $\ker(A) = \{0\}$, *$R(A)$ is closed in W', and A is a bijective mapping from V to $R(A)$. As a consequence, given any $f \in R(A)$, Problem (4.3) admits one, and only one, solution u in V, and moreover, $\alpha' \|u\|_V \leq \|f\|_{W'}$. Furthermore, if the form a satisfies the solvability condition (4.6), $R(A) = W'$, and as a consequence, Problem (4.3) is well-posed.*

Theorem 4.2.12 `(Banach-Necas-Babuska)` *Problem (4.3) is well-posed if, and only if, the continuous and sesquilinear form a verifies a stability condition (4.5) and a solvability condition (4.6).*

Let us now introduce an *a priori* intermediate condition (cf. [57]).

Definition 4.2.13 *Let $a(\cdot,\cdot)$ be a continuous sesquilinear form on $V \times W$. It is* $\mathbb{T}$-coercive *if*

$$\exists \mathbb{T} \in \mathcal{L}(V,W),\ \textit{bijective},\ \exists \underline{\alpha} > 0,\ \forall v \in V,\ |a(v,\mathbb{T}v)| \geq \underline{\alpha}\, \|v\|_V^2.$$

Proposition 4.2.14 *Let $a(\cdot,\cdot)$ be a continuous and sesquilinear form: the form a is $\mathbb{T}$-coercive if, and only if, it satisfies a stability condition and a solvability condition.*

Remark 4.2.15 *So, to ensure that Problems (4.3) or (4.4) are well-posed:*

- *a* necessary and sufficient condition *is that the form a verifies a stability condition and a solvability condition (see Theorem 4.2.12);*
- *a* necessary and sufficient condition *is that the form a is $\mathbb{T}$-coercive (see Proposition 4.2.14);*
- *when $V = W$, a* sufficient condition *is that the form a is coercive (see the Lax-Milgram Theorem 4.2.8).*

Within the framework of the inf-sup theory, the operator $\mathbb{T}$ is sometimes called an inf-sup operator.

Remark 4.2.16 *If the form a is Hermitian (when $V = W$), the stability of $a(\cdot,\cdot)$ is sufficient to guarantee well-posedness. In the same spirit, for a Hermitian form a, the Definition 4.2.13 of $\mathbb{T}$-coercivity can be simplified to*

$$\exists \mathbb{T} \in \mathcal{L}(V),\ \exists \underline{\alpha} > 0,\ \forall v \in V,\ |a(v,\mathbb{T}v)| \geq \underline{\alpha}\, \|v\|_V^2.$$

In other words, it is not required for $\mathbb{T}$ to be bijective.

The next result is slightly more complicated, in the sense that it allows one to solve a Variational Formulation, which includes some constraints. More precisely, let Q be a third Hilbert space, and let:

- $a(\cdot,\cdot)$ be a continuous sesquilinear form on $V \times V$;
- $b(\cdot,\cdot)$ be a continuous sesquilinear form on $V \times Q$;
- $f \in V'$;

- $g \in Q'$.

Let us consider the *mixed problem*, or *constrained problem*:

$$\begin{cases} \textit{Find } (u,p) \in V \times Q \textit{ such that} \\ \forall v \in V,\ a(u,v) + \overline{b(v,p)} = \langle f, v\rangle, \\ \forall q \in Q,\ b(u,q) = \langle g, q\rangle. \end{cases} \tag{4.7}$$

In the above, the last line expresses the fact that u has to fulfill some constraints, with respect to its action on elements of Q. In terms of operators, recall that one can introduce the bounded operators B and $B^\dagger$, respectively from V to Q' and from Q to V':

$$\forall (v,q) \in V \times Q,\ \langle Bv, q\rangle = b(v,q) = \overline{\langle B^\dagger q, v\rangle}. \tag{4.8}$$

Problem (4.7) can be reformulated equivalently:

$$\begin{cases} \textit{Find } (u,p) \in V \times Q \textit{ such that} \\ Au + B^\dagger p = f \text{ in } V', \\ Bu = g \text{ in } Q'. \end{cases} \tag{4.9}$$

Remark 4.2.17 *When the forms are real-valued and when $a(\cdot,\cdot)$ is symmetric, (4.7) is also referred to as a* saddle-point problem*. The expression* mixed problem *is generally used in the framework of variational analysis, whereas the term* saddle-point formulation *refers merely to the context of optimization under constraints. In the following, we will use, without distinction, the one or the other term, as they appear as two different sides of the same problem. Indeed, the mixed formulation (4.7) corresponds to the optimality conditions of the problem, which consists in minimizing the quadratic functional $J(v) = \frac{1}{2}a(v,v) - \langle f, v\rangle$ under the constraint (4.7-bottom). The bilinear form a being symmetric, the pair (u,p) solution to the mixed problem can be viewed, in this case, as the saddle-point of the* Lagrangian $\mathcal{L}(v,q) = J(v) + b(v,q) - \langle g, q\rangle$. *Recall that the saddle-point is defined as the pair (u,p) such that*

$$\forall v \in V,\ \forall q \in Q,\ \mathcal{L}(u,q) \le \mathcal{L}(u,p) \le \mathcal{L}(v,p).$$

Before stating the main result for the solution of (4.7-4.9), let us introduce the *inf-sup condition* on the form b for the mixed problem, where the infimum is taken over elements of Q:

$$\exists \beta > 0,\ \inf_{q \in Q\setminus\{0\}} \sup_{v \in V\setminus\{0\}} \frac{|b(v,q)|}{\|v\|_V\, \|q\|_Q} \ge \beta. \tag{4.10}$$

Now, let

$$K = \{v \in V \,:\, \forall q \in Q,\, b(v,q) = 0\} \text{ and } K^0 = \{h \in V' \,:\, \forall v \in K,\, \langle h, v\rangle = 0\}.$$

The subspace K of V is the kernel of B (when no confusion is possible, one writes that K is the kernel of $b(\cdot,\cdot)$), and K^0 is called its polar set. Provided $b(\cdot,\cdot)$ is continuous, K is a closed subspace of V, so that one can write: $V = K \oplus K^\perp$. It holds that

Lemma 4.2.18 *Let $b(\cdot,\cdot)$ be a continuous sesquilinear form on $V \times Q$. The three assertions are equivalent:*

- *there exists $\beta > 0$ such that $b(\cdot,\cdot)$ satisfies (4.10);*
- *the operator $B^\dagger$ is a bijective mapping from Q onto K^0, and moreover,*

$$\forall q \in Q,\ \|B^\dagger q\|_{V'} \geq \beta \|q\|_Q;$$

- *the operator B is a bijective mapping from $K^\perp$ onto Q', and moreover,*

$$\forall v \in K^\perp,\ \|Bv\|_{Q'} \geq \beta \|v\|_V.$$

We finally reach ...

Theorem 4.2.19 `(Babuska-Brezzi)` *[27, 64] Let a, b, f, g be defined as above. Assume that*

(i) the sesquilinear form a is coercive on $K \times K$;
(ii) the sesquilinear form b satisfies an inf-sup condition.

Then, Problem (4.7) admits one, and only one, solution (u, p) in $V \times Q$. Moreover, there exists a constant C independent of f such that $(\|u\|_V + \|p\|_Q) \leq C\,(\|f\|_{V'} + \|g\|_{Q'})$.

There exist variations of this result, which rely on weaker assumptions than the coerciveness of the form a on $K \times K$ and the inf-sup condition on $b(\cdot,\cdot)$: we refer the reader to [65].

Proof. (**of Theorem 4.2.19**). Let us call $\alpha > 0$ and $\beta > 0$, respectively, a coercivity constant for $a(\cdot,\cdot)$ on $K \times K$ (cf. Definition 4.2.6) and an inf-sup constant for $b(\cdot,\cdot)$ (cf. (4.10)).

1. Uniqueness is proven as follows. Assume that two solutions (u^1, p^1) and (u^2, p^2) to Problem (4.7) exist, then $(\delta u, \delta p) = (u^1 - u^2, p^1 - p^2)$ solves

$$\begin{cases} \textit{Find } (\delta u, \delta p) \in V \times Q \textit{ such that} \\ \forall v \in V,\ a(\delta u, v) + \overline{b(v, \delta p)} = 0, \\ \forall q \in Q,\ b(\delta u, q) = 0. \end{cases}$$

   The second equation states that δu belongs to K. Next, using $v = \delta u$ in the first equation leads to $a(\delta u, \delta u) = 0$, so that $\delta u = 0$, thanks to hypothesis (i). It follows that one has, for all $v \in V$, $\overline{b(v, \delta p)} = 0$ or, in other words, $B^\dagger(\delta p) = 0$. Thanks to hypothesis (ii) and Lemma 4.2.18, one gets that $\delta p = 0$.
2. On the other hand, again using hypothesis (ii) and Lemma 4.2.18, we know that

$$\exists! u_\perp \in K^\perp,\ Bu_\perp = g \text{ and } \beta \|u_\perp\|_V \leq \|g\|_{Q'}.$$

   (Note that $Bu_\perp = g$ can be rewritten: $\forall q \in Q,\ b(u_\perp, q) = \langle g, q \rangle$.)

3. Then, according to hypothesis (i), one can solve

$$\begin{cases} \textit{Find } u_\parallel \in K \textit{ such that} \\ \forall v_\parallel \in K,\ a(u_\parallel, v_\parallel) = \langle f, v_\parallel \rangle - a(u_\perp, v_\parallel)\,, \end{cases}$$

with the help of the Lax-Milgram Theorem 4.2.8. Its solution $u_\parallel$ exists and is unique, and moreover,

$$\alpha \, \|u_\parallel\|_V \leq \{\|f\|_{V'} + |||a||| \, \|u_\perp\|_V\} \leq \left\{\|f\|_{V'} + |||a|||\beta^{-1}\|g\|_{Q'}\right\}.$$

4. Let us aggregate steps 2. and 3. Introduce the candidate solution

$$u = u_\parallel + u_\perp, \tag{4.11}$$

and consider $v \in V$, which we split as $v = v_\parallel + v_\perp$, with $(v_\parallel, v_\perp) \in K \times K^\perp$. According to the definition of $u_\parallel$, one finds that

$$\langle f, v \rangle - a(u, v) = \langle f, v_\perp \rangle - a(u, v_\perp).$$

Then, $h \in V'$ defined as $\langle h, v \rangle = \langle f, v_\perp \rangle - a(u, v_\perp)$ actually belongs to the polar set K^0 of K. Thanks again to Lemma 4.2.18, we obtain that

$$\exists! p \in Q,\ B^\dagger p = h \text{ and } \beta\|p\|_Q \leq \|h\|_{V'} \leq \{\|f\|_{V'} + |||a||| \, \|u\|_V\}\,. \tag{4.12}$$

(Note that $B^\dagger p = h$ can be rewritten: $\forall v \in V,\ \overline{b(v,p)} = \langle h, v \rangle$.)

5. Existence of a solution to Problem (4.7) is a consequence of the previous steps. Consider u and p as in (4.11) and (4.12), respectively. Then, for all $v \in V$, and for all $q \in Q$, one finds

$$\begin{aligned} &a(u, v) + \overline{b(v, p)} = a(u, v) + \langle h, v \rangle = \langle f, v \rangle\,, \\ &b(u, q) = b(u_\perp, q) = \langle g, q \rangle\,. \end{aligned}$$

Moreover, one has the estimates

$$\begin{aligned} &\|u\|_V \leq \alpha^{-1}\|f\|_{V'} + \beta^{-1}\left\{1 + |||a|||\alpha^{-1}\right\}\|g\|_{Q'}\,, \\ &\|p\|_Q \leq \beta^{-1}\left\{\|f\|_{V'} + |||a|||\,\|u\|_V\right\}\,. \end{aligned}$$

■

Remark 4.2.20 *We carried out the proof over five steps. This process can be reproduced in other situations, such as time-dependent, or time-harmonic, problems with constraints.*

We have so far defined a series of well-posed static problems, under *ad hoc* assumptions. To bridge the gap with time-harmonic problems (see §1.2.1), let us briefly consider forms associated with Fredholm operators of index 0([9]).

[9] When the sesquilinear form in Problem (4.3) is Hermitian ($V = W$), if the associated operator is Fredholm, then its index is always equal to 0.

Definition 4.2.21 `(well-posedness, Fredholm)` *Problem (4.3) is well-posed in the Fredholm sense if the associated operator of Problem (4.4) is a Fredholm operator of index* 0.

In this setting, one may introduce a weak stability condition, respectively a weak $\mathbb{T}$-coercivity condition.

Definition 4.2.22 *Let $a(\cdot,\cdot)$ be a continuous sesquilinear form on $V \times W$. It verifies a* weak stability condition *if*

$$\exists C \in \mathcal{L}(V,W) \text{ compact}, \ \exists \alpha' > 0, \beta' \geq 0, \ \forall v \in V, \\ \sup_{w \in W \setminus \{0\}} \frac{|a(v,w)|}{\|w\|_W} \geq \alpha' \|v\|_V - \beta' \|Cv\|_W.$$

Definition 4.2.23 *Let $a(\cdot,\cdot)$ be a continuous sesquilinear form on $V \times W$. It is* weakly $\mathbb{T}$-coercive *if*

$$\exists \mathbb{T} \in \mathcal{L}(V,W) \text{ bijective}, \ \exists C \in \mathcal{L}(V,W) \text{ compact}, \ \exists \underline{\alpha} > 0, \underline{\beta} \geq 0, \ \forall v \in V, \\ |a(v, \mathbb{T}v)| \geq \underline{\alpha} \|v\|_V^2 - \underline{\beta} \|Cv\|_W^2.$$

Regarding the weak stability and weak $\mathbb{T}$-coercivity conditions, one may prove the results below for Hermitian forms.

Proposition 4.2.24 *When $V = W$, let $a(\cdot,\cdot)$ be a sesquilinear, continuous and Hermitian form on $V \times V$. For Problem (4.3) to be well-posed in the Fredholm sense:*

- *a* necessary and sufficient condition *is that the form a verifies a weak stability condition;*
- *a* necessary and sufficient condition *is that the form a is weakly $\mathbb{T}$-coercive.*

4.3 Time-dependent problems

Up to now, the abstract framework we have developed allows us to solve the so-called static problems in practical applications. In other words, problems in which the function spaces of solutions and of test functions, and the (anti)linear forms, depend only on the space variable. We turn now to problems that include some explicit dependence with respect to both the time and space variables $(t, \boldsymbol{x})$. Within the framework of the theory we recall hereafter, the solution u is not considered directly as a function of $(t, \boldsymbol{x})$. Instead, it is a function of t – and, as such, written as $u(t)$ – with values in a function space that depends solely on the space variable:

$$u : t \mapsto u(t), \quad u(t) : \boldsymbol{x} \mapsto u(t, \boldsymbol{x}).$$

4.3.1 Problems without constraints

Let A be an unbounded operator of V with domain $D(A)$, $u_0 \in V$ and $f : \mathbb{R}^+ \to V$. Then, the first-order time-dependent problem to be solved is formulated as

$$\begin{cases} \textit{Find } u \textit{ such that} \\ \dfrac{du}{dt} + Au = f, \quad t > 0, \\ u(0) = u_0. \end{cases} \tag{4.13}$$

Above, $u(0) = u_0$ is called an *initial condition*.
We now introduce the important notion of strong solutions with respect to the time variable t. Here, we mostly follow the teaching material of Joly [145].

Definition 4.3.1 *u is a strong solution to Problem (4.13), provided that*

(i) $u \in C^1(\mathbb{R}^+; V)$;
(ii) $\forall t \geq 0$, $u(t) \in D(A)$ *and, moreover,* $u \in C^0(\mathbb{R}^+, D(A))$;
(iii) $\forall t > 0$, $u'(t) + Au(t) = f(t)$ *in* V, *and* $u(0) = u_0$.

According to the requested regularity in time, we note that a strong solution satisfies Problem (4.13) in the classical sense. Also, provided that f belongs to $C^0(\mathbb{R}^+_*; V)$, conditions (i) and (iii) imply that $u \in C^0(\mathbb{R}^+_*; D(A))$, when $D(A)$ is endowed with its graph norm. Then, one has the fundamental result below.

Theorem 4.3.2 `(Hille-Yosida)` *[209, 173, 63] Let A be an unbounded operator of V with domain $D(A)$. Assume that there exists $\mu \in \mathbb{R}$ such that $A + \mu I_V$ is maximal monotone. Then, given $f \in C^1(\mathbb{R}^+; V)$ and $u_0 \in D(A)$, Problem (4.13) admits one, and only one, strong solution in the sense of Definition 4.3.1. In addition, the solution can be bounded as follows:*

$$\forall t \in \mathbb{R}^+, \ \|u(t)\|_V \leq \|u_0\|_V + \int_0^t \|f(s)\|_V \, ds,$$
$$\forall t \in \mathbb{R}^+, \ \|\frac{du}{dt}(t)\|_V \leq \|Au_0\|_V + \|f(0)\|_V + \int_0^t \|\frac{df}{dt}(s)\|_V \, ds.$$

The proof of this result is based on the *semi-group theory*.

Remark 4.3.3 *One can choose to solve the first-order problem on the time interval $]0, T[$, with $T > 0$ given. In this case, with the same assumptions about the operator A, one easily finds that*

$$\begin{cases} C^1([0,T]; V) \times D(A) \to C^0([0,T]; D(A)) \times C^0([0,T]; V) \\ (f, u_0) \qquad\qquad\qquad\quad \mapsto (u, u') \end{cases}$$

is continuous (with a constant that depends on T).

It is also possible to define strong solutions in a slightly weaker sense (see [63]). Basically, it is no longer required that the initial data belongs to $D(A)$. As a consequence, the assumption about u_0 can be relaxed to $u_0 \in V$ in the

corresponding version of the Hille-Yosida Theorem.[10] In this case, items (i) and (ii) of Definition 4.3.1 are modified as follows:

(i)' $u \in C^1(\mathbb{R}_*^+; V) \cap C^0(\mathbb{R}^+; V)$;
(ii)' $\forall t > 0$, $u(t) \in D(A)$ and, moreover, $u \in C^0(\mathbb{R}_*^+, D(A))$.

For that, one can consider self-adjoint operators (other possibilities are described, for instance, in [93]).

Theorem 4.3.4 `(Hille-Yosida)` *[63] Let A be an unbounded and self-adjoint operator of V with domain $D(A)$. Assume that there exists $\mu \in \mathbb{R}$ such that $A + \mu I_V$ is maximal monotone. Then, given $f \in C^1(\mathbb{R}^+; V)$ and $u_0 \in V$, Problem (4.13) admits one, and only one, strong solution in the sense of Definition 4.3.1 with items (i)'-(ii)'-(iii). In addition, the solution can be bounded as follows:*

$$\forall t \in \mathbb{R}^+,\ \|u(t)\|_V \leq \|u_0\|_V + \int_0^t \|f(s)\|_V\, ds,$$
$$\forall t \in \mathbb{R}_*^+,\ \|\frac{du}{dt}(t)\|_V \leq \frac{1}{t}\|u_0\|_V + \|f(0)\|_V + \int_0^t \|\frac{df}{dt}(s)\|_V\, ds.$$

Moreover, if $f = 0$, one has

$$\forall k, l \in \mathbb{N},\ u \in C^k(\mathbb{R}_*^+; D(A^l)).$$

The last result is called a *regularizing effect*. Also, it is possible that

$$\lim_{t \to 0^+} \|u'(t)\|_V = +\infty.$$

Remark 4.3.5 *If one has $f \in C^0(\mathbb{R}^+; V) \cap L^1(\mathbb{R}^+; D(A))$, then Problem (4.13) still has a strong solution. In addition, one has*

$$\forall t \in \mathbb{R}^+,\ \|\frac{du}{dt}(t)\|_V \leq \|Au_0\|_V + \|f(t)\|_V + \int_0^t \|Af(s)\|_V\, ds.$$

On the other hand, if one has only $f \in C^0(\mathbb{R}^+; V)$, then it is no longer guaranteed that this time-dependent problem has a strong solution (cf. Chapter XVII of [93]).

A third variant of a strong solution appears in a slightly different context, namely, when the operator A is *skew-adjoint*. Generally speaking, this feature corresponds to an energy conservation property of the evolution problem (4.13); one can thus define solutions for *negative*, as well as positive, values of time t, i.e., solve the "backward" problem (for $t < 0$), as well as the forward one. In this case, we take the following variants of the items in Definition 4.3.1:

[10] For practical applications, it allows one to consider initial data that do not verify the constraints that the solution fulfills afterwards.

(i)" $u \in C^1(\mathbb{R}; V)$;
(ii)" $\forall t \in \mathbb{R}$, $u(t) \in D(A)$ and, moreover, $u \in C^0(\mathbb{R}, D(A))$;
(iii)" $\forall t \in \mathbb{R}$, $u'(t) + Au(t) = f(t)$ in V, and $u(0) = u_0$.

There is no regularizing effect in this case, i.e., the initial data must belong to the domain of A. On the other hand, the self-adjointness assumption of Theorem 4.3.4 is linked to energy dissipation, which accounts for the regularizing effect, and makes the backward problem ill-posed.

The corresponding result is now stated.

Theorem 4.3.6 `(Stone)` *[209] Let A be an unbounded and skew-adjoint operator of V with domain $D(A)$. Then, given $u_0 \in D(A)$ and either (a) $f \in C^1(\mathbb{R}; V)$ or (b) $f \in C^0(\mathbb{R}; V) \cap L^1(\mathbb{R}; D(A))$, Problem (4.13) admits one, and only one, strong solution in the sense of Definition 4.3.1, with items (i)"-(ii)"-(iii)". In addition, the solution can be bounded as follows, according to the assumptions (a) or (b):*

$$\forall t \in \mathbb{R},\ \|u(t)\|_V \leq \|u_0\|_V + \int_0^t \|f(s)\|_V\, ds,$$

$$(a)\ \forall t \in \mathbb{R},\ \|\frac{du}{dt}(t)\|_V \leq \|Au_0\|_V + \|f(0)\|_V + \int_0^t \|\frac{df}{dt}(s)\|_V\, ds,$$

$$(b)\ \forall t \in \mathbb{R},\ \|\frac{du}{dt}(t)\|_V \leq \|Au_0\|_V + \|f(t)\|_V + \int_0^t \|Af(s)\|_V\, ds.$$

The proof once more relies upon semi-group theory. Furthermore, one can prove the following *causality* result.

Proposition 4.3.7 *Assume the hypotheses of Theorem 4.3.6. Let f_1, f_2 satisfy either (a) or (b), and u_1, u_2 be the corresponding solutions to (4.13). If $f_1(t) = f_2(t)$ for a.e. $t \geq 0$, then u_1 and u_2 also coincide for a.e. $t \geq 0$. As a consequence, if one is interested in the forward problem only, it is not necessary to know the values of the r.h.s. for $t < 0$.*

It turns out that one can apply this theory (Theorem 4.3.2) to solve second-order time-dependent problems and find strong solutions of such problems. These problems write

$$\begin{cases} \textit{Find } \mathtt{u} \textit{ such that} \\ \dfrac{d^2\mathtt{u}}{dt^2} + \mathtt{Au} = \mathtt{f}, \quad t > 0\,; \\ \mathtt{u}(0) = \mathtt{u}_0\ ,\ \dfrac{d\mathtt{u}}{dt}(0) = \mathtt{u}_1. \end{cases} \tag{4.14}$$

Above, $\mathtt{u}(0) = \mathtt{u}_0$ and $\mathtt{u}'(0) = \mathtt{u}_1$ are the two initial conditions.
Here, one needs to consider two Hilbert spaces:

- $\mathcal{H}$, a Hilbert space, with scalar product $(\cdot,\cdot)_{\mathcal{H}}$ and norm $\|\cdot\|_{\mathcal{H}}$;
- $\mathcal{V}$, a Hilbert space, with scalar product $(\cdot,\cdot)_{\mathcal{V}}$ and norm $\|\cdot\|_{\mathcal{V}}$;

- the imbedding $i_{\mathcal{V}\to\mathcal{H}}$ is continuous;
- $\mathcal{V}$ is dense in $\mathcal{H}$.

The operator $\mathtt{A}$ is defined *via* a sesquilinear continuous and Hermitian form a defined on $\mathcal{V}\times\mathcal{V}$, which fulfills the following property:

$$\exists\nu\in\mathbb{R}^+,\ \exists\alpha\in\mathbb{R}^+_*,\ \forall\mathtt{v}\in\mathcal{V},\ a(\mathtt{v},\mathtt{v})+\nu\,\|\mathtt{v}\|^2_{\mathcal{H}}\geq\alpha\,\|\mathtt{v}\|^2_{\mathcal{V}}. \tag{4.15}$$

Remark 4.3.8 *Note that one can define another scalar product on $\mathcal{V}$, with associated norm ${}_2\|\cdot\|_{\mathcal{V}}$ equivalent to $\|\cdot\|_{\mathcal{V}}$ in $\mathcal{V}$. It writes*

$$\forall\mathtt{v},\mathtt{w}\in\mathcal{V},\ {}_2(\mathtt{v},\mathtt{w})_{\mathcal{V}}=a(\mathtt{v},\mathtt{w})+\nu\,(\mathtt{v},\mathtt{w})_{\mathcal{H}}.$$

Then, one can introduce the unbounded operator $\mathtt{A}$ of $\mathcal{H}$ with domain $D(\mathtt{A})$

$$\begin{cases} D(\mathtt{A})=\{\mathtt{v}\in\mathcal{V}\ :\ \exists h\in\mathcal{H},\ \forall\mathtt{w}\in\mathcal{V},\ a(\mathtt{v},\mathtt{w})=(h,\mathtt{w})_{\mathcal{H}}\};\\ \forall\mathtt{v}\in D(\mathtt{A}),\ \forall\mathtt{w}\in\mathcal{V},\ (\mathtt{A}\mathtt{v},\mathtt{w})_{\mathcal{H}}=a(\mathtt{v},\mathtt{w}). \end{cases} \tag{4.16}$$

Definition 4.3.9 $\mathtt{u}$ *is a strong solution to Problem (4.14), provided that*

(i) $\mathtt{u}\in C^2(\mathbb{R}^+;\mathcal{H})\cap C^1(\mathbb{R}^+;\mathcal{V})$*;*
(ii) $\forall t\geq 0$, $\mathtt{u}(t)\in D(\mathtt{A})$ *and, moreover,* $\mathtt{u}\in C^0(\mathbb{R}^+,D(\mathtt{A}))$*;*
(iii) $\forall t>0$, $\mathtt{u}''(t)+\mathtt{A}\mathtt{u}(t)=\mathtt{f}(t)$ *in* $\mathcal{H}$, $\mathtt{u}(0)=\mathtt{u}_0$ *and* $\mathtt{u}'(0)=\mathtt{u}_1$.

From this point on, one can prove an equivalence result between the existence of $\mathtt{u}$ as a strong solution to Problem (4.14) and the existence of a strong solution to a companion – first-order time-dependent – problem. We give the main steps of the process, since it will be of use later on for solving the time-dependent Maxwell equations, written as wave equations with constraints (cf. §1.5.3). For the moment, we adopt the following point of view. To determine *ad hoc* conditions that ensure the existence and uniqueness of a strong solution to Problem (4.14), let us use the Hille-Yosida Theorem 4.3.2. To that aim, introduce $V=\mathcal{V}\times\mathcal{H}$. Its elements are denoted by $v=(\mathtt{v},h)$. It is a Hilbert space, with the scalar product $(v,\tilde{v})_V={}_2(\mathtt{v},\tilde{\mathtt{v}})_{\mathcal{V}}+(h,\tilde{h})_{\mathcal{H}}$. Next, let A be an unbounded operator of V, defined by

$$\begin{cases} D(A)=D(\mathtt{A})\times\mathcal{V};\\ \forall v=(\mathtt{v},h)\in D(A),\ Av=(-h,\mathtt{A}\mathtt{v}). \end{cases}$$

The data are equal to $u_0=(\mathtt{u}_0,\mathtt{u}_1)$ and $f=(0,\mathtt{f})$.
Finally, we are in a position to consider Problem (4.13) with V, A, f and u_0 as above. One obtains the following simple result...

Proposition 4.3.10 *Assume that* $\mathtt{u}$ *is a strong solution to Problem (4.14); then,* $u=(\mathtt{u},\mathtt{u}')$ *is a strong solution to Problem (4.13).*
Conversely, assume that $u=(\mathtt{u},h)$ *is a strong solution to Problem (4.13); then,* $\mathtt{u}$ *is a strong solution to Problem (4.14).*

As a conclusion, one can exhibit sufficient conditions to ensure the existence, uniqueness and continuous dependence of the solution to the second-order time-dependent problem. Indeed, according to the definition of the scalar product on V, maximal monotony of $A + \mu I_V$ stems from property (4.15), with the admissible choice $\mu \geq \sqrt{\nu}/2$.

Theorem 4.3.11 *Let $a(\cdot,\cdot)$ be a the sesquilinear, continuous and Hermitian form defined on $\mathcal{V} \times \mathcal{V}$, which fulfills property (4.15). Let the operator $\mathtt{A}$ be defined as in (4.16). Then, given $\mathtt{f} \in C^1(\mathbb{R}^+;\mathcal{H})$, $\mathtt{u}_0 \in D(\mathtt{A})$ and $\mathtt{u}_1 \in \mathcal{V}$, Problem (4.14) admits one, and only one, strong solution in the sense of Definition 4.3.9. In addition, for any $t \geq 0$, the norms $\|\mathtt{u}(t)\|_{\mathcal{V}}$, $\|\mathtt{u}'(t)\|_{\mathcal{V}}$ and $\|\mathtt{u}''(t)\|_{\mathcal{H}}$ can be bounded by (homogeneous) expressions involving only the norms of the data.*

So far, we have addressed the well-posedness of our first- and second-order time-dependent problems, based on the concept of strong solutions.

There exists an alternative technique for second-order time-dependent problems that relies on weak solutions. It is usually referred to as the Lions-Magenes theory [158]. It relies mainly on mathematical tools such as distributions, and Lebesgue and Sobolev spaces. The starting point is still Problem (4.14), which will be re-interpreted below. Here, the Hilbert space $\mathcal{H}$ is usually considered as the pivot space, so that $\mathcal{V} \subset \mathcal{H} \subset \mathcal{V}'$.

Consider $T > 0$ and assume that $\mathtt{u}$ is a strong solution to Problem (4.14) on the time interval $]0,T[$, in the sense of Definition 4.3.9. Then, since $\mathcal{V}$ is dense in $\mathcal{H}$, one gets the series of equivalent statements:

$$\begin{aligned}
&\forall t \in]0,T[,\ \frac{d^2\mathtt{u}}{dt^2}(t) + \mathtt{A}\mathtt{u}(t) = \mathtt{f}(t) \text{ in } \mathcal{H}\\
\Longleftrightarrow\ &\forall t \in]0,T[,\ \forall \mathtt{v} \in \mathcal{V},\ (\frac{d^2\mathtt{u}}{dt^2}(t),\mathtt{v})_{\mathcal{H}} + (\mathtt{A}\mathtt{u}(t),\mathtt{v})_{\mathcal{H}} = (\mathtt{f}(t),\mathtt{v})_{\mathcal{H}}\\
\Longleftrightarrow\ &\forall t \in]0,T[,\ \forall \mathtt{v} \in \mathcal{V},\ \frac{d^2}{dt^2}(\mathtt{u}(t),\mathtt{v})_{\mathcal{H}} + a(\mathtt{u}(t),\mathtt{v}) = (\mathtt{f}(t),\mathtt{v})_{\mathcal{H}}.
\end{aligned}$$

One defines *weak solutions*, for which the last statement is not satisfied for all t in $]0,T[$, but in the sense of distributions instead. In other words, the weak solution, still denoted by $\mathtt{u}$, satisfies the weaker statement[11]:

$$\forall \mathtt{v} \in \mathcal{V},\ \frac{d^2}{dt^2}(\mathtt{u}(t),\mathtt{v})_{\mathcal{H}} + a(\mathtt{u}(t),\mathtt{v}) = (\mathtt{f}(t),\mathtt{v})_{\mathcal{H}} \text{ in } \mathcal{D}'(]0,T[). \tag{4.17}$$

[11] It is equivalently written as

$$\begin{cases} \forall \varphi \in \mathcal{D}(]0,T[),\ \forall \mathtt{v} \in \mathcal{V},\\ \displaystyle\int_0^T \big\{(\mathtt{u}(t),\mathtt{v})_{\mathcal{H}}\,\varphi''(t) + a(\mathtt{u}(t),\mathtt{v})\,\varphi(t)\big\}\,dt = \int_0^T (\mathtt{f}(t),\mathtt{v})_{\mathcal{H}}\,\varphi(t)\,dt. \end{cases}$$

Definition 4.3.12 $\mathtt{u}$ *is a weak solution to Problem (4.14) on the time interval* $]0,T[$*, provided that*

(i) $u \in L^2(0,T;\mathcal{V})$ *and* $\mathtt{u}' \in L^2(0,T;\mathcal{H})$*;*

(ii) $\forall \mathtt{v} \in \mathcal{V},\ \big((\mathtt{u}(t),\mathtt{v})_{\mathcal{H}}\big)'' + a(\mathtt{u}(t),\mathtt{v}) = (\mathtt{f}(t),\mathtt{v})_{\mathcal{H}}$ *in* $\mathcal{D}'(]0,T[)$*,*
$\mathtt{u}(0) = \mathtt{u}_0$ *and* $\mathtt{u}'(0) = \mathtt{u}_1$*.*

We note that Problem (4.14) must be re-interpreted when weak solutions are sought. Indeed, since $\mathtt{u}(t)$ belongs to $\mathcal{V}$ instead of $D(\mathtt{A})$ – in contrast to strong solutions (see Definition 4.3.9 (ii)) – $\mathtt{A}\mathtt{u}(t)$ has no meaning. For this reason, one instead introduces the bounded operator $\mathtt{A}_w$ of $\mathcal{L}(\mathcal{V},\mathcal{V}')$, defined by

$$\forall \mathtt{v},\mathtt{w} \in \mathcal{V},\ \langle \mathtt{A}_w\mathtt{v},\mathtt{w}\rangle_{\mathcal{V}} = a(\mathtt{v},\mathtt{w}).$$

Thus, $\mathtt{A}_w\mathtt{u}(t)$ belongs to $\mathcal{V}'$, and moreover, $\mathtt{A}_w\mathtt{u} \in L^2(0,T;\mathcal{V}')$. So, when weak solutions to the second-order time-dependent Problem (4.14) are studied, the operator that acts on the solution is $\mathtt{A}_w$.

Theorem 4.3.13 (Lions-Magenes) *[158] Assume that the sesquilinear, continuous and Hermitian form a fulfills property (4.15), and let the operator* $\mathtt{A}_w$ *be defined as above. Then, given* $T > 0$*,* $\mathtt{f} \in L^2(0,T;\mathcal{H})$*,* $\mathtt{u}_0 \in \mathcal{V}$ *and* $\mathtt{u}_1 \in \mathcal{H}$*, on the time interval* $]0,T[$*, Problem (4.14), admits one, and only one, weak solution in the sense of Definition 4.3.12. In addition,*

$$\begin{cases} L^2(0,T;\mathcal{H}) \times \mathcal{V} \times \mathcal{H} \to C^0([0,T];\mathcal{V}) \times C^0([0,T];\mathcal{H}) \\ (\mathtt{f},\mathtt{u}_0,\mathtt{u}_1) \qquad\qquad\qquad \mapsto (\mathtt{u},\mathtt{u}') \end{cases}$$

is continuous (with a constant that depends on T*).*

In other words, the well-posedness of second-order time-dependent problems also holds for weak solutions (under assumptions that are different from those introduced in the case of strong solutions).

Remark 4.3.14 *Within the framework of the previous Theorem, a weak solution is such that* $\mathtt{A}_w\mathtt{u} \in C^0([0,T];\mathcal{V}')$*. Since* $\mathtt{f} \in L^2(0,T;\mathcal{H})$*, it follows that* $\mathtt{u}'' \in L^2(0,T;\mathcal{V}')$*. In particular, one can choose to rewrite* $\big((\mathtt{u}(t),\mathtt{v})_{\mathcal{H}}\big)''$ *as* $\langle \mathtt{u}''(t),\mathtt{v}\rangle$*, for all* $\mathtt{v} \in \mathcal{V}$*.*

For Maxwell's equations, it is important to note that the notion of weak solutions can be extended to the slightly modified problem below. Introduce ${}_2(\cdot,\cdot)_{\mathcal{H}}$, a second scalar product on $\mathcal{H}$, such that ${}_2\|\cdot\|_{\mathcal{H}}$ and $\|\cdot\|_{\mathcal{H}}$ are equivalent norms. Therefore, one can equip $\mathcal{H}$ with ${}_2\|\cdot\|_{\mathcal{H}}$ without changing its topology; let us denote this space as $\mathcal{H}_2$ to emphasize this point of view. Note that in the formulation of property (4.15), one can replace $\|\cdot\|_{\mathcal{H}}$ with ${}_2\|\cdot\|_{\mathcal{H}}$ (resulting in a different ν). Then, statement (4.17) is replaced by

$$\forall \mathtt{v} \in \mathcal{V},\ \frac{d^2}{dt^2}\left\{{}_2(\mathtt{u}(t),\mathtt{v})_{\mathcal{H}}\right\} + a(\mathtt{u}(t),\mathtt{v}) = (\mathtt{f}(t),\mathtt{v})_{\mathcal{H}} \text{ in } \mathcal{D}'(]0,T[), \tag{4.18}$$

which defines a modified second-order time-dependent problem. Interestingly, one can prove that this modified problem is also well-posed.

Corollary 4.3.15 *Let* $\mathtt{f} \in L^2(0,T;\mathcal{H})$, $\mathtt{u}_0 \in \mathcal{V}$ *and* $\mathtt{u}_1 \in \mathcal{H}$. *The variational formulation* (4.18) *admits one, and only one, weak solution on the time interval* $]0,T[$, *satisfying* $(\mathtt{u},\mathtt{u}') \in C^0([0,T];\mathcal{V}) \times C^0([0,T];\mathcal{H})$. *In addition,*

$$\begin{cases} L^2(0,T;\mathcal{H}) \times \mathcal{V} \times \mathcal{H} \to C^0([0,T];\mathcal{V}) \times C^0([0,T];\mathcal{H}) \\ (\mathtt{f},\mathtt{u}_0,\mathtt{u}_1) \qquad\qquad\qquad \mapsto (\mathtt{u},\mathtt{u}') \end{cases}$$

is continuous (with a constant that depends on T*).*

Proof. Using Riesz's Theorem in $\mathcal{H}_2$, one can rewrite the r.h.s. of (4.18), which becomes:

$$\forall \mathtt{v} \in \mathcal{V},\ \frac{d^2}{dt^2}\left\{{}_2(\mathtt{u}(t),\mathtt{v})_{\mathcal{H}}\right\} + a(\mathtt{u}(t),\mathtt{v}) = {}_2(\mathtt{f}_{(2)}(t),\mathtt{v})_{\mathcal{H}} \text{ in } \mathcal{D}'(]0,T[). \quad (4.19)$$

Of course, the functions of time with values in $\mathcal{H}$ have the same regularity when seen as taking their values in $\mathcal{H}_2$; and the norm of $\mathtt{f}_{(2)}$ in $L^2(0,T;\mathcal{H}_2)$ is bounded above and below by the norm of $\mathtt{f}$ in $L^2(0,T;\mathcal{H})$. Applying Theorem 4.3.13 to the weak formulation (4.19), set in the spaces $\mathcal{V}$ and $\mathcal{H}_2$, gives us the result. ■

4.3.2 Problems with constraints

We proceed by studying the existence of weak solutions for second-order time-dependent problems *with constraints*. Let $\mathcal{Q}$ be a third Hilbert space, and let $b(\cdot,\cdot)$ be a continuous sesquilinear form on $\mathcal{V} \times \mathcal{Q}$, with associated operators $\mathtt{B}$ and $\mathtt{B}^\dagger$ defined as in (4.8). We are now interested in solving

$$\begin{cases} \textit{Find } (\mathtt{u},\mathtt{p}) \textit{ such that} \\ \dfrac{d^2\mathtt{u}}{dt^2} + \mathtt{A}_w\mathtt{u} + \mathtt{B}^\dagger\mathtt{p} = \mathtt{f}, \quad t > 0, \\ \mathtt{B}\mathtt{u} = \mathtt{g}, \quad t > 0, \\ \mathtt{u}(0) = \mathtt{u}_0\ ;\ \dfrac{d\mathtt{u}}{dt}(0) = \mathtt{u}_1. \end{cases} \quad (4.20)$$

Next, we define weak solutions of such a problem on a time interval $]0,T[$.

Definition 4.3.16 $(\mathtt{u},\mathtt{p})$ *is a weak solution to Problem (4.20) on the time interval* $]0,T[$, *provided that*

(i) $\mathtt{u} \in C^1([0,T];\mathcal{H}) \cap C^0([0,T];\mathcal{V})$;
(ii) $\mathtt{p} \in C^0([0,T];\mathcal{Q})$;
(iii) $\forall \mathtt{v} \in \mathcal{V}$, $\big((\mathtt{u}(t),\mathtt{v})_{\mathcal{H}}\big)'' + a(\mathtt{u}(t),\mathtt{v}) + \overline{b(\mathtt{v},\mathtt{p}(t))} = (\mathtt{f}(t),\mathtt{v})_{\mathcal{H}}$ *in* $\mathcal{D}'(]0,T[)$, $\mathtt{u}(0) = \mathtt{u}_0$ *and* $\mathtt{u}'(0) = \mathtt{u}_1$;
(iv) $\forall t \in [0,T]$, $\forall \mathtt{q} \in \mathcal{Q}$, $b(\mathtt{u}(t),\mathtt{q}) = \langle \mathtt{g}(t),\mathtt{q}\rangle$.

As we are mainly interested in solving Maxwell's equations, we shall replace $\big((\mathtt{u}(t),\mathtt{v})_{\mathcal{H}}\big)''$ with $\big({}_2(\mathtt{u}(t),\mathtt{v})_{\mathcal{H}}\big)''$ in (iii). As a consequence, Problem (4.20) becomes

$$\begin{cases} \textit{Find } (\mathtt{u},\mathtt{p}) \textit{ such that} \\ \forall \mathtt{v} \in \mathcal{V},\ \dfrac{d^2}{dt^2}\{{}_2(\mathtt{u}(t),\mathtt{v})_{\mathcal{H}}\} + a(\mathtt{u}(t),\mathtt{v}) \\ \qquad\qquad\qquad\qquad + \overline{b(\mathtt{v},\mathtt{p}(t))} = (\mathtt{f}(t),\mathtt{v})_{\mathcal{H}} \text{ in } \mathcal{D}'(]0,T[), \\ \forall t \in [0,T],\ \forall \mathtt{q} \in \mathcal{Q},\ b(\mathtt{u}(t),\mathtt{q}) = \langle \mathtt{g}(t),\mathtt{q}\rangle\,; \\ \mathtt{u}(0) = \mathtt{u}_0\ ,\ \dfrac{d\mathtt{u}}{dt}(0) = \mathtt{u}_1. \end{cases} \tag{4.21}$$

To analyse this problem, we shall introduce some definitions, which also serve in studying the associated discrete problems [19]. First, we introduce $\mathcal{K}$, the kernel of $b(\cdot,\cdot)$ (which is a closed subspace of $\mathcal{V}$),

$$\mathcal{K} = \{\mathtt{v} \in \mathcal{V}\ :\ \forall \mathtt{q} \in \mathcal{Q},\ b(\mathtt{v},\mathtt{q}) = 0\},$$

its polar set $\mathcal{K}^0 \subset \mathcal{V}'$, and its orthogonal $\mathcal{K}^\perp$ in $\mathcal{V}$. We still assume that the property (4.15) holds; thus, we take *a priori* the orthogonality in the sense of the equivalent scalar product ${}_2(\cdot,\cdot)_{\mathcal{V}} = a(\cdot,\cdot) + \nu\,(\cdot,\cdot)_{\mathcal{H}}$ or $a(\cdot,\cdot) + \nu_2\,{}_2(\cdot,\cdot)_{\mathcal{H}}$ (see Remark 4.3.8). Nevertheless, we shall need the following hypothesis to prove the well-posedness of the constrained formulations.

Definition 4.3.17 *The spaces $\mathcal{K}$ and $\mathcal{K}^\perp$ satisfy a* double orthogonality property *in $\mathcal{V}$ and $\mathcal{H}$ (respectively $\mathcal{H}_2$) if:*

$$\forall (\mathtt{v}_\parallel,\mathtt{v}_\perp) \in \mathcal{K}\times\mathcal{K}^\perp,\ a(\mathtt{v}_\parallel,\mathtt{v}_\perp) = 0 \textit{ and } (\mathtt{v}_\parallel,\mathtt{v}_\perp)_{\mathcal{H}} = 0,\ \textit{respectively } {}_2(\mathtt{v}_\parallel,\mathtt{v}_\perp)_{\mathcal{H}} = 0.$$

This notion is of fundamental importance in addressing the solution of the time-dependent Maxwell equations. The proof of the following Lemma is left to the reader.

Lemma 4.3.18 *Let $\mathcal{L}$ be the closure of $\mathcal{K}$ in $\mathcal{H}$, and $\mathcal{L}^\perp$ its orthogonal in $\mathcal{H}$. If $\mathcal{V}$ is dense in $\mathcal{H}$, and the double orthogonality property holds for $\mathcal{K}$ and $\mathcal{K}^\perp$ in $\mathcal{V}$ and $\mathcal{H}$, then $\mathcal{L}^\perp$ is the closure of $\mathcal{K}^\perp$ in $\mathcal{H}$.*

Thus, any $\mathtt{z} \in \mathcal{H}$ can be split as $\mathtt{z} = \mathtt{z}_\parallel + \mathtt{z}_\perp$, with $(\mathtt{z}_\parallel,\mathtt{z}_\perp)_{\mathcal{H}} = 0$; if $\mathtt{z} \in \mathcal{V}$, this decomposition coincides with that in $\mathcal{K}\times\mathcal{K}^\perp$. Of course, one can replace $\mathcal{H}$ with $\mathcal{H}_2$, i.e., the scalar product $(\cdot,\cdot)_{\mathcal{H}}$ with ${}_2(\cdot,\cdot)_{\mathcal{H}}$ in the above Lemma.

Theorem 4.3.19 *Assume that the sesquilinear, continuous and Hermitian form a fulfills the property* (4.15)*, and that the sesquilinear and continuous form b satisfies the inf-sup condition* (4.10) *for some $\beta > 0$. Finally, assume that the spaces $\mathcal{K}$ and $\mathcal{K}^\perp$ satisfy a double orthogonality property in $\mathcal{V}$ and $\mathcal{H}_2$, as in Definition 4.3.17. Let $\mathcal{L}$ be the closure of $\mathcal{K}$ in $\mathcal{H}$.*

Then, let $T > 0$, $\mathtt{f} \in C^0([0,T];\mathcal{H})$, $\mathtt{g} \in C^2([0,T];\mathcal{Q}')$, $\mathtt{u}_0 \in \mathcal{V}$ and $\mathtt{u}_1 \in \mathcal{H}$ be given, such that the projection $\mathtt{u}_{1\perp}$ of $\mathtt{u}_1$ onto $\mathcal{L}^\perp$ belongs to $\mathcal{V}$, and

$$\forall \mathtt{q} \in \mathcal{Q},\ b(\mathtt{u}_0,q) = \langle \mathtt{g}(0),q\rangle_{\mathcal{Q}},\ \textit{and } b(\mathtt{u}_{1\perp},q) = \langle \mathtt{g}'(0),q\rangle_{\mathcal{Q}}. \tag{4.22}$$

On the time interval $]0,T[$, Problem (4.21) *admits a unique weak solution in the sense of Definition 4.3.16 (with $\big({}_2(\mathtt{u}(t),\mathtt{v})_{\mathcal{H}}\big)''$ in (iii)). In addition, the mapping*

$$\begin{cases} C^0([0,T];\mathcal{H}) \times C^2([0,T];\mathcal{Q}') \times \mathcal{V} \times \mathcal{H} \to C^0([0,T];\mathcal{V} \times \mathcal{H} \times \mathcal{Q}) \\ (\mathtt{f}, \mathtt{g}, \mathtt{u}_0, \mathtt{u}_1) \qquad\qquad\qquad\qquad\qquad \mapsto (\mathtt{u}, \mathtt{u}', \mathtt{p}) \end{cases}$$

is continuous (with a constant that depends on T).

Proof. Without loss of generality, we may assume ${}_2(\cdot,\cdot)_{\mathcal{H}} = (\cdot,\cdot)_{\mathcal{H}}$, by reasoning as in Corollary 4.3.15 if necessary. Then, we proceed by analysis and synthesis. Suppose there exists a solution $(\mathtt{u}, \mathtt{p})$ in the sense of Definition 4.3.16; and split $\mathtt{u}(t) = \mathtt{u}_\parallel(t) + \mathtt{u}_\perp(t) \in \mathcal{K} \oplus \mathcal{K}^\perp$ for all $t \in [0,T]$. As the projection onto closed subspaces is continuous, it holds that $(\mathtt{u}_\parallel, \mathtt{u}_\perp) \in C^0([0,T];\mathcal{K}\times\mathcal{K}^\perp)\times C^1([0,T];\mathcal{L}\times\mathcal{L}^\perp)$. Similarly, let $\mathtt{u}_0 = \mathtt{u}_{0\parallel} + \mathtt{u}_{0\perp} \in \mathcal{K}\oplus\mathcal{K}^\perp$; $\mathtt{u}_1 = \mathtt{u}_{1\parallel} + \mathtt{u}_{1\perp} \in \mathcal{L} \oplus \mathcal{L}^\perp$; $\mathtt{f} = \mathtt{f}_\parallel + \mathtt{f}_\perp \in C^0([0,T];\mathcal{L} \times \mathcal{L}^\perp)$.

1. Item (iv) of Definition 4.3.16 is equivalent to: $\forall t \in [0,T]$, $\forall \mathtt{q} \in \mathcal{Q}$, $b(\mathtt{u}_\perp(t), \mathtt{q}) = \langle \mathtt{g}(t), \mathtt{q}\rangle$. By Lemma 4.2.18, we know this equation has a unique solution for each t. Moreover, one has $\beta\|\mathtt{u}_\perp(t)\|_V \le \|\mathtt{g}(t)\|_{Q'}$, and similar inequalities link the first and second time derivatives of $\mathtt{u}_\perp$ and $\mathtt{g}$: the norm of $\mathtt{u}$ in $C^2([0,T];\mathcal{K}^\perp)$ is controlled by that of $\mathtt{g}$ in $C^2([0,T];\mathcal{Q}')$.
2. Then, let us take a test function $\mathtt{v}_\parallel \in \mathcal{K}$ in item (iii). Using the definition of $\mathcal{K}$ and the double orthogonality property, we obtain:

$$\forall \mathtt{v}_\parallel \in \mathcal{K}, \quad \frac{d^2}{dt^2}\{(\mathtt{u}_\parallel(t), \mathtt{v}_\parallel)_{\mathcal{H}}\} + a(\mathtt{u}_\parallel(t), \mathtt{v}_\parallel) = (\mathtt{f}_\parallel(t), \mathtt{v}_\parallel)_{\mathcal{H}} \text{ in } \mathcal{D}'(]0,T[).$$

   But, by the same property, $(\mathtt{u}_\parallel(t), \mathtt{v}_\perp)_{\mathcal{H}} = a(\mathtt{u}_\parallel(t), \mathtt{v}_\perp) = 0$ for any $\mathtt{v}_\perp \in \mathcal{K}^\perp$. Therefore, we can add an arbitrary function $\mathtt{v}_\perp \in \mathcal{K}^\perp$ to $\mathtt{v}_\parallel$ in the above equation. So, we see that $\mathtt{u}_\parallel$ appears as a solution to the variational formulation:
   Find $\mathtt{u}_\parallel : [0,T] \to \mathcal{V}$ *such that:*

$$\forall \mathtt{v} \in \mathcal{V}, \quad \frac{d^2}{dt^2}\{(\mathtt{u}_\parallel(t), \mathtt{v})_{\mathcal{H}}\} + a(\mathtt{u}_\parallel(t), \mathtt{v}) = (\mathtt{f}_\parallel(t), \mathtt{v})_{\mathcal{H}} \text{ in } \mathcal{D}'(]0,T[),$$

   with the initial conditions $\mathtt{u}_\parallel(0) = \mathtt{u}_{0\parallel}$, $\mathtt{u}'_\parallel(0) = \mathtt{u}_{1\parallel}$. Thus, it coincides with the unique weak solution to this formulation in the sense of Definition 4.3.12. Following the same line of reasoning, one shows that this solution does belong to $\mathcal{K}$ at any time; furthermore, its norm in $C^0([0,T];\mathcal{V})\times C^1([0,T];\mathcal{H})$ depends continuously on the data $(\mathtt{f}_\parallel, \mathtt{u}_{0\parallel}, \mathtt{u}_{1\parallel})$, which are themselves controlled by $(\mathtt{f}, \mathtt{u}_0, \mathtt{u}_1)$ in their respective spaces.
3. Now, consider $\mathtt{v} \in \mathcal{V}$ and write $\mathtt{v} = \mathtt{v}_\parallel + \mathtt{v}_\perp$, with $(\mathtt{v}_\parallel, \mathtt{v}_\perp) \in \mathcal{K} \times \mathcal{K}^\perp$. Using the characterisation of $\mathtt{u}_\parallel$ obtained in step 2, together with the double orthogonality property and footnote[11], p. 156, one finds that

$$\begin{aligned} &(\mathtt{f}(t), \mathtt{v})_{\mathcal{H}} - \frac{d^2}{dt^2}\{(\mathtt{u}(t), \mathtt{v})_{\mathcal{H}}\} - a(\mathtt{u}(t), \mathtt{v}) = \\ &(\mathtt{f}_\perp(t), \mathtt{v}_\perp)_{\mathcal{H}} - \frac{d^2}{dt^2}\{(\mathtt{u}(t)_\perp, \mathtt{v}_\perp)_{\mathcal{H}}\} - a(\mathtt{u}_\perp(t), \mathtt{v}_\perp) \text{ in } \mathcal{D}'(]0,T[). \end{aligned}$$

   Let us define $\mathtt{h}(t) \in \mathcal{V}'$, for all t, by the condition:

$$\forall \mathtt{v} \in \mathcal{V}, \quad \langle \mathtt{h}(t), \mathtt{v}\rangle_{\mathcal{V}} = (\mathtt{f}_\perp(t), \mathtt{v}_\perp)_{\mathcal{H}} - (\mathtt{u}''_\perp(t), \mathtt{v}_\perp)_{\mathcal{H}} - a(\mathtt{u}_\perp(t), \mathtt{v}_\perp). \quad (4.23)$$

Thanks to the assumptions on the data and to the preceding results, we have $\mathtt{h} \in C^0([0,T];\mathcal{K}^0)$, where $\mathcal{K}^0$ is the polar set of $\mathcal{K}$. Using Lemma 4.2.18 once more, we conclude that

$$\exists! \mathtt{p} \in C^0([0,T];\mathcal{Q}),\ \forall t \in [0,T],\ \forall \mathtt{v} \in \mathcal{V},\ \overline{b(\mathtt{v}, \mathtt{p}(t))} = \langle \mathtt{h}(t), \mathtt{v}\rangle_{\mathcal{V}}. \quad (4.24)$$

Moreover, the norm of $\mathtt{p}$ in $C^0([0,T];\mathcal{Q})$ depends continuously on the data $(\mathtt{f}, \mathtt{g}, \mathtt{u}_0, \mathtt{u}_1)$.

4. Conversely, let $\mathtt{u} = \mathtt{u}_\parallel + \mathtt{u}_\perp$, where $\mathtt{u}_\perp$ and $\mathtt{u}_\parallel$ are defined as in steps 1 and 2, and let $\mathtt{p}$ be defined by (4.24) and (4.23). They fulfill all items of Definition 4.3.16, including the initial conditions thanks to (4.22). What is more, the norm of $(\mathtt{u}, \mathtt{u}', \mathtt{p})$ in $C^0([0,T];\mathcal{V}\times\mathcal{H}\times\mathcal{Q})$ depends continuously on the data $(\mathtt{f}, \mathtt{g}, \mathtt{u}_0, \mathtt{u}_1)$.

■

Remark 4.3.20 *As in the case without constraints (cf. Theorem 4.3.13), one can have weaker time regularity assumptions on the right-hand sides, namely* $\mathtt{f} \in L^2(0,T;\mathcal{H})$ *and* $\mathtt{g} \in H^2([0,T];\mathcal{Q}')$*. But one only finds that* $\mathtt{p} \in L^2(0,T;\mathcal{Q})$*. Weaker space regularities can be also envisaged, under certain assumptions about the various spaces and sesquilinear forms (see below).*

Remark 4.3.21 *Let us comment on the* double orthogonality *requirement.*

- *According to Remark 4.3.8, one can replace the scalar product* $(\mathtt{v}, \mathtt{w})_{\mathcal{V}}$ *with* ${}_2(\mathtt{v}, \mathtt{w})_{\mathcal{V}} = a(\mathtt{v}, \mathtt{w}) + \nu_2\, {}_2(\mathtt{v}, \mathtt{w})_{\mathcal{H}}$*, with* $\nu_2 > 0$*. Hence the denomination* double orthogonality *with respect to* ${}_2(\cdot,\cdot)_{\mathcal{V}}$*:*
  for all $(\mathtt{v}_\parallel, \mathtt{v}_\perp) \in \mathcal{K} \times \mathcal{K}^\perp$*, one expects* $a(\mathtt{v}_\parallel, \mathtt{v}_\perp) + \nu_2\, {}_2(\mathtt{v}_\parallel, \mathtt{v}_\perp)_{\mathcal{H}} = 0$*, whereas we require* both $a(\mathtt{v}_\parallel, \mathtt{v}_\perp) = 0$ and ${}_2(\mathtt{v}_\parallel, \mathtt{v}_\perp)_{\mathcal{H}} = 0$.
- *The part* $(\mathtt{v}_\parallel, \mathtt{v}_\perp) \in \mathcal{K} \times \mathcal{K}^\perp \Longrightarrow a(\mathtt{v}_\parallel, \mathtt{v}_\perp) = 0$ *is required, because one cannot deal with a right-hand side of the form* $a(\mathtt{w}(t), \mathtt{v})$ *— in our case, with* $\mathtt{w} = \mathtt{u}_\perp$ *and* $\mathtt{v} = \mathtt{v}_\parallel$ *— when solving the second-order time-dependent problem in* $\mathcal{V}$*([12]).*

The result of Theorem 4.3.19 is not entirely satisfactory: as it appears from the proof, the part of the solution that is orthogonal to the kernel is much more regular than the one along the kernel. To address this dissymmetry, one can try to define suitable extensions of the operator $\mathtt{B}$, and thus consider less regular data $\mathtt{g}$. For instance, introduce the spaces:

$$\mathcal{Q}_w := \{\mathtt{q} \in \mathcal{Q} : \mathtt{B}^\dagger \mathtt{q} \in \mathcal{H}\}, \quad \mathcal{Q}_{ww} := \{\mathtt{q} \in \mathcal{Q} : \mathtt{B}^\dagger \mathtt{q} \in \mathcal{V}\}, \quad (4.25)$$

[12] Unless $\mathtt{g}(t)$ is appropriately regular. More precisely, see (4.27-top) below: $\mathtt{g}(t)$ should be regular enough, so that the second term on the right-hand side can be included in the first term by suitably modifying $\mathtt{f}(t)$.

endowed with their canonical norms. For any $\mathtt{q} \in \mathcal{Q}_w$, the continuous antilinear form on $\mathcal{V}$ given by $\mathtt{v} \mapsto b(\mathtt{v}, \mathtt{q})$ can be extended to a continuous antilinear form on $\mathcal{H}$. Thus, we have defined a continuous sesquilinear form b_w on $\mathcal{H} \times \mathcal{Q}_w$, which coincides with $b(\cdot,\cdot)$ on $\mathcal{V} \times \mathcal{Q}_w$, as well as an extended operator $\mathtt{B}_w : \mathcal{H} \to \mathcal{Q}'_w$ and its conjugate transpose $\mathtt{B}^\dagger_w : \mathcal{Q}_w \to \mathcal{H}' = \mathcal{H}$. Similarly, one defines the sesquilinear form b_{ww} on $\mathcal{V}' \times \mathcal{Q}_{ww}$ and the operators $\mathtt{B}_{ww} : \mathcal{V}' \to \mathcal{Q}'_{ww}$ and $\mathtt{B}^\dagger_{ww} : \mathcal{Q}_{ww} \to \mathcal{V}'' = \mathcal{V}$.

Theorem 4.3.22 *Assume that the sesquilinear, continuous and Hermitian form a fulfills the property* (4.15)*, and that the sesquilinear and continuous form b satisfies the inf-sup condition* (4.10) *for some $\beta > 0$. Assume, moreover, that the sesquilinear and continuous forms b_w and b_{ww} satisfy similar inf-sup conditions in the relevant spaces; and that the double orthogonality property in $\mathcal{V}$ and $\mathcal{H}_2$ holds.*

Then, let $T > 0$, $\mathtt{f} \in C^0([0,T];\mathcal{H})$, $\mathtt{g} \in \mathcal{G}_T := C^0([0,T];\mathcal{Q}') \cap C^1([0,T];\mathcal{Q}'_w) \cap C^2([0,T];\mathcal{Q}'_{ww})$, $\mathtt{u}_0 \in \mathcal{V}$ and $\mathtt{u}_1 \in \mathcal{H}$ be given such that

$$\forall \mathtt{q} \in \mathcal{Q},\ b(\mathtt{u}_0, q) = \langle \mathtt{g}(0), q\rangle_{\mathcal{Q}}\,;\ \forall \mathtt{q} \in \mathcal{Q}_w,\ b_w(\mathtt{u}_1, q) = \langle \mathtt{g}'(0), q\rangle_{\mathcal{Q}_w}. \tag{4.26}$$

On the time interval $]0,T[$, Problem (4.21) *admits a unique weak solution in the sense of Definition 4.3.16 (with $\big({}_2(\mathtt{u}(t), \mathtt{v})_{\mathcal{H}}\big)''$ in (iii)). In addition, the mapping*

$$\begin{cases} C^0([0,T];\mathcal{H}) \times \mathcal{G}_T \times \mathcal{V} \times \mathcal{H} \to C^0([0,T];\mathcal{V} \times \mathcal{H} \times \mathcal{Q}) \\ (\mathtt{f}, \mathtt{g}, \mathtt{u}_0, \mathtt{u}_1) \qquad\qquad\qquad\qquad \mapsto (\mathtt{u}, \mathtt{u}', \mathtt{p}) \end{cases}$$

is continuous (with a constant that depends on T).

The proof is entirely similar to that of Theorem 4.3.19.

Remark 4.3.23 *Let us comment on these regularity assumptions.*

- *As in Remark 4.3.20, it is sufficient to assume $\mathtt{f} \in L^2(0,T;\mathcal{H})$ and $\mathtt{g} \in C^0([0,T];\mathcal{Q}') \cap C^1([0,T];\mathcal{Q}'_w) \cap H^2([0,T];\mathcal{Q}'_{ww})$ in order to have a well-posed evolution equation for $\mathtt{u}_\parallel$ and an equation for $\mathtt{p}(t)$ at a.e. t; in this case, it holds that $\mathtt{p} \in L^2(0,T;\mathcal{Q})$.*
- *The inf-sup condition on the form b_w allows one to prove the condition $\mathtt{u}_\perp \in C^1([0,T];\mathcal{H})$, which is expected of a weak solution. By the same token, it expresses the compatibility between the initial condition $\mathtt{u}_1$ and the constraint $b(\mathtt{u}, \mathtt{q}) = \langle \mathtt{g}, \mathtt{q}\rangle$. It also implies that $\mathcal{L}$ is the kernel of $b_w(\cdot,\cdot)$.*
- *On the other hand, the form b_{ww} plays a marginal role. Its inf-sup condition ensures $\mathtt{u}_\perp \in C^2([0,T];\mathcal{V}')$ or $H^2([0,T];\mathcal{V}')$, so that the r.h.s. of* (4.23) *is well-defined for a.e. t. If this condition is unavailable, one can still conclude favorably under the assumption $\mathtt{g} \in C^0([0,T];\mathcal{Q}') \cap C^2([0,T];\mathcal{Q}'_w)$ or $\mathtt{g} \in C^0([0,T];\mathcal{Q}') \cap H^2([0,T];\mathcal{Q}'_w)$.*

To conclude this subsection, we introduce a reinterpretation of the equations satisfied by $\mathtt{u}_\perp$ and $\mathtt{u}_\parallel$, which also proves useful in analyzing the numerical

discretizations of Problem (4.21) [82]. According to item 1. in the proof of Theorem 4.3.19, the variable $\mathtt{u}_\perp$ is the solution, at any time, to the static mixed formulation:

$$\begin{cases} \textit{Find } (\mathtt{u}_\perp, \mathtt{p}_\perp) \textit{ such that} \\ \forall t \in [0,T],\ \forall \mathtt{q} \in \mathcal{Q},\ b(\mathtt{u}_\perp(t), \mathtt{q}) = \langle \mathtt{g}(t), \mathtt{q} \rangle_{\mathcal{Q}}, \\ \forall \mathtt{v} \in \mathcal{V},\ a(\mathtt{u}_\perp(t), \mathtt{v}) + \overline{b(\mathtt{v}, \mathtt{p}_\perp(t))} = \langle \mathtt{A}_w \, \mathtt{B}^{-1}_{|_{\mathcal{K}^\perp}} \, \mathtt{g}(t), \mathtt{v} \rangle_{\mathcal{V}} \text{ in } \mathcal{D}'(]0,T[)\,; \\ \mathtt{u}_\perp(0) = \mathtt{u}_{0\perp}\ ,\ \dfrac{d\mathtt{u}_\perp}{dt}(0) = \mathtt{u}_{1\perp}. \end{cases}$$

Indeed, the operator $\mathtt{B}$ *restricted to* $\mathcal{K}^\perp$ admits a continuous inverse $\mathtt{B}^{-1}_{|_{\mathcal{K}^\perp}} : \mathcal{Q}' \to \mathcal{K}^\perp$. By the uniqueness of the solution to the constrained formulation, it holds that $\mathtt{p}_\perp(t) = 0$. As for $\mathtt{u}_\parallel$, it is the solution to the following time-dependent formulation, where $\mathtt{u}_\perp$ enters as data and $\mathtt{p}_\parallel = \mathtt{p}$:

$$\begin{cases} \textit{Find } (\mathtt{u}_\parallel, \mathtt{p}_\parallel) \textit{ such that} \\ \forall \mathtt{v} \in \mathcal{V},\ \dfrac{d^2}{dt^2}\{{}_2(\mathtt{u}_\parallel(t), \mathtt{v})_{\mathcal{H}}\} + a(\mathtt{u}(t), \mathtt{v}) + \overline{b(\mathtt{v}, \mathtt{p}_\parallel(t))} = \\ (\mathtt{f}(t), \mathtt{v})_{\mathcal{H}} - \langle \mathtt{A}_w \, \mathtt{B}^{-1}_{|_{\mathcal{K}^\perp}} \, \mathtt{g}(t), \mathtt{v} \rangle_{\mathcal{V}} - \dfrac{d^2}{dt^2}\{{}_2(\mathtt{u}_\perp(t), \mathtt{v})_{\mathcal{H}}\} \text{ in } \mathcal{D}'(]0,T[), \\ \forall \mathtt{q} \in \mathcal{Q}, \quad b(\mathtt{u}_\parallel(t), \mathtt{q}) = 0 \text{ in } C^0([0,T]) \text{ respectively } L^2(0,T)\,; \\ \mathtt{u}_\parallel(0) = \mathtt{u}_{0\parallel}\ ,\ \dfrac{d\mathtt{u}_\parallel}{dt}(0) = \mathtt{u}_{1\parallel}. \end{cases} \tag{4.27}$$

4.4 Time-dependent problems: improved regularity results

We now investigate the conditions under which the solution to the second-order time-dependent problems (4.14), (4.17), (4.21) (and their variants) may exhibit a higher regularity in space and time, such as that needed for the numerical analysis [19]. In addition to the hypotheses of §4.3, we assume that the canonical imbedding $i_{\mathcal{V}\to\mathcal{H}}$ is *compact*.

To simplify the discussion, we shall assume in this section that the form a appearing in these problems is (Hermitian and) coercive on the whole space $\mathcal{V}$, i.e., the property (4.15) holds with $\nu = 0$. As a consequence, we replace the original norm of $\mathcal{V}$ with the equivalent norm ${}_2\|\mathtt{v}\|_{\mathcal{V}} := a(\mathtt{v}, \mathtt{v})^{1/2}$, usually called the *energy norm*, which we will denote by $\|\mathtt{v}\|_{\mathcal{V}}$ for the sake of simplicity.

4.4.1 Problems without constraints

First, we introduce the eigenvalue problem:[13]

$$\begin{cases} \textit{Find } (\mathtt{e}, \lambda) \in (\mathcal{V} \setminus \{0\}) \times \mathbb{R} \textit{ such that} \\ \forall \mathtt{v} \in \mathcal{V},\ a(\mathtt{e}, \mathtt{v}) = \lambda\, (\mathtt{e}, \mathtt{v})_{\mathcal{H}}. \end{cases} \tag{4.28}$$

[13] Cf. the discussion in footnote[6], p. 143.

According to Corollary 4.5.12, there exist a non-decreasing sequence of strictly positive eigenvalues $(\lambda_i)_{i\in\mathbb{N}}$ and a sequence of eigenfunctions $(\mathtt{e}_i)_{i\in\mathbb{N}}$ that are a Hilbert basis of $\mathcal{H}$ and such that $(\lambda_i^{-1/2}\,\mathtt{e}_i)_{i\in\mathbb{N}}$ is a Hilbert basis for $\mathcal{V}$. This leads to the definition of a scale $(\mathcal{V}^s)_{s\in\mathbb{R}}$ of Hilbert spaces, the $\mathtt{A}$-*Sobolev spaces*.

Definition 4.4.1 *Let $s \in \mathbb{R}$. The space $\mathcal{V}^s$ is:*

- *if $s \geq 0$, the subspace of $\mathcal{H}$ characterised by the condition*

$$\sum_{i\in\mathbb{N}} u_i\,\mathtt{e}_i = \mathtt{u} \in \mathcal{V}^s \iff \|\mathtt{u}\|^2_{\mathcal{V}^s} := \sum_{i\in\mathbb{N}} \lambda_i^s\,|u_i|^2 < +\infty, \tag{4.29}$$

  which defines its canonical norm;
- *if $s < 0$, the dual of $\mathcal{V}^{-s}$ with respect to the pivot space $\mathcal{H}$.*

Then, we summarise some properties of this scale. The proofs are left to the reader.

Proposition 4.4.2 *The following statements hold true:*

1. *$\mathcal{V}^0 = \mathcal{H}$, $\mathcal{V}^1 = \mathcal{V}$, $\mathcal{V}^2 = D(\mathtt{A})$, $\mathcal{V}^{-1} = \mathcal{V}'$, algebraically and topologically.*
2. *For all $i \in \mathbb{N}$ and $s \in \mathbb{R}$, $\mathtt{e}_i \in \mathcal{V}^s$. Furthermore, the sequence $(\mathtt{e}_i^s)_{i\in\mathbb{N}} := (\lambda_i^{-s/2}\,\mathtt{e}_i)_{i\in\mathbb{N}}$ is a Hilbert basis for $\mathcal{V}^s$.*
3. *For all $t \leq s \in \mathbb{R}$, $\mathcal{V}^s$ is densely and compactly embedded in $\mathcal{V}^t$.*
4. *Let $s \in \mathbb{R}$ and $u \in \mathcal{V}^s$. The scalar u_i equivalently defined as*

$$u_i = \left\langle \mathtt{u}, \mathtt{e}_i^{-t} \right\rangle_{\mathcal{V}^{-t}} = \lambda_i^{-t/2}\,\left(\mathtt{u}, \mathtt{e}_i^t\right)_{\mathcal{V}^t}$$

   does not depend on $t \leq s$. Of course, if $\mathtt{u} \in \mathcal{H}$, u_i coincides with the coordinate of $\mathtt{u}$ on the basis $(\mathtt{e}_i)_{i\in\mathbb{N}}$.
5. *As a consequence of items 2 and 4, an element of an $\mathtt{A}$-Sobolev space admits a* renormalised *expansion $\mathtt{u} = \sum_{i\in\mathbb{N}} u_i\,\mathtt{e}_i$, which converges in $\mathcal{V}^s$ under the condition* (4.29).

With these results, one can define a natural generalisation of the "strong" and "weak" operators $\mathtt{A}$ and $\mathtt{A}_w$. The "formal" unbounded operator

$$\tilde{\mathtt{A}}: \quad \mathtt{u} = \sum_{i\in\mathbb{N}} u_i\,\mathtt{e}_i \longmapsto \sum_{i\in\mathbb{N}} \lambda_i\,u_i\,\mathtt{e}_i$$

makes sense as soon as $\mathtt{u}$ belongs to some $\mathtt{A}$-Sobolev space. By construction, it maps $\mathcal{V}^s$ to $\mathcal{V}^{s-2}$ for all s, and it is an isometry between these spaces. As particular cases, $\mathtt{A}$ and $\mathtt{A}_w$ appear as the restrictions of $\tilde{\mathtt{A}}$ to $D(\mathtt{A})$ and $\mathcal{V}$, respectively.

We are now ready to analyse a generalised version of Problem (4.14), namely:

$$\begin{cases} \textit{Find } \mathtt{u} \textit{ such that} \\ \dfrac{d^2\mathtt{u}}{dt^2} + \tilde{\mathtt{A}}\mathtt{u} = \mathtt{f}, \quad t > 0\,; \\ \mathtt{u}(0) = \mathtt{u}_0\ ,\ \dfrac{d\mathtt{u}}{dt}(0) = \mathtt{u}_1. \end{cases} \tag{4.30}$$

The above problem is meaningful as soon as $\mathtt{u}$ has the regularity $C^1([0,T];\mathcal{V}^\sigma)$, and $f \in L^1_{loc}(]0,T[\,;\mathcal{V}^s)$, for some $\sigma,\ s \in \mathbb{R}$: the equality on the first line takes place in $\mathcal{D}'(]0,T[\,;\mathcal{V}^{\min(\sigma-2,s)})$. As particular cases, this covers the frameworks of Definitions 4.3.9 and 4.3.12. Considering the renormalised expansions at each time

$$\mathtt{u}(t) = \sum_{i\in\mathbb{N}} u_i(t)\,\mathtt{e}_i, \quad \mathtt{u}_m = \sum_{i\in\mathbb{N}} u_{m,i}\,\mathtt{e}_i\ (m=0,\ 1), \quad \mathtt{f}(t) = \sum_{i\in\mathbb{N}} f_i(t)\,\mathtt{e}_i,$$

Problem (4.30) is equivalent to the sequence of Cauchy problems in $\mathcal{D}'(]0,T[)$ (for $i \in \mathbb{N}$):

$$\begin{cases} \textit{Find } u_i \textit{ such that} \\ \dfrac{d^2u_i}{dt^2} + \lambda_i\, u_i = f_i,\ t \in]0,T[\,;\ u_i(0) = u_{0,i}\ ,\ \dfrac{du_i}{dt}(0) = u_{1,i}. \end{cases}$$

The theory of ordinary differential equations gives us the unique solution:

$$u_i(t) = u_{0,i}\,\cos(\sqrt{\lambda_i}t) + \frac{u_{1,i}}{\sqrt{\lambda_i}}\,\sin(\sqrt{\lambda_i}t) + \int_0^t \sin(\sqrt{\lambda_i}(t-s))\,\frac{f_i(s)}{\sqrt{\lambda_i}}\,ds,$$

which exists, e.g., under the condition $f_i \in L^1(0,T)$. If $f_i \in W^{1,1}(0,T)$, one can perform an integration by parts and arrive at:

$$\begin{aligned} u_i(t) = u_{0,i}\,\cos(\sqrt{\lambda_i}t) + \frac{u_{1,i}}{\sqrt{\lambda_i}}\,\sin(\sqrt{\lambda_i}t) + \frac{f(t) - f(0)\,\cos(\sqrt{\lambda_i}t)}{\lambda_i} \\ - \int_0^t \cos(\sqrt{\lambda_i}(t-s))\,\frac{f_i'(s)}{\lambda_i}\,ds. \end{aligned}$$

Using these representations and Proposition 4.4.2, it is not difficult to prove the following theorem, which furnishes solutions both *less* regular and *more* regular *in space* than the strong and weak solutions considered so far.

Theorem 4.4.3 *Assume that the canonical imbedding $i_{\mathcal{V}\to\mathcal{H}}$ is compact, and that the sesquilinear, continuous and Hermitian form a fulfills property* (4.15) *with $\nu = 0$, and let the operator $\tilde{\mathtt{A}}$ be defined as above. Then:*

1. *Given $T > 0$, $s \in \mathbb{R}$, $p \geq 1$ $f \in L^p(0,T;\mathcal{V}^s)$, $\mathtt{u}_0 \in \mathcal{V}^{s+1}$ and $\mathtt{u}_1 \in \mathcal{V}^s$, on the time interval $]0,T[$, Problem* (4.30) *admits a unique solution in $C^1([0,T];\mathcal{V}^s) \cap C^0([0,T];\mathcal{V}^{s+1})$. In addition,*

$$\begin{cases} L^1(0,T;\mathcal{V}^s) \times \mathcal{V}^{s+1} \times \mathcal{V}^s \to C^0([0,T];\mathcal{V}^{s+1}) \times C^0([0,T];\mathcal{V}^s) \\ (\mathtt{f},\mathtt{u}_0,\mathtt{u}_1) \qquad\qquad\qquad\qquad \mapsto (\mathtt{u},\mathtt{u}') \end{cases}$$

is continuous (with a constant that depends on T), and $\mathtt{u} \in W^{2,p}(0,T;\mathcal{V}^{s-1})$, with continuous dependence.

2. *Given $T > 0$, $s \in \mathbb{R}$, $f \in \mathcal{Z}_T^s := L^1(0,T;\mathcal{V}^s) \cap C^0([0,T];\mathcal{V}^{s-1})$, respectively, $W^{1,1}(0,T;\mathcal{V}^{s-1})$, $\mathtt{u}_0 \in \mathcal{V}^{s+1}$ and $\mathtt{u}_1 \in \mathcal{V}^s$, on the time interval $]0,T[$, Problem (4.30) admits a unique solution in $C^2([0,T];\mathcal{V}^{s-1}) \cap C^1([0,T];\mathcal{V}^s) \cap C^0([0,T];\mathcal{V}^{s+1})$. In addition,*

$$\begin{cases} \mathcal{Z}_T^s \times \mathcal{V}^{s+1} \times \mathcal{V}^s \to C^0([0,T];\mathcal{V}^{s+1}) \times C^0([0,T];\mathcal{V}^s) \times C^0([0,T];\mathcal{V}^{s-1}) \\ (\mathtt{f},\mathtt{u}_0,\mathtt{u}_1) \qquad\qquad \mapsto (\mathtt{u},\mathtt{u}',\mathtt{u}'') \end{cases}$$

is continuous (with a constant that depends on T).

Now, we investigate the *time* regularity of the solutions to (4.30).

Theorem 4.4.4 *Assume the hypotheses of Theorem 4.4.3, and let $m \in \mathbb{N}$ be given. Suppose that $\mathtt{u}_m$ and $\mathtt{u}_{m+1}$ (defined, according to the parity of m, by the formulas (4.32) and (4.33) below) belong, respectively, to $\mathcal{V}^{s+1}$ and $\mathcal{V}^s$.*

1. *If $\mathtt{f} \in W^{m,p}(0,T;\mathcal{V}^s)$, the solution to Problem (4.30) belongs to $W^{m+2,p}(0,T;\mathcal{V}^{s-1}) \cap C^{m+1}([0,T];\mathcal{V}^s) \cap C^m([0,T];\mathcal{V}^{s+1})$, with continuous dependence on the data $(\mathtt{f},\mathtt{u}_m,\mathtt{u}_{m+1})$.*
2. *If either $\mathtt{f} \in W^{m,1}(0,T;\mathcal{V}^s) \cap C^m([0,T];\mathcal{V}^{s-1})$ or $\mathtt{f} \in W^{m+1,1}(0,T;\mathcal{V}^{s-1})$, the solution to Problem (4.30) belongs to $C^{m+2}([0,T];\mathcal{V}^{s-1}) \cap C^{m+1}([0,T];\mathcal{V}^s) \cap C^m([0,T];\mathcal{V}^{s+1})$, with continuous dependence on the data $(\mathtt{f},\mathtt{u}_m,\mathtt{u}_{m+1})$.*

Proof. We prove the first claim; the second is similar. The case $m = 0$ is that of Theorem 4.4.3. Thus, we suppose $m \geq 1$, and we have $\mathtt{f} \in C^{m-1}([0,T];\mathcal{V}^s)$. Using the identity $\mathtt{u}'' = \mathtt{f} - \tilde{\mathtt{A}}\mathtt{u}$ iteratively, one arrives at the following expressions and regularities of the successive time derivatives of $\mathtt{u}$:

$$\mathtt{u}^{(2k)} = \sum_{\ell=0}^{k-1} (-1)^\ell\, \tilde{\mathtt{A}}^\ell \mathtt{f}^{(2k-2\ell-2)} + (-1)^k\, \tilde{\mathtt{A}}^k \mathtt{u} \;\in\; C^0([0,T];\mathcal{V}^{s-2k+1})\,,$$

$$\mathtt{u}^{(2k+1)} = \sum_{\ell=0}^{k-1} (-1)^\ell\, \tilde{\mathtt{A}}^\ell \mathtt{f}^{(2k-2\ell-1)} + (-1)^k\, \tilde{\mathtt{A}}^k \mathtt{u}' \;\in\; C^0([0,T];\mathcal{V}^{s-2k})\,,$$

as long as $2k-2$, respectively $2k-1 \leq m-1$. Thus, in any case, $\mathtt{u}^{(m)} \in C^1([0,T];\mathcal{V}^{s-m}) \cap C^0([0,T];\mathcal{V}^{s-m+1})$.

On the other hand, consider the generalised second-order problem:

$$\begin{cases} \textit{Find } \mathtt{v} \textit{ such that} \\ \dfrac{d^2\mathtt{v}}{dt^2} + \tilde{\mathtt{A}}\mathtt{v} = \mathtt{f}^{(m)}, \quad t > 0\,; \\ \mathtt{v}(0) = \mathtt{u}_m\,,\ \dfrac{d\mathtt{v}}{dt}(0) = \mathtt{u}_{m+1}, \end{cases} \tag{4.31}$$

where the initial conditions are defined by the formula

$$\mathtt{u}_{2k} = \sum_{\ell=0}^{k-1} (-1)^\ell\, \tilde{\mathtt{A}}^\ell \mathtt{f}^{(2k-2\ell-2)}(0) + (-1)^k\, \tilde{\mathtt{A}}^k \mathtt{u}_0\,; \tag{4.32}$$

$$\mathtt{u}_{2k+1} = \sum_{\ell=0}^{k-1} (-1)^\ell\, \tilde{\mathtt{A}}^\ell \mathtt{f}^{(2k-2\ell-1)}(0) + (-1)^k\, \tilde{\mathtt{A}}^k \mathtt{u}_1\,. \tag{4.33}$$

According to the previous calculations, $\mathtt{u}_m \in \mathcal{V}^{s-m+1}$ and $\mathtt{u}_{m+1} \in \mathcal{V}^{s-m}$. As it also holds that $f^{(m)} \in L^p(0,T;\mathcal{V}^{s-m})$, Problem (4.31) admits a unique solution in the space $C^1([0,T];\mathcal{V}^{s-m}) \cap C^0([0,T];\mathcal{V}^{s-m+1})$, which is obviously equal to $\mathtt{u}^{(m)}$.

Assume now that $(\mathtt{u}_m, \mathtt{u}_{m+1}) \in \mathcal{V}^{s+1} \times \mathcal{V}^s$. Again invoking Theorem 4.4.3, we see that Problem (4.31) also admits a unique solution in the *smaller* space $C^1([0,T];\mathcal{V}^s) \cap C^0([0,T];\mathcal{V}^{s+1})$, which necessarily coincides again with $\mathtt{u}^{(m)}$. Therefore, $\mathtt{u} \in C^{m+1}([0,T];\mathcal{V}^s) \cap C^m([0,T];\mathcal{V}^{s+1})$, as announced. The regularity $\mathtt{u} \in W^{m+2,p}(0,T;\mathcal{V}^{s-1})$ again follows from $\mathtt{u}'' = \mathtt{f} - \tilde{\mathtt{A}}\mathtt{u}$, and the continuous dependence from Theorem 4.4.3. ■

4.4.2 Problems with constraints

Now, we proceed to the framework of constrained problems. We thus consider a sesquilinear form b on $\mathcal{V} \times \mathcal{Q}$, satisfying the inf-sup condition (4.10), its kernel $\mathcal{K}$ and $\mathcal{L}$ is the closure of $\mathcal{K}$ within $\mathcal{H}$. Furthermore, we assume the double orthogonality property of Definition 4.3.17. We begin by deducing two fundamental consequences of this property.

Lemma 4.4.5 *Assume that the sesquilinear, continuous and Hermitian form a fulfills property* (4.15) *with $\nu = 0$, and that the double orthogonality property holds between $\mathcal{V}$ and $\mathcal{H}$. Then, for any $\mathtt{v} \in \mathcal{V}^s$ with $s \geq 0$, its $\mathcal{H}$-orthogonal projections $\mathtt{v}_\parallel \in \mathcal{L}$ and $\mathtt{v}_\perp \in \mathcal{L}^\perp$ belong to $\mathcal{V}^s$, with $\|\mathtt{v}_\parallel\|^2_{\mathcal{V}^s} + \|\mathtt{v}_\perp\|^2_{\mathcal{V}^s} = \|\mathtt{v}\|^2_{\mathcal{V}^s}$.*

Proof. Let $\mathtt{e}$ be a solution to (4.28). Taking a test function $\mathtt{v}_\parallel \in \mathcal{K}$ and using the double orthogonality, one obtains $a(\mathtt{e}_\parallel, \mathtt{v}_\parallel) = \lambda\,(\mathtt{e}_\parallel, \mathtt{v}_\parallel)_{\mathcal{H}}$. Again invoking the double orthogonality, one arrives at:

$$a(\mathtt{e}_\parallel, \mathtt{v}) = \lambda\,(\mathtt{e}_\parallel, \mathtt{v})_{\mathcal{H}}, \quad \forall \mathtt{v} \in \mathcal{V}, \quad \text{and similarly,} \quad a(\mathtt{e}_\perp, \mathtt{v}) = \lambda\,(\mathtt{e}_\perp, \mathtt{v})_{\mathcal{H}}.$$

In other words, the projections onto $\mathcal{K}$ and $\mathcal{K}^\perp$ of any eigenfuction are either an eigenfunction, or zero. Thus, the Hilbert basis $(\mathtt{e}_i)_{i\in\mathbb{N}}$ can be chosen such that all its elements belong either to $\mathcal{K}$ or to $\mathcal{K}^\perp$. Let $I_\parallel$ (respectively $I_\perp$) be the set of indices i such that $\mathtt{e}_i \in \mathcal{K}$ (respectively $\mathtt{e}_i \in \mathcal{K}^\perp$). Then, we have:

$$\forall \mathtt{v} = \sum_{i\in\mathbb{N}} v_i\,\mathtt{e}_i \in \mathcal{H}, \quad \mathtt{v}_\parallel = \sum_{i\in I_\parallel} v_i\,\mathtt{e}_i \quad \text{and} \quad \mathtt{v}_\perp = \sum_{i\in I_\perp} v_i\,\mathtt{e}_i.$$

The conclusion follows using the property (4.29). ■

Lemma 4.4.6 *Assume the hypotheses of Lemma 4.4.5, and introduce the respective subspaces $\mathcal{F}^s \subset \mathcal{Q}'$ and $\mathcal{Q}^s \subset \mathcal{Q}$ (for $s \geq 0$), equipped with their canonical norms:*

$$\begin{aligned}\mathcal{F}^s &= \mathtt{B}(\mathcal{V}^{s+2}) = \mathtt{B}(\mathcal{V}^{s+2} \cap \mathcal{K}^\perp),\\ \mathcal{Q}^s &= \{\mathtt{q} \in \mathcal{Q} : \mathtt{B}^\dagger \mathtt{q} \in \mathcal{V}^{s-1}\}.\end{aligned}$$

Then, for any $\mathtt{y} \in \mathcal{V}^s$ *and* $\mu \in \mathcal{F}^s$*, the solution to the problem*

$$\begin{aligned} &\text{Find } (\mathtt{u}, \mathtt{r}) \in \mathcal{V} \times \mathcal{Q} \text{ such that} \\ &\forall \mathtt{v} \in \mathcal{V},\ a(\mathtt{u}, \mathtt{v}) + \overline{b(\mathtt{v}, \mathtt{r})} = (\mathtt{y}, \mathtt{v})_{\mathcal{H}}, && (4.34) \\ &\forall \mathtt{q} \in \mathcal{Q},\ b(\mathtt{u}, \mathtt{q}) = \langle \mu, \mathtt{q} \rangle_{\mathcal{Q}}, && (4.35) \end{aligned}$$

belongs to $\mathcal{V}^{s+2} \times \mathcal{Q}^{s+1}$*, and* $\|\mathtt{u}\|_{\mathcal{V}^{s+2}} + \|\mathtt{r}\|_{\mathcal{Q}^{s+1}} \lesssim \|\mathtt{y}\|_{\mathcal{V}^s} + \|\mu\|_{\mathcal{F}^s}$*.*

Remark 4.4.7 *It holds that:* $\mathcal{Q}^0 = \mathcal{Q}$, $\mathcal{Q}^1 = \mathcal{Q}_w$, $\mathcal{Q}^2 = \mathcal{Q}_{ww}$*, as in Eq.* (4.25)*. The scale* $(\mathcal{F}^s)_s$ *can be extended to* $s \geq -1$*, and even to* $s \geq -2$*, provided the sesquilinear form* b_w *satisfies an inf-sup condition on* $\mathcal{H} \times \mathcal{Q}_w$*:* $\mathcal{F}^s = \mathtt{B}_w(\mathcal{V}^{s+2}) = \mathtt{B}_w(\mathcal{V}^{s+2} \cap \mathcal{L}^\perp)$*; in particular,* $\mathcal{F}^{-1} = \mathtt{B}(\mathcal{V}) = \mathcal{Q}'$ *and* $\mathcal{F}^{-2} = \mathtt{B}_w(\mathcal{H}) = \mathcal{Q}'_w$*.*

Proof. Decompose $\mathtt{u} = \mathtt{u}_\parallel + \mathtt{u}_\perp \in \mathcal{K} \oplus \mathcal{K}^\perp$ and $\mathtt{y} = \mathtt{y}_\parallel + \mathtt{y}_\perp \in \mathcal{L} \oplus \mathcal{L}^\perp$. By definition of $\mathcal{F}^s$, there exists $\tilde{\mathtt{u}} \in \mathcal{V}^{s+2} \cap \mathcal{K}^\perp$ such that $\mathtt{B}\tilde{\mathtt{u}} = \mu$. On the other hand, Eq. (4.35) is equivalent to $\mathtt{B}\mathtt{u}_\perp = \mu$. By Lemma 4.2.18, this equation has a unique solution in $\mathcal{K}^\perp$; hence, $\mathtt{u}_\perp = \tilde{\mathtt{u}}$, and $\|\mathtt{u}_\perp\|_{\mathcal{V}^{s+2}} \lesssim \|\mu\|_{\mathcal{F}^s}$ by definition of the latter norm.

Reasoning as in Lemma 4.4.5, we see that (4.34) implies that

$$a(\mathtt{u}_\parallel, \mathtt{v}) = (\mathtt{y}_\parallel, \mathtt{v})_{\mathcal{H}}, \quad \forall \mathtt{v} \in \mathcal{V}, \quad \text{i.e.,} \quad \mathtt{A}_w \mathtt{u}_\parallel = \mathtt{y}_\parallel \in \mathcal{V}^s.$$

Therefore, $\mathtt{u}_\parallel \in \mathcal{V}^{s+2}$ and $\|\mathtt{u}_\parallel\|_{\mathcal{V}^{s+2}} \lesssim \|\mathtt{y}_\parallel\|_{\mathcal{V}^s} \lesssim \|\mathtt{y}\|_{\mathcal{V}^s}$. Finally, Eq. (4.34) is rewritten as: $\mathtt{B}^\dagger \mathtt{r} = \mathtt{y} - \mathtt{A}\mathtt{u} \in \mathcal{V}^s$, i.e., $\mathtt{r} \in \mathcal{Q}^{s+1}$ and $\|\mathtt{r}\|_{\mathcal{Q}^{s+1}} \lesssim \|\mathtt{y}\|_{\mathcal{V}^s} + \|\mathtt{u}\|_{\mathcal{V}^{s+2}} \lesssim \|\mathtt{y}\|_{\mathcal{V}^s} + \|\mu\|_{\mathcal{F}^s}$. ■

With these tools, one can determine the regularity of the solution to the mixed problem (4.21). We concentrate on solutions *more regular* in space and time than those provided by Theorem 4.3.22 or Remark 4.3.23, which are needed for the numerical analysis [19].

Theorem 4.4.8 *Assume that the canonical imbedding* $i_{\mathcal{V} \to \mathcal{H}}$ *is compact, that the sesquilinear, continuous and Hermitian form* a *fulfills property* (4.15) *with* $\nu = 0$*, that the sesquilinear and continuous form* b *satisfies the inf-sup condition* (4.10) *for some* $\beta > 0$*, that the sesquilinear and continuous form* b_w *satisfies a similar inf-sup condition in* $\mathcal{H} \times \mathcal{Q}_w$*, and that the double orthogonality property holds between* $\mathcal{V}$ *and* $\mathcal{H}$*.*

Let $T > 0$*,* $s \geq 1$*,* $p \geq 1$ *and* $m \in \mathbb{N}$ *be given. Suppose that the data* $(\mathtt{f}, \mathtt{g}, \mathtt{u}_0, \mathtt{u}_1)$ *of Problem* (4.21) *satisfy the following regularity and compatibility properties:*

1. $\mathtt{f} \in W^{m,p}(0, T; \mathcal{V}^s)$*;*
2. $\mathtt{g} \in C^m([0, T]; \mathcal{F}^{s-1}) \cap C^{m+1}([0, T]; \mathcal{F}^{s-2}) \cap W^{m+2,p}(0, T; \mathcal{F}^{s-3})$*;*
3. $\mathtt{u}_0 \in \mathcal{V}^{s+1}$ *and* $\mathtt{u}_1 \in \mathcal{V}^s$*, and the conditions* (4.26) *hold;*

4. *the quantities* $\mathtt{u}_{m\|}$ *and* $\mathtt{u}_{m+1,\|}$*, defined by the formulas* (4.32) *and* (4.33) *in function of the projections* $\mathtt{u}_{0\|}$, $\mathtt{u}_{1\|}$, $\left(\mathtt{f}_{\|}^{(\ell)}(0)\right)_{\ell=0,\ \dots,\ m-2}$ *onto* $\mathcal{L}$*, belong, respectively, to* $\mathcal{V}^{s+1}$ *and* $\mathcal{V}^{s}$*.*

Then, the solution $(\mathtt{u},\mathtt{p})$ *to Problem* (4.21) *satisfies*

$$(\mathtt{u},\mathtt{u}') \in C^m([0,T];\mathcal{V}^{s+1}\times\mathcal{V}^s)\,, \quad (\mathtt{u}'',\mathtt{p}) \in W^{m,p}(0,T;\mathcal{V}^{s-1}\times\mathcal{Q}^s),$$

and depends continuously on the data $(\mathtt{f},\mathtt{g},\mathtt{u}_0,\mathtt{u}_1,\mathtt{u}_{m\|},\mathtt{u}_{m+1,\|})$ *in their respective spaces.*

Proof. We take the characterisations of $(\mathtt{u}_{\|},\mathtt{u}_{\perp},\mathtt{p})$ from the proof of Theorem 4.3.19. The parallel component $\mathtt{u}_{\|}$ is the solution to the unconstrained evolution problem:

$$\begin{cases} \textit{Find } \mathtt{u}_{\|} \textit{ such that} \\ \dfrac{d^2\mathtt{u}_{\|}}{dt^2} + \mathtt{A}_w\mathtt{u}_{\|} = \mathtt{f}_{\|}, \quad t>0\,; \\ \mathtt{u}_{\|}(0) = \mathtt{u}_{0\|}\ ,\ \dfrac{d\mathtt{u}_{\|}}{dt}(0) = \mathtt{u}_{1\|}\,; \end{cases}$$

and one applies Theorem 4.4.4. The perpendicular component $\mathtt{u}_{\perp}$ is defined, at each time, by the conditions

$$\forall \mathtt{q}\in\mathcal{Q}, \quad b(\mathtt{u}_{\perp}(t),\mathtt{q}) = \langle \mathtt{g}(t),\mathtt{q}\rangle_{\mathcal{Q}} \quad \text{or} \quad \forall \mathtt{q}\in\mathcal{Q}_w, \quad b_w(\mathtt{u}_{\perp}(t),\mathtt{q}) = \langle \mathtt{g}(t),\mathtt{q}\rangle_{\mathcal{Q}_w}\,.$$

Applying Lemma 4.2.18, one finds $\mathtt{u}_{\perp}\in C^m([0,T];\mathcal{V}^{s+1})\cap C^{m+1}([0,T];\mathcal{V}^s)\cap W^{m+2,p}(0,T;\mathcal{V}^{s-1})$, the continuous dependence following from the definition of the spaces $\mathcal{F}^{\sigma}$ and their norms. Finally, the multiplier $\mathtt{p}$ satisfies

$$\mathtt{B}^{\dagger}\mathtt{p} = \mathtt{f} - \mathtt{u}'' - \mathtt{A}_w\mathtt{u} \in W^{m,p}(0,T;\mathcal{V}^{s-1}),$$

the norm of the r.h.s. being bounded by that of the data in their respective spaces. Hence, $\mathtt{p}\in W^{m,p}(0,T;\mathcal{Q}^s)$ by definition of the latter space, with continuous dependence on the data. ■

Remark 4.4.9 *Let us comment on the assumptions of this theorem.*

- *The form* b_w *and its inf-sup condition are not needed if* $s\geq 2$*.*
- *If* $\mathtt{f}\in W^{m,1}(0,T;\mathcal{V}^s)\cap C^m([0,T];\mathcal{V}^{s-1})$ *or* $\mathtt{f}\in W^{m+1,1}(0,T;\mathcal{V}^{s-1})$*, and moreover,* $\mathtt{g}\in C^{m+2}([0,T];\mathcal{F}^{s-3})$*, then* $(\mathtt{u}'',\mathtt{p})\in C^m([0,T];\mathcal{V}^{s-1}\times\mathcal{Q}^s)$*.*
- *The regularity assumption on* $\mathtt{g}$ *has been chosen by an "aesthetic" criterion, viz., that* $\mathtt{u}_{\perp}$ *and* $\mathtt{u}_{\|}$ *should have the same space-time regularity. For the purpose of convergence analysis, this is not always necessary: the regularity of* $\mathtt{u}$ *can be limited by that of* $\mathtt{u}_{\perp}$*. In that case, it suffices to remark that* $\mathtt{u}_{\perp}\in E([0,T];\mathcal{V}^{\sigma})$ *— for any space* E *measuring time regularity on* $[0,T]$ *— iff* $\mathtt{g}\in E([0,T];\mathcal{F}^{\sigma-2})$*.*

4.5 Time-harmonic problems

To conclude this brief overview, we consider classes of problems that stand in-between static and time-dependent formulations. From a practical point of view, it is assumed that the time-dependence is explicitly known – in $\exp(-\imath\omega t)$ – which allows us to remove the time variable from the formulation. We shall consider two cases, depending on whether the pulsation ω of the signal is data, i.e., the *fixed frequency problem*, or it is an unknown, to be determined, i.e., the *unknown frequency problem*. From an abstract point of view, they respectively correspond to Helmholtz-like problems, and to eigenproblems. We again provide elements of proofs in this section.

4.5.1 Helmholtz-like problem

Let H and V be two Hilbert spaces, such that V is a vector subspace of H with continuous imbedding $i_{V\to H}$. In what follows, we choose H as the pivot space. Let $a(\cdot,\cdot)$ be a sesquilinear continuous form on $V\times V$, A the corresponding operator defined at (4.4) with $V=W$, and $\lambda\in\mathbb{C}\setminus\{0\}$. Given $f\in V'$, the Helmholtz-like problem to be solved is

$$\begin{cases} \textit{Find } u\in V \textit{ such that} \\ \forall v\in V,\ a(u,v)+\lambda(u,v)_H=\langle f,v\rangle. \end{cases} \tag{4.36}$$

Such problems are usually solved with the help of the Fredholm alternative.

Theorem 4.5.1 `(Helmholtz-like problem)` *Assume that the sesquilinear form a is such that A is an isomorphism from V to V', and that the canonical imbedding $i_{V\to H}$ is compact. Then:*
– either, for all $f\in V'$, Problem (4.36) has one, and only one, solution u, which depends continuously on f;
– or, Problem (4.36) has solutions if, and only if, f satisfies a finite number n_λ of orthogonality conditions. Then, the space of solutions is affine, and the dimension of the corresponding linear vector space (i.e., the kernel) is equal to n_λ. Moreover, the part of the solution that is orthogonal to the kernel depends continuously on the data.

Proof. Since the operator A^{-1} is well-defined, one can replace the right-hand side with $a(A^{-1}f,v)$ in (4.36). Also, one can replace the second term as follows. We mention the imbedding $i_{V\to H}$ explicitly here, to write

$$\forall v\in V,\ (u,v)_H=(i_{V\to H}u,v)_H=\langle i_{V\to H}u,v\rangle=a(A^{-1}\circ i_{V\to H}u,v).$$

So, Problem (4.36) equivalently rewrites

$$\begin{cases} \textit{Find } u\in V \textit{ such that} \\ (I_V+\lambda\,A^{-1}\circ i_{V\to H})u=A^{-1}f \text{ in } V. \end{cases}$$

To conclude, we note that $i_{V\to H}$ is a compact operator, whereas A^{-1} is a bounded operator. According to Proposition 4.1.2, $A^{-1}\circ i_{V\to H}$ is a compact operator of $\mathcal{L}(V)$, so that Theorem 4.1.18 and Corollary 4.1.19 (Fredholm alternative) yield the desired result as far as the alternative is concerned.
There remains to study the continuous dependence of the solution with respect to the data. Let $T = I_V + \lambda\, A^{-1}\circ i_{V\to H}$, $K_\lambda = \ker(T)$ and $R_\lambda = R(T)$.
First, assume that $K_\lambda = \{0\}$. According to Theorem 4.1.18, T is a bijective mapping of $\mathcal{L}(V)$. Then, the open mapping Theorem 4.1.4 states that T^{-1} belongs to $\mathcal{L}(V)$, so one concludes that

$$\|u\|_V \le |||T^{-1}|||\,|||A^{-1}|||\,\|f\|_{V'}.$$

Or, assume that K_λ is a finite-dimensional space of V that is not reduced to $\{0\}$. Let $n_\lambda = \dim K_\lambda$. According to Theorem 4.1.18, R_λ is a closed subspace of V, and $\operatorname{codim} R_\lambda = n_\lambda$. Moreover, the restriction of T to $K_\lambda^\perp$, denoted by $T_{|K_\lambda^\perp}$, is a bijective mapping from $K_\lambda^\perp$ to R_λ. Thus, Problem (4.36) has a solution if, and only if, f satisfies n_λ orthogonality conditions. In this case, the solution u can be written as $u = u_\perp + u_0$, where $u_\perp$ belongs to $K_\lambda^\perp$ and is unique, and u_0 is any element of the kernel K_λ. When these conditions are met, one has

$$\|u_\perp\|_V \le |||(T_{|K_\lambda^\perp})^{-1}|||\,|||A^{-1}|||\,\|f\|_{V'}.$$

■

Remark 4.5.2 *For practical situations that ensure that A^{-1} is well-defined, we refer to Remark 4.2.15.*

Corollary 4.5.3 `(Helmholtz-like problem)` *Provided there exists $\mu \in \mathbb{C}$ such that the sesquilinear form $a(\cdot,\cdot)+\mu(\cdot,\cdot)_H$ is coercive on $V\times V$, and provided the canonical imbedding $i_{V\to H}$ is compact, the conclusions of Theorem 4.5.1 apply.*

Proof. In Problem (4.36), one simply replaces $a(u,v)+\lambda(u,v)_H$ with $\{a(u,v)+\mu(u,v)_H\}+\{\lambda-\mu\}(u,v)_H$. ■

Remark 4.5.4 *It is possible to use compact operators of $\mathcal{L}(H)$ instead. For illustrative purposes, we adopt this point of view in the next subsection.*

Remark 4.5.5 *Static problems can be seen as Helmholtz-like problems with $\lambda = 0$. Also, in the particular case when $a(\cdot,\cdot)$ is Hermitian and $\lambda \ge 0$, the sesquilinear form $a(u,v)+\lambda(u,v)_H$ is directly coercive on $V\times V$, so the Lax-Milgram Theorem 4.2.8 applies: Problem (4.36) is well-posed in the Hadamard sense. On the other hand, when $\lambda < 0$, the form $v \mapsto a(v,v)+\lambda\|v\|_H^2$ can be indefinite (no specific sign). In this case, Problem (4.36) is well-posed in the Fredholm sense.*

This result can be recast quite simply into the so-called *coercive + compact* framework. Let $c(\cdot,\cdot)$ be a second sesquilinear continuous form on $H\times V$. Given $f\in V'$, the second Helmholtz-like problem to be solved is

$$\begin{cases} \textit{Find } u \in V \textit{ such that} \\ \forall v \in V,\ a(u,v) + c(u,v) = \langle f, v \rangle. \end{cases} \tag{4.37}$$

Remark 4.5.6 *Problems (4.36) and (4.37) belong to the class of* perturbed problems*, here with a compact perturbation.*

The previous Theorem can thus be generalized.

Theorem 4.5.7 `(Helmholtz-like problem)` *Assume that the sesquilinear form a is such that A is an isomorphism from V to V' and that the canonical imbedding $i_{V \to H}$ is compact. Then:*
– either, for all $f \in V'$, Problem (4.37) has one, and only one, solution u, which depends continuously on f;
– or, Problem (4.37) has solutions if, and only if, f satisfies a finite number n_c of orthogonality conditions. Then, the space of solutions is affine, and the dimension of the corresponding linear vector space (the kernel) is equal to n_c. Moreover, the part of the solution that is orthogonal to the kernel depends continuously on the data.

Proof. (**Sketched**). Remark that, for all $u, v \in V$, $c(u,v) = c(i_{V \to H} u, v)$. Given $h \in H$, Problem

$$\begin{cases} \textit{Find } w \in V \textit{ such that} \\ \forall v \in V,\ a(w,v) = c(h,v) \end{cases}$$

admits one, and only one solution, and the mapping $T_c \ : \ h \mapsto w$ belongs to $\mathcal{L}(H, V)$. Thus, the Helmholtz-like problem (4.37) can be rewritten equivalently as

$$\begin{cases} \textit{Find } u \in V \textit{ such that} \\ (I_V + T_c \circ i_{V \to H})u = A^{-1} f \text{ in } V. \end{cases}$$

One concludes as in the proof of Theorem 4.5.1. ■

We now turn to Helmholtz-like problems with constraints. Let us introduce a third Hilbert space, denoted by Q, $g \in Q'$ and $b(\cdot,\cdot)$, a continuous sesquilinear form on $V \times Q$. The Helmholtz-like problem with constraints is formulated as follows:

$$\begin{cases} \textit{Find } (u,p) \in V \times Q \textit{ such that} \\ \forall v \in V,\ a(u,v) + c(u,v) + \overline{b(v,p)} = \langle f, v \rangle \\ \forall q \in Q,\ b(u,q) = \langle g, q \rangle. \end{cases} \tag{4.38}$$

We introduce once more the kernel of $b(\cdot,\cdot)$,

$$K = \{v \in V \ : \ \forall q \in Q,\ b(v,q) = 0\}.$$

Let us assume that the form b satisfies the inf-sup condition (4.10) for some $\beta > 0$. According to Lemma 4.2.18, there exists[14] one, and only one, $u_g \in K^\perp$ such that $Bu_g = g$. Let us introduce $f' \in V'$ defined by

[14] Since g can be any element of Q', one has to assume that B is surjective. If $g = 0$, then this inf-sup condition could be dropped to formulate the Helmholtz-like problem set in K. However, it is useful in Proposition 4.5.8.

$$\forall v \in V,\ \langle f', v\rangle = \langle f, v\rangle - a(u_g, v) - c(u_g, v).$$

It is then possible to consider another Helmholtz-like problem, set in K. It writes

$$\begin{cases} \textit{Find } u_0 \in K \textit{ such that} \\ \forall v_\parallel \in K,\ a(u_0, v_\parallel) + c(u_0, v_\parallel) = \langle f', v_\parallel\rangle. \end{cases} \tag{4.39}$$

One relates those two Helmholtz-like problems with constraints in the following way.

Proposition 4.5.8 *Assume that the form b satisfies the inf-sup condition (4.10) for some $\beta > 0$. Let $u_g \in K^\perp$ be characterized as $Bu_g = g$.*

1. *If there exists (u, p) a solution to (4.38), then $u - u_g$ solves (4.39).*
2. *If there exists u_0 a solution to (4.39), then there exists $p \in Q$ such that $(u_0 + u_g, p)$ solves (4.38).*

Proof.

1. Straightforward.
2. Let $u' = u_0 + u_g$. By definition, one has

$$\forall q \in Q,\ b(u', q) = \langle g, q\rangle.$$

Let $v \in V$ be split as $v = v_\parallel + v_\perp$, with $(v_\parallel, v_\perp) \in K \times K^\perp$.

$$\begin{aligned} a(u', v) + c(u', v) &= \langle f, v_\parallel\rangle + a(u', v_\perp) + c(u', v_\perp) \\ &= \langle f, v\rangle + \{a(u', v_\perp) + c(u', v_\perp) - \langle f, v_\perp\rangle\}. \end{aligned}$$

The antilinear form $v \mapsto a(u', v_\perp) + c(u', v_\perp) - \langle f, v_\perp\rangle$ belongs to the polar set of K. From Lemma 4.2.18, there exists $p \in Q$ such that

$$\forall v \in V,\ a(u', v) + c(u', v) - \langle f, v\rangle = -\overline{b(v, p)}.$$

It follows that the pair (u', p) solves (4.38).

■

From there, one can state the result in regard to Helmholtz-like problems with constraints.

Theorem 4.5.9 `(Helmholtz-like problem with constraints)` *Assume that the sesquilinear form a is coercive* on K*, that the canonical imbedding $i_{K\to H}$ is compact, and finally, that the form b satisfies the inf-sup condition (4.10) for some $\beta > 0$. Then, the Helmholtz-like problems (4.38) and (4.39) fit into the coercive + compact framework.*

Proof. According to the previous proposition, we know that Problem (4.38) admits a solution u if, and only if, Problem (4.39) admits a solution u_0. Moreover, the two are related by $u = u_0 + u_g$, with $u_g \in K^\perp$ being unique and such that $\|u_g\|_V \le \beta^{-1}\|g\|_{Q'}$ (Lemma 4.2.18). This characterizes the part

of the solution (if it exists...) to Problem (4.38) that belongs to $K^\perp$. So, for simplicity, we assume that $g = 0$ so that $u_0 = u$ (and $f' = f$), and we choose to focus on Problem (4.39) from now on.
Since $a(\cdot,\cdot)$ is coercive on K, and since $b(\cdot,\cdot)$ satisfies an inf-sup condition, the Babuska-Brezzi Theorem 4.2.19 states that, given $\underline{f} \in V'$, Problem

$$\begin{cases} \textit{Find } (w,r) \in V \times Q \textit{ such that} \\ \forall v \in V,\ a(w,v) + \overline{b(v,r)} = \langle \underline{f}, v\rangle \\ \forall q \in Q,\ b(w,q) = 0 \end{cases}$$

is well-posed, and the mapping $T\ :\ \underline{f} \mapsto w$ belongs to $\mathcal{L}(V',K)$. In (4.39), one can thus replace the right-hand side with $a(Tf, v_\parallel)$, whereas the second term is likewise replaced with $a(T_c \circ i_{K\to H} u_0, v_\parallel)$. Thanks to the coerciveness of the form a on K, Problem (4.38) rewrites

$$\begin{cases} \textit{Find } u_0 \in K \textit{ such that} \\ (I_K + T_c \circ i_{K\to H})u_0 = Tf \text{ in } K. \end{cases}$$

Noting that $T_c \circ i_{K\to H}$ is a compact operator of $\mathcal{L}(K)$, we conclude by using the Fredholm alternative. ■

4.5.2 Eigenproblem

Let H and V be two Hilbert spaces, such that V is a separable, *dense*, vector subspace of H with continuous imbedding $i_{V\to H}$. We choose H as the pivot space. Let $a(\cdot,\cdot)$ be a sesquilinear continuous form on $V\times V$ with the associated operator $A \in \mathcal{L}(V,V')$. The eigenproblem to be solved is

$$\begin{cases} \textit{Find } (u,\lambda) \in (V \setminus \{0\}) \times \mathbb{C} \textit{ such that} \\ \forall v \in V,\ a(u,v) = \lambda (u,v)_H. \end{cases} \tag{4.40}$$

With a slight abuse of notations, we say that u is an eigenvector, λ is an eigenvalue, and (u,λ) is an eigenpair. As a matter of fact, assume that the operator A is an *isomorphism*, and let $T \in \mathcal{L}(H,V)$ be defined by

$$g \mapsto Tg = w,\ w \text{ solution to } \begin{cases} \textit{Find } w \in V \textit{ such that} \\ \forall v \in V,\ a(w,v) = (g, i_{V\to H} v)_H. \end{cases}$$

Above, w is well-defined, because A is an isomorphism. Indeed, one can replace the right-hand side $(g, i_{V\to H} v)_H$ with $\langle i_{H\to V'} g, v\rangle_V$, so that $w = A^{-1} \circ i_{H\to V'} g$. In terms of operators, one has $T = A^{-1} \circ i_{H\to V'}$. Next, let

$$T_H = i_{V\to H} \circ T \in \mathcal{L}(H).$$

Given a solution (u,λ) of (4.40), one finds that $T_H u = \lambda^{-1} u$, i.e., u belongs to the eigenspace $E_{\lambda^{-1}}(T_H)$([15]). Thus, in H, the eigenproblem (4.40) boils down to:

[15] Because the operator A is an isomorphism, one has $\lambda \neq 0$, as it holds that $Au = \lambda u$ in V', with $u \neq 0$.

$$\begin{cases} \textit{Find } (u,\nu) \in (H \setminus \{0\}) \times \mathbb{C} \textit{ such that} \\ \nu u = T_H u \end{cases},$$

where $\nu = \lambda^{-1} \neq 0$: (u,ν) is an eigenpair of T_H, which justifies *a posteriori* the definition of (u,λ) as an eigenpair of (4.40). One has $R(T_H) \subset V$, so all eigenvectors belong to V.

Finally, if the canonical imbedding $i_{V\to H}$ is *compact*, then, by construction, T_H is a compact operator (see Proposition 4.1.2) and one may apply Theorem 4.1.7.

Theorem 4.5.10 `(Eigenvalues)` *Assume that the operator A is an isomorphism and that the canonical imbedding $i_{V\to H}$ is compact. Then, 0 is not an eigenvalue of Problem (4.40). Moreover, the eigenvalues are all of finite multiplicities and the set of their moduli can be reordered as a nondecreasing sequence whose limit is $+\infty$.*

One can be more precise, with the help of Theorem 4.1.20. This requires a compact and self-adjoint operator[16] T_H, for which it is sufficient to have a *Hermitian* form a (apply Proposition 4.1.13). In this case, the geometric and algebraic multiplicities of all eigenvalues coincide.

Theorem 4.5.11 `(Eigenproblem)` *Assume that the sesquilinear form a is Hermitian, that the operator A is an isomorphism and that the canonical imbedding $i_{V\to H}$ is compact. Thus, 0 is not an eigenvalue. Moreover, there exists a Hilbert basis $(e_k)_k$ of H made of eigenvectors of Problem (4.40) with corresponding real eigenvalues $(\lambda_k)_k$. Finally, the eigenvalues are all of finite multiplicities and $(|\lambda_k|)_k$ can be reordered as an increasing sequence whose limit is $+\infty$.*

Corollary 4.5.12 `(Eigenproblem)` *In addition to the hypotheses of Theorem 4.5.11, assume that the sesquilinear form a is coercive. In this case, all eigenvalues $(\lambda_k)_k$ are strictly positive, and $(\lambda_k^{-1/2} e_k)_k$ is a Hilbert basis for V.*

We turn to an eigenproblem with constraints. Let us introduce the third Hilbert space, Q, $b(\cdot,\cdot)$, a continuous sesquilinear form on $V \times Q$, and the kernel of $b(\cdot,\cdot)$,

$$K = \{v \in V \ : \ \forall q \in Q, \ b(v,q) = 0\}.$$

The eigenproblem set in K writes

$$\begin{cases} \textit{Find } (u,\lambda) \in (K \setminus \{0\}) \times \mathbb{C} \textit{ such that} \\ \forall v \in K, \ a(u,v) = \lambda (u,v)_H. \end{cases} \tag{4.41}$$

Define L as the closure of K in H. The notion of double orthogonality refers to Definition 4.3.17.

[16] One can check that $T_H^* = i_{V\to H} \circ (A^{-1})^\dagger \circ i_{H\to V'}$.

Theorem 4.5.13 `(Eigenproblem with constraints)` *Assume that the sesquilinear form a is coercive and Hermitian* on K*, that the canonical imbedding $i_{K\to H}$ is compact, and a double orthogonality property of K and $K^\perp$ with respect to $a(\cdot,\cdot)$ and $(\cdot,\cdot)_H$. Thus,* 0 *is not an eigenvalue. Moreover, there exists a Hilbert basis $(f_k)_k$ of L made of eigenvectors of Problem (4.41) with corresponding eigenvalues $(\nu_k)_k$, such that $(\nu_k^{-1/2} f_k)_k$ is a Hilbert basis for K. Furthermore, the eigenvalues can be reordered as an increasing sequence of real, strictly positive, numbers whose limit is $+\infty$. Finally, solving (4.41) is equivalent to solving*

$$\begin{cases} \text{Find } (u,\lambda) \in (K\setminus\{0\})\times\mathbb{C} \text{ such that} \\ \forall v\in V,\ a(u,v)=\lambda(u,v)_H. \end{cases} \tag{4.42}$$

Proof. Endow L with the norm of H, respectively K with the norm of V. L and K are two Hilbert spaces, and K is, by definition, a dense vector subspace of L with continuous imbedding. Thus, all the assumptions of Theorem 4.5.11 and its Corollary 4.5.12 are fulfilled, so the results on the eigenvalues and Hilbert bases of L, respectively K follow.
Finally, if (u,λ) solves (4.42), it obviously solves (4.41). Reciprocally, if (u,λ) solves (4.41), then given a test function $v\in V$ split as $v=v_\parallel+v_\perp$ with $v_\parallel\in K$, $v_\perp\in K^\perp$, it holds that

$$a(u,v)=a(u,v_\parallel)\overset{(4.41)}{=}\lambda(u,v_\parallel)_H=\lambda(u,v)_H,$$

thanks to the double orthogonality property. Hence, (u,λ) solves (4.42). ■

On the other hand, an eigenproblem with constraints can be formulated in mixed form

$$\begin{cases} \textit{Find } (u,p,\lambda)\in(V\setminus\{0\})\times Q\times\mathbb{C} \textit{ such that} \\ \forall v\in V,\ a(u,v)+\overline{b(v,p)}=\lambda(u,v)_H \\ \forall q\in Q,\ b(u,q)=0. \end{cases} \tag{4.43}$$

Note that we do not impose that $p\neq 0$, since the eigenvector of interest is u (cf. [51] for an illuminating discussion on this topic). It is interesting to compare the two eigenproblems (4.41) and (4.43).

Proposition 4.5.14 *One has the following results:*

1. *Let (u,p,λ) be an eigentriple of (4.43): (u,λ) is an eigenpair of (4.41).*
2. *Assume that the form b satisfies the inf-sup condition (4.10) for some $\beta>0$. Let (u,λ) be an eigenpair of (4.41): there exists $p\in Q$ such that (u,p,λ) is an eigentriple of (4.43).*
3. *Assume further a double orthogonality property of K and $K^\perp$ with respect to the form a and $(\cdot,\cdot)_H$. Any eigentriple (u,p,λ) of (4.43) is such that $p=0$.*

Proof. Let us proceed sequentially.

1. Let (u, p, λ) be an eigentriple of (4.43). According to the second equation u belongs to K. Then, taking $v \in K$ in the first equation, one recovers the statement of (4.41). So, (u, λ) is an eigenpair of (4.41).
2. Conversely, let (u, λ) be an eigenpair of (4.41). From the definition of K, we conclude that, for all $q \in Q$, $b(u, q) = 0$. Next, splitting $v \in V$ as $v = v_\parallel + v_\perp$ with $(v_\parallel, v_\perp) \in K \times K^\perp$, one obtains
$$a(u, v) - \lambda(u, v)_H = a(u, v_\perp) - \lambda(u, v_\perp)_H,$$
since (u, λ) solves (4.41). It follows (as usual) that the antilinear form $v \mapsto (u, v_\perp) - \lambda(u, v_\perp)_H$ belongs to the polar set of K. According to Lemma 4.2.18 ($b(\cdot, \cdot)$ satisfies an inf-sup condition), there exists $p \in Q$ such that
$$\forall v \in V,\ a(u, v) - \lambda(u, v)_H = -\overline{b(v, p)}.$$
In other words, (u, p, λ) is an eigentriple of (4.43).
3. Finally, let us assume a double orthogonality property, and consider an eigentriple (u, p, λ) of (4.43). Recall that (u, λ) is an eigenpair of (4.41) (see step 1.). According to Lemma 4.2.18, it is enough to prove that $B^\dagger p = 0$. To that aim, consider any $v = v_\parallel + v_\perp$ with $(v_\parallel, v_\perp) \in K \times K^\perp$, and compute
$$\begin{aligned}\langle B^\dagger p, v\rangle = \overline{b(v, p)} &= \lambda(u, v)_H - a(u, v)\\ &= \{\lambda(u, v_\parallel)_H - a(u, v_\parallel)\} + \{\lambda(u, v_\perp)_H - a(u, v_\perp)\} = 0.\end{aligned}$$
Above, the first part vanishes because (u, λ) solves (4.41), whereas the second part vanishes thanks to the double orthogonality property. The conclusion follows.

■

4.6 Summing up

We note that, according to the mathematical framework we have developed, the problems we solve are usually composed of two parts:

- A function space in which we look for the solution, endowed with a given norm to *measure* it;
- A *set of equations* or, in the Variational Formulations, the result of the action of the solution on test functions.

When the first statement is not explicitly stated, one has to be careful! As an example, we refer the interested reader to Grisvard's works, for instance, [126], in which *singular* solutions of the Poisson problem are exhibited: these solutions are governed by the homogeneous Poisson problem, so, at first glance, one would expect the solution to be zero, but this is not the case!

As far as Maxwell's equations and related models are concerned, Chapter 1 deals mainly with (sets of) equations, that is, the second statement. On the other hand, no information is provided as to the relevant spaces of solutions, the first statement. Therefore, in order to solve those problems, one has to build those spaces, using, for instance, the expression of the electromagnetic energy, or the expression of Coulomb's law. These topics will be addressed at length in Chapters 5, 6, 7 and 8. To that aim, we introduced (quite) well-known classes of function spaces in the previous chapter, Lebesgue or Sobolev spaces, for the most part. We also provided some results about the norms that can be used to measure elements of those spaces.

5

Analyses of exact problems: first-order models

In this chapter, we devote our attention to establishing mathematical properties concerning the electromagnetic fields that are governed by the time-dependent Maxwell equations. For that, we investigate a number of physical properties of the electromagnetic fields exhibited in Chapter 1, using the mathematical tools introduced in Chapters 2, 3 and 4. We focus mainly on four items:

- uniqueness;
- existence;
- continuous dependence with respect to the data;
- regularity in terms of Sobolev spaces.

The first three items amount to well-posedness. For all items, the crucial question to be addressed is how to measure the electromagnetic fields. Unless otherwise specified, we consider complex-valued function spaces. On the other hand, if a problem is well-posed with real-valued data and coefficients, we remark that its solution is always real-valued by uniqueness.

5.1 Energy matters: uniqueness of the fields

To begin with, we build some electromagnetic energy conservation relations, which allow one to prove the uniqueness of the electromagnetic fields. We consider Maxwell's equations on some time interval I, and some volume of $\mathbb{R}^3$ (to be specified).

5.1.1 Preliminaries

First, we go back to §1.7 (with real-valued fields), adopting a mathematical point of view...

In vacuum

Let us consider that $\mathbb{R}^3$ is made of a homogeneous medium (vacuum). In this case, the conservation relation is Eq. (1.149). Given any volume V, the first term is

$$\frac{d}{dt}\left(\int_V \{\frac{\varepsilon_0}{2}|\boldsymbol{E}(t)|^2 + \frac{\mu_0}{2}|\boldsymbol{H}(t)|^2\}\, d\boldsymbol{x}\right).$$

For $t \mapsto \int_V \{\frac{\varepsilon_0}{2}|\boldsymbol{E}(t)|^2 + \frac{\mu_0}{2}|\boldsymbol{H}(t)|^2\}\, d\boldsymbol{x}$ to have a meaning, one has to assume that $\frac{\varepsilon_0}{2}|\boldsymbol{E}(t)|^2 + \frac{\mu_0}{2}|\boldsymbol{H}(t)|^2$ belongs to $L^1(V)$ for (almost) all $t \in I$: or, equivalently, that $\boldsymbol{E}(t)$ and $\boldsymbol{H}(t)$ belong to $\boldsymbol{L}^2(V)$ for (almost) all $t \in I$. Then, we can write the integrals as the squares of $\boldsymbol{L}^2(V)$ norms: $\frac{\varepsilon_0}{2}\|\boldsymbol{E}(t)\|^2_{\boldsymbol{L}^2(V)} + \frac{\mu_0}{2}\|\boldsymbol{H}(t)\|^2_{\boldsymbol{L}^2(V)}$. Then, differentiating in time, one finds

$$\frac{d}{dt}\left(\int_V \{\frac{\varepsilon_0}{2}|\boldsymbol{E}(t)|^2 + \frac{\mu_0}{2}|\boldsymbol{H}(t)|^2\}\, d\boldsymbol{x}\right) = \int_V \{\varepsilon_0 \boldsymbol{E}(t)\cdot\boldsymbol{E}'(t) + \mu_0 \boldsymbol{H}(t)\cdot\boldsymbol{H}'(t)\}\, d\boldsymbol{x}.$$

As a consequence, one assumes that $\boldsymbol{E}'(t)$, $\boldsymbol{H}'(t)$ belong to $\boldsymbol{L}^2(V)$: we can write the integrals as $\boldsymbol{L}^2(V)$ scalar products. In order to validate integration/differentiation in time, one uses Proposition 2.3.4: namely, one needs $\varepsilon_0 \boldsymbol{E}\cdot\boldsymbol{E}' + \mu_0 \boldsymbol{H}\cdot\boldsymbol{H}'$ to belong to $L^1(I; L^1(V))$, so it is enough that $\boldsymbol{E}$, $\boldsymbol{E}'$, $\boldsymbol{H}$, $\boldsymbol{H}'$ all belong to $L^2(I; \boldsymbol{L}^2(V))$. Next, for the third term of Eq. (1.149)

$$\int_V \boldsymbol{E}(t)\cdot\boldsymbol{J}(t)\, d\boldsymbol{x}\,,$$

it is enough that $\boldsymbol{J}(t)$ belongs to $\boldsymbol{L}^2(V)$ for (almost) all $t \in I$, and again, one can replace the integral as an $\boldsymbol{L}^2(V)$ scalar product. Now, going back to Ampère's and Faraday's laws, one has

$$\mathbf{curl}\,\boldsymbol{H}(t) = \varepsilon_0 \boldsymbol{E}'(t) + \boldsymbol{J}(t), \quad \mathbf{curl}\,\boldsymbol{E}(t) = -\mu_0 \boldsymbol{H}'(t),$$

and therefore $\mathbf{curl}\,\boldsymbol{E}(t)$, $\mathbf{curl}\,\boldsymbol{H}(t)$ also belong to $\boldsymbol{L}^2(V)$. We conclude that, to build the energy relation in the volume V and the time interval I, it is enough to require *a priori*

$$\begin{aligned}
&\boldsymbol{E} \in L^2(I; \boldsymbol{H}(\mathbf{curl}, V)),\ \boldsymbol{E}' \in L^2(I; \boldsymbol{L}^2(V))\,;\\
&\boldsymbol{H} \in L^2(I; \boldsymbol{H}(\mathbf{curl}, V)),\ \boldsymbol{H}' \in L^2(I; \boldsymbol{L}^2(V))\,;\\
&\boldsymbol{J} \in L^2(I; \boldsymbol{L}^2(V)).
\end{aligned} \tag{5.1}$$

Remark 5.1.1 *As noted above, the regularity on the curl of the electromagnetic fields is equivalent to the regularity on their first-order time derivative, because they fulfill Ampère's and Faraday's laws.*

Notice that (5.1) holds for any volume V of $\mathbb{R}^3$, and in particular, it holds in all space $\mathbb{R}^3$. Let us focus finally on the second term of Eq. (1.149) (a boundary term), written here as

$$\int_{\partial V} \boldsymbol{S}_0(t) \cdot \boldsymbol{n}\, dS, \text{ with } \boldsymbol{S}_0(t) := \boldsymbol{E}(t) \times \boldsymbol{H}(t).$$

Due to Proposition 2.1.3, we remark that $\boldsymbol{S}_0(t)$ belongs to $\boldsymbol{L}^1(V)$. Likewise, $\operatorname{div} \boldsymbol{S}_0(t) = \mathbf{curl}\, \boldsymbol{E}(t) \cdot \boldsymbol{H}(t) - \boldsymbol{E}(t) \cdot \mathbf{curl}\, \boldsymbol{H}(t)$ also belongs to $L^1(V)$. We conclude that $\boldsymbol{S}_0 \in L^1(I; W^1(\operatorname{div}, V))$, where

$$W^1(\operatorname{div}, V) := \{\boldsymbol{w} \in \boldsymbol{L}^1(V) \ : \ \operatorname{div} \boldsymbol{w} \in L^1(V)\}.$$

According to Proposition 2.1.4, we know that $L^\infty(V) = (L^1(V))'$. If we assume that ∂V is Lipschitz, then one can define the normal trace $\boldsymbol{S}_0(t) \cdot \boldsymbol{n}$ on ∂V by duality, with the help of the space $W^{1,\infty}(V)$. For that, one uses the integration-by-parts formula (2.18). If one recalls that $W^{1,\infty}(V) = C^{0,1}(\overline{V})$ (see Remark 2.1.40), then the space of traces of elements of $W^{1,\infty}(V)$ is exactly $C^{0,1}(\partial V)$. In the same spirit as Definition 2.2.17 and Theorem 2.2.18, we conclude that $\boldsymbol{S}_0(t) \cdot \boldsymbol{n}_{|\partial V}$ belongs to $(C^{0,1}(\partial V))'$. Hence, the second term has a meaning: we write $\langle \boldsymbol{S}_0(t) \cdot \boldsymbol{n}_{|\partial V}, 1\rangle_{C^{0,1}(\partial V)}$.

In a perfect medium

Let us consider now that $\mathbb{R}^3$ is made of a perfect medium. Provided that $\mathbb{e}$ and $\mathbb{p}$ are fields of *symmetric* tensors (independent of t), one again obtains a conservation equation, namely Eq. (1.152). Let us highlight below the similarities and differences with respect to the case of vacuum.
Given a volume V, we can write the first term of Eq. (1.152) as

$$\frac{1}{2}(\mathbb{e}\boldsymbol{E}(t), \boldsymbol{E}(t))_{\boldsymbol{L}^2(V)} + \frac{1}{2}(\mathbb{p}\boldsymbol{H}(t), \boldsymbol{H}(t))_{\boldsymbol{L}^2(V)},$$

provided that $\boldsymbol{E}(t)$ and $\boldsymbol{H}(t)$ belong to $\boldsymbol{L}^2(V)$ (as above) and that $\mathbb{e}, \mathbb{p} \in \mathbb{L}^\infty(V)$ (cf. Proposition 2.1.2). To allow differentiation in time, it is enough, as above, that $\boldsymbol{E}$, $\boldsymbol{E}'$, $\boldsymbol{H}$, $\boldsymbol{H}'$ all belong to $L^2(I; \boldsymbol{L}^2(V))$. Concerning the third term of Eq. (1.152), we can write it as an $\boldsymbol{L}^2(V)$ scalar product, provided that $\boldsymbol{J}(t)$ belongs to $\boldsymbol{L}^2(V)$. We conclude that (5.1) remains a sufficient requirement, assuming that $\mathbb{e}, \mathbb{p}$ are symmetric tensor fields of $\mathbb{L}^\infty(V)$. Dealing finally with the second term of Eq. (1.152), we can write it again as $\langle \boldsymbol{S}(t) \cdot \boldsymbol{n}_{|\partial V}, 1\rangle_{C^{0,1}(\partial V)}$ with $\boldsymbol{S}(t) := \boldsymbol{E}(t) \times \boldsymbol{H}(t)$, if the boundary ∂V is Lipschitz.

In a volume encased in a perfect conductor, or around a perfectly conducting body

Denoting by V the volume encased in a perfect conductor, or around a perfectly conducting body, one obtains the same *a priori* regularity requirements as above, cf. (5.1), with the addition of the boundary conditions (1.134) and (1.135): $\boldsymbol{E} \times \boldsymbol{n}_{|\partial V} = 0$, $\mathbb{p}\boldsymbol{H} \cdot \boldsymbol{n}_{|\partial V} = 0$. Eq. (1.135) leads to $\boldsymbol{E} \in L^2(I; \boldsymbol{H}_0(\mathbf{curl}, V))$, according to Theorem 2.2.24.

Remark 5.1.2 *On the other hand, how does Eq. (1.134) fit? Recall that, since the normal trace is involved, one should have some result on the divergence of* $\mu\boldsymbol{H}$*. To address this issue, one can actually use the boundary condition on the electric field. Due to Propositions 2.2.10 and 2.3.5, we know that* $\mathbf{curl}\,\boldsymbol{E}$ *actually belongs to* $L^2(I;\boldsymbol{H}_0(\mathrm{div},V))$*. Using Faraday's law, one has* $\mu\boldsymbol{H}' \in L^2(I;\boldsymbol{H}_0(\mathrm{div},V))$*. Due to Theorem 2.2.18, we infer that* $\mu\boldsymbol{H}'(t)\cdot\boldsymbol{n}_{|\partial V} = 0$ *(and* $\mathrm{div}\,\mu\boldsymbol{H}'(t) = 0$*) for (almost) all times* t*. Next, one uses Propositions 2.3.4 and 2.3.6 to recover information on* $\mu\boldsymbol{H}$*. Assuming that, at a given time* t_0*, one has* $\mu\boldsymbol{H}(t_0) \in \boldsymbol{H}(\mathrm{div},V)$*, we conclude that* $\mu\boldsymbol{H}$ *belongs to* $C^0(I;\boldsymbol{H}(\mathrm{div},V))$*. If, in addition, one has* $\mu\boldsymbol{H}(t_1)\cdot\boldsymbol{n}_{|\partial V} = 0$ *at a given time* t_1*, one finally recovers the boundary condition (1.134).*

Conclusion

Recall that it holds that $\boldsymbol{H}_0(\mathbf{curl},\mathbb{R}^3) = \boldsymbol{H}(\mathbf{curl},\mathbb{R}^3)$. According to the above, if we study a perfect medium in $V = \mathbb{R}^3$ itself, or in a volume V encased in a perfect conductor, or around a perfectly conducting body, we conclude that it is enough to require the *a priori* regularity results (see also Remark 5.1.1)

$$\begin{aligned}
&\boldsymbol{E} \in L^2(I;\boldsymbol{H}_0(\mathbf{curl},V)),\ \boldsymbol{E}' \in L^2(I;\boldsymbol{L}^2(V))\,;\\
&\boldsymbol{H} \in L^2(I;\boldsymbol{H}(\mathbf{curl},V)),\ \ \boldsymbol{H}' \in L^2(I;\boldsymbol{L}^2(V))\,;\\
&\boldsymbol{J} \in L^2(I;\boldsymbol{L}^2(V)).
\end{aligned} \tag{5.2}$$

In the rest of this chapter, we shall generally denote $(\cdot\mid\cdot)$ (respectively $\|\cdot\|$), without any subscript, the scalar product (respectively the norm) in $L^2(\Omega)$ or $\boldsymbol{L}^2(\Omega)$, where Ω is an open subset of $\mathbb{R}^3$.

5.1.2 Energy conservation and uniqueness

Let us consider that $\Omega = \mathbb{R}^3$ is made of a perfect medium (cf. Eqs. (1.18-1.21)), plus initial conditions at time $t = 0$ (cf. (1.31)), i.e., $I =]0,+\infty[$:

$$\varepsilon\frac{\partial\boldsymbol{E}}{\partial t} - \mathbf{curl}\,\boldsymbol{H} = -\boldsymbol{J}, \quad t > 0 \tag{5.3}$$

$$\mu\frac{\partial\boldsymbol{H}}{\partial t} + \mathbf{curl}\,\boldsymbol{E} = 0, \quad t > 0 \tag{5.4}$$

$$\mathrm{div}(\varepsilon\boldsymbol{E}) = \varrho, \quad t > 0 \tag{5.5}$$

$$\mathrm{div}(\mu\boldsymbol{H}) = 0, \quad t > 0 \tag{5.6}$$

$$\boldsymbol{E}(0) = \boldsymbol{E}_0,\ \boldsymbol{H}(0) = \boldsymbol{H}_0. \tag{5.7}$$

We also consider that Ω is an unbounded open subset of $\mathbb{R}^3$ of category (C2) equal to $\Omega = \mathbb{R}^3 \setminus \overline{O}$, where O can be a perfectly conducting obstacle, as for the exterior problem, or the perfectly conducting device of interest, as for the interior problem (cf. §1.6.1). Or, we let $\Omega \subset \mathbb{R}^3$ be a domain made of a

perfect medium, encased in a perfect conductor. We call this setting the cavity problem. In this case, we add boundary conditions on $\Gamma = \partial\Omega$ to (5.3)–(5.7):

$$\mathbb{\mu}\boldsymbol{H}\cdot\boldsymbol{n} = 0, \quad t > 0 \tag{5.8}$$

$$\boldsymbol{E}\times\boldsymbol{n} = 0. \quad t > 0 \tag{5.9}$$

Using the regularity results (5.2) in space and time of the electromagnetic fields[1] (and of the data $\boldsymbol{J}$), let us recover the energy conservation relation, starting from Ampère's and Faraday's laws. Above, $\mathbb{\xi} \in \{\mathbb{\varepsilon}, \mathbb{\mu}\}$ satisfies the following assumption:

$$\begin{cases} \mathbb{\xi} \text{ is a real-valued, symmetric, measurable tensor field on } \Omega, \\ \exists \xi_-, \xi_+ > 0,\ \forall \boldsymbol{X} \in \mathbb{C}^3,\ \xi_- \left|\boldsymbol{X}\right|^2 \leq \mathbb{\xi}\boldsymbol{X}\cdot\overline{\boldsymbol{X}} \leq \xi_+ \left|\boldsymbol{X}\right|^2 \text{ a.e. in } \Omega. \end{cases} \tag{5.10}$$

Remark 5.1.3 *Obviously, one infers similar estimates involving the inverses of $\varepsilon_-, \varepsilon_+$ (respectively of μ_-, μ_+) for the tensor $\mathbb{\varepsilon}^{-1}$ (respectively $\mathbb{\mu}^{-1}$). These assumptions will be frequently used throughout Chapters 5, 6, 7 and 8. They include the case of an inhomogeneous medium ($\mathbb{\varepsilon} = \varepsilon\mathbb{I}_3$, $\mathbb{\mu} = \mu\mathbb{I}_3$).*

Due to the regularity of the fields (5.2), we can respectively take the $\boldsymbol{L}^2(\Omega)$ scalar product of Ampère's law at time t by $\boldsymbol{E}(t)$, and of Faraday's law at time t by $\boldsymbol{H}(t)$, and add them together to obtain, for $t > 0$,

$$\begin{aligned} &(\mathbb{\varepsilon}\boldsymbol{E}'(t)|\boldsymbol{E}(t)) + (\mathbb{\mu}\boldsymbol{H}'(t)|\boldsymbol{H}(t)) \\ &\qquad + (\mathbf{curl}\,\boldsymbol{E}(t)|\boldsymbol{H}(t)) - (\boldsymbol{E}(t)|\,\mathbf{curl}\,\boldsymbol{H}(t)) = -(\boldsymbol{J}(t)|\boldsymbol{E}(t)). \end{aligned}$$

Then, using the integration-by-parts formula (2.20), we have that the third and fourth terms cancel each other out. Thus, we obtain the energy conservation relation below.

$$\begin{aligned} &\frac{dW}{dt}(t) = -(\boldsymbol{J}(t)|\boldsymbol{E}(t)), \quad t > 0\,, \\ &\text{where } W(t) := \frac{1}{2}\{(\mathbb{\varepsilon}\boldsymbol{E}(t)|\boldsymbol{E}(t)) + (\mathbb{\mu}\boldsymbol{H}(t)|\boldsymbol{H}(t))\}. \end{aligned} \tag{5.11}$$

(Above, we used the fact that $\mathbb{\varepsilon}$ and $\mathbb{\mu}$ are both fields of *symmetric* tensors.)

Remark 5.1.4 *Due to assumption (5.10), one has*

$$\frac{1}{2}\{\varepsilon_-\|\boldsymbol{E}(t)\|^2 + \mu_-\|\boldsymbol{H}(t)\|^2\} \leq W(t) \leq \frac{1}{2}\{\varepsilon_+\|\boldsymbol{E}(t)\|^2 + \mu_+\|\boldsymbol{H}(t)\|^2\}.$$

Thus, $W\ :\ t \mapsto W(t)$ defines an electromagnetic energy functional whose square root is equivalent to the $\boldsymbol{L}^2(\Omega)\times\boldsymbol{L}^2(\Omega)$ norm of electromagnetic fields.

[1] See Remark 5.1.2 on how to take into account the boundary condition on the magnetic field.

With the help of (5.11), we can directly prove the uniqueness of the solution to Maxwell's equations. For that, consider that we have two solutions $(\boldsymbol{E}^{(1)}, \boldsymbol{H}^{(1)})$ and $(\boldsymbol{E}^{(2)}, \boldsymbol{H}^{(2)})$. Then, their difference $(\delta\boldsymbol{E}, \delta\boldsymbol{H}) = (\boldsymbol{E}^{(1)} - \boldsymbol{E}^{(2)}, \boldsymbol{H}^{(1)} - \boldsymbol{H}^{(2)})$ is governed by (5.3-5.7) with zero data. Proceeding as before, one finds

$$\frac{d}{dt}\left[\frac{1}{2}\{(\mathbb{e}\delta\boldsymbol{E}(t)|\delta\boldsymbol{E}(t)) + (\mathbb{p}\delta\boldsymbol{H}(t)|\delta\boldsymbol{H}(t))\right] = 0, \quad t > 0.$$

Using the initial condition, one finds

$$\frac{1}{2}\{(\mathbb{e}\delta\boldsymbol{E}(t)|\delta\boldsymbol{E}(t)) + (\mathbb{p}\delta\boldsymbol{H}(t)|\delta\boldsymbol{H}(t))\} = 0, \quad t \geq 0.$$

According to assumption (5.10), one concludes (cf. the previous Remark) that

$$\delta\boldsymbol{E}(t) = \delta\boldsymbol{H}(t) = 0 \text{ in } \boldsymbol{L}^2(\Omega), \quad t \geq 0. \tag{5.12}$$

Hence, uniqueness follows.

It is also possible to derive similar results in the case when Ω – mathematically defined as previously – is made of a dispersive medium, governed by the Lorentz model (without damping) for both the electric permittivity and the magnetic permeability. We sometimes use the vocable "Lorentz material" (without damping) for short. For that, one introduces the additional fields $\boldsymbol{P}$ and $\boldsymbol{M}$, respectively known as the electric and magnetic polarizations (cf. §1.2.4). Recall first that the electric permittivity reads as

$$\hat{\mathbb{e}}_L(\omega) = (\varepsilon_0 + \hat{\varepsilon}_{d,L}(\omega))\mathbb{I}_3, \text{ with } \hat{\varepsilon}_{d,L}(\omega) = -\frac{\varepsilon_0\omega_{p,e}^2}{\omega^2 - \omega_{L,e}^2}, \ \omega_{p,e}^2, \omega_{L,e}^2 > 0.$$

By analogy, we write the magnetic permeability as:

$$\hat{\mathbb{p}}_L(\omega) = (\mu_0 + \hat{\mu}_{d,L}(\omega))\mathbb{I}_3, \text{ with } \hat{\mu}_{d,L}(\omega) = -\frac{\mu_0\omega_{p,m}^2}{\omega^2 - \omega_{L,m}^2}, \ \omega_{p,m}^2, \omega_{L,m}^2 > 0.$$

Then, according to the constitutive relations (1.74), one has

$$\hat{\boldsymbol{D}}(\omega) = \varepsilon_0\hat{\boldsymbol{E}}(\omega) + \hat{\boldsymbol{P}}(\omega), \ \hat{\boldsymbol{B}}(\omega) = \mu_0\hat{\boldsymbol{H}}(\omega) + \hat{\boldsymbol{M}}(\omega),$$

where the polarizations are respectively defined by $\hat{\boldsymbol{P}}(\omega) = 2\pi\hat{\mathbb{e}}_{d,L}(\omega)\hat{\boldsymbol{E}}(\omega)$ and $\hat{\boldsymbol{M}}(\omega) = 2\pi\hat{\mathbb{p}}_{d,L}(\omega)\hat{\boldsymbol{H}}(\omega)$. With the definition of the permittivity and permeability, we deduce that the last relations may be written as

$$\begin{cases} (\omega_{L,e}^2 - \omega^2)\hat{\boldsymbol{P}}(\omega) = 2\pi\varepsilon_0\omega_{p,e}^2\hat{\boldsymbol{E}}(\omega), \\ (\omega_{L,m}^2 - \omega^2)\hat{\boldsymbol{M}}(\omega) = 2\pi\mu_0\omega_{p,m}^2\hat{\boldsymbol{H}}(\omega). \end{cases} \tag{5.13}$$

Applying the reverse time Fourier transform yields

$$\alpha_e \boldsymbol{P} + \beta_e \frac{\partial^2 \boldsymbol{P}}{\partial t^2} = \boldsymbol{E}, \qquad \alpha_m \boldsymbol{M} + \beta_m \frac{\partial^2 \boldsymbol{M}}{\partial t^2} = \boldsymbol{H}, \tag{5.14}$$

with $\alpha_e = \omega_{L,e}^2/(2\pi\varepsilon_0\omega_{p,e}^2)$, $\beta_e = 1/(2\pi\varepsilon_0\omega_{p,e}^2)$, $\alpha_m = \omega_{L,m}^2/(2\pi\mu_0\omega_{p,m}^2)$, $\beta_m = 1/(2\pi\mu_0\omega_{p,m}^2)$. On the other hand, starting from Eqs. (1.6-1.9), one finds

$$\varepsilon_0 \frac{\partial \boldsymbol{E}}{\partial t} + \frac{\partial \boldsymbol{P}}{\partial t} - \mathbf{curl}\, \boldsymbol{H} = -\boldsymbol{J},\ t > 0 \tag{5.15}$$

$$\mu_0 \frac{\partial \boldsymbol{H}}{\partial t} + \frac{\partial \boldsymbol{M}}{\partial t} + \mathbf{curl}\, \boldsymbol{E} = 0,\ \ t > 0 \tag{5.16}$$

$$\mathrm{div}(\varepsilon_0 \boldsymbol{E} + \boldsymbol{P}) = \varrho, \qquad t > 0 \tag{5.17}$$

$$\mathrm{div}(\mu_0 \boldsymbol{H} + \boldsymbol{M}) = 0, \qquad t > 0. \tag{5.18}$$

Keeping the *a priori* regularity results (5.2), one adds

$$\boldsymbol{P}, \boldsymbol{P}', \boldsymbol{M}, \boldsymbol{M}' \in L^2(I; \boldsymbol{L}^2(\Omega)).$$

We can respectively take the $\boldsymbol{L}^2(\Omega)$ scalar product of Ampère's law (5.15) at time t by $\boldsymbol{E}(t)$, and of Faraday's law (5.16) at time t by $\boldsymbol{H}(t)$, and add them together to obtain, for $t > 0$,

$$(\varepsilon_0 \boldsymbol{E}'(t)|\boldsymbol{E}(t)) + (\mu_0 \boldsymbol{H}'(t)|\boldsymbol{H}(t)) + (\boldsymbol{P}'(t)|\boldsymbol{E}(t)) + (\boldsymbol{M}'(t)|\boldsymbol{H}(t)) = -(\boldsymbol{J}(t)|\boldsymbol{E}(t)).$$

As before, we used the integration-by-parts formula (2.20) to cancel out the curl terms. On the other hand, it follows, in particular from (5.14), that $\boldsymbol{P}'', \boldsymbol{M}'' \in L^2(I; \boldsymbol{L}^2(\Omega))$, so one can proceed similarly with the relations (5.14) at time t to find

$$\begin{cases} (\alpha_e \boldsymbol{P}(t)|\boldsymbol{P}'(t)) + (\beta_e \boldsymbol{P}''(t)|\boldsymbol{P}'(t)) = (\boldsymbol{E}(t)|\boldsymbol{P}'(t)), \\ (\alpha_m \boldsymbol{M}(t)|\boldsymbol{M}'(t)) + (\beta_m \boldsymbol{M}''(t)|\boldsymbol{M}'(t)) = (\boldsymbol{H}(t)|\boldsymbol{M}'(t)). \end{cases}$$

Substituting in the previous relation, one obtains the energy conservation relation for dispersive media governed by the Lorentz model,

$$\frac{dW_d}{dt}(t) = -(\boldsymbol{J}(t)|\boldsymbol{E}(t)), \quad t > 0\,, \tag{5.19}$$

$$\text{where } W_d(t) := W(t) + \frac{1}{2}\Big\{(\alpha_e \boldsymbol{P}(t)|\boldsymbol{P}(t)) + (\beta_e \boldsymbol{P}'(t)|\boldsymbol{P}'(t)) + (\alpha_m \boldsymbol{M}(t)|\boldsymbol{M}(t)) + (\beta_m \boldsymbol{M}'(t)|\boldsymbol{M}'(t))\Big\}.$$

Note that the result can be extended to the case when there is an electric Lorentz material only in $\Omega_e := int(\{\boldsymbol{x} \in \mathbb{R}^3 \ :\ \omega_{p,e}(\boldsymbol{x}) \neq 0\})$, and a magnetic Lorentz material only in $\Omega_m := int(\{\boldsymbol{x} \in \mathbb{R}^3 \ :\ \omega_{p,m}(\boldsymbol{x}) \neq 0\})$. As a matter of fact, one may proceed as before, defining, in (5.13-5.14), the electric polarization only on Ω_e, respectively the magnetic polarization only on Ω_m. In this case, the previous computations lead to the energy conservation relation (5.19) with

$$W_d(t) := W(t) + \frac{1}{2}\Big\{(\alpha_e \boldsymbol{P}(t), \boldsymbol{P}(t))_{\boldsymbol{L}^2(\Omega_e)} + (\beta_e \boldsymbol{P}'(t), \boldsymbol{P}'(t))_{\boldsymbol{L}^2(\Omega_e)} \\ +(\alpha_m \boldsymbol{M}(t), \boldsymbol{M}(t))_{\boldsymbol{L}^2(\Omega_m)} + (\beta_m \boldsymbol{M}'(t), \boldsymbol{M}'(t))_{\boldsymbol{L}^2(\Omega_m)}\Big\}.$$

Truncated exterior problem

Let us consider the case of an exterior problem, such as a diffraction problem around a perfectly conducting object. In this case, to perform computations, one adjusts the domain (§1.6.1): this results in a *truncated exterior problem*, set in a computational domain Ω that has a boundary Γ equal to $\Gamma_P \cup \Gamma_A$, with $\Gamma_P \cap \Gamma_A = \emptyset$. Here, Γ_P is the "physical" part on which the perfect conductor boundary condition is imposed, and Γ_A is purely "artificial". For instance, let us choose Γ_A to be a sphere, on which an absorbing boundary condition (referred to as an ABC from now on) is imposed, such as the Silver–Müller ABC (1.137) or (1.138). One usually assumes that the medium is homogeneous[2] in a neighborhood of Γ_A, so it writes:

$$\boldsymbol{E}(t) \times \boldsymbol{n} + \sqrt{\frac{\mu}{\varepsilon}} \boldsymbol{H}_\top(t) = \boldsymbol{g}^\star(t) \text{ on } \Gamma_A\,, \tag{5.20}$$

where we recall that $\boldsymbol{H}_\top(t)$ denote the tangential components of $\boldsymbol{H}(t)$ on the boundary and $\boldsymbol{g}^\star$ is the data on Γ_A. On the other hand, for the truncated exterior problem, one finds the relation below, using the integration-by-parts formula (3.5):

$$\frac{dW}{dt}(t) - {}_{\gamma_A}\langle \boldsymbol{E}(t) \times \boldsymbol{n}, \boldsymbol{H}_\top(t)\rangle_{\pi_A} = -(\boldsymbol{J}(t)|\boldsymbol{E}(t)), \quad t > 0\,. \tag{5.21}$$

Above, the duality bracket reduces to Γ_A, because $\boldsymbol{E} \times \boldsymbol{n} = 0$ on Γ_P. Hence, the index ${}_A$. Note that there is no need to use the theory summarized in Theorem 3.1.29, because in the present case, $\Gamma_P \cap \Gamma_A = \emptyset$.
It is possible to address uniqueness as before. Indeed, one now obtains that

$$\delta\boldsymbol{E}(t) \times \boldsymbol{n} + \sqrt{\frac{\mu}{\varepsilon}} \delta\boldsymbol{H}_\top(t) = 0 \text{ on } \Gamma_A,$$

together with the relation

$$\frac{d}{dt}\left[\frac{1}{2}\{(\mathbb{e}\delta\boldsymbol{E}(t)|\delta\boldsymbol{E}(t)) + (\mathbb{m}\delta\boldsymbol{H}(t)|\delta\boldsymbol{H}(t))\}\right] \\ -{}_{\gamma_A}\langle \delta\boldsymbol{E}(t) \times \boldsymbol{n}, \delta\boldsymbol{H}_\top(t)\rangle_{\pi_A} = 0, \quad t > 0. \tag{5.22}$$

[2] Since one can choose where to put the artificial boundary Γ_A, it is a reasonable assumption. Also, because Γ_A is smooth, one has

$$\boldsymbol{H}_\parallel^{1/2}(\Gamma_A) = \boldsymbol{H}_\perp^{1/2}(\Gamma_A) = \boldsymbol{H}_t^{1/2}(\Gamma_A), \text{ where } \boldsymbol{H}_t^{1/2}(\Gamma_A) := \boldsymbol{L}_t^2(\Gamma_A) \cap \boldsymbol{H}^{1/2}(\Gamma_A),$$

and similarly for the dual spaces, $\boldsymbol{H}_\parallel^{-1/2}(\Gamma_A) = \boldsymbol{H}_\perp^{-1/2}(\Gamma_A) = \boldsymbol{H}_t^{-1/2}(\Gamma_A)$.

According to Theorem 3.1.22, one can write on Γ_A (and given $t > 0$)

$$\delta \boldsymbol{E}(t) \times \boldsymbol{n} = \mathbf{curl}_\Gamma\, \phi^- + \mathbf{grad}_\Gamma\, \psi^+,\ \phi^- \in H^{1/2}_{zmv}(\Gamma_A),\ \psi^+ \in \mathcal{H}(\Gamma_A)\,;$$
$$\delta \boldsymbol{H}_\top(t) = \mathbf{grad}_\Gamma\, \psi^- + \mathbf{curl}_\Gamma\, \phi^+,\ \psi^- \in H^{1/2}_{zmv}(\Gamma_A),\ \phi^+ \in \mathcal{H}(\Gamma_A)\,;$$

the scalar potentials $\phi^-, \psi^+, \psi^-, \phi^+$ being unique. Using the homogeneous Silver–Müller ABC yields

$$\mathbf{curl}_\Gamma \left(\phi^- + \sqrt{\frac{\mu}{\varepsilon}}\phi^+\right) + \mathbf{grad}_\Gamma \left(\psi^+ + \sqrt{\frac{\mu}{\varepsilon}}\psi^-\right) = 0 \text{ on } \Gamma_A.$$

In particular, one has $\phi := \phi^- + \sqrt{\mu/\varepsilon}\phi^+ \in H^{1/2}(\Gamma_A) \subset L^2(\Gamma_A)$, and ϕ is harmonic, i.e., $\Delta_\Gamma \phi = 0$ on Γ_A. The artificial boundary being a sphere, we have that ϕ is globally smooth on Γ_A, and in particular, $\phi \in H^1(\Gamma_A)$ (see, for instance, [60, 200], or Chapter 5 of [168]). As a consequence, it vanishes:

$$0 = \int_{\Gamma_A} \phi\, \Delta_\Gamma \phi\, d\Gamma = -\int_{\Gamma_A} |\,\mathbf{grad}_\Gamma\, \phi|^2\, d\Gamma. \tag{5.23}$$

Likewise, $\psi^+ + \sqrt{\mu/\varepsilon}\psi^-$ also vanishes. It follows that ϕ^- and ψ^- actually belong to $H^1(\Gamma_A)$, so that both $\delta \boldsymbol{E}(t) \times \boldsymbol{n}_{|\Gamma_A}$ and $\delta \boldsymbol{H}_\top(t)_{|\Gamma_A}$ are fields of $\boldsymbol{L}^2_t(\Gamma_A)$, and furthermore, one can replace the duality product with an integral in the relation (5.22):

$$-{}_{\gamma_A}\langle \delta \boldsymbol{E}(t) \times \boldsymbol{n}, \delta \boldsymbol{H}_\top(t)\rangle_{\pi_A} = \sqrt{\frac{\mu}{\varepsilon}} \int_{\Gamma_A} |\delta \boldsymbol{H}_\top(t)|^2\, d\Gamma = \sqrt{\frac{\varepsilon}{\mu}} \int_{\Gamma_A} |\delta \boldsymbol{E}(t) \times \boldsymbol{n}|^2\, d\Gamma.$$

Hence, this quantity is always greater than or equal to 0. Using the initial condition together with assumption (5.10), one concludes that uniqueness holds for the truncated exterior problem too: (5.12) is fulfilled.

Remark 5.1.5 *In the case of a smooth (artificial) boundary Γ_A, we have also proven that it holds that*

$$\boldsymbol{H}^{-1/2}_{\parallel}(\mathrm{div}_\Gamma, \Gamma_A) \cap \boldsymbol{H}^{-1/2}_{\perp}(\mathrm{curl}_\Gamma, \Gamma_A) \subset \boldsymbol{L}^2_t(\Gamma_A).$$

This result has already been obtained in [34].

Truncated interior problem

At first glance, it appears that one can tackle the case of a *truncated interior problem* similarly. The first difference with the previous study is that it can happen that $\partial\Gamma_P \cap \partial\Gamma_A \neq \emptyset$([3]). In this situation, one needs to use the integration-by-parts formula of Theorem 3.1.29, to find

[3] If $\partial\Gamma_P \cap \partial\Gamma_A = \emptyset$, one still needs to address the possible lack of regularity of the artificial boundary (see Remark 5.1.6). This corresponds to configurations 2 and 3 of Γ_A in the study below.

$$\frac{dW}{dt}(t) - {}_{\gamma_A^0}\langle \boldsymbol{E}(t)\times\boldsymbol{n}, \boldsymbol{H}_\top(t)\rangle_{\pi_A} = -(\boldsymbol{J}(t)|\boldsymbol{E}(t)), \quad t>0\,. \tag{5.24}$$

In other words, the duality product has been modified, to take into account the fact that $\partial\Gamma_A \neq \emptyset$. We consider from now on that $\partial\Gamma_A$ is piecewise curvilinear. Let $\boldsymbol{\nu}$ be the unit outward normal vector to $\partial\Gamma_A$, and $\boldsymbol{\tau}$ the unit tangent vector to $\partial\Gamma_A$ so that $(\boldsymbol{\tau},\boldsymbol{\nu})$ is direct. As before, to prove uniqueness, we build a relation like (5.22). The obvious difficulty in the present situation is to obtain some decompositions of the traces, *with boundary conditions* on $\partial\Gamma_A$. We propose below a constructive proof (for the magnetic field), thus complementing the process we described in §3.1.

First, thanks to Proposition 3.1.27, we can write on Γ_A (for a given $t>0$)

$$\delta\boldsymbol{E}(t)\times\boldsymbol{n} = \mathbf{curl}_\Gamma\,\underline{\phi}^- + \mathbf{grad}_\Gamma\,\underline{\psi}^+,\ \underline{\phi}^- \in \widetilde{H}^{1/2}(\Gamma_A),\ \underline{\psi}^+ \in \mathcal{H}_\nu(\Gamma_A).$$

Note that we have, in a weak sense, $t_{\boldsymbol{\nu}}(\delta\boldsymbol{E}(t)\times\boldsymbol{n}_{|\Gamma_A}) = 0$ on $\partial\Gamma_A$, where we recall that $t_{\boldsymbol{\nu}}(\boldsymbol{f}) := \boldsymbol{f}\cdot\boldsymbol{\nu}_{|\partial\Gamma_A}$, and similarly for $\mathbf{grad}_\Gamma\,\underline{\psi}^+$ (see the definition of $\mathcal{H}_\nu(\Gamma_A)$). Hence, we have at hand some boundary conditions for the trace of the electric field.

Second, starting from the "usual" result for $\delta\boldsymbol{H}_\top(t)$ on Γ, and then taking its restriction to Γ_A, we derive another decomposition: however, it lacks boundary conditions on $\partial\Gamma_A$. To address this problem, recall that the ABC writes $\delta\boldsymbol{H}_\top(t) = -\sqrt{\varepsilon/\mu}\,\delta\boldsymbol{E}(t)\times\boldsymbol{n}$ on Γ_A, so that one actually has $\delta\boldsymbol{H}_\top(t)_{|\Gamma_A} \in \widetilde{\boldsymbol{H}}_\parallel^{-1/2}(\Gamma_A)$ and the boundary condition $t_{\boldsymbol{\nu}}(\delta\boldsymbol{H}_\top(t)_{|\Gamma_A}) = 0$ on $\partial\Gamma_A$.
Now, let us build the decomposition with this additional information at hand. We know that the trace of the magnetic field is such that $\mathrm{curl}_\Gamma(\delta\boldsymbol{H}_\top(t)_{|\Gamma_A}) \in \widetilde{H}^{-1/2}(\Gamma_A)$ (see Theorem 3.1.26). Hence, there exists one, and only one, $\underline{\phi}^+ \in H_0^1(\Gamma_A)$ such that[4] $-\Delta_\Gamma\underline{\phi}^+ = \mathrm{curl}_\Gamma(\delta\boldsymbol{H}_\top(t)_{|\Gamma_A})$ in Γ_A. The scalar field $\underline{\phi}^+$ belongs to

$$\mathcal{H}_0(\Gamma_A) := \{f \in H_0^1(\Gamma_A)\ :\ \Delta_\Gamma f \in \widetilde{H}^{-1/2}(\Gamma_A)\}.$$

Because $\underline{\phi}^+$ has a vanishing trace on $\partial\Gamma_A$, its gradient has a vanishing tangential trace (cf. Proposition 2.2.10), which writes $\mathbf{grad}_\Gamma\,\underline{\phi}^+\cdot\boldsymbol{\tau}_{|\partial\Gamma_A} = 0$, or

[4] One applies the Lax-Milgram Theorem 4.2.8 to the equivalent variational form:

$$\begin{cases} \textit{Find } \underline{\phi}^+ \in H_0^1(\Gamma_A) \textit{ such that} \\ \forall v \in H_0^1(\Gamma_A),\ (\mathbf{curl}_\Gamma\,\underline{\phi}^+, \mathbf{curl}_\Gamma\, v)_{\boldsymbol{L}_t^2(\Gamma_A)} = \langle \mathrm{curl}_\Gamma(\delta\boldsymbol{H}_\top(t)_{|\Gamma_A}), v\rangle_{H_0^1(\Gamma_A)} \end{cases}.$$

If Γ_A is not a connected set, one chooses – instead of $H_0^1(\Gamma_A)$ – the space

$$\{f \in H^1(\Gamma_A)\ :\ f_{|\partial\Gamma_A^0} = 0,\ f_{|\partial\Gamma_A^k} = cst_k,\ 1\le k\le K_A\},$$

where $(\Gamma_A^k)_{k=0,K_A}$ are the (maximal) connected components of Γ_A.

equivalently, $\mathbf{curl}_\Gamma\, \underline{\phi}^+ \cdot \boldsymbol{\nu}_{|\partial\Gamma_A} = 0$, that is, $t_{\boldsymbol{\nu}}(\mathbf{curl}_\Gamma\, \underline{\phi}^+) = 0$ on $\partial\Gamma_A$. Taking into account the ABC, the difference $\boldsymbol{w} = \delta\boldsymbol{H}_\top(t)_{|\,\Gamma_A} - \mathbf{curl}_\Gamma\, \underline{\phi}^+$ is such that:

$$\boldsymbol{w} \in \widetilde{\boldsymbol{H}}_{\parallel}^{-1/2}(\Gamma_A),\ \mathrm{curl}_\Gamma\, \boldsymbol{w} = 0 \text{ in } \Gamma_A,\ \text{and } t_{\boldsymbol{\nu}}(\boldsymbol{w}) = 0 \text{ on } \partial\Gamma_A.$$

Finally, using an existence result of [68], namely Proposition 6.2 (with $_\parallel$ replacing $_\perp$), the first two properties satisfied by $\boldsymbol{w}$ yield that there exists $\underline{\psi}^- \in H^{1/2}(\Gamma_A)$ such that $\boldsymbol{w} = \mathbf{grad}_\Gamma\, \underline{\psi}^-$ in Γ_A. For this result to hold, we assume – for simplicity – that Γ_A is topologically trivial, cf. §3.2. We conclude that we can write on Γ_A a decomposition for the trace of the magnetic field with boundary conditions, which writes (for a given $t > 0$)

$$\delta\boldsymbol{H}_\top(t) = \mathbf{curl}_\Gamma\, \underline{\phi}^+ + \mathbf{grad}_\Gamma\, \underline{\psi}^-,\ \underline{\phi}^+ \in \mathcal{H}_0(\Gamma_A),\ \underline{\psi}^- \in H^{1/2}(\Gamma_A),\ t_{\boldsymbol{\nu}}(\mathbf{grad}_\Gamma\, \underline{\psi}^-) = 0.$$

The homogeneous Silver–Müller ABC writes

$$\mathbf{curl}_\Gamma \left(\underline{\phi}^- + \sqrt{\frac{\mu}{\varepsilon}}\underline{\phi}^+\right) + \mathbf{grad}_\Gamma \left(\underline{\psi}^+ + \sqrt{\frac{\mu}{\varepsilon}}\underline{\psi}^-\right) = 0 \text{ on } \Gamma_A,$$

with boundary conditions on both $\underline{\phi}^- + \sqrt{\mu/\varepsilon}\underline{\phi}^+$ and $\underline{\psi}^+ + \sqrt{\mu/\varepsilon}\underline{\psi}^-$. Focusing, for instance, on $\underline{\phi} := \underline{\phi}^- + \sqrt{\mu/\varepsilon}\underline{\phi}^+$, we have obtained so far that:

$$\underline{\phi} \in \widetilde{H}^{1/2}(\Gamma_A),\ \Delta_\Gamma \underline{\phi} = 0 \text{ in } \Gamma_A.$$

In other words, we are looking for solutions to the Laplace-Beltrami problem with homogeneous Dirichlet boundary condition and right-hand side, *with at least $H^{1/2}$-regularity*. Note that if $\underline{\phi}$ belongs to $H^1(\Gamma_A)$, then one finds automatically that $\underline{\phi} = 0$, using the same integration by parts as in (5.23). So, we are interested in finding *singular solutions* to the Laplace-Beltrami problem, that is, solutions that are in $H^{1/2}(\Gamma_A) \setminus H^1(\Gamma_A)$.

To address this issue, we split the study[5] into three kinds of artificial boundary:

1. Γ_A is part of a single face;
2. Γ_A is part of the reunion of two adjacent faces;
3. Γ_A contains a neighborhood of one of the vertices of Γ.

Remark 5.1.6 *Note that configurations 2. and 3. also cover the case of a piecewise smooth, but not globally smooth, artificial boundary, even in the case when $\partial\Gamma_A = \emptyset$: proving that the solution is not singular allows one to conclude that it vanishes, thanks to (5.23).*

[5] For $\underline{\psi} = \underline{\psi}^+ + \sqrt{\mu/\varepsilon}\underline{\psi}^-$, we have: $\underline{\psi} \in H^{1/2}(\Gamma_A)$, $\Delta_\Gamma \underline{\psi} = 0$ in Γ_A, $t_{\boldsymbol{\nu}}(\mathbf{grad}_\Gamma\, \underline{\psi}) = 0$. In this case, we are looking for singular solutions (with at least $H^{1/2}$-regularity) to the Laplace-Beltrami problem with homogeneous Neumann boundary condition and right-hand side. Completely similar analyses can be carried out for $\underline{\psi}$: they yield the same results as for $\underline{\phi}$.

For simplicity, we assume that Ω is a polyhedral domain.

1. Γ_A is part of a single face: based on the theory of singularities of the Laplace operator in a polygon [126, Rmk 2.4.6. p. 59], one finds, by inspection, that $\underline{\phi} = 0$. Indeed, though there are singular solutions to the Poisson equation with homogeneous data set in a polygon Γ_A, none of them are in $H^{1/2}(\Gamma_A) \setminus H^1(\Gamma_A)$.
2. Γ_A is part of Γ_{ij}, the reunion of two adjacent faces Γ_i and Γ_j. For short, we use the notations $\Gamma_A := \Gamma_i \cup \Gamma_j \cup e_{ij}$, as in Definition 2.1.54, and define, for $k = i, j$,

$$D(\Delta_\Gamma, L^2(\Gamma_k)) := \{f \in L^2(\Gamma_k) \ : \ \Delta_\Gamma f \in L^2(\Gamma_k)\}.$$

By construction, one has $\underline{\phi}_k := (\underline{\phi})_{|\Gamma_k} \in D(\Delta_\Gamma, L^2(\Gamma_k))$, for $k = i, j$. As a consequence of Theorem 1.5.2 of [126], the traces of $\underline{\phi}_i$ and $\underline{\phi}_j$ on the line e_{ij} have a meaning in $\widetilde{H}^{-1/2}(e_{ij})$ (Definition 2.1.53). Similarly for the traces of the normal derivatives, which have a meaning in $\widetilde{H}^{-3/2}(e_{ij})$ (Definition 3.1.9).
In addition, we know that $\underline{\phi}$ belongs globally to $H^{1/2}(\Gamma_A)$ and that $\Delta_\Gamma \underline{\phi}$ belongs to $L^2(\Gamma_{ij})$ (because $\underline{\phi}$ is harmonic on Γ_{ij}), so the traces match: $(\underline{\phi}_i)_{|e_{ij}} = (\underline{\phi}_j)_{|e_{ij}}$.
As far as the traces of the normal derivatives are concerned, one can easily check that

$$\frac{\partial \underline{\phi}_i}{\partial \tau_i} = \frac{\partial \underline{\phi}_j}{\partial \tau_j} \text{ on } e_{ij}.$$

As a consequence, if one goes back to the plane parameterized by $(\boldsymbol{\tau}_{ij}, \boldsymbol{\tau}_i)$ in Γ_i, respectively $(\boldsymbol{\tau}_{ij}, \boldsymbol{\tau}_j)$ in Γ_j, we find that (* refers to the parametric plane):

$$\underline{\phi}^\star \in \widetilde{H}^{1/2}(\Gamma_A^\star), \ \Delta \underline{\phi}^\star = 0 \text{ in } \Gamma_A^\star.$$

Using the same result as in 1., we conclude that $\underline{\phi}^\star = 0$. Hence, $\underline{\phi} = 0$ and there are no singular solutions in this case either.
3. Γ_A contains a neighborhood of one of the vertices of Γ, called v. For short, we use the notations $\Gamma_A := \Gamma_1 \cup \cdots \cup \Gamma_K \cup e_{12} \cup \cdots \cup e_{K1} \cup \{v\}$, where $(\Gamma_k)_{1 \le k \le K}$ are the faces with v as one of their vertices. Proceeding as before, we remark that $\underline{\phi}_k := (\underline{\phi})_{|\Gamma_k}$, $1 \le k \le K$, are such that

$$\begin{cases} \underline{\phi}_k \in D(\Delta_\Gamma, L^2(\Gamma_k)), \ \Delta_\Gamma \underline{\phi}_k = 0 \text{ in } \Gamma_k, \\ \underline{\phi}_k = \underline{\phi}_{k+1} \text{ and } \dfrac{\partial \underline{\phi}_k}{\partial \tau_k} = \dfrac{\partial \underline{\phi}_{k+1}}{\partial \tau_{k+1}} \text{ on } e_{k,k+1}, \end{cases} \quad 1 \le k \le K. \tag{5.25}$$

(With the convention that $K + 1 = 1$). On the artificial boundary, near v, we use polar coordinates in Γ_k: (r, θ), $\theta \in]\theta_k, \theta_{k+1}[$, with $\theta_1 = 0$ and $\theta_{K+1} = \theta_{max}$ can be any positive number. Due to 1 and 2, we know that, outside any neighborhood of the vertex v, $\underline{\phi}$ is of H^1-regularity. So, from

now on, we focus on its *local behavior* (for "small" r, i.e., for $r \in]0, r_0[$ with $r_0 > 0$). Expressing (5.25) in polar coordinates, we find, by direct computations (see also §2.3 in [126]), that the solution to this problem locally belongs to

$$\mathrm{span}_{\lambda \in \Lambda}(r^\lambda \varphi_\lambda(\theta)),$$

where $(\varphi_\lambda)_\lambda$ are eigenfunctions of the operator $\varphi \mapsto -\varphi''$ on $[0, \theta_{max}]$ with periodic boundary conditions, and the numbers λ are such that $\phi_\lambda : (r, \theta) \mapsto r^\lambda \varphi_\lambda(\theta)$ locally solves (5.25). In other words, one has

$$\Lambda = \frac{2\pi}{\theta_{max}}\mathbb{Z}, \text{ and } \forall \lambda \in \Lambda,\ \varphi_\lambda = \exp(\imath \lambda \theta).$$

Note that φ_λ always belongs to $C^\infty_{per}([0, \theta_{max}])$.
If $\lambda = 0$, then $\phi_0 = 1$, i.e., the eigenfunction ϕ_0 is constant. Since we are interested in $\mathbf{curl}_\Gamma \underline{\phi}$, this is of no importance.[6]
In $\Lambda \setminus \{0\}$, the question is: can we find a value λ such that $\phi_\lambda(r, \theta) = r^\lambda \varphi_\lambda(\theta)$ belongs to $H^{1/2}$, but not to H^1, locally ? Due to the smoothness of the angular part φ_λ, using Theorem 1.2.18 of [126], we know that:

$$\phi_\lambda \in H^{1/2} \iff \lambda > -\frac{1}{2}\,;\ \phi_\lambda \notin H^1 \iff \lambda < 0.$$

Because of the structure of Λ, we look for $m \in \mathbb{Z} \setminus \{0\}$ such that

$$-\frac{1}{2} < \frac{2\pi\, m}{\theta_{max}} < 0, \text{ i.e., } -\frac{\theta_{max}}{4\pi} < m < 0.$$

Hence,

- either $\theta_{max} \leq 4\pi$: there is no solution $m \in \mathbb{Z} \setminus \{0\}$;
- or $\theta_{max} > 4\pi$ (the vertex is said to be *pathological*): there is at least one solution, $m = -1$. Nonetheless, the space $\mathrm{span}_{-1/2<\lambda<0}(r^\lambda \varphi_\lambda(\theta))$ of locally singular solutions remains finite-dimensional. Classically, these local solutions can be continued to Γ_A with the help of a smooth cut-off function, so one gets singular solutions to the Laplace-Beltrami problem.

In other words, if $\theta_{max} \leq 4\pi$ then there are no singular solutions to the Laplace-Beltrami problems, whereas if $\theta_{max} > 4\pi$, then there exist singular solutions. In this latter case, one checks directly that the singular solutions are at least of H^t regularity for some $t := t(\theta_{max}) > 1/2$.

Remark 5.1.7 *In the case of a cubic vertex (configuration 3.), one has $\theta_{max} = 3 \times \pi/2$, which is still short of the limit value 4π. So, if one chooses*

[6] More precisely, we recall that, if $\underline{\phi}$ belongs to $H^1(\Gamma_A)$ with $\underline{\phi}_{|\partial\Gamma_A} = 0$, we apply the integration by parts (5.23) to find that $\mathbf{curl}_\Gamma \underline{\phi} = 0$. If one replaces $\underline{\phi}$ with $\underline{\phi}' = \underline{\phi} + c$ with $c \neq 0$, then the technique still applies (even though $\underline{\phi}'_{|\partial\Gamma_A} \neq 0$), because $\Delta_\Gamma \underline{\phi}' = 0$. So, the local constant behavior can be neglected.

a "reasonable" artificial boundary, there will be no singular solutions to the Laplace-Beltrami problems. On the other hand, as noted in [69], θ_{max} can be made as large as possible, hence one must choose the artificial boundary with some care to avoid creating pathological vertices.

The general conclusion is that, when all interior vertices of the artificial boundary Γ_A are such that the sum of the angles of incident faces is lower than or equal to 4π (i.e., there are no pathological vertices), there are no singular solutions to the Laplace-Beltrami problems. One concludes[7] that $\underline{\phi} = \underline{\psi} = 0$, and hence $\underline{\phi}^-$ and $\underline{\psi}^-$ both belong to $H^1(\Gamma_A)$. We then proceed as we did for the truncated exterior problem, replacing the duality product in (5.24) with an integral:

$$-{}_{\gamma_A^0}\langle \delta \boldsymbol{E}(t) \times \boldsymbol{n}, \delta \boldsymbol{H}_\top(t) \rangle_{\pi_A} = \sqrt{\frac{\mu}{\varepsilon}} \int_{\Gamma_A} |\delta \boldsymbol{H}_\top(t)|^2 \, d\Gamma = \sqrt{\frac{\varepsilon}{\mu}} \int_{\Gamma_A} |\delta \boldsymbol{E}(t) \times \boldsymbol{n}|^2 \, d\Gamma.$$

Therefore, uniqueness holds, in the sense that (5.12) is fulfilled.

Remark 5.1.8 *In the case of an artificial boundary Γ_A with no pathological vertices, we have also proven that it holds that*

$$\boldsymbol{H}_{\|,0}^{-1/2}(\mathrm{div}_\Gamma, \Gamma_A) \cap \widetilde{\boldsymbol{H}}_\perp^{-1/2}(\mathrm{curl}_\Gamma, \Gamma_A) \subset \boldsymbol{L}_t^2(\Gamma_A).$$

When $\partial\Gamma_A = \emptyset$, the imbedding writes like the one from Remark 5.1.5.

On the other hand, it can happen that at least one interior vertex of Γ_A is pathological. In this case, there is at least one singular solution to the Laplace-Beltrami problem and, as a consequence, $\underline{\phi} \notin H^1(\Gamma_A)$ and/or $\underline{\psi} \notin H^1(\Gamma_A)$ in general.

Remark 5.1.9 *In the case of an artificial boundary Γ_A with at least one pathological vertex, we have proven that:*

$$\boldsymbol{H}_{\|,0}^{-1/2}(\mathrm{div}_\Gamma, \Gamma_A) \cap \widetilde{\boldsymbol{H}}_\perp^{-1/2}(\mathrm{curl}_\Gamma, \Gamma_A) \not\subset \boldsymbol{L}_t^2(\Gamma_A).$$

In this situation, when $\partial\Gamma_A = \emptyset$, the imbedding of Remark 5.1.5 is false.

Because of this insufficient regularity, we cannot conclude, as we normally would, on the establishment of uniqueness, replacing the duality product with an integral. However, we have proven (cf. 1. and 2.) that both $\underline{\phi} \neq 0$ and $\underline{\psi} \neq 0$ are of H^1-regularity outside any neighborhood of the pathological vertex/vertices. In terms of the traces of the electromagnetic fields on Γ_A, this means that $\delta \boldsymbol{E}(t) \times \boldsymbol{n}$ and $\delta \boldsymbol{H}_\top(t)$ are of $\boldsymbol{L}_t^2$ regularity outside any neighborhood of the pathological vertex/vertices. Due to this property, one can recover uniqueness.

[7] See footnote [5], p. 189.

To simplify the notations, let us assume there is a single pathological vertex v, and denote by ρ_v the distance to v. Then, let $\chi \in \mathcal{D}(\mathbb{R})$ be a cut-off function, which is equal to 1 in a neighborhood of 0. Given $\boldsymbol{w} \in \boldsymbol{H}(\mathbf{curl}, \Omega)$, one can prove (similarly to §2 of [90] or Lemma 4.6 of [17]) that the sequence $(\chi(k\rho_v)\boldsymbol{w})_k$ goes to 0 in $\boldsymbol{H}(\mathbf{curl}, \Omega)$. If we apply this result to $\boldsymbol{w} = \delta\boldsymbol{E}(t)$, we conclude that the sequence $(\delta\boldsymbol{E}_k)_k$, with $\delta\boldsymbol{E}_k := (1-\chi(k\rho_v))\delta\boldsymbol{E}(t)$, converges to $\delta\boldsymbol{E}(t)$ in $\boldsymbol{H}(\mathbf{curl}, \Omega)$; furthermore, one has $\delta\boldsymbol{E}_k \times \boldsymbol{n}_{|\Gamma_P} = 0$ for k large enough. Similarly, the sequence $(\delta\boldsymbol{H}_k)_k$, with $\delta\boldsymbol{H}_k := (1 - \chi(k\rho_v))\delta\boldsymbol{H}(t)$, converges to $\delta\boldsymbol{H}(t)$ in $\boldsymbol{H}(\mathbf{curl}, \Omega)$. By the continuity of the tangential trace mapping (cf. Theorem 3.1.28) and of the tangential components mapping (cf. Theorem 3.1.26), we obtain that

$$ {}_{\gamma_A^0}\langle \delta\boldsymbol{E}(t) \times \boldsymbol{n}, \delta\boldsymbol{H}_\top(t)\rangle_{\pi_A} = \lim_{k\to\infty} {}_{\gamma_A^0}\langle \delta\boldsymbol{E}_k \times \boldsymbol{n}, (\delta\boldsymbol{H}_k)_\top\rangle_{\pi_A}. $$

Because of the truncation function, we know that the traces of both $\delta\boldsymbol{E}_k \times \boldsymbol{n}$ and $(\delta\boldsymbol{H}_k)_\top$ belong to $\boldsymbol{L}^2_t(\Gamma_A)$. What is more, it holds that

$$ \delta\boldsymbol{E}_k \times \boldsymbol{n} + \sqrt{\frac{\mu}{\varepsilon}}(\delta\boldsymbol{H}_k)_\top = 0 \text{ on } \Gamma_A, $$

so we conclude that, for instance,

$$ {}_{\gamma_A^0}\langle \delta\boldsymbol{E}(t) \times \boldsymbol{n}, \delta\boldsymbol{H}_\top(t)\rangle_{\pi_A} = -\sqrt{\frac{\mu}{\varepsilon}} \lim_{k\to\infty} \int_{\Gamma_A} |(\delta\boldsymbol{H}_k)_\top|^2 \, d\Gamma. $$

Hence, passing to the limit yields uniqueness ((5.12) is fulfilled), because

$$ -{}_{\gamma_A^0}\langle \delta\boldsymbol{E}(t) \times \boldsymbol{n}, \delta\boldsymbol{H}_\top(t)\rangle_{\pi_A} \geq 0. \tag{5.26} $$

Conclusion

Let us recapitulate the results we have proven concerning the uniqueness of the electromagnetic fields.

Theorem 5.1.10 *Consider a perfect medium, characterized by the tensor fields $\mathbb{e}$ and $\mathbb{\mu}$. If $\mathbb{e}$ and $\mathbb{\mu}$ fulfill assumption (5.10), one has uniqueness of the electromagnetic fields, for the configurations below:*

- *in $\mathbb{R}^3$;*
- *in a domain encased in a perfect conductor (cavity problem);*
- *for the exact and truncated exterior problems around a perfectly conducting obstacle;*
- *for the exact and truncated interior problems around a perfectly conducting device.*

In the truncated settings, the artificial boundary Γ_A is either a smooth manifold, or a manifold with corners and edges.

This result is also valid for a Lorentz material without damping in the same configurations,[8] *as well as in the more general setting where there is an electric Lorentz material for which the (electric) plasma pulsation* $\omega_{p,e}$ *is nonzero, and a magnetic Lorentz material for which the (analogously defined) magnetic pulsation* $\omega_{p,m}$ *is nonzero, cf. [72].*

5.1.3 Comments

For the truncated exterior problem, the issue of the uniqueness of the electromagnetic fields has also been addressed in [175], using a different approach than the one we proposed in §5.1.2. For the case of a topologically non-trivial artificial boundary (extraction of a scalar potential $\underline{\psi}^-$), we refer the reader to [66].
When the artificial boundary is not globally smooth, we refer to [69] for complementary results on the regularity of the scalar potentials of the traces of the electromagnetic fields.
The regularity of potentials is also alluded to in [33]. However, the results of Remark 5.1.9 are different from the regularity results obtained in that paper. The difference comes from the fact that one can exhibit singular solutions to the Laplace-Beltrami problems when the artificial boundary contains at least one pathological vertex, a fact that has been overlooked in [33].

5.2 Well-posedness

Our aim here is to solve Maxwell's equations rigorously. In particular, to obtain well-posedness under some *ad hoc* assumptions about the data. For that, we shall use the Stone Theorem 4.3.6 or the Hille-Yosida Theorem 4.3.2, which we apply to the *first-order in time* Maxwell equations. We recall that the abstract form of a first-order time-dependent problem is to find $u \,:\, t \mapsto u(t)$ with values in a function space V for $t \geq 0$, governed by

$$\begin{cases} \textit{Find } u \textit{ such that} \\ \dfrac{du}{dt} + Au = f, \quad t > 0, \\ u(0) = u_0. \end{cases}$$

Maxwell's equations are set either in $\mathbb{R}^3$, in the exterior of a perfectly conducting body, or in a domain encased in a perfect conductor. Finally, we address the case of a truncated exterior problem.

[8] One can easily check that the energy conservation relation (5.19) can be modified, as in the "Truncated exterior problem" and "Truncated interior problem" sections, if a Silver–Müller ABC is imposed on part of the boundary. Again, this ensures energy control and uniqueness.

5.2.1 In a homogeneous medium

We begin with the simple case of a homogeneous medium in $\Omega = \mathbb{R}^3$; or in an unbounded open subset $\Omega = \mathbb{R}^3 \setminus \overline{O}$ of $\mathbb{R}^3$ of category (C2), where O is a bounded, perfectly conducting body ; or finally, in a domain $\Omega \subset \mathbb{R}^3$ encased in a perfect conductor.[9] To fix ideas, we solve the Maxwell's system of equations (5.3-5.7) with unit permittivity and permeability, i.e., $(\mathbb{e}, \mathbb{\mu}) = (\mathbb{I}_3, \mathbb{I}_3)$, with the minimal regularity of the electromagnetic fields, as in (5.2). For the exterior of a body and for a domain, the system is supplemented with the boundary conditions (5.8) and (5.9). We remark that Eqs. (5.5-5.6) can be seen as static constraints on the electromagnetic fields (see, for instance, Remark 5.1.2). On the other hand, (5.7) is their initial values, and Eqs. (5.3-5.4) describe their evolution in time, which we can reformulate equivalently as a first-order time-dependent problem. The quantities are, respectively, for Maxwell's equations set in a homogeneous medium (we add a superscript ^{h})

$$u^h = \begin{pmatrix} \boldsymbol{E} \\ \boldsymbol{H} \end{pmatrix}, \; A^h = \begin{pmatrix} 0 & -\mathbf{curl} \\ \mathbf{curl} & 0 \end{pmatrix}, \; f^h = \begin{pmatrix} -\boldsymbol{J} \\ 0 \end{pmatrix}, \; u_0^h = \begin{pmatrix} \boldsymbol{E}_0 \\ \boldsymbol{H}_0 \end{pmatrix}.$$

Next, we define the operator mathematically (and in particular, its domain), and we study some fundamental properties. Finally, with the help of Stone Theorem 4.3.6, we derive a well-posedness result.

The operator A^h is an unbounded operator of $V^h = \boldsymbol{L}^2(\Omega) \times \boldsymbol{L}^2(\Omega)$, and, following (5.2), we define its domain by

$$D(A^h) := \boldsymbol{H}_0(\mathbf{curl}, \Omega) \times \boldsymbol{H}(\mathbf{curl}, \Omega).$$

Remark 5.2.1 *The asymmetry in the definition of the domain of the operator A^h stems from (5.2). It plays a critical role in the cases of the exterior of a body and of a domain, with perfect conductor boundary conditions on part of, or all of, the boundary.*

We write elements $v \in V^h$ as $v = (\boldsymbol{V}^E, \boldsymbol{V}^H)^T$, etc. Then, V^h is endowed with the norm $\|v\|_{V^h} = (\|\boldsymbol{V}^E\|^2 + \|\boldsymbol{V}^H\|^2)^{1/2}$, with associated scalar product $(v, w)_{V^h} = (\boldsymbol{V}^E \mid \boldsymbol{W}^E) + (\boldsymbol{V}^H \mid \boldsymbol{W}^H)$.

Proposition 5.2.2 *The operator A^h is closed and skew-adjoint.*

Proof. To prove that A^h is closed, consider a sequence $(v_k)_k$ in $D(A^h)$ such that $(v_k, A^h v_k)_k$ converges to (v, w) in $V^h \times V^h$. In particular, if we let $v_k = (\boldsymbol{V}_k^E, \boldsymbol{V}_k^H)^T$, then $(\boldsymbol{V}_k^E)_k$ is actually a Cauchy sequence in $\boldsymbol{H}_0(\mathbf{curl}, \Omega)$, so it converges in this space (to a limit, say $\boldsymbol{V}_{lim}^E$). Similarly, $(\boldsymbol{V}_k^H)_k$ converges in $\boldsymbol{H}(\mathbf{curl}, \Omega)$ to $\boldsymbol{V}_{lim}^H$. As $(v_k)_k$ converges to v in V^h, we have $v = (\boldsymbol{V}_{lim}^E, \boldsymbol{V}_{lim}^H)^T$. Next, as $(Av_k)_k$ converges to w in V^h, we

[9] As shown in §5.1.1 and §5.1.2, these three settings exhibit similar properties. This is once more the case here.

have $w = (-\mathbf{curl}\,\boldsymbol{V}^H_{lim}, \mathbf{curl}\,\boldsymbol{V}^E_{lim})^T$, so we conclude that $w = Av$, hence $(v, w) \in D(A)$.
To prove that A^h is skew-adjoint, we first remark that $D(A^h)$ is dense in V^h, because $\boldsymbol{D}(\Omega) \times \boldsymbol{D}(\Omega)$ is a subset of $D(A^h)$.
Then, let us build its adjoint $(A^h)^*$. According to Definition 4.1.11, $w \in V^h$ belongs to the domain $D((A^h)^*)$ if the form

$$\begin{cases} v \mapsto (w, A^h v)_{V^h} \\ D(A^h) \to \mathbb{R} \end{cases},$$

is continuous, with respect to the norm $\|\cdot\|_{V^h}$. In this case, one has $((A^h)^* w, v)_{V^h} = (w, A^h v)_{V^h}$ for all $v \in D(A^h)$.
If one chooses $v \in \boldsymbol{D}(\Omega) \times \boldsymbol{D}(\Omega)$, one has

$$\begin{aligned}(w, A^h v)_{V^h} &= -(\boldsymbol{W}^E \mid \mathbf{curl}\,\boldsymbol{V}^H) + (\boldsymbol{W}^H \mid \mathbf{curl}\,\boldsymbol{V}^E) \\ &= -\langle \mathbf{curl}\,\boldsymbol{W}^E, \overline{\boldsymbol{V}^H}\rangle + \langle \mathbf{curl}\,\boldsymbol{W}^H, \overline{\boldsymbol{V}^E}\rangle.\end{aligned}$$

For the form to be continuous w.r.t. $\|\cdot\|_{V^h}$, $\boldsymbol{W}^E$ and $\boldsymbol{W}^H$ must belong to $\boldsymbol{H}(\mathbf{curl}, \Omega)$. Furthermore, by identification,

$$\forall v \in D(A^h),\ (w, A^h v)_{V^h} = -(\mathbf{curl}\,\boldsymbol{W}^E \mid \boldsymbol{V}^H) + (\mathbf{curl}\,\boldsymbol{W}^H \mid \boldsymbol{V}^E).$$

If $\Omega = \mathbb{R}^3$, recall that $\boldsymbol{H}_0(\mathbf{curl}, \mathbb{R}^3) = \boldsymbol{H}(\mathbf{curl}, \mathbb{R}^3)$. On the other hand, if Ω is the exterior of a body or a domain, to determine that $\boldsymbol{W}^E$ belongs to $\boldsymbol{H}_0(\mathbf{curl}, \Omega)$, one remarks that, by considering all elements of $D(A^h)$, it holds that

$$\forall \boldsymbol{V}^H \in \boldsymbol{H}(\mathbf{curl}, \Omega),\ (\boldsymbol{W}^E \mid \mathbf{curl}\,\boldsymbol{V}^H) = (\mathbf{curl}\,\boldsymbol{W}^E \mid \boldsymbol{V}^H).$$

It follows that $\boldsymbol{W}^E \times \boldsymbol{n}_{|\Gamma} = 0$ with the help of the integration-by-parts formula (3.5). So, $D((A^h)^*) \subset D(A^h)$ in both settings.
One can then prove that $D((A^h)^*)$ includes $D(A^h)$. To that aim, let $w \in D(A^h)$. Given $v \in D(A^h)$, we successively find, by integration by parts,

$$\begin{aligned}(w, A^h v)_{V^h} &= (\boldsymbol{W}^H \mid \mathbf{curl}\,\boldsymbol{V}^E) - (\boldsymbol{W}^E \mid \mathbf{curl}\,\boldsymbol{V}^H) \\ &= (\mathbf{curl}\,\boldsymbol{W}^H \mid \boldsymbol{V}^E) - (\mathbf{curl}\,\boldsymbol{W}^E \mid \boldsymbol{V}^H) \\ &= -(A^h w, v)_{V^h}. \end{aligned} \tag{5.27}$$

If Ω is the exterior of a body or a domain, we used the boundary conditions $\boldsymbol{V}^E \times \boldsymbol{n}_{|\Gamma} = 0$ and $\boldsymbol{W}^E \times \boldsymbol{n}_{|\Gamma} = 0$.
As $A^h w$ belongs to V^h, we have that the form $v \mapsto (w, A^h v)_{V^h}$ is continuous w.r.t. $\|\cdot\|_{V^h}$, so $w \in D((A^h)^*)$. We have thus proven that $D((A^h)^*) = D(A^h)$ and, according to (5.27) and the definition of $(A^h)^* w$, we conclude that A^h is skew-adjoint, since $(A^h)^* w = -A^h w$ for all $w \in D(A^h)$. ■

We determine below that the electromagnetic fields are uniquely defined.

Theorem 5.2.3 *Consider a homogeneous medium in $\Omega = \mathbb{R}^3$; or in an unbounded open subset $\Omega = \mathbb{R}^3 \setminus \overline{O}$ of $\mathbb{R}^3$ of category (C2), where O is a bounded, perfectly conducting body ; or in a domain $\Omega \subset \mathbb{R}^3$ encased in a perfect conductor.*

1. *Assume that*

$$\begin{cases} \boldsymbol{E}_0 \in \boldsymbol{H}_0(\mathbf{curl}, \Omega),\ \boldsymbol{H}_0 \in \boldsymbol{H}(\mathbf{curl}, \Omega) \\ \textit{either: } \boldsymbol{J} \in C^1(\mathbb{R}^+; \boldsymbol{L}^2(\Omega)), \\ \ \textit{or: } \boldsymbol{J} \in C^0(\mathbb{R}^+; \boldsymbol{L}^2(\Omega)) \cap L^1(\mathbb{R}^+; \boldsymbol{H}_0(\mathbf{curl}, \Omega)) \end{cases} ; \tag{5.28}$$

   thus, there exists one, and only one, couple of electromagnetic fields $(\boldsymbol{E}, \boldsymbol{H})$:

$$\begin{cases} (\boldsymbol{E}, \boldsymbol{E}') \in C^0(\mathbb{R}^+; \boldsymbol{H}_0(\mathbf{curl}, \Omega)) \times C^0(\mathbb{R}^+; \boldsymbol{L}^2(\Omega)) \\ (\boldsymbol{H}, \boldsymbol{H}') \in C^0(\mathbb{R}^+; \boldsymbol{H}(\mathbf{curl}, \Omega)) \times C^0(\mathbb{R}^+; \boldsymbol{L}^2(\Omega)) \end{cases}, \tag{5.29}$$

   which solves Eqs. (5.3-5.4) and (5.7), supplemented with the boundary condition (5.9) *if Ω is the exterior of a body or a domain.*
2. *Assume, in addition, that*

$$\begin{cases} \operatorname{div} \boldsymbol{E}_0 = \varrho(0),\ \operatorname{div} \boldsymbol{H}_0 = 0,\ \boldsymbol{H}_0 \cdot \boldsymbol{n}_{|\Gamma} = 0 \\ \varrho(0) \in H^{-1}(\Omega),\ \dfrac{\partial \varrho}{\partial t} + \operatorname{div} \boldsymbol{J} = 0, \quad t > 0 \end{cases};$$

   thus, there exists one, and only one, couple of electromagnetic fields $(\boldsymbol{E}, \boldsymbol{H})$:

$$\begin{cases} (\boldsymbol{E}, \boldsymbol{E}') \in C^0(\mathbb{R}^+; \boldsymbol{H}_0(\mathbf{curl}, \Omega)) \times C^0(\mathbb{R}^+; \boldsymbol{L}^2(\Omega)) \\ (\boldsymbol{H}, \boldsymbol{H}') \in C^0(\mathbb{R}^+; \boldsymbol{H}(\mathbf{curl}, \Omega) \cap \boldsymbol{H}_0(\operatorname{div}, \Omega)) \times C^0(\mathbb{R}^+; \boldsymbol{H}_0(\operatorname{div}, \Omega)) \end{cases},$$

   which solves the Maxwell's system of equations (5.3-5.7), supplemented with boundary conditions (5.8) *and* (5.9) *if Ω is the exterior of a body or a domain.*

In both instances, the electromagnetic fields depend continuously on the data.

Proof.

1. Due to Proposition 5.2.2, this is a straightforward application of Stone Theorem 4.3.6.
2. One simply uses the process described in Remark 5.1.2 to reach the conclusion.

■

5.2.2 In a perfect medium

We now consider $\Omega = \mathbb{R}^3$; or an unbounded open subset $\Omega = \mathbb{R}^3 \setminus \overline{O}$ of $\mathbb{R}^3$ of category (C2), where O is a bounded, perfectly conducting body ; or

a domain $\Omega \subset \mathbb{R}^3$ encased in a perfect conductor ; and that Ω is made of a perfect medium. Below, in the definitions, proofs and statements of results, we focus mainly on the differences with the previous subsection. We solve Maxwell's equations with permittivity $\mathbb{e}$ and permeability $\mathbb{\mu}$ such that (5.10) holds, with the minimal regularity of the electromagnetic fields, as in (5.2). To fit within the framework, as recalled at the beginning of §5.2, we reformulate Eqs. (5.3-5.4): we introduce the scaled unknowns $\widetilde{\boldsymbol{E}} = \mathbb{e}^{1/2}\boldsymbol{E}$ and $\widetilde{\boldsymbol{H}} = \mathbb{\mu}^{1/2}\boldsymbol{H}$, with initial data $\widetilde{\boldsymbol{E}}_0 = \mathbb{e}^{1/2}\boldsymbol{E}_0$ and $\widetilde{\boldsymbol{H}}_0 = \mathbb{\mu}^{1/2}\boldsymbol{H}_0$. Then, Eqs. (5.3-5.4) write

$$\begin{aligned}
\frac{\partial \widetilde{\boldsymbol{E}}}{\partial t} - \mathbb{e}^{-1/2}\,\mathbf{curl}\,\mathbb{\mu}^{-1/2}\widetilde{\boldsymbol{H}} &= -\mathbb{e}^{-1/2}\boldsymbol{J},\ t>0\\
\frac{\partial \widetilde{\boldsymbol{H}}}{\partial t} + \mathbb{\mu}^{-1/2}\,\mathbf{curl}\,\mathbb{e}^{-1/2}\widetilde{\boldsymbol{E}} &= 0, \qquad t>0.
\end{aligned}$$

Within the framework of first-order problems, we have, for the case of a perfect medium (we add a superscript ^{p}),

$$\begin{aligned}
u^p &= \begin{pmatrix} \widetilde{\boldsymbol{E}} \\ \widetilde{\boldsymbol{H}} \end{pmatrix},\ A^p = \begin{pmatrix} 0 & -\mathbb{e}^{-1/2}\,\mathbf{curl}\,\mathbb{\mu}^{-1/2} \\ \mathbb{\mu}^{-1/2}\,\mathbf{curl}\,\mathbb{e}^{-1/2} & 0 \end{pmatrix},\\
f^p &= \begin{pmatrix} -\mathbb{e}^{-1/2}\boldsymbol{J} \\ 0 \end{pmatrix},\ u_0^p = \begin{pmatrix} \widetilde{\boldsymbol{E}}_0 \\ \widetilde{\boldsymbol{H}}_0 \end{pmatrix}.
\end{aligned}$$

The operator A^p is an unbounded operator of $V^p = \boldsymbol{L}^2(\Omega) \times \boldsymbol{L}^2(\Omega)$, and we define its domain by

$$D(A^p) := \boldsymbol{H}_0(\mathbf{curl}\,\mathbb{e}^{-1/2}, \Omega) \times \boldsymbol{H}(\mathbf{curl}\,\mathbb{\mu}^{-1/2}, \Omega).$$

As $V^p = V^h$, the definitions of its scalar product and its norm are clear (for the notations, use those of §5.2.1 and replace ^{h} with ^{p}).

Proposition 5.2.4 *The operator A^p is closed and skew-adjoint.*

Proof. First, one proves easily that A^p is closed.
Second, we find that $D(A^p)$ is dense in V^p, because $\mathbb{e}^{1/2}\boldsymbol{D}(\Omega) \times \mathbb{\mu}^{1/2}\boldsymbol{D}(\Omega)$ is a subset of $D(A^p)$. Then, one can build the adjoint of A^p: $w \in V^p$ belongs to the domain $D((A^p)^*)$ if the form $v \mapsto (w, A^p v)_{V^p}$ defined on $D(A^p)$ is continuous, with respect to $\|\cdot\|_{V^p}$, and one has $((A^p)^* w, v)_{V^p} = (w, A^p v)_{V^p}$ for all $v \in D(A^p)$ in this case.
If one chooses $v \in \mathbb{e}^{1/2}\boldsymbol{D}(\Omega) \times \mathbb{\mu}^{1/2}\boldsymbol{D}(\Omega)$, one obtains

$$\begin{aligned}
(w, A^p v)_{V^p} &= -(\boldsymbol{W}^E \mid \mathbb{e}^{-1/2}\,\mathbf{curl}\,\mathbb{\mu}^{-1/2}\boldsymbol{V}^H) + (\boldsymbol{W}^H \mid \mathbb{\mu}^{-1/2}\,\mathbf{curl}\,\mathbb{e}^{-1/2}\boldsymbol{V}^E)\\
&= -\langle \mathbf{curl}\,\mathbb{e}^{-1/2}\boldsymbol{W}^E, \mathbb{\mu}^{-1/2}\overline{\boldsymbol{V}^H}\rangle + \langle \mathbf{curl}\,\mathbb{\mu}^{-1/2}\boldsymbol{W}^H, \mathbb{e}^{-1/2}\overline{\boldsymbol{V}^E}\rangle.
\end{aligned}$$

For the form to be continuous w.r.t. $\|\cdot\|_{V^p}$, $(\boldsymbol{W}^E, \boldsymbol{W}^H)$ must belong to $\boldsymbol{H}(\mathbf{curl}\,\mathbb{e}^{-1/2}, \Omega) \times \boldsymbol{H}(\mathbf{curl}\,\mathbb{\mu}^{-1/2}, \Omega)$. Furthermore, by identification,

$\forall v \in D(A^p)$,
$(w, A^p v)_{V^p} = -(\mathbb{\mu}^{-1/2}\,\mathbf{curl}\,\mathbb{\varepsilon}^{-1/2}\boldsymbol{W}^E \mid \boldsymbol{V}^H) + (\mathbb{\varepsilon}^{-1/2}\,\mathbf{curl}\,\mathbb{\mu}^{-1/2}\boldsymbol{W}^H \mid \boldsymbol{V}^E)$.

If $\Omega = \mathbb{R}^3$, recall that $\boldsymbol{H}_0(\mathbf{curl}\,\mathbb{\varepsilon}^{-1/2}, \mathbb{R}^3) = \boldsymbol{H}(\mathbf{curl}\,\mathbb{\varepsilon}^{-1/2}, \mathbb{R}^3)$. If Ω is the exterior of a body or a domain, we obtain that $\mathbb{\varepsilon}^{-1/2}\boldsymbol{W}^E \times \boldsymbol{n}_{|\Gamma} = 0$ by integrating by parts, so $\boldsymbol{W}^E$ belongs to $\boldsymbol{H}_0(\mathbf{curl}\,\mathbb{\varepsilon}^{-1/2}, \Omega)$. $D((A^p)^*) \subset D(A^p)$ in both settings.
As in the proof of Proposition 5.2.2, using integration by parts twice more, one finds that $D((A^p)^*)$ includes $D(A^p)$, and the fact that A^p is skew-adjoint follows. ■

With the help of the Stone Theorem, we infer that the fields $(\widetilde{\boldsymbol{E}}, \widetilde{\boldsymbol{H}})$ exist and are uniquely defined. Hence, the results carry over to the actual electromagnetic fields $(\boldsymbol{E}, \boldsymbol{H})$.

Theorem 5.2.5 *Consider a perfect medium in $\Omega = \mathbb{R}^3$; or in an unbounded open subset $\Omega = \mathbb{R}^3 \backslash \overline{O}$ of $\mathbb{R}^3$ of category (C2), where O is a bounded, perfectly conducting body; or in a domain $\Omega \subset \mathbb{R}^3$ encased in a perfect conductor, with tensor fields $\mathbb{\varepsilon}$ and $\mathbb{\mu}$ that fulfill assumption (5.10).*

1. *Assume that the conditions (5.28) are met for the data $(\boldsymbol{E}_0, \boldsymbol{H}_0, \boldsymbol{J})$. Then, there exists one, and only one, couple of electromagnetic fields $(\boldsymbol{E}, \boldsymbol{H})$ governed by Eqs. (5.3-5.4) and (5.7), supplemented with the boundary condition* (5.9) *if Ω is the exterior of a body or a domain, with regularity (5.29).*
2. *Assume, in addition, that*

$$\begin{cases} \operatorname{div} \mathbb{\varepsilon}\boldsymbol{E}_0 = \varrho(0),\ \operatorname{div} \mathbb{\mu}\boldsymbol{H}_0 = 0,\ \mathbb{\mu}\boldsymbol{H}_0 \cdot \boldsymbol{n}_{|\Gamma} = 0 \\ \varrho(0) \in H^{-1}(\Omega),\ \dfrac{\partial \varrho}{\partial t} + \operatorname{div} \boldsymbol{J} = 0, \quad t > 0 \end{cases};$$

thus, there exists one, and only one, couple of electromagnetic fields $(\boldsymbol{E}, \boldsymbol{H})$:

$$\begin{cases} (\boldsymbol{E}, \boldsymbol{E}') \in C^0(\mathbb{R}^+; \boldsymbol{H}_0(\mathbf{curl}, \Omega)) \times C^0(\mathbb{R}^+; \boldsymbol{L}^2(\Omega)) \\ (\boldsymbol{H}, \boldsymbol{H}') \in C^0(\mathbb{R}^+; \boldsymbol{H}(\mathbf{curl}, \Omega) \cap \boldsymbol{H}_0(\operatorname{div} \mathbb{\mu}, \Omega)) \times C^0(\mathbb{R}^+; \boldsymbol{H}_0(\operatorname{div} \mathbb{\mu}, \Omega)) \end{cases},$$

which solves the Maxwell's system of equations (5.3-5.7), supplemented with boundary conditions (5.8) *and* (5.9) *if Ω is the exterior of a body or a domain.*

In both instances, the electromagnetic fields depend continuously on the data.

5.2.3 In a dispersive medium

Let us briefly consider a dispersive medium in $\Omega = \mathbb{R}^3$; or in an unbounded open subset $\Omega = \mathbb{R}^3 \backslash \overline{O}$ of $\mathbb{R}^3$ of category (C2), where O is a bounded, perfectly conducting body; or in a domain $\Omega \subset \mathbb{R}^3$ encased in a perfect conductor. The

dispersive medium is governed by the Lorentz model (see Eqs. (5.14-5.18)), plus initial conditions

$$\left(\boldsymbol{E}, \boldsymbol{H}, \boldsymbol{P}, \frac{\partial \boldsymbol{P}}{\partial t}, \boldsymbol{M}, \frac{\partial \boldsymbol{M}}{\partial t}\right)(0) = (\boldsymbol{E}_0, \boldsymbol{H}_0, \boldsymbol{P}_0, \boldsymbol{p}_0, \boldsymbol{M}_0, \boldsymbol{m}_0). \tag{5.30}$$

For ease of exposition, we set all parameters to 1: $\varepsilon_0 = \mu_0 = \alpha_e = \beta_e = \alpha_m = \beta_m = 1$. In this case, one introduces the auxiliary variables $\boldsymbol{p} = \boldsymbol{P}'$, respectively $\boldsymbol{m} = \boldsymbol{M}'$ to produce a first-order time-dependent problem. One defines

$$u^d = \begin{pmatrix} \boldsymbol{E} \\ \boldsymbol{H} \\ \boldsymbol{P} \\ \boldsymbol{p} \\ \boldsymbol{M} \\ \boldsymbol{m} \end{pmatrix}, \quad A^d = \begin{pmatrix} 0 & -\mathbf{curl} & 0 & 1 & 0 & 0 \\ \mathbf{curl} & 0 & 0 & 0 & 0 & 1 \\ 0 & 0 & 0 & -1 & 0 & 0 \\ -1 & 0 & 1 & 0 & 0 & 0 \\ 0 & 0 & 0 & 0 & 0 & -1 \\ 0 & -1 & 0 & 0 & 1 & 0 \end{pmatrix}, \quad f^d = \begin{pmatrix} -\boldsymbol{J} \\ 0 \\ 0 \\ 0 \\ 0 \\ 0 \end{pmatrix}.$$

The initial data (cf. (5.30)) is called u_0^d. The operator A^d is an unbounded operator of $V^h = (\boldsymbol{L}^2(\Omega))^6$, whose domain is chosen as $D(A^d) := \boldsymbol{H}_0(\mathbf{curl}, \Omega) \times \boldsymbol{H}(\mathbf{curl}, \Omega) \times (\boldsymbol{L}^2(\Omega))^4$. Similarly to §5.2.1, one proves the result below.

Proposition 5.2.6 *The operator A^d is closed and skew-adjoint.*

The conclusions can then be stated.

Theorem 5.2.7 *Consider a dispersive medium governed by the Lorentz model in $\Omega = \mathbb{R}^3$; or in an unbounded open subset $\Omega = \mathbb{R}^3 \setminus \overline{O}$ of $\mathbb{R}^3$ of category (C2), where O is a bounded, perfectly conducting body ; or in a domain $\Omega \subset \mathbb{R}^3$ encased in a perfect conductor.*

1. *Assume that*

$$\begin{cases} \boldsymbol{E}_0 \in \boldsymbol{H}_0(\mathbf{curl}, \Omega), \ \boldsymbol{H}_0 \in \boldsymbol{H}(\mathbf{curl}, \Omega), \\ \boldsymbol{P}_0, \boldsymbol{p}_0, \boldsymbol{M}_0, \boldsymbol{m}_0 \in \boldsymbol{L}^2(\Omega) \\ \textit{either: } \boldsymbol{J} \in C^1(\mathbb{R}^+; \boldsymbol{L}^2(\Omega)), \\ \ \textit{or: } \boldsymbol{J} \in C^0(\mathbb{R}^+; \boldsymbol{L}^2(\Omega)) \cap L^1(\mathbb{R}^+; \boldsymbol{H}_0(\mathbf{curl}, \Omega)) \end{cases};$$

thus, there exists one, and only one, quadruple of electromagnetic fields $(\boldsymbol{E}, \boldsymbol{H}, \boldsymbol{P}, \boldsymbol{M})$:

$$\begin{cases} (\boldsymbol{E}, \boldsymbol{E}') \in C^0(\mathbb{R}^+; \boldsymbol{H}_0(\mathbf{curl}, \Omega)) \times C^0(\mathbb{R}^+; \boldsymbol{L}^2(\Omega)) \\ (\boldsymbol{H}, \boldsymbol{H}') \in C^0(\mathbb{R}^+; \boldsymbol{H}(\mathbf{curl}, \Omega)) \times C^0(\mathbb{R}^+; \boldsymbol{L}^2(\Omega)) \\ \boldsymbol{P}, \boldsymbol{P}', \boldsymbol{M}, \boldsymbol{M}' \in C^0(\mathbb{R}^+; \boldsymbol{L}^2(\Omega)) \end{cases},$$

which solves Eqs. (5.14-5.16) and (5.30), supplemented with the boundary condition (5.9) *if Ω is the exterior of a body or a domain.*

2. *Assume, in addition, that*

$$\begin{cases} \operatorname{div}(\boldsymbol{E}_0 + \boldsymbol{P}_0) = \varrho(0),\ \operatorname{div}(\boldsymbol{H}_0 + \boldsymbol{M}_0) = 0,\ (\boldsymbol{H}_0 + \boldsymbol{M}_0) \cdot \boldsymbol{n}_{|\Gamma} = 0 \\ \varrho(0) \in H^{-1}(\Omega),\ \dfrac{\partial \varrho}{\partial t} + \operatorname{div} \boldsymbol{J} = 0, \quad t > 0 \end{cases};$$

thus, the quadruple $(\boldsymbol{E}, \boldsymbol{H}, \boldsymbol{P}, \boldsymbol{M})$ *also solves Eqs. (5.17-5.18) and the boundary condition* $(\boldsymbol{H} + \boldsymbol{M}) \cdot \boldsymbol{n}_{|\Gamma} = 0$ *if* Ω *is the exterior of a body or a domain.*

The electromagnetic fields depend continuously on the data.

5.2.4 Truncated exterior problem

We consider an exterior problem, around a perfectly conducting object. As we did before, we define a truncated exterior problem, set in a computational domain whose boundary is equal to $\Gamma = \Gamma_P \cup \Gamma_A$, with $\Gamma_P \cap \Gamma_A = \emptyset$. On the physical part of the boundary, Γ_P, one imposes a perfect conductor boundary condition, whereas on the smooth artificial boundary, one imposes an ABC. The aim is to solve Maxwell's equations in a perfect medium with the same assumptions as in §5.2.2. In addition, we also assume that the medium is homogeneous in a neighborhood of the artificial boundary Γ_A, so the condition there writes as in (5.20). Below, we begin with the case of a homogeneous ABC ($\boldsymbol{g}^\star = 0$), and then we proceed to the general case ($\boldsymbol{g}^\star \neq 0$).

Homogeneous absorbing boundary condition

We scale the unknowns, as in §5.2.2: $\widetilde{\boldsymbol{E}} = \mathbb{e}^{1/2}\boldsymbol{E}$ and $\widetilde{\boldsymbol{H}} = \mathbb{\mu}^{1/2}\boldsymbol{H}$. The homogeneous ABC then writes

$$\widetilde{\boldsymbol{E}}(t) \times \boldsymbol{n} + \widetilde{\boldsymbol{H}}_\top(t) = 0 \text{ on } \Gamma_A.$$

To fit within the framework of first-order problems, we introduce (with a superscript ^{e})

$$u^e = \begin{pmatrix} \widetilde{\boldsymbol{E}} \\ \widetilde{\boldsymbol{H}} \end{pmatrix},\ A^e = \begin{pmatrix} 0 & -\mathbb{e}^{-1/2}\,\mathbf{curl}\,\mathbb{\mu}^{-1/2} \\ \mathbb{\mu}^{-1/2}\,\mathbf{curl}\,\mathbb{e}^{-1/2} & 0 \end{pmatrix},$$
$$f^e = \begin{pmatrix} -\mathbb{e}^{-1/2}\boldsymbol{J} \\ 0 \end{pmatrix},\ u_0^e = \begin{pmatrix} \widetilde{\boldsymbol{E}}_0 \\ \widetilde{\boldsymbol{H}}_0 \end{pmatrix}.$$

The operator A^e is an unbounded operator of $V^e = \boldsymbol{L}^2(\Omega) \times \boldsymbol{L}^2(\Omega)$, and we define its domain by

$$D(A^e) := \{(\boldsymbol{V}^E, \boldsymbol{V}^H) \in \boldsymbol{H}_{0,\Gamma_P}(\mathbf{curl}\,\mathbb{e}^{-1/2}, \Omega) \times \boldsymbol{H}(\mathbf{curl}\,\mathbb{\mu}^{-1/2}, \Omega)\ : \\ (\boldsymbol{V}^E \times \boldsymbol{n} + (\boldsymbol{V}^H)_\top)_{|\Gamma_A} = 0\}.$$

As $V^e = V^h$, we use the definitions and notations of §5.2.1 (replace ^{h} with ^{e}) for its scalar product and norm.

Proposition 5.2.8 *The operator A^e is maximal monotone.*

Remark 5.2.9 *As we will see below, the operator A^e is not skew-adjoint.*

Proof. We apply Proposition 4.1.15 to obtain the result: we need to prove that the operator A^e is closed, with a dense domain in V^e, and that both A^e and its adjoint are monotone.
As before, one can easily check that A^e is closed, with a dense domain in V^e. Second, one proves that A^e is monotone. For that, given $v \in D(A^e)$, one computes $(A^e v, v)_{V^e}$ with the help of the integration-by-parts formula (3.5):

$$\begin{aligned}(A^e v, v)_{V^e} &= -(\mathbb{e}^{-1/2}\,\mathbf{curl}\,\mathbb{\mu}^{-1/2}\boldsymbol{V}^H \mid \boldsymbol{V}^E) + (\mathbb{\mu}^{-1/2}\,\mathbf{curl}\,\mathbb{e}^{-1/2}\boldsymbol{V}^E \mid \boldsymbol{V}^H)\\ &= -(\mathbf{curl}\,\mathbb{\mu}^{-1/2}\boldsymbol{V}^H \mid \mathbb{e}^{-1/2}\boldsymbol{V}^E) + (\mathbf{curl}\,\mathbb{e}^{-1/2}\boldsymbol{V}^E \mid \mathbb{\mu}^{-1/2}\boldsymbol{V}^H)\\ &= -{}_{\gamma_A}\langle \mathbb{e}^{-1/2}\boldsymbol{V}^E \times \boldsymbol{n}, \mathbb{\mu}^{-1/2}(\boldsymbol{V}^H)_\top\rangle_{\pi_A}\\ &= -(\varepsilon\mu)^{-1/2}{}_{\gamma_A}\langle \boldsymbol{V}^E \times \boldsymbol{n}, (\boldsymbol{V}^H)_\top\rangle_{\pi_A}.\end{aligned}$$

Now, we recall that $\boldsymbol{V}^E \times \boldsymbol{n} + (\boldsymbol{V}^H)_\top = 0$ on Γ_A. Also, because the artificial boundary is smooth, we know that both $(\boldsymbol{V}^E \times \boldsymbol{n})_{|\Gamma_A}$ and $((\boldsymbol{V}^H)_\top)_{|\Gamma_A}$ belong to $\boldsymbol{L}^2_t(\Gamma_A)$ (this is summarized in Remark 5.1.5). We then conclude that $(A^e v, v)_{V^e} \geq 0$, which yields the monotonicity of the operator A^e.
Lastly, one has to prove that the adjoint $(A^e)^*$ of A^e is monotone. To proceed, let us build $(A^e)^*$ and, in particular, its domain: $w \in V^e$ belongs to the domain $D((A^e)^*)$ if the form $v \mapsto (w, A^e v)_{V^e}$ defined on $D(A^e)$ is continuous, with respect to the norm $\|\cdot\|_{V^e}$. Choosing first $v \in \mathbb{e}^{1/2}\boldsymbol{D}(\Omega) \times \mathbb{\mu}^{1/2}\boldsymbol{D}(\Omega)$, one obtains, as in the proof of Proposition 5.2.4, that w belongs to $\boldsymbol{H}(\mathbf{curl}\,\mathbb{e}^{-1/2}, \Omega) \times \boldsymbol{H}(\mathbf{curl}\,\mathbb{\mu}^{-1/2}, \Omega)$, and moreover, by identification, that

$$\begin{aligned}&\forall v \in D(A^e),\\ &(w, A^e v)_{V^e} = -(\mathbb{\mu}^{-1/2}\,\mathbf{curl}\,\mathbb{e}^{-1/2}\boldsymbol{W}^E \mid \boldsymbol{V}^H) + (\mathbb{e}^{-1/2}\,\mathbf{curl}\,\mathbb{\mu}^{-1/2}\boldsymbol{W}^H \mid \boldsymbol{V}^E).\end{aligned}$$

Expanding the expression of $(w, A^e v)_{V^e}$ as above, and choosing $v \in \boldsymbol{H}_0(\mathbf{curl}\,\mathbb{e}^{-1/2}, \Omega) \times \boldsymbol{H}_{0,\Gamma_A}(\mathbf{curl}\,\mathbb{\mu}^{-1/2}, \Omega)$, one finds, after integration by parts, a term on the physical part Γ_P of the boundary

$$0 = {}_{\gamma_P}\langle \mathbb{e}^{-1/2}\boldsymbol{W}^E \times \boldsymbol{n}, \mathbb{\mu}^{-1/2}(\boldsymbol{V}^H)_\top\rangle_{\pi_P},$$

and it follows that $(\mathbb{e}^{-1/2}\boldsymbol{W}^E \times \boldsymbol{n})_{|\Gamma_P} = 0$, thanks to the surjectivity result of Corollary 3.1.23.
Last, we choose any $v \in D(A^e)$ and again perform an integration by parts: this time, terms on the artificial part Γ_A of the boundary appear, namely

$$\begin{aligned}0 &= {}_{\gamma_A}\langle \mathbb{e}^{-1/2}\boldsymbol{W}^E \times \boldsymbol{n}, \mathbb{\mu}^{-1/2}(\boldsymbol{V}^H)_\top\rangle_{\pi_A} + {}_{\gamma_A}\langle \mathbb{e}^{-1/2}\overline{\boldsymbol{V}^E} \times \boldsymbol{n}, \mathbb{\mu}^{-1/2}(\overline{\boldsymbol{W}^H})_\top\rangle_{\pi_A}\\ &= (\varepsilon\mu)^{-1/2}\left({}_{\gamma_A}\langle \boldsymbol{W}^E \times \boldsymbol{n}, (\boldsymbol{V}^H)_\top\rangle_{\pi_A} + {}_{\gamma_A}\langle \overline{\boldsymbol{V}^E} \times \boldsymbol{n}, (\overline{\boldsymbol{W}^H})_\top\rangle_{\pi_A}\right).\end{aligned}$$

Now, let $\boldsymbol{\lambda} \in \boldsymbol{C}^\infty(\Gamma_A) \cap \boldsymbol{L}^2_t(\Gamma_A)$. As the artificial boundary Γ_A is smooth, we have that $\boldsymbol{\lambda} \in \boldsymbol{H}^{-1/2}_\parallel(\mathrm{div}_\Gamma, \Gamma_A) \cap \boldsymbol{H}^{-1/2}_\perp(\mathrm{curl}_\Gamma, \Gamma_A)$. According to Corollary 3.1.23, there exists $(\boldsymbol{V}^E, \boldsymbol{V}^H) \in D(A^e)$ such that $\overline{\boldsymbol{\lambda}} = (\boldsymbol{V}^E \times \boldsymbol{n})_{|\Gamma_A} =$

$-((\boldsymbol{V}^H)_\top)_{|\Gamma_A}$.
The above equality leads to

$$0 = -_{\gamma_A}\langle \boldsymbol{W}^E \times \boldsymbol{n}, \overline{\boldsymbol{\lambda}}\rangle_{\pi_A} + {}_{\gamma_A}\langle \boldsymbol{\lambda}, (\overline{\boldsymbol{W}^H})_\top\rangle_{\pi_A}.$$

Notice that Γ_A is a closed set, so $\boldsymbol{C}_c^\infty(\Gamma_A) = \boldsymbol{C}^\infty(\Gamma_A)$, and one finds that

$$\forall \boldsymbol{\lambda} \in \boldsymbol{D}(\Gamma_A) \cap \boldsymbol{L}_t^2(\Gamma_A),\ \langle -\boldsymbol{W}^E \times \boldsymbol{n} + (\boldsymbol{W}^H)_\top, \boldsymbol{\lambda}\rangle_{\boldsymbol{D}(\Gamma_A)\cap \boldsymbol{L}_t^2(\Gamma_A)} = 0.$$

This yields

$$-\boldsymbol{W}^E \times \boldsymbol{n} + (\boldsymbol{W}^H)_\top = 0 \text{ on } \Gamma_A,$$

in the sense of (tangential) distributions on Γ_A. In other words, we have

$$D((A^e)^*) \subset \{(\boldsymbol{W}^E, \boldsymbol{W}^H) \in \boldsymbol{H}_{0,\Gamma_P}(\mathbf{curl}\,\mathbb{e}^{-1/2}, \Omega) \times \boldsymbol{H}(\mathbf{curl}\,\mathbb{\mu}^{-1/2}, \Omega)\ :\ (-\boldsymbol{W}^E \times \boldsymbol{n} + (\boldsymbol{W}^H)_\top)_{|\Gamma_A} = 0\}.$$

Reciprocally, let $w \in \boldsymbol{H}_{0,\Gamma_P}(\mathbf{curl}\,\mathbb{e}^{-1/2}, \Omega) \times \boldsymbol{H}(\mathbf{curl}\,\mathbb{\mu}^{-1/2}, \Omega)$ such that $(-\boldsymbol{W}^E \times \boldsymbol{n} + (\boldsymbol{W}^H)_\top)_{|\Gamma_A} = 0$. Given $v \in D(A^e)$, let us evaluate $(w, A^e v)_{V^e}$. Recall that, according to Remark 5.1.5, $(\boldsymbol{V}^E \times \boldsymbol{n})_{|\Gamma_A}$, $((\boldsymbol{V}^H)_\top)_{|\Gamma_A}$, $(\boldsymbol{W}^E \times \boldsymbol{n})_{|\Gamma_A}$ and $((\boldsymbol{W}^H)_\top)_{|\Gamma_A}$ all belong to $\boldsymbol{L}_t^2(\Gamma_A)$. One finds, after integrating by parts,

$$\begin{aligned}
(w, A^e v)_{V^e} &= -(\boldsymbol{W}^E \mid \mathbb{e}^{-1/2}\,\mathbf{curl}\,\mathbb{\mu}^{-1/2}\boldsymbol{V}^H) + (\boldsymbol{W}^H \mid \mathbb{\mu}^{-1/2}\,\mathbf{curl}\,\mathbb{e}^{-1/2}\boldsymbol{V}^E)\\
&= -(\mathbb{\mu}^{-1/2}\,\mathbf{curl}\,\mathbb{e}^{-1/2}\boldsymbol{W}^E \mid \boldsymbol{V}^H) + (\mathbb{e}^{-1/2}\,\mathbf{curl}\,\mathbb{\mu}^{-1/2}\boldsymbol{W}^H \mid \boldsymbol{V}^E)\\
&\quad -_{\gamma_A}\langle \mathbb{e}^{-1/2}\boldsymbol{W}^E \times \boldsymbol{n}, \mathbb{\mu}^{-1/2}(\boldsymbol{V}^H)_\top\rangle_{\pi_A} + {}_{\gamma_A}\langle \mathbb{\mu}^{-1/2}\boldsymbol{W}^H \times \boldsymbol{n}, \mathbb{e}^{-1/2}(\boldsymbol{V}^E)_\top\rangle_{\pi_A}\\
&= -(\mathbb{\mu}^{-1/2}\,\mathbf{curl}\,\mathbb{e}^{-1/2}\boldsymbol{W}^E \mid \boldsymbol{V}^H) + (\mathbb{e}^{-1/2}\,\mathbf{curl}\,\mathbb{\mu}^{-1/2}\boldsymbol{W}^H \mid \boldsymbol{V}^E)\\
&\quad + (\varepsilon\mu)^{-1/2}\int_{\Gamma_A}\left(-\boldsymbol{W}^E \times \boldsymbol{n}\cdot(\overline{\boldsymbol{V}^H})_\top + \boldsymbol{W}^H \times \boldsymbol{n}\cdot(\overline{\boldsymbol{V}^E})_\top\right)\,d\Gamma.
\end{aligned}$$

However, one easily checks that the boundary integral vanishes, because $(-\boldsymbol{W}^E \times \boldsymbol{n}\cdot(\overline{\boldsymbol{V}^H})_\top + \boldsymbol{W}^H \times \boldsymbol{n}\cdot(\overline{\boldsymbol{V}^E})_\top) = 0$ almost everywhere on Γ_A. Hence, one concludes that $w \in D((A^e)^*)$, so

$$(A^e)^* = \begin{pmatrix} 0 & \mathbb{e}^{-1/2}\,\mathbf{curl}\,\mathbb{\mu}^{-1/2} \\ -\mathbb{\mu}^{-1/2}\,\mathbf{curl}\,\mathbb{e}^{-1/2} & 0 \end{pmatrix},$$

with domain

$$D((A^e)^*) = \{(\boldsymbol{W}^E, \boldsymbol{W}^H) \in \boldsymbol{H}_{0,\Gamma_P}(\mathbf{curl}\,\mathbb{e}^{-1/2}, \Omega) \times \boldsymbol{H}(\mathbf{curl}\,\mathbb{\mu}^{-1/2}, \Omega)\ :\ (-\boldsymbol{W}^E \times \boldsymbol{n} + (\boldsymbol{W}^H)_\top)_{|\Gamma_A} = 0\}.$$

Finally, let us check that $(A^e)^*$ is monotone. Given $w \in D((A^e)^*)$, one finds, as usual, after integration by parts (cf. Remark 5.1.5),

$$\begin{aligned}
((A^e)^* w, w)_{V^e} &= (\mathbb{e}^{-1/2}\,\mathbf{curl}\,\mathbb{\mu}^{-1/2}\boldsymbol{W}^H \mid \boldsymbol{W}^E) - (\mathbb{\mu}^{-1/2}\,\mathbf{curl}\,\mathbb{e}^{-1/2}\boldsymbol{W}^E \mid \boldsymbol{W}^H)\\
&= {}_{\gamma_A}\langle \mathbb{e}^{-1/2}\boldsymbol{W}^E \times \boldsymbol{n}, \mathbb{\mu}^{-1/2}(\boldsymbol{W}^H)_\top\rangle_{\pi_A} \geq 0.
\end{aligned}$$

This ends the proof. ■

With the help of the Hille-Yosida Theorem 4.3.2, it is then possible to conclude that the fields $(\widetilde{\boldsymbol{E}}, \widetilde{\boldsymbol{H}})$ exist and are uniquely defined in the case of the homogeneous ABC. This carries over to the actual electromagnetic fields $(\boldsymbol{E}, \boldsymbol{H})$. The precise statement of the results will be included in Theorem 5.2.12 hereafter.

General absorbing boundary condition

Here, the ABC writes (5.20), with $\boldsymbol{g}^\star \neq 0$. Obviously, the data $\boldsymbol{g}^\star$ needs to fulfill the *a priori* regularity assumption

$$\boldsymbol{g}^\star(t) \in \boldsymbol{H}_\parallel^{-1/2}(\mathrm{div}_\Gamma, \Gamma_A) + \boldsymbol{H}_\perp^{-1/2}(\mathrm{curl}_\Gamma, \Gamma_A),\ t > 0.$$

Lemma 5.2.10 *It holds, algebraically and topologically, that*

$$\boldsymbol{H}_\parallel^{-1/2}(\mathrm{div}_\Gamma, \Gamma_A) + \boldsymbol{H}_\perp^{-1/2}(\mathrm{curl}_\Gamma, \Gamma_A) = \mathbf{curl}_\Gamma(H^{1/2}_{zmv}(\Gamma_A)) + \mathbf{grad}_\Gamma(H^{1/2}_{zmv}(\Gamma_A)),$$
$$\mathbf{curl}_\Gamma(H^{1/2}_{zmv}(\Gamma_A)) \subset \boldsymbol{H}_\parallel^{-1/2}(\mathrm{div}_\Gamma, \Gamma_A),\ \mathbf{grad}_\Gamma(H^{1/2}_{zmv}(\Gamma_A)) \subset \boldsymbol{H}_\perp^{-1/2}(\mathrm{curl}_\Gamma, \Gamma_A).$$

Proof. Given $\mathbf{v} \in \boldsymbol{H}_\parallel^{-1/2}(\mathrm{div}_\Gamma, \Gamma_A) + \boldsymbol{H}_\perp^{-1/2}(\mathrm{curl}_\Gamma, \Gamma_A)$, one can write on Γ_A (cf. Theorem 3.1.22)

$$\mathbf{v} = \mathbf{curl}_\Gamma(\phi^- + \phi^+) + \mathbf{grad}_\Gamma(\psi^- + \psi^+),$$

with $\phi^-, \psi^- \in H^{1/2}_{zmv}(\Gamma_A)$, and $\phi^+, \psi^+ \in \mathcal{H}(\Gamma_A)$. As $\mathcal{H}(\Gamma_A) \subset H^{1/2}_{zmv}(\Gamma_A)$, it follows that $\mathbf{v} \in \mathbf{curl}_\Gamma(H^{1/2}_{zmv}(\Gamma_A)) + \mathbf{grad}_\Gamma(H^{1/2}_{zmv}(\Gamma_A))$.
Obviously, one has $\mathbf{curl}_\Gamma(H^{1/2}_{zmv}(\Gamma_A)) \subset \boldsymbol{H}_\parallel^{-1/2}(\mathrm{div}_\Gamma, \Gamma_A)$ and $\mathbf{grad}_\Gamma(H^{1/2}_{zmv}(\Gamma_A)) \subset \boldsymbol{H}_\perp^{-1/2}(\mathrm{curl}_\Gamma, \Gamma_A)$, so the converse imbeddings follow. ■

Due to the result of Lemma 5.2.10, one makes the assumption (for some *ad hoc* $m \geq 0$), that

$$\begin{cases} \boldsymbol{g}^\star(t) = \mathbf{curl}_\Gamma\, \phi(t) + \mathbf{grad}_\Gamma(\psi(t)),\ \text{on } \Gamma_A,\ t > 0 \\ \text{with } \phi, \psi \in C^m(\mathbb{R}^+, H^{1/2}_{zmv}(\Gamma_A)) \end{cases}.$$

Remark 5.2.11 *Notice first that the above lemma holds even when the boundary is only piecewise smooth.*
Second, notice that, provided Γ_A is a smooth (closed) boundary, one can characterize the (non-direct) sum $\mathbf{curl}_\Gamma(H^{1/2}_{zmv}(\Gamma_A)) + \mathbf{grad}_\Gamma(H^{1/2}_{zmv}(\Gamma_A))$. Indeed, given a domain $\omega \subset \mathbb{R}^2$, one has (see Proposition 3.1.11)

$$\boldsymbol{L}^2(\omega) = \mathbf{curl}_\Gamma(H^1(\omega)) \overset{\perp}{\oplus} \mathbf{grad}_\Gamma(H^1_0(\omega)).$$

One also has the continuous, albeit non-direct, decomposition (see [79])

$$\boldsymbol{H}^{-1}(\omega) = \mathbf{curl}_\Gamma(L^2(\omega)) + \mathbf{grad}_\Gamma(L^2(\omega)).$$

By interpolation (cf. Proposition 2.1.44), one derives the result

$$\boldsymbol{H}^{-1/2}(\omega) = \mathbf{curl}_\Gamma(H^{1/2}(\omega)) + \mathbf{grad}_\Gamma(\widetilde{H}^{1/2}(\omega)).$$

Constants can be removed from the potentials. On a smooth, closed manifold, such as the artificial boundary Γ_A, one thus infers the non-direct decomposition of the space of tangential fields $\boldsymbol{H}_t^{-1/2}(\Gamma_A)$:

$$\boldsymbol{H}_t^{-1/2}(\Gamma_A) = \mathbf{curl}_\Gamma(H^{1/2}_{zmv}(\Gamma_A)) + \mathbf{grad}_\Gamma(H^{1/2}_{zmv}(\Gamma_A)).$$

Then, according to the surjectivity results of the trace mappings (Corollary 3.1.23), we know that there exists $(\boldsymbol{E}^\star, \boldsymbol{H}^\star) \in \boldsymbol{H}_{0,\Gamma_P}(\mathbf{curl}, \Omega) \times \boldsymbol{H}(\mathbf{curl}, \Omega)$ such that

$$\boldsymbol{E}^\star(t) \times \boldsymbol{n} + \sqrt{\frac{\mu}{\varepsilon}}\boldsymbol{H}^\star_\top(t) = \boldsymbol{g}^\star(t) \text{ on } \Gamma_A,\ t > 0, \tag{5.31}$$

with continuous dependence of $(\boldsymbol{E}^\star, \boldsymbol{H}^\star)$ with respect to (ϕ, ψ). In this way, one can introduce the auxiliary unknowns $(\boldsymbol{E}^-, \boldsymbol{H}^-) = (\boldsymbol{E} - \boldsymbol{E}^\star, \boldsymbol{H} - \boldsymbol{H}^\star)$, together with the auxiliary data $\boldsymbol{J}^- = \mathbb{e}\partial_t \boldsymbol{E}^\star - \mathbf{curl}\,\boldsymbol{H}^\star$ and $\boldsymbol{K}^- = \mathbb{m}\partial_t \boldsymbol{H}^\star + \mathbf{curl}\,\boldsymbol{E}^\star$. The auxiliary unknowns are then governed by

$$\mathbb{e}\frac{\partial \boldsymbol{E}^-}{\partial t} - \mathbf{curl}\,\boldsymbol{H}^- = -\boldsymbol{J} - \boldsymbol{J}^-, \qquad t > 0 \tag{5.32}$$

$$\mathbb{m}\frac{\partial \boldsymbol{H}^-}{\partial t} + \mathbf{curl}\,\boldsymbol{E}^- = -\boldsymbol{K}^-, \qquad t > 0, \tag{5.33}$$

$$(\boldsymbol{E}^-, \boldsymbol{H}^-)(0) = (\boldsymbol{E}_0 - \boldsymbol{E}^\star(0), \boldsymbol{H}_0 - \boldsymbol{H}^\star(0)), \tag{5.34}$$

and, by construction, the scaled auxiliary unknowns $(\mathbb{e}^{1/2}\boldsymbol{E}^-, \mathbb{m}^{1/2}\boldsymbol{H}^-)(t)$ belong to $D(A^e)$ for $t > 0$. Using the results of the previous study (homogeneous ABC), one can use the Hille-Yosida Theorem. The assumptions and conclusions are summarized below.

Theorem 5.2.12 *Consider a perfect medium in a domain $\Omega \subset \mathbb{R}^3$, with tensor fields $\mathbb{e}$ and $\mathbb{m}$ that fulfill assumption (5.10). Its boundary is split as $\Gamma = \Gamma_P \cup \Gamma_A$, with $\Gamma_P \cap \Gamma_A = \emptyset$. In a neighborhood of Γ_A, the medium is homogeneous.*

1. *Assume that*

$$\begin{cases} \boldsymbol{E}_0 \in \boldsymbol{H}_{0,\Gamma_P}(\mathbf{curl}, \Omega),\ \boldsymbol{H}_0 \in \boldsymbol{H}(\mathbf{curl}, \Omega) \\ \boldsymbol{J} \in C^1(\mathbb{R}^+; \boldsymbol{L}^2(\Omega)), \\ \boldsymbol{g}^\star \in C^2(\mathbb{R}^+, \mathbf{curl}_\Gamma(H^{1/2}_{zmv}(\Gamma_A))) + C^2(\mathbb{R}^+, \mathbf{grad}_\Gamma(H^{1/2}_{zmv}(\Gamma_A))) \end{cases};$$

   thus, there exists one, and only one, couple of electromagnetic fields $(\boldsymbol{E}, \boldsymbol{H})$:

$$\begin{cases} (\boldsymbol{E},\boldsymbol{E}') \in C^0(\mathbb{R}^+;\boldsymbol{H}_{0,\Gamma_P}(\mathbf{curl},\Omega)) \times C^0(\mathbb{R}^+;\boldsymbol{L}^2(\Omega)) \\ (\boldsymbol{H},\boldsymbol{H}') \in C^0(\mathbb{R}^+;\boldsymbol{H}(\mathbf{curl},\Omega)) \times C^0(\mathbb{R}^+;\boldsymbol{L}^2(\Omega)) \end{cases},$$

governed by Eqs. (5.3-5.4) and (5.7), supplemented with the boundary conditions (5.9) *on* Γ_P *and (5.20) on* Γ_A*.*

2. *Assume, in addition, that*

$$\begin{cases} \operatorname{div} \mathbb{e}\boldsymbol{E}_0 = \varrho(0),\ \operatorname{div} \mathbb{m}\boldsymbol{H}_0 = 0,\ \mathbb{m}\boldsymbol{H}_0 \cdot \boldsymbol{n}_{|\Gamma_P} = 0 \\ \varrho(0) \in H^{-1}(\Omega),\ \dfrac{\partial \varrho}{\partial t} + \operatorname{div} \boldsymbol{J} = 0, \quad t > 0 \end{cases};$$

thus, there exists one, and only one, couple of electromagnetic fields $(\boldsymbol{E},\boldsymbol{H})$*:*

$$\begin{cases} (\boldsymbol{E},\boldsymbol{E}') \in C^0(\mathbb{R}^+;\boldsymbol{H}_{0,\Gamma_P}(\mathbf{curl},\Omega)) \times C^0(\mathbb{R}^+;\boldsymbol{L}^2(\Omega)) \\ (\boldsymbol{H},\boldsymbol{H}') \in C^0(\mathbb{R}^+;\boldsymbol{H}(\mathbf{curl},\Omega) \cap \boldsymbol{H}_{0,\Gamma_P}(\operatorname{div} \mathbb{m},\Omega)) \\ \qquad\qquad\qquad\qquad \times C^0(\mathbb{R}^+;\boldsymbol{H}_{0,\Gamma_P}(\operatorname{div} \mathbb{m},\Omega)) \end{cases},$$

which solves the Maxwell's system of equations (5.3-5.7), supplemented with the boundary conditions (5.9) *on* Γ_P *and (5.20) on* Γ_A*.*

In both instances, the electromagnetic fields depend continuously on the data.

Proof.

1. Let us choose liftings of the trace on Γ_A $(\boldsymbol{E}^\star,\boldsymbol{H}^\star)$ as in (5.31), and then introduce the fields $(\boldsymbol{E}^-,\boldsymbol{H}^-)$ of $D(A^e)$, governed by (5.32-5.34). Then, $(\widetilde{\boldsymbol{E}}^-,\widetilde{\boldsymbol{H}}^-) = (\mathbb{e}^{1/2}\boldsymbol{E}^-,\mathbb{m}^{1/2}\boldsymbol{H}^-)$ is itself governed by a first-order time-dependent system, in the function space V^e, with operator A^e and data

$$f^e = \begin{pmatrix} -\mathbb{e}^{-1/2}(\boldsymbol{J}+\boldsymbol{J}^-) \\ -\mathbb{m}^{-1/2}\boldsymbol{K}^- \end{pmatrix},\ u_0^e = \begin{pmatrix} \mathbb{e}^{1/2}(\boldsymbol{E}_0 - \boldsymbol{E}^\star(0)) \\ \mathbb{m}^{1/2}(\boldsymbol{H}_0 - \boldsymbol{H}^\star(0)) \end{pmatrix}.$$

According to Proposition 5.2.8, A^e is maximal monotone. All assumptions about the Hille-Yosida Theorem are fulfilled, so there exists $(\widetilde{\boldsymbol{E}}^-,\widetilde{\boldsymbol{H}}^-)$ governed by the first-order system, which depends continuously on the data f^e, u_0^e. Hence, there exist electromagnetic fields $(\boldsymbol{E},\boldsymbol{H}) = (\boldsymbol{E}^\star + \boldsymbol{E}^-, \boldsymbol{H}^\star + \boldsymbol{H}^-)$ governed by Eqs. (5.3-5.4) and (5.7), supplemented with the boundary conditions (5.9) on Γ_P and (5.20) on Γ_A, that depend continuously on the data $\boldsymbol{g}^\star$, $\boldsymbol{J}$ and $(\boldsymbol{E}_0,\boldsymbol{H}_0)$. To establish uniqueness, let us assume that two solutions exist, and thus the scaled difference is a solution to the first-order system with zero data. Hence, it vanishes, which yields uniqueness.
2. One again uses the process described in Remark 5.1.2 to conclude.

■

5.2.5 Truncated interior problem

The truncated interior problem will be addressed in the upcoming §7.2.2.

5.2.6 Notes on truncation

Let us denote by $(\boldsymbol{E}^{ex}, \boldsymbol{H}^{ex})$ the solution to the non-truncated (exterior, interior) problem, and by $(\boldsymbol{E}_R, \boldsymbol{H}_R)$ the solution to the truncated (exterior, interior) problem. The index $_R$ here stands for the radius of the truncating sphere, and $\Omega = \Omega_R$ with obvious notations. Little is known in general, in the time-dependent case,[10] on the convergence when R goes to infinity of $(\boldsymbol{E}_R, \boldsymbol{H}_R)$ towards the exact electromagnetic fields $(\boldsymbol{E}^{ex}, \boldsymbol{H}^{ex})_{|\Omega_R}$.
On the one hand, with data compactly supported in Ω_R (in particular, $\boldsymbol{g}^\star = 0$), the exact and truncated (with a homogeneous ABC) solutions will coincide until they become non-zero at the artificial boundary. As a matter of fact, $(\boldsymbol{E}^{ex}, \boldsymbol{H}^{ex})_{|\Omega_R}$ and $(\boldsymbol{E}_R, \boldsymbol{H}_R)$ solve the same first-order system with a homogeneous artificial boundary condition, as long as they vanish on Γ_A. After that, they differ. This is due to the finite propagation speed. So, the larger R is, the longer the solutions coincide.
On the other hand, we refer to [100] for convergence results concerning the solution to the 2D scalar wave equation, in fixed regions (R is given). Among other things, it is proven there that one can achieve convergence on finite time intervals by increasing the order of the ABC. If α denotes the order, then, for $T > 0$ and $R' < R$, the error bound writes $\max_{t\in[0,T]} \|u(t) - u_R(t)\|_{L^2(\Omega_{R'})} \leq C(T)\exp(-\alpha)$.
In another direction, if the data are compactly supported in time (and space), one expects the energy to decay in any bounded region as time goes to infinity. But, according to, for instance, [174, 8, 33] and References therein, one can establish the exponential decay of the electromagnetic energy of $(\boldsymbol{E}_R, \boldsymbol{H}_R)$. This proves that $(\boldsymbol{E}^{ex}(t), \boldsymbol{H}^{ex}(t))_{|\Omega_R}$ and $(\boldsymbol{E}_R(t), \boldsymbol{H}_R(t))$ converge to the same limit – 0 – when t goes to infinity.

5.2.7 Comments

When the Silver-Müller ABCs are used, we refer to the nice study by Remaki and Poupaud in [181, 175] to achieve well-posedness in the "classical" cases (domains with smooth boundaries). For higher-order conditions, very few theoretical results seem to be available; we refer to [100, 132] for the (scalar) equations. On the other hand, to bound the domain, one can also consider using perfectly matched layers (PMLs). Interestingly, proving the well-posedness of the resulting models is again a challenging issue: for results on this topic, we refer to the intertwined works of Abarbanel and Gottlieb [1, 2], and of Bécache, Joly *et al.* cf. [37, 36].
More details on the analysis of dispersive media can be found in [204]. More generally, for models that take into account media with memory, that is, constitutive relations including a convolution product in time, we refer, for instance, to the works of Stratis *et al.*, such as [140, 182]. Finally, models

[10] The situation is different for time-harmonic problems (see §8).

including boundary conditions with memory or models including non-linear boundary conditions can also be solved mathematically (see [107, 8, 194] and references therein).

6

Analyses of approximate models

In this chapter, we specifically study the approximate models that we derived from Maxwell's equations. We refer to Chapter 1 for the models, and we rely on the mathematical tools introduced in Chapters 2, 3 and 4. Unless otherwise specified, we consider complex-valued function spaces. Constants that are *independent of the data*, but that may depend on the domain or on the parameters defining the model, are generically denoted by C, C_0, C_1, etc. We provide incremental proofs for the well-posedness of the static, quasi-static and Darwin models, in the sense that solving the quasi-static models relies on the solution of static problems, whereas solving the Darwin models relies on the solution of static and quasi-static problems.

We let $\Omega \subset \mathbb{R}^3$ be a domain[1] made of a perfect medium; the medium is characterized by the tensor fields $\mathbb{c}$, $\mathbb{\mu}$ that fulfill assumptions (5.10). Unless otherwise specified, we assume that the medium is encased in a perfect conductor.
On the other hand, the domain is such that either $\mathbf{(Top)}_{I=0}$ or $\mathbf{(Top)}_{I>0}$ holds (cf.§3.2):

- if $\mathbf{(Top)}_{I=0}$ holds: $\dot{\Omega} = \Omega$;
- if $\mathbf{(Top)}_{I>0}$ holds: existence of piecewise plane cuts $(\Sigma_i)_{1\leq i\leq I}$, such that the resulting $\dot{\Omega} = \Omega \setminus \bigcup_{i=1}^{I} \Sigma_i$ is pseudo-Lipschitz (and connected).

When applicable, we denote by $\boldsymbol{n}$ a unit normal vector field to $(\Sigma_i)_{1\leq i\leq I}$. The notation $\forall i$ means $1 \leq i \leq I$, so it is empty when $\mathbf{(Top)}_{I=0}$ holds.
When the boundary Γ is not connected, we let $(\Gamma_k)_{0\leq k\leq K}$ be its connected components, where Γ_0 is the boundary of the unbounded component of the exterior open set $\mathbb{R}^3 \setminus \overline{\Omega}$, whereas we let $\Gamma_0 = \Gamma$ if the boundary is connected. The notation $\forall k$ means $0 \leq k \leq K$.

Finally, we denote by $\|\cdot\|$ and $(\cdot \mid \cdot)$ the canonical norm and scalar product of $L^2(\Omega)$ or $\boldsymbol{L}^2(\Omega)$.

[1] We recall that this word designates a bounded, open, connected subset with a Lipschitz boundary.

6.1 Electrostatic problem

For the static models, our starting point is Eqs. (1.104), whose solutions are the static fields $\boldsymbol{E}^{stat}$ and $\boldsymbol{B}^{stat}$. In this subsection, we consider slightly more general systems of equations, allowing the curl of $\boldsymbol{E}^{stat}$ to be non-zero. We omit the ^{stat}, as it is clear that we are interested in solving the static equations.

6.1.1 Definitions and results for the electrostatic problem

The electrostatic-like problem that we consider is governed by

$$\begin{cases} \textit{Find } \boldsymbol{E} \in \boldsymbol{L}^2(\Omega) \textit{ such that} \\ \mathbf{curl}\, \boldsymbol{E} = \mathtt{f} \text{ in } \Omega \\ \operatorname{div} \mathbb{e}\boldsymbol{E} = \mathtt{g} \text{ in } \Omega \\ \boldsymbol{E} \times \boldsymbol{n} = 0 \text{ on } \Gamma, \end{cases} \tag{6.1}$$

with $(\mathtt{f}, \mathtt{g}) \in \boldsymbol{L}^2(\Omega) \times H^{-1}(\Omega)$. These *a priori* regularity requirements[2] stem from our initial modelling assumption, namely that $\boldsymbol{E} \in \boldsymbol{H}(\mathbf{curl}, \Omega)$. The electrostatic field is subject to vanishing tangential trace on the boundary, so it is natural to include this property in the model. To start with, let us characterize curl-free and divergence(ε)-free fields, with vanishing tangential trace. Let

$$\begin{aligned} \boldsymbol{Z}_N(\Omega; \mathbb{e}) &:= \boldsymbol{H}_0(\mathbf{curl}\, 0, \Omega) \cap \boldsymbol{H}(\operatorname{div} \mathbb{e} 0, \Omega), \\ Q_N(\Omega; \mathbb{e}) &:= \{q^\varepsilon \in H^1_{\partial\Omega}(\Omega) \,:\, \operatorname{div} \mathbb{e}\, \mathbf{grad}\, q^\varepsilon = 0 \text{ in } \Omega\}. \end{aligned}$$

Proposition 6.1.1 *The dimension of the vector space $\boldsymbol{Z}_N(\Omega; \mathbb{e})$ is equal to K. Furthermore, a basis of $\boldsymbol{Z}_N(\Omega; \mathbb{e})$ is the set of functions $(\mathbf{grad}\, q^\varepsilon_\ell)_{1 \le \ell \le K}$, where each $q^\varepsilon_\ell \in Q_N(\Omega; \mathbb{e})$ is such that $q^\varepsilon_\ell = \delta_{k\ell}$ on Γ_k, $\forall k$; $(q^\varepsilon_\ell)_{1 \le \ell \le K}$ are real-valued functions. Finally, an element $\boldsymbol{z}$ of $\boldsymbol{Z}_N(\Omega; \mathbb{e})$ can be characterized by its fluxes $(\langle \mathbb{e}\boldsymbol{z} \cdot \boldsymbol{n}, 1 \rangle_{H^{1/2}(\Gamma_k)})_{1 \le k \le K}$.*

Proof. Obviously, the family $(\mathbf{grad}\, q^\varepsilon_\ell)_\ell$ is included in $\boldsymbol{Z}_N(\Omega; \mathbb{e})$. Then, given $\boldsymbol{z} \in \boldsymbol{Z}_N(\Omega; \mathbb{e})$, we find that it can be written as a linear combination of $(\mathbf{grad}\, q^\varepsilon_\ell)_\ell$, in the same spirit as Theorem 3.3.9 (extraction of scalar potentials). In particular, the dimension of $\boldsymbol{Z}_N(\Omega; \mathbb{e})$ is equal to K. Given ℓ, we find that q^ε_ℓ is a real-valued function, since it solves a well-posed problem with real-valued coefficients and data (cf. Proposition 3.3.7).
To prove that elements of $\boldsymbol{Z}_N(\Omega; \mathbb{e})$ can also be characterized by their fluxes on the connected components on the boundary, we introduce the mapping

$$Flux \;:\; \begin{cases} \boldsymbol{Z}_N(\Omega; \mathbb{e}) \to \mathbb{C}^K \\ \boldsymbol{z} \mapsto (\langle \mathbb{e}\boldsymbol{z} \cdot \boldsymbol{n}, 1 \rangle_{H^{1/2}(\Gamma_k)})_{1 \le k \le K} \end{cases}$$

and prove that it is a bijection. Since the vector spaces $\boldsymbol{Z}_N(\Omega; \mathbb{e})$ and $\mathbb{C}^K$ are finite-dimensional with equal dimension, we simply have to check that the

[2] Given $\boldsymbol{w} \in \boldsymbol{L}^2(\Omega)$, one has $\operatorname{div} \mathbb{e}\boldsymbol{w} \in H^{-1}(\Omega)$ and $\|\operatorname{div} \mathbb{e}\boldsymbol{w}\|_{H^{-1}(\Omega)} \le \|\mathbb{e}\boldsymbol{w}\|$.

kernel of $Flux$ is reduced to $\{0\}$. So, let $\boldsymbol{z} \in \ker(Flux)$. From the above, we know that there exists $q \in Q_N(\Omega;\mathfrak{c})$ such that $\boldsymbol{z} = \mathbf{grad}\, q$. Then, recalling that $q_{|\Gamma_0} = 0$ and $q_{|\Gamma_k} = cst_k$ for $1 \le k \le K$, we compute, by integration by parts,

$$\begin{aligned}\|\mathfrak{c}^{1/2}\boldsymbol{z}\|^2 = (\mathfrak{c}\boldsymbol{z}|\boldsymbol{z}) = (\mathfrak{c}\boldsymbol{z}|\,\mathbf{grad}\, q) &= \sum_k \langle \mathfrak{c}\boldsymbol{z}\cdot\boldsymbol{n}, q\rangle_{H^{1/2}(\Gamma_k)} \\ &= \sum_{1\le k\le K} \overline{q}_{|\Gamma_k}\langle \mathfrak{c}\boldsymbol{z}\cdot\boldsymbol{n}, 1\rangle_{H^{1/2}(\Gamma_k)} = 0.\end{aligned}$$

Hence, we have that $\boldsymbol{z} = 0$, and the characterization by fluxes is shown. ■

All norms are equivalent on finite-dimensional vector spaces. As a consequence, we may use any norm like

$$\boldsymbol{z} \mapsto \left|(\langle \mathfrak{c}\boldsymbol{z}\cdot\boldsymbol{n}, 1\rangle_{H^{1/2}(\Gamma_k)})_{1\le k\le K}\right|_p, \text{ or } \boldsymbol{z} = \mathbf{grad}\, q \mapsto \left|(q_{|\Gamma_k})_{1\le k\le K}\right|_p,$$

with $1 \le p \le \infty$, to measure elements of $\boldsymbol{Z}_N(\Omega;\mathfrak{c})$. Evidently, any other norm would be appropriate. From now on, we call $|\cdot|_{\boldsymbol{Z}_N^\varepsilon}$ the chosen norm.

Remark 6.1.2 *Given $\boldsymbol{z} \in \boldsymbol{Z}_N(\Omega;\mathfrak{c})$, its fluxes are always balanced, i.e., one automatically has $\langle \mathfrak{c}\boldsymbol{z}\cdot\boldsymbol{n}, 1\rangle_{H^{1/2}(\Gamma_0)} = -\sum_{1\le k\le K}\langle \mathfrak{c}\boldsymbol{z}\cdot\boldsymbol{n}, 1\rangle_{H^{1/2}(\Gamma_k)}$.*

The second mathematical tool is a generalization of the result of Theorem 3.5.1, which ensures one can actually choose the divergence(ε) of the vector potential to be any element of $H^{-1}(\Omega)$, as proven below.
As we saw in Remark 3.5.2, if $\boldsymbol{f} := \mathbf{curl}\,\boldsymbol{w}$ with $\boldsymbol{w} \in \boldsymbol{H}_0(\mathbf{curl},\Omega)$, one automatically has $\langle \boldsymbol{f}\cdot\boldsymbol{n}, 1\rangle_{\Sigma_i} = 0$, $\forall i$. Hence, we look for curls in

$$\boldsymbol{H}_0^\Sigma(\operatorname{div} 0,\Omega) := \{\boldsymbol{f} \in \boldsymbol{H}_0(\operatorname{div} 0,\Omega) \ : \ \langle \boldsymbol{f}\cdot\boldsymbol{n}, 1\rangle_{\Sigma_i} = 0, \ \forall i\}.$$

Proposition 6.1.3 *Let Ω be a domain such that $(\mathbf{Top})_{I=0}$ or $(\mathbf{Top})_{I>0}$ is fulfilled. Then, given $g \in H^{-1}(\Omega)$ and $\boldsymbol{f} \in \boldsymbol{H}_0^\Sigma(\operatorname{div} 0,\Omega)$, there exists $\boldsymbol{w} \in \boldsymbol{H}_0(\mathbf{curl},\Omega)$ such that*

$$\begin{aligned}&\mathbf{curl}\,\boldsymbol{w} = \boldsymbol{f}, \ \operatorname{div}\mathfrak{c}\boldsymbol{w} = g, \\ &\|\boldsymbol{w}\|_{\boldsymbol{H}(\mathbf{curl},\Omega)} \le C\,(\|\boldsymbol{f}\| + \|g\|_{H^{-1}(\Omega)}),\end{aligned} \tag{6.2}$$

with $C > 0$.

Proof. Given $\boldsymbol{f}$, let us first use Theorem 3.5.1. Namely, there exists $\boldsymbol{y} \in \boldsymbol{H}_0(\mathbf{curl},\Omega)$ such that $\boldsymbol{f} = \mathbf{curl}\,\boldsymbol{y}$ and $\operatorname{div}\boldsymbol{y} = 0$ in Ω, with $\|\boldsymbol{y}\|_{\boldsymbol{H}(\mathbf{curl},\Omega)} \le C_0\|\boldsymbol{f}\|$ for some $C_0 > 0$.
Then, let us change the divergence(ε) of the potential, without changing the curl. For that, we solve the well-posed variational formulation[3]

[3] The corresponding variational formulation is well-posed, according to the Lax-Milgram Theorem 4.2.8 and the Poincaré inequality of Theorem 2.1.35 in $H_0^1(\Omega)$. Indeed, thanks to the assumptions about $\mathfrak{c}$, the semi-norm $\|\mathfrak{c}^{1/2}\,\mathbf{grad}\,\cdot\|$ is a norm on $H_0^1(\Omega)$ equivalent to the canonical norm.

$$\begin{cases} \textit{Find } z \in H_0^1(\Omega) \textit{ such that} \\ \forall z' \in H_0^1(\Omega),\ (\mathbb{c}\,\mathbf{grad}\, z|\,\mathbf{grad}\, z') = (\mathbb{c}\boldsymbol{y}|\,\mathbf{grad}\, z') + \langle g, z'\rangle_{H_0^1(\Omega)}\,. \end{cases}$$

This problem has one, and only one, solution, and moreover, one has $\|z\|_{H^1(\Omega)} \leq C_1 \|\operatorname{div} \mathbb{c}\boldsymbol{y} - g\|_{H^{-1}(\Omega)}$, for some $C_1 > 0$. Let us set $\boldsymbol{w} = \boldsymbol{y} - \mathbf{grad}\, z$. By construction, the potential $\boldsymbol{w} \in \boldsymbol{H}_0(\mathbf{curl}, \Omega)$ is such that $\boldsymbol{f} = \mathbf{curl}\, \boldsymbol{w}$ in $\boldsymbol{L}^2(\Omega)$ and $\operatorname{div} \mathbb{c}\boldsymbol{w} = g$ in $H^{-1}(\Omega)$, with continuous dependence, as in (6.2). ■

We are now in a position to solve the electrostatic problem, and thus obtain an initial way to measure/characterize the electrostatic field. To that aim, we introduce the orthogonal projection operator $P_{\boldsymbol{Z}_N^\varepsilon}$ from $\boldsymbol{H}(\mathbf{curl}, \Omega)$ to $\boldsymbol{Z}_N(\Omega; \mathbb{c})$, with respect to the scalar product $(\cdot|\cdot)_{\varepsilon, b\,\mathbf{curl}} : (\boldsymbol{v}, \boldsymbol{w}) \mapsto (\mathbb{c}\boldsymbol{v}|\boldsymbol{w}) + (\mathbb{b}\,\mathbf{curl}\, \boldsymbol{v}|\,\mathbf{curl}\, \boldsymbol{w})$, where $\mathbb{b}$ is a tensor field that fulfills an assumption like (5.10).

Theorem 6.1.4 *Let Ω be a domain such that* $\mathbf{(Top)}_{I=0}$ *or* $\mathbf{(Top)}_{I>0}$ *is fulfilled. Then, the mapping*

$$Stat_E \ :\ \begin{cases} \boldsymbol{H}_0(\mathbf{curl}, \Omega) \to \boldsymbol{H}_0^\Sigma(\operatorname{div} 0, \Omega) \times H^{-1}(\Omega) \\ \boldsymbol{w} \mapsto (\mathbf{curl}\, \boldsymbol{w}, \operatorname{div} \mathbb{c}\boldsymbol{w}) \end{cases}$$

is surjective, and its kernel is equal to $\boldsymbol{Z}_N(\Omega; \mathbb{c})$.
As a consequence, one has a Weber inequality

$$\begin{aligned} &\exists C_E > 0,\ \forall \boldsymbol{w} \in \boldsymbol{H}_0(\mathbf{curl}, \Omega), \\ &\|\boldsymbol{w}\|_{\boldsymbol{H}(\mathbf{curl},\Omega)} \leq C_E(\|\,\mathbf{curl}\, \boldsymbol{w}\| + \|\operatorname{div} \mathbb{c}\boldsymbol{w}\|_{H^{-1}(\Omega)} + |P_{\boldsymbol{Z}_N^\varepsilon} \boldsymbol{w}|_{\boldsymbol{Z}_N^\varepsilon}). \end{aligned} \tag{6.3}$$

Proof. The mapping $Stat_E$ is surjective, thanks to Proposition 6.1.3, and, obviously, its kernel is equal to $\boldsymbol{Z}_N(\Omega; \mathbb{c})$.
Now, observe that we can decompose $\boldsymbol{H}_0(\mathbf{curl}, \Omega)$ orthogonally as

$$\boldsymbol{H}_0(\mathbf{curl}, \Omega) = \boldsymbol{Z}_N(\Omega; \mathbb{c}) \overset{\perp_{\varepsilon,b}}{\oplus} \boldsymbol{H}_0^\Gamma(\mathbf{curl}, \Omega),$$

using the scalar product $(\cdot|\cdot)_{\varepsilon, b\,\mathbf{curl}}$: $\boldsymbol{H}_0^\Gamma(\mathbf{curl}, \Omega)$ is defined as

$$\boldsymbol{H}_0^\Gamma(\mathbf{curl}, \Omega) := \{\boldsymbol{w} \in \boldsymbol{H}_0(\mathbf{curl}, \Omega)\ :\ P_{\boldsymbol{Z}_N^\varepsilon} \boldsymbol{w} = 0\}.$$

Hence, going one step further in the proof of Proposition 6.1.3, given $g \in H^{-1}(\Omega)$ and $\boldsymbol{f} \in \boldsymbol{H}_0^\Sigma(\operatorname{div} 0, \Omega)$, it is possible to choose a modified potential $\boldsymbol{y}$ that belongs to $\boldsymbol{H}_0^\Gamma(\mathbf{curl}, \Omega)$ such that $\mathbf{curl}\, \boldsymbol{y} = \boldsymbol{f}$ and $\operatorname{div} \mathbb{c}\boldsymbol{y} = g$, namely $\boldsymbol{y} = \boldsymbol{w} - P_{\boldsymbol{Z}_N^\varepsilon} \boldsymbol{w}$. It follows that $Stat_E$ is an isomorphism from $\boldsymbol{H}_0^\Gamma(\mathbf{curl}, \Omega)$ to $\boldsymbol{H}_0^\Sigma(\operatorname{div} 0, \Omega) \times H^{-1}(\Omega)$, according to the open mapping Theorem 4.1.4:

$$\begin{aligned} &\exists C_0 > 0,\ \forall \boldsymbol{y} \in \boldsymbol{H}_0^\Gamma(\mathbf{curl}, \Omega), \\ &\|\boldsymbol{y}\|_{\boldsymbol{H}(\mathbf{curl},\Omega)} \leq C_0\,(\|\,\mathbf{curl}\, \boldsymbol{y}\| + \|\operatorname{div} \mathbb{c}\boldsymbol{y}\|_{H^{-1}(\Omega)}). \end{aligned}$$

Finally, using the orthogonal decomposition of $\boldsymbol{H}_0(\mathbf{curl}, \Omega)$, one concludes that the Weber inequality (6.3) holds. ■

An important by-product of the Weber inequality (6.3) is that the $\boldsymbol{L}^2(\Omega)$-norm of the electrostatic field is controlled by its curl (measured in $\boldsymbol{L}^2(\Omega)$), its divergence(ε) (measured in $H^{-1}(\Omega)$), and (possibly) a finite number of scalars.

It is possible to measure/characterize the electrostatic field differently. For that, let $s \in [0,1]$, and suppose that $\operatorname{div} \mathbb{e}\boldsymbol{E}$ belongs to $H^{-s}(\Omega)$. According to Definition 2.1.19, $H^{-s}(\Omega)$ can be endowed with a scalar product $(\cdot,\cdot)_{H^{-s}(\Omega)}$. Next, we introduce the function space

$$\boldsymbol{X}_{N,-s}(\Omega;\mathbb{e}) := \{\boldsymbol{f} \in \boldsymbol{H}_0(\mathbf{curl},\Omega) \ : \ \operatorname{div} \mathbb{e}\boldsymbol{f} \in H^{-s}(\Omega)\}, \tag{6.4}$$

a priori endowed with the graph norm $\boldsymbol{f} \mapsto \left\{ \|\boldsymbol{f}\|^2_{\boldsymbol{H}(\mathbf{curl},\Omega)} + \|\operatorname{div} \mathbb{e}\boldsymbol{f}\|^2_{H^{-s}(\Omega)} \right\}^{1/2}$. One can easily check that it is a Hilbert space, endowed with the associated scalar product. We also define

$$\boldsymbol{X}_N(\Omega;\mathbb{e}) := \{\boldsymbol{f} \in \boldsymbol{H}_0(\mathbf{curl},\Omega) \ : \ \operatorname{div} \mathbb{e}\boldsymbol{f} \in L^2(\Omega)\}. \tag{6.5}$$

Obviously, $\boldsymbol{X}_N(\Omega;\mathbb{e}) = \boldsymbol{X}_{N,0}(\Omega;\mathbb{e})$.

Remark 6.1.5 *One has $\boldsymbol{X}_{N,-1}(\Omega;\mathbb{e}) = \boldsymbol{H}_0(\mathbf{curl},\Omega)$ algebraically and topologically. To derive the latter, we recall that the divergence(ε) mapping is continuous from $\boldsymbol{L}^2(\Omega)$ (or $\boldsymbol{H}_0(\mathbf{curl},\Omega)$) to $H^{-1}(\Omega)$.*

Then, one proceeds as before, using Proposition 6.1.3 as a starting point, and then introducing the orthogonal projection $P^{-s}_{\boldsymbol{Z}^\varepsilon_N}$ from $\boldsymbol{X}_{N,-s}(\Omega;\mathbb{e})$ to $\boldsymbol{Z}_N(\Omega;\mathbb{e})$, with respect to the following scalar product:

$$(\boldsymbol{v},\boldsymbol{w})_{\boldsymbol{X}_{N,-s}(\Omega;\mathbb{e})} := (\mathbb{e}\boldsymbol{v}|\boldsymbol{w}) + (\mathbb{b}\,\mathbf{curl}\,\boldsymbol{v}|\,\mathbf{curl}\,\boldsymbol{w}) + (\operatorname{div} \mathbb{e}\boldsymbol{v}, \operatorname{div} \mathbb{e}\boldsymbol{w})_{H^{-s}(\Omega)}, \tag{6.6}$$

where $\mathbb{b}$ is as above. In practice, we shall use the associated norm

$$\|\boldsymbol{v}\|_{\boldsymbol{X}_{N,-s}(\Omega;\mathbb{e})} := (\boldsymbol{v},\boldsymbol{v})^{1/2}_{\boldsymbol{X}_{N,-s}(\Omega;\mathbb{e})}$$

on $\boldsymbol{X}_{N,-s}(\Omega;\mathbb{e})$.

One can show the results below, adapting the proof of Theorem 6.1.4, and using the fact that $H^{-s}(\Omega) \subset H^{-1}(\Omega)$ (cf. (2.6)), so for all $g \in H^{-s}(\Omega)$, one has $\|g\|_{H^{-1}(\Omega)} \le C_s \|g\|_{H^{-s}(\Omega)}$ with C_s independent of g.

Theorem 6.1.6 *Let Ω be a domain such that* $\mathbf{(Top)}_{I=0}$ *or* $\mathbf{(Top)}_{I>0}$ *is fulfilled. Let $s \in [0,1]$. Then, the mapping*

$$Stat_E^{-s} \ : \ \begin{cases} \boldsymbol{X}_{N,-s}(\Omega;\mathbb{e}) \to \boldsymbol{H}_0^\Sigma(\operatorname{div} 0,\Omega) \times H^{-s}(\Omega) \\ \boldsymbol{w} \mapsto (\mathbf{curl}\,\boldsymbol{w}, \operatorname{div} \mathbb{e}\boldsymbol{w}) \end{cases}$$

is surjective, and its kernel is equal to $\boldsymbol{Z}_N(\Omega;\mathbb{e})$.
As a consequence, one has a Weber inequality

$$\exists C_E^{-s} > 0, \ \forall \boldsymbol{w} \in \boldsymbol{X}_{N,-s}(\Omega;\mathbb{e}),$$
$$\|\boldsymbol{w}\|_{\boldsymbol{X}_{N,-s}(\Omega;\mathbb{e})} \le C_E^{-s}(\|\,\mathbf{curl}\,\boldsymbol{w}\| + \|\operatorname{div} \mathbb{e}\boldsymbol{w}\|_{H^{-s}(\Omega)} + |P^{-s}_{\boldsymbol{Z}^\varepsilon_N}\boldsymbol{w}|_{\boldsymbol{Z}^\varepsilon_N}).$$

Finally, we remark that the projection operator onto $\boldsymbol{Z}_N(\Omega;\mathbb{c})$ is independent of s in the sense below.

Proposition 6.1.7 *Let $t \in [0,1]$. Given $\boldsymbol{w} \in \boldsymbol{X}_{N,-t}(\Omega;\mathbb{c})$, one has, for all $s \in [t,1]$, $P^{-s}_{\boldsymbol{Z}^\varepsilon_N}\boldsymbol{w} = P_{\boldsymbol{Z}^\varepsilon_N}\boldsymbol{w}$.*

Indeed, the definition of the scalar product of $\boldsymbol{X}_{N,-s}(\Omega;\mathbb{c})$ implies that $P^{-s}_{\boldsymbol{Z}^\varepsilon_N}\boldsymbol{w}$ is characterised as: $(\mathbb{c}P^{-s}_{\boldsymbol{Z}^\varepsilon_N}\boldsymbol{w} \mid \boldsymbol{z}) = (\mathbb{c}\boldsymbol{w} \mid \boldsymbol{z}),\ \forall \boldsymbol{z} \in \boldsymbol{Z}_N(\Omega;\mathbb{c})$.

To summarize, we have solved the electrostatic-like problem (6.1) (see Theorems 6.1.4 or 6.1.6). In the process, we have seen that, to achieve uniqueness, the value $P_{\boldsymbol{Z}^\varepsilon_N}\boldsymbol{E}$ must be known. So, we complement (6.1) with $P_{\boldsymbol{Z}^\varepsilon_N}\boldsymbol{E} = \mathtt{e}$, for some data $\mathtt{e} \in \boldsymbol{Z}_N(\Omega;\mathbb{c})$: the "full" electrostatic-like problem writes

$$\begin{cases} \textit{Find } \boldsymbol{E} \in \boldsymbol{L}^2(\Omega) \textit{ such that} \\ \mathbf{curl}\,\boldsymbol{E} = \mathtt{f} \text{ in } \Omega \\ \operatorname{div}\mathbb{c}\boldsymbol{E} = \mathtt{g} \text{ in } H^{-1}(\Omega) \\ P_{\boldsymbol{Z}^\varepsilon_N}\boldsymbol{E} = \mathtt{e} \\ \boldsymbol{E}\times\boldsymbol{n} = 0 \text{ on } \Gamma, \end{cases} \tag{6.7}$$

with data $(\mathtt{f},\mathtt{g},\mathtt{e}) \in \boldsymbol{H}^\Sigma_0(\operatorname{div} 0,\Omega) \times H^{-1}(\Omega) \times \boldsymbol{Z}_N(\Omega;\mathbb{c})$.

To solve this problem *variationally*, we propose several approaches below, which depend on whether or not one considers some equations as constraints.

6.1.2 Solving the electrostatic problem: mixed formulation

To build the first formulation, we remark that for $\boldsymbol{E} \in \boldsymbol{L}^2(\Omega)$, the equations $\operatorname{div}\mathbb{c}\boldsymbol{E} = \mathtt{g}$ in $H^{-1}(\Omega)$ and $P_{\boldsymbol{Z}^\varepsilon_N}\boldsymbol{E} = \mathtt{e}$ can be reformulated equivalently as

$$\begin{cases} \forall (q,\boldsymbol{z}) \in H^1_0(\Omega) \times \boldsymbol{Z}_N(\Omega;\mathbb{c}), \\ (\mathbb{c}\boldsymbol{E} \mid \mathbf{grad}\, q + \boldsymbol{z}) = -\langle \mathtt{g}, q\rangle_{H^1_0(\Omega)} + (\mathbb{c}\mathtt{e} \mid \boldsymbol{z}). \end{cases} \tag{6.8}$$

Indeed, it is clear that the equations $\operatorname{div}\mathbb{c}\boldsymbol{E} = \mathtt{g}$ in $H^{-1}(\Omega)$ and $P_{\boldsymbol{Z}^\varepsilon_N}\boldsymbol{E} = \mathtt{e}$ imply (6.8). Whereas initially taking $q = 0$ in (6.8) yields $P_{\boldsymbol{Z}^\varepsilon_N}\boldsymbol{E} = \mathtt{e}$, and then taking $\boldsymbol{z} = 0$ yields $\operatorname{div}\mathbb{c}\boldsymbol{E} = \mathtt{g}$ in $H^{-1}(\Omega)$.

As before, $\mathbb{b}$ is a tensor field that fulfills an assumption like (5.10). Then, to take into account the remaining conditions in (6.7), we note that they imply

$$\begin{cases} \boldsymbol{E} \in \boldsymbol{H}_0(\mathbf{curl},\Omega), \\ \forall \boldsymbol{v} \in \boldsymbol{H}_0(\mathbf{curl},\Omega),\ (\mathbb{b}\,\mathbf{curl}\,\boldsymbol{E} \mid \mathbf{curl}\,\boldsymbol{v}) = (\mathbb{b}\mathtt{f} \mid \mathbf{curl}\,\boldsymbol{v}). \end{cases} \tag{6.9}$$

On the other hand, given $\boldsymbol{E} \in \boldsymbol{H}_0(\mathbf{curl},\Omega)$, one has $\mathbf{curl}\,\boldsymbol{E} \in \boldsymbol{H}^\Sigma_0(\operatorname{div} 0,\Omega)$ (cf. Remark 3.5.2). So, thanks to Proposition 6.1.3, there exists $\boldsymbol{v} \in \boldsymbol{H}_0(\mathbf{curl},\Omega)$ such that $\mathbf{curl}\,\boldsymbol{v} = \mathbf{curl}\,\boldsymbol{E} - \mathtt{f}$. Using $\boldsymbol{v}$ as a test function in (6.9), we determine that $\|\mathbb{b}^{1/2}(\mathbf{curl}\,\boldsymbol{E} - \mathtt{f})\| = 0$.

So, we conclude that the electrostatic field $\boldsymbol{E}$ is a solution to (6.7) if, and only if, it is governed by (6.8)-(6.9).

To solve this variational formulation (6.8)-(6.9), we now choose the *mixed or constrained framework* (4.7) with a Lagrange multiplier. To that aim, we set:

- $V_E = \boldsymbol{H}_0(\mathbf{curl}, \Omega)$; $Q_E = H_0^1(\Omega) \times \boldsymbol{Z}_N(\Omega; \mathbb{c})$;
- $a_E(\boldsymbol{v}, \boldsymbol{w}) = (\mathbb{b}\,\mathbf{curl}\,\boldsymbol{v} | \,\mathbf{curl}\,\boldsymbol{w})$; $b_E(\boldsymbol{v}, (q, \boldsymbol{z})) = (\mathbb{c}\boldsymbol{v} | \,\mathbf{grad}\, q + \boldsymbol{z})$;
- $\langle f_E, \boldsymbol{v}\rangle = (\mathbb{b}\mathtt{f} | \,\mathbf{curl}\,\boldsymbol{v})$; $\langle g_E, (q, \boldsymbol{z})\rangle = -\langle \mathtt{g}, q\rangle_{H_0^1(\Omega)} + (\mathbb{c}\mathtt{e}|\boldsymbol{z})$.

In V_E, we choose the norm $\|\cdot\|_{V_E}$ associated with the scalar product $(\cdot|\cdot)_{\varepsilon, b\,\mathbf{curl}}$. In Q_E, we choose the norm $\|(q, \boldsymbol{z})\|_{Q_E} = (\|\mathbb{c}^{1/2}\,\mathbf{grad}\, q\|^2 + \|\mathbb{c}^{1/2}\boldsymbol{z}\|^2)^{1/2}$. Note that, integrating by parts, it holds that

$$\forall q \in H_0^1(\Omega),\ \forall \boldsymbol{z} \in \boldsymbol{Z}_N(\Omega; \mathbb{c}),\ (\mathbb{c}\,\mathbf{grad}\, q|\boldsymbol{z}) = 0. \tag{6.10}$$

Consequently, $\|(q, \boldsymbol{z})\|_{Q_E} = \|\mathbb{c}^{1/2}(\mathbf{grad}\, q + \boldsymbol{z})\|$, for all $(q, \boldsymbol{z}) \in Q_E$.
The resulting mixed variational formulation writes

$$\begin{cases} \textit{Find } (\widetilde{\boldsymbol{E}}, (p, \boldsymbol{y})) \in V_E \times Q_E \textit{ such that} \\ \forall \boldsymbol{v} \in V_E,\ a_E(\widetilde{\boldsymbol{E}}, \boldsymbol{v}) + \overline{b_E(\boldsymbol{v}, (p, \boldsymbol{y}))} = \langle f_E, \boldsymbol{v}\rangle, \\ \forall (q, \boldsymbol{z}) \in Q_E,\ b_E(\widetilde{\boldsymbol{E}}, (q, \boldsymbol{z})) = \langle g_E, (q, \boldsymbol{z})\rangle. \end{cases} \tag{6.11}$$

Proposition 6.1.8 *The mixed variational formulation (6.11) is well-posed. In addition, the field $\widetilde{\boldsymbol{E}}$ is the solution to the electrostatic-like problem (6.7).*

Proof. To begin with, to prove that the mixed variational formulation (6.11) is well-posed, we have to check that the assumptions of the Babuska-Brezzi Theorem 4.2.19 are fulfilled.
Inf-sup condition: given $(q, \boldsymbol{z}) \in Q_E \setminus \{0\}$, we let $\boldsymbol{v} = \mathbf{grad}\, q + \boldsymbol{z} \in \boldsymbol{H}_0(\mathbf{curl}, \Omega)$, with norm $\|\boldsymbol{v}\|_{V_E} = \|\mathbb{c}^{1/2}(\mathbf{grad}\, q + \boldsymbol{z})\| = \|(q, \boldsymbol{z})\|_{Q_E}$. On the other hand, one has

$$b_E(\boldsymbol{v}, (q, \boldsymbol{z})) = (\mathbb{c}(\mathbf{grad}\, q + \boldsymbol{z}) | \,\mathbf{grad}\, q + \boldsymbol{z}) = \|(q, \boldsymbol{z})\|_{Q_E}^2.$$

Hence, it follows that

$$\inf_{(q,\boldsymbol{z}) \in Q_E \setminus \{0\}} \sup_{\boldsymbol{v} \in V_E \setminus \{0\}} \frac{|b_E(\boldsymbol{v}, (q, \boldsymbol{z}))|}{\|\boldsymbol{v}\|_{V_E}\, \|(q, \boldsymbol{z})\|_{Q_E}} \geq 1.$$

Coercivity on the kernel: the kernel is defined by

$$K_E = \{\boldsymbol{v} \in V_E \ :\ b_E(\boldsymbol{v}, (q, \boldsymbol{z})) = 0,\ \forall (q, \boldsymbol{z}) \in Q_E\}.$$

One can easily check that $K_E = \{\boldsymbol{v} \in \boldsymbol{H}_0(\mathbf{curl}, \Omega) \cap \boldsymbol{H}(\operatorname{div} \mathbb{c}0, \Omega) \ :\ P_{\boldsymbol{Z}_N^{\varepsilon}} \boldsymbol{v} = 0\}$. According to the Weber inequality (6.3), the sesquilinear form a_E is coercive on $K_E \times K_E$, which shows that (6.11) is well-posed.
Next, for (6.11) to be equivalent to (6.8)-(6.9), and hence for $\widetilde{\boldsymbol{E}}$ to be equal

to $\boldsymbol{E}$, we have to check that the Lagrange multiplier $(p, \boldsymbol{y})$ vanishes in (6.11). Thanks to the orthogonality property (6.10), we obtain, with the test function $\boldsymbol{v} = \mathbf{grad}\, p + \boldsymbol{y} \in \boldsymbol{H}_0(\mathbf{curl}, \Omega)$ in (6.11),

$$\|\mathbb{c}^{1/2}\, \mathbf{grad}\, p\|^2 + \|\mathbb{c}^{1/2}\boldsymbol{y}\|^2 = 0, \text{ so } (p, \boldsymbol{y}) = (0, 0).$$

This proves the last part of the proposition. ■

6.1.3 Solving the electrostatic problem: augmented formulation

To build this second formulation, we assume[4] that the data $\mathtt{g}$ belongs to $H^{-t}(\Omega)$ for some $t \in [0, 1]$, and let $s \in [t, 1]$. If $\boldsymbol{E}$ is the solution to (6.7), then it belongs to $\boldsymbol{X}_{N,-s}(\Omega; \mathbb{c})$. Furthermore, in the same spirit as (6.9) and with the help of Proposition 6.1.7, we remark that if we add up all contributions (one on the curl, one on the divergence(ε), one on the projection), it implies that $\boldsymbol{E}$ is governed by the "augmented" variational formulation

$$\begin{cases} \textit{Find } \boldsymbol{E} \in \boldsymbol{X}_{N,-s}(\Omega; \mathbb{c}) \textit{ such that} \\ \forall \boldsymbol{v} \in \boldsymbol{X}_{N,-s}(\Omega; \mathbb{c}), \\ (\mathbb{b}\, \mathbf{curl}\, \boldsymbol{E} | \mathbf{curl}\, \boldsymbol{v}) + (\mathrm{div}\, \mathbb{c}\boldsymbol{E}, \mathrm{div}\, \mathbb{c}\boldsymbol{v})_{H^{-s}(\Omega)} + (\mathbb{c} P_{\boldsymbol{Z}_N^\varepsilon} \boldsymbol{E} | P_{\boldsymbol{Z}_N^\varepsilon} \boldsymbol{v}) \\ \quad = (\mathbb{b}\mathtt{f} | \mathbf{curl}\, \boldsymbol{v}) + (\mathtt{g}, \mathrm{div}\, \mathbb{c}\boldsymbol{v})_{H^{-s}(\Omega)} + (\mathbb{c}\mathtt{e} | P_{\boldsymbol{Z}_N^\varepsilon} \boldsymbol{v}). \end{cases} \tag{6.12}$$

Here, it is important to note that all equations in (6.7) are directly taken into account via test functions that belong to $\boldsymbol{X}_{N,-s}(\Omega; \mathbb{c})$.
Reciprocally, if $\boldsymbol{E}$ is governed by (6.12), first, one finds, with test functions $\boldsymbol{v}$ in $\boldsymbol{Z}_N(\Omega; \mathbb{c})$, that $P_{\boldsymbol{Z}_N^\varepsilon} \boldsymbol{E} = \mathtt{e}$: the last terms on the left- and right-hand sides of (6.12) cancel each other out. Second, one notices that, because the solution belongs *a priori* to $\boldsymbol{X}_{N,-s}(\Omega; \mathbb{c})$, one has $\mathtt{g} - \mathrm{div}\, \mathbb{c}\boldsymbol{E} \in H^{-s}(\Omega) \subset H^{-1}(\Omega)$. Hence, there exists one, and only one, scalar field q in $H_0^1(\Omega)$ such that $\mathrm{div}\, \mathbb{c}\, \mathbf{grad}\, q = \mathtt{g} - \mathrm{div}\, \mathbb{c}\boldsymbol{E}$ (cf. the proof of Proposition 6.1.3). Now, $\mathbf{grad}\, q$ belongs to $\boldsymbol{X}_{N,-s}(\Omega; \mathbb{c})$, so it can be used as a test function to yield $\|\mathtt{g} - \mathrm{div}\, \mathbb{c}\boldsymbol{E}\|_{H^{-s}(\Omega)} = 0$: the second terms on the left- and right-hand sides of (6.12) cancel other other out. Third, one concludes that $\|\mathbb{b}^{1/2}(\mathbf{curl}\, \boldsymbol{E} - \mathtt{f})\| = 0$, as in the mixed variational formulation paragraph.
To solve this augmented variational formulation (6.12), we choose the *classical framework* (4.3) in the same Hilbert space. So, we introduce:

- $\widetilde{V}_E = \boldsymbol{X}_{N,-s}(\Omega; \mathbb{c})$;
- $\widetilde{a}_E(\boldsymbol{v}, \boldsymbol{w}) = (\mathbb{b}\, \mathbf{curl}\, \boldsymbol{v} | \mathbf{curl}\, \boldsymbol{w}) + (\mathrm{div}\, \mathbb{c}\boldsymbol{v}, \mathrm{div}\, \mathbb{c}\boldsymbol{w})_{H^{-s}(\Omega)} + (\mathbb{c} P_{\boldsymbol{Z}_N^\varepsilon} \boldsymbol{v} | P_{\boldsymbol{Z}_N^\varepsilon} \boldsymbol{w})$;
- $\langle \widetilde{\boldsymbol{f}}_E, \boldsymbol{v} \rangle = (\mathbb{b}\mathtt{f} | \mathbf{curl}\, \boldsymbol{v}) + (\mathtt{g}, \mathrm{div}\, \mathbb{c}\boldsymbol{v})_{H^{-s}(\Omega)} + (\mathbb{c}\mathtt{e} | P_{\boldsymbol{Z}_N^\varepsilon} \boldsymbol{v})$.

In $\widetilde{V}_E$, we choose the norm $\|\cdot\|_{\widetilde{V}_E} = \|\cdot\|_{\boldsymbol{X}_{N,-s}(\Omega;\mathbb{c})}$.
The resulting augmented variational formulation writes

$$\begin{cases} \textit{Find } \widetilde{\boldsymbol{E}} \in \widetilde{V}_E \textit{ such that} \\ \forall \boldsymbol{v} \in \widetilde{V}_E,\ \widetilde{a}_E(\widetilde{\boldsymbol{E}}, \boldsymbol{v}) = \langle \widetilde{\boldsymbol{f}}_E, \boldsymbol{v} \rangle. \end{cases} \tag{6.13}$$

[4] This assumption is not restrictive, as it covers the case $\mathtt{g} \in H^{-1}(\Omega)$.

Proposition 6.1.9 *The augmented variational formulation (6.13) is well-posed, and the field $\widetilde{\boldsymbol{E}}$ is the solution to the electrostatic-like problem (6.7).*

Proof. According to the Weber inequality shown in Theorem 6.1.6 (with the projection operator $P_{\boldsymbol{Z}_N^\varepsilon}$, see Proposition 6.1.7), the sesquilinear form $\widetilde{a}_E$ is coercive on $\boldsymbol{X}_{N,-s}(\Omega;\mathbb{c})$. Hence, the augmented variational formulation (6.13) is well-posed, thanks to the Lax-Milgram Theorem 4.2.8. The fact that $\widetilde{\boldsymbol{E}} = \boldsymbol{E}$ follows from the equivalence between (6.7) and (6.13). ■

6.1.4 Solving the electrostatic problem: two-step formulation

What happens when one solves the actual electrostatic problem? One has $\mathtt{f} = 0$, so that $\boldsymbol{E}$ is always curl-free. According to Theorem 3.3.9, it follows that

$$\exists! \phi \in H_0^1(\Omega) \oplus Q_N(\Omega;\mathbb{c}) \text{ such that } \boldsymbol{E} = \mathbf{grad}\,\phi.$$

As we saw before, this electrostatic potential can be characterized by

$$\begin{cases} \textit{Find } \phi \in H_0^1(\Omega) \oplus Q_N(\Omega;\mathbb{c}) \textit{ such that} \\ \forall (q, q^\varepsilon) \in H_0^1(\Omega) \times Q_N(\Omega;\mathbb{c}), \\ (\mathbb{c}\,\mathbf{grad}\,\phi | \,\mathbf{grad}(q + q^\varepsilon)) = -\langle \mathbf{g}, q\rangle_{H_0^1(\Omega)} + (\mathbb{c}\mathbf{e} | \,\mathbf{grad}\, q^\varepsilon). \end{cases} \tag{6.14}$$

This suggests a third method for solving the electrostatic-like problem (6.7), which can be viewed as a two-step method. In particular, this method is built without resort to either a mixed formulation or an augmented formulation.

Let us focus on the other part of the field $\boldsymbol{E}$, which we characterize below. Due to Theorem 3.3.9, the space $\boldsymbol{H}_0(\mathbf{curl}\,0,\Omega)$ of Definition 2.2.11 is equal to $\mathbf{grad}[H_0^1(\Omega)] \oplus \mathbf{grad}[Q_N(\Omega;\mathbb{c})]$. Moreover, the sum is orthogonal with respect to the scalar product $(\cdot|\cdot)_{\varepsilon,b\,\mathbf{curl}}$. Next, define

$$\boldsymbol{K}_N(\Omega;\mathbb{c}) := \boldsymbol{H}_0(\mathbf{curl},\Omega) \cap \boldsymbol{H}(\operatorname{div}\mathbb{c}0,\Omega). \tag{6.15}$$

In the spirit of §3.7, one has the Helmholtz decomposition:

$$\boldsymbol{H}_0(\mathbf{curl},\Omega) = \mathbf{grad}[H_0^1(\Omega)] \overset{\perp_{\varepsilon,b}}{\oplus} \boldsymbol{K}_N(\Omega;\mathbb{c}). \tag{6.16}$$

Proposition 6.1.10 *Let $\mathbb{b}$ be a tensor field that fulfills an assumption like (5.10). In $\boldsymbol{H}_0(\mathbf{curl},\Omega)$ endowed with the scalar product $(\cdot|\cdot)_{\varepsilon,b\,\mathbf{curl}}$, the following orthogonal decomposition holds:*

$$\boldsymbol{H}_0(\mathbf{curl},\Omega) = \boldsymbol{H}_0(\mathbf{curl}\,0,\Omega) \overset{\perp_{\varepsilon,b}}{\oplus} \{\boldsymbol{f} \in \boldsymbol{K}_N(\Omega;\mathbb{c}) \ : \ P_{\boldsymbol{Z}_N^\varepsilon}\boldsymbol{f} = 0\}. \tag{6.17}$$

In addition, $\|\mathbb{b}^{1/2}\,\mathbf{curl}\,\cdot\|$ is a norm on the orthogonal vector subspace of $\boldsymbol{H}_0(\mathbf{curl}\,0,\Omega)$, which is equivalent to the full norm.

Proof. As it is obvious that

$$\boldsymbol{K}_N(\Omega;\mathfrak{c}) = \mathbf{grad}[Q_N(\Omega;\mathfrak{c})] \overset{\perp_{\varepsilon,b}}{\oplus} \{\boldsymbol{f} \in \boldsymbol{K}_N(\Omega;\mathfrak{c}) \ : \ P_{\boldsymbol{Z}_N^\varepsilon}\boldsymbol{f} = 0\},$$

the orthogonal decomposition (6.17) follows from the fact that $\boldsymbol{H}_0(\mathbf{curl}\,0,\Omega)$ is equal to $\mathbf{grad}[H_0^1(\Omega)] \oplus \mathbf{grad}[Q_N(\Omega;\mathfrak{c})]$. ■

Therefore, we can split the solution $\boldsymbol{E}$ to (6.7) as

$$\boldsymbol{E} = \mathbf{grad}\,\phi + \boldsymbol{E}_\perp,\ \phi \in H_0^1(\Omega) \oplus Q_N(\Omega;\mathfrak{c}),\ \boldsymbol{E}_\perp \in (\boldsymbol{H}_0(\mathbf{curl}\,0,\Omega))^\perp.$$

From the above, ϕ is characterized as the unique solution to (6.14).

As far as $\boldsymbol{E}_\perp$ is concerned, it is characterized by its curl: $\mathbf{curl}\,\boldsymbol{E}_\perp = \mathtt{f}$. Indeed, thanks to Theorem 6.1.4, the curl operator is surjective from $(\boldsymbol{H}_0(\mathbf{curl}\,0,\Omega))^\perp$ to $\boldsymbol{H}_0^\Sigma(\mathrm{div}\,0,\Omega)$. Expressed in variational form, it writes:

$$\begin{cases} \textit{Find } \boldsymbol{E}_\perp \in (\boldsymbol{H}_0(\mathbf{curl}\,0,\Omega))^\perp \textit{ such that} \\ \forall \boldsymbol{v} \in (\boldsymbol{H}_0(\mathbf{curl}\,0,\Omega))^\perp,\ (\mathbb{b}\,\mathbf{curl}\,\boldsymbol{E}_\perp|\,\mathbf{curl}\,\boldsymbol{v}) = (\mathbb{b}\mathtt{f}|\,\mathbf{curl}\,\boldsymbol{v}). \end{cases} \tag{6.18}$$

(See Proposition 6.1.10 for the equivalence of norms in $(\boldsymbol{H}_0(\mathbf{curl}\,0,\Omega))^\perp$.)

Remark 6.1.11 *It is important to be aware that one cannot build a single variational formulation that aggregates (6.14) and (6.18). On the other hand, for the Helmholtz-like problem, and for the second-order time-dependent problem in* $\boldsymbol{E}$*, this can be achieved. For the former, we refer to §8.3. For the latter, this is the so-called correction method [31, 32, 82]. Indeed, for these two problems, there is a zero-order term in the model, which yields an* $(\mathfrak{c}\cdot|\cdot)$ *contribution in the variational formulation.*

6.1.5 Electric energy matters

In the same spirit as Proposition 6.1.10, let us state an $\mathfrak{c}$-orthogonal decomposition of $\boldsymbol{L}^2(\Omega)$.

Proposition 6.1.12 *In* $\boldsymbol{L}^2(\Omega)$ *endowed with the scalar product* $(\mathfrak{c}\cdot|\cdot)$*, one has the orthogonal decomposition*

$$\boldsymbol{L}^2(\Omega) = \mathbf{grad}[H_0^1(\Omega)] \overset{\perp_\varepsilon}{\oplus} \mathbf{grad}[Q_N(\Omega;\mathfrak{c})] \overset{\perp_\varepsilon}{\oplus} \\ \{\boldsymbol{f} \in \boldsymbol{L}^2(\Omega) \ : \ \mathrm{div}\,\mathfrak{c}\boldsymbol{f} = 0,\ (\mathfrak{c}\boldsymbol{f}|\,\mathbf{grad}\,q_k^\varepsilon) = 0,\ 1 \le k \le K\}.$$

Furthermore, according to Theorem 3.6.1, given any element $\boldsymbol{f}$ of the latter set, there exists one, and only one, divergence-free element $\boldsymbol{w}$ of $\boldsymbol{H}(\mathbf{curl},\Omega) \cap \boldsymbol{H}_0(\mathrm{div},\Omega)$ with zero flux across the cuts, such that $\mathfrak{c}\boldsymbol{f} = \mathbf{curl}\,\boldsymbol{w}$ in Ω. In particular, one can apply this decomposition to the electric-like field. One finds that there exists a unique triple $(q, q^\varepsilon, \boldsymbol{w})$ such that

$$\boldsymbol{E} = \mathbf{grad}\,q + \mathbf{grad}\,q^\varepsilon + \mathfrak{c}^{-1}\,\mathbf{curl}\,\boldsymbol{w}$$

and, by orthogonality, the electric energy is equal to a sum of positive terms

$$(\mathfrak{c}\boldsymbol{E}|\boldsymbol{E}) = \|\mathfrak{c}^{1/2}\,\mathbf{grad}\,q\|^2 + \|\mathfrak{c}^{1/2}\,\mathbf{grad}\,q^\varepsilon\|^2 + \|\mathfrak{c}^{-1/2}\,\mathbf{curl}\,\boldsymbol{w}\|^2.$$

6.1.6 Regular-gradient splitting of electric fields

To conclude this study on electric-like fields, let us focus on another kind of splitting, which allows us to derive some *a priori* regularity results for those fields of $\boldsymbol{X}_{N,-s}(\Omega;\mathfrak{c})$, where $s \in [0,1]$. Here, we follow [80]. To begin with, it will be required at some point that we consider a piecewise regular tensor field $\mathfrak{c}$ in the sense below. We recall that partitions and jumps have been introduced in Definitions 2.1.48 and 2.1.67.

Definition 6.1.13 *Let $\mathfrak{k}$ be a tensor field that fulfills assumption (5.10). Then, $\mathfrak{k}$ fulfills the* coefficient assumption *if there exists a partition $\mathcal{P}$ of Ω such that $\mathfrak{k} \in P\mathbb{W}^{1,\infty}(\Omega,\mathcal{P})$.*

Remark 6.1.14 *If $\mathfrak{k}$ fulfills the coefficient assumption on a partition, then $\mathfrak{k}^{-1}$ fulfills the coefficient assumption on the same partition.*

Given a partition $\mathcal{P} := \{\Omega_j\}_{j=1,\cdots,J}$, define the interfaces $F_{jj'} := \partial\Omega_j \cap \partial\Omega_{j'}$ and $\mathcal{F}_{int} := \{F_{jj'},\ 1 \le j \ne j' \le J\}$; $F_j = \partial\Omega_j \cap \Gamma$ and $\mathcal{F}_{bdry} := \{F_j,\ 1 \le j \le J\}$; $\mathcal{F} := \mathcal{F}_{int} \cup \mathcal{F}_{bdry}$. By convention, if the Hausdorff dimension of $F_{jj'}$ (respectively F_j) is lower than 2, then $F_{jj'} = \emptyset$ (respectively $F_j = \emptyset$). Define further:

$$PH^{1/2}(\mathcal{F}') := \{g \in L^2(\mathcal{F}')\ :\ g_{|F} \in H^{1/2}(F),\ \forall F \in \mathcal{F}'\}, \quad \mathcal{F}' = \mathcal{F}_{int}, \mathcal{F}.$$

To proceed, one uses the fundamental splitting result for elements of $\boldsymbol{X}_N(\Omega)$, credited to Birman and Solomyak (see [49]). Let

$$\boldsymbol{X}_N^{reg}(\Omega) := \boldsymbol{X}_N(\Omega) \cap \boldsymbol{H}^1(\Omega).$$

Theorem 6.1.15 *Let Ω be a domain. There exists a continuous splitting operator acting from $\boldsymbol{X}_N(\Omega)$ to $\boldsymbol{X}_N^{reg}(\Omega) \times H_0^1(\Omega)$: given $\boldsymbol{v} \in \boldsymbol{X}_N(\Omega)$,*

$$\exists(\boldsymbol{v}_{reg}, q) \in \boldsymbol{X}_N^{reg}(\Omega) \times H_0^1(\Omega),\ \boldsymbol{v} = \boldsymbol{v}_{reg} + \mathbf{grad}\, q \text{ in } \Omega,$$

and one has

$$\|\boldsymbol{v}_{reg}\|_{\boldsymbol{H}^1(\Omega)} + \|q\|_{H^1(\Omega)} + \|\Delta q\| \le C\,\|\boldsymbol{v}\|_{\boldsymbol{X}_N(\Omega)}, \tag{6.19}$$

with a constant $C > 0$ that depends only on Ω.

The splitting result for electric-like fields then follows.

Theorem 6.1.16 *Let Ω be a domain such that* $\mathbf{(Top)}_{I=0}$ *or* $\mathbf{(Top)}_{I>0}$ *is fulfilled, and assume that $\mathfrak{c}$ is a tensor field that fulfills assumption (5.10). Given $s \in [0,1]$, there exists a continuous splitting operator acting from $\boldsymbol{X}_{N,-s}(\Omega,\mathfrak{c})$ to $\boldsymbol{X}_N^{reg}(\Omega) \times \boldsymbol{Z}_N(\Omega) \times H_0^1(\Omega)$. More precisely, given $\boldsymbol{v} \in \boldsymbol{X}_{N,-s}(\Omega,\mathfrak{c})$,*

$$\exists(\boldsymbol{v}_{reg}, \boldsymbol{z}, p_0) \in \boldsymbol{X}_N^{reg}(\Omega) \times \boldsymbol{Z}_N(\Omega) \times H_0^1(\Omega),$$
$$\boldsymbol{v} = \boldsymbol{v}_{reg} + \boldsymbol{z} + \mathbf{grad}\, p_0 \text{ in } \Omega. \tag{6.20}$$

If, in addition, $\mathfrak{c}$ fulfills the coefficient assumption on a partition $\mathcal{P}$, then the scalar field p_0 is governed by the variational formulation below, for some $f \in H^{-s}(\Omega)$ and $g_{\mathcal{F}} \in PH^{1/2}(\mathcal{F}_{int})$:

$$\begin{cases} \text{Find } p_0 \in H_0^1(\Omega) \text{ such that} \\ \forall \psi \in H_0^1(\Omega),\ (\mathfrak{c}\,\mathbf{grad}\, p_0 \mid \mathbf{grad}\,\psi) = -(\mathfrak{c}\boldsymbol{z} \mid \mathbf{grad}\,\psi) \\ \qquad\qquad\qquad\qquad + \langle f, \psi\rangle_{H_0^s(\Omega)} + (g_{\mathcal{F}}, \psi)_{L^2(\mathcal{F}_{int})}\,; \end{cases} \tag{6.21}$$

and one has

$$\begin{cases} \|\boldsymbol{v}_{reg}\|_{\boldsymbol{H}^1(\Omega)} + \|\boldsymbol{v}_{reg}\|_{\boldsymbol{X}_N(\Omega)} + \|\boldsymbol{z}\|_{\boldsymbol{H}^{1/2}(\Omega)} \leq C\,\|\boldsymbol{v}\|_{\boldsymbol{H}(\mathbf{curl},\Omega)}, \\ \|\mathfrak{c}\boldsymbol{z}\|_{\boldsymbol{P}\boldsymbol{H}^{1/2}(\Omega,\mathcal{P})} + \|f\|_{H^{-s}(\Omega)} \\ \qquad\qquad\qquad\qquad + \|g_{\mathcal{F}}\|_{PH^{1/2}(\mathcal{F}_{int})} \leq C_{\mathfrak{c}}\,\|\boldsymbol{v}\|_{\boldsymbol{X}_{N,-s}(\Omega,\mathfrak{c})}, \end{cases} \tag{6.22}$$

with a constant $C > 0$ that depends only on Ω, respectively a constant $C_{\mathfrak{c}} > 0$ that depends on Ω and $\mathfrak{c}$.

Remark 6.1.17 *In the splitting (6.20) of $\boldsymbol{v} \in \boldsymbol{X}_{N,-s}(\Omega,\mathfrak{c})$, all three terms $\boldsymbol{v}_{reg}, \boldsymbol{z}, \mathbf{grad}\, p_0$ have vanishing tangential components on the boundary Γ. Regarding regularity in (6.20), one has $\boldsymbol{v}_{reg} \in \boldsymbol{H}^1(\Omega)$, $\boldsymbol{z} = \mathbf{grad}\, p_z \in \boldsymbol{H}^{1/2}(\Omega)$ with $p_z \in H^1(\Omega)$ (cf. Theorem 3.3.15) and $\mathbf{grad}\, p_0 \in \boldsymbol{L}^2(\Omega)$. This result can be improved when $\mathfrak{c}$ fulfills the coefficient assumption (see Corollary 6.1.19 below).*

Proof. Let $\boldsymbol{y} = \mathbf{curl}\,\boldsymbol{v} \in \boldsymbol{H}_0(\mathrm{div},\Omega)$. By construction, $\mathrm{div}\,\boldsymbol{y} = 0$ in Ω, and one knows that $\langle \boldsymbol{y}\cdot\boldsymbol{n}, 1\rangle_{\Sigma_i} = 0$ for all i (cf. Remark 3.5.2). According to Theorem 3.5.1 on vector potentials, there exists $\boldsymbol{w} \in \boldsymbol{X}_N(\Omega)$ with $\mathrm{div}\,\boldsymbol{w} = 0$ in Ω, $\langle \boldsymbol{w}\cdot\boldsymbol{n}, 1\rangle_{H^{1/2}(\Gamma_k)} = 0$ for all k, such that $\boldsymbol{y} = \mathbf{curl}\,\boldsymbol{w}$ in Ω and $\|\boldsymbol{w}\|_{\boldsymbol{X}_N(\Omega)} \leq C\,\|\boldsymbol{y}\|$. Next, we know that there exists a Birman-Solomyak splitting of $\boldsymbol{w}$ (see Theorem 6.1.15):

$$\exists \boldsymbol{v}_{reg} \in \boldsymbol{X}_N^{reg}(\Omega),\ \exists q \in H_0^1(\Omega),\ \boldsymbol{w} = \boldsymbol{v}_{reg} + \mathbf{grad}\, q \text{ in } \Omega,$$

with continuous dependence (6.19). By construction, $\mathbf{curl}(\boldsymbol{v} - \boldsymbol{v}_{reg}) = 0$ in Ω, with $(\boldsymbol{v} - \boldsymbol{v}_{reg}) \in \boldsymbol{H}_0(\mathbf{curl},\Omega)$. According to Theorem 3.3.9 on scalar potentials, there exists $p \in H^1_{\partial\Omega}(\Omega)$ such that $\boldsymbol{v} = \boldsymbol{v}_{reg} + \mathbf{grad}\, p$ in Ω. Using the definition of the space of scalar potentials $Q_N(\Omega)$, one may further split p as $p = p_0 + p_z$ in Ω, with $p_0 \in H_0^1(\Omega)$, and $p_z \in Q_N(\Omega)$. Finally, introducing $\boldsymbol{z} = \mathbf{grad}\, p_z \in \boldsymbol{Z}_N(\Omega)$, we have proved that it holds that

$$\boldsymbol{v} = \boldsymbol{v}_{reg} + \boldsymbol{z} + \mathbf{grad}\, p_0 \text{ in } \Omega,$$

with $\boldsymbol{v}_{reg} \in \boldsymbol{X}_N^{reg}(\Omega)$, $\boldsymbol{z} \in \boldsymbol{Z}_N(\Omega)$, $p_0 \in H_0^1(\Omega)$, which is precisely (6.20).
Let us proceed with the definition of p_0 as the solution to (6.21) when $\mathfrak{c}$ fulfills the coefficient assumption. Let $\psi \in H_0^1(\Omega)$; then,

$$(\mathfrak{c}\,\mathbf{grad}\, p_0 \mid \mathbf{grad}\,\psi) = -(\mathfrak{c}\boldsymbol{z} \mid \mathbf{grad}\,\psi) + (\mathfrak{c}\boldsymbol{v} \mid \mathbf{grad}\,\psi) - (\mathfrak{c}\boldsymbol{v}_{reg} \mid \mathbf{grad}\,\psi).$$

Below, we study the last two terms separately.
Consider first $\boldsymbol{v} \in \boldsymbol{X}_{N,-s}(\Omega, \mathbb{c})$. One has, in particular, $\operatorname{div} \mathbb{c}\boldsymbol{v} \in H^{-s}(\Omega)$ and $\psi \in H_0^s(\Omega)$, so one gets

$$(\mathbb{c}\boldsymbol{v} \mid \mathbf{grad}\, \psi) = -\langle \operatorname{div} \mathbb{c}\boldsymbol{v}, \psi \rangle_{H_0^s(\Omega)}.$$

Next, consider $\boldsymbol{v}_{reg} \in \boldsymbol{X}_N^{reg}(\Omega)$. If $\mathbb{c}$ is only piecewise smooth([5]) on Ω, $\mathbb{c}\boldsymbol{v}_{reg} \cdot \boldsymbol{n}$ has jumps across faces of $\mathcal{F}_{int}$. On the other hand, one has $\mathbb{c}_j \boldsymbol{v}_{reg,j} \in \boldsymbol{H}^1(\Omega_j)$ for all j. Therefore, one can integrate by parts over each subdomain to find

$$\begin{aligned} -(\mathbb{c}\boldsymbol{v}_{reg} \mid \mathbf{grad}\, \psi) &= -\sum_j (\mathbb{c}_j \boldsymbol{v}_{reg,j}, \mathbf{grad}\, \psi_j)_{L^2(\Omega_j)} \\ &= \sum_j (\operatorname{div} \mathbb{c}_j \boldsymbol{v}_{reg,j}, \psi_j)_{L^2(\Omega_j)} - \sum_{F \in \mathcal{F}_{int}} ([\mathbb{c}\boldsymbol{v}_{reg} \cdot \boldsymbol{n}], \psi)_{L^2(F)} \\ &= (\widetilde{\operatorname{div} \mathbb{c}\boldsymbol{v}_{reg}} | \psi) - \sum_{F \in \mathcal{F}_{int}} ([\mathbb{c}\boldsymbol{v}_{reg} \cdot \boldsymbol{n}], \psi)_{L^2(F)}. \end{aligned}$$

Here, $\widetilde{\ }$ denotes the continuation by zero from $\prod_j L^2(\Omega_j)$ to $L^2(\Omega)$. If we introduce

$$f = -\operatorname{div} \mathbb{c}\boldsymbol{v} + \widetilde{\operatorname{div} \mathbb{c}\boldsymbol{v}_{reg}} \in H^{-s}(\Omega), \quad g_{\mathcal{F}} = -[\mathbb{c}\boldsymbol{v}_{reg} \cdot \boldsymbol{n}] \in PH^{1/2}(\mathcal{F}_{int}),$$

we obtain that p_0 is governed by (6.21).
Next, we derive the (uniform) estimates (6.22) to prove that the splitting operator is continuous. By construction,

$$\begin{cases} \|\boldsymbol{v}_{reg}\|_{\boldsymbol{H}^1(\Omega)} \le C_1 \|\boldsymbol{w}\|_{\boldsymbol{X}_N(\Omega)} \le C_2 \|\boldsymbol{y}\| \le C_2 \|\boldsymbol{v}\|_{\boldsymbol{H}(\mathbf{curl},\Omega)}\,; \\ \|\boldsymbol{v}_{reg}\|_{\boldsymbol{X}_N(\Omega)} \le \|\boldsymbol{w}\|_{\boldsymbol{X}_N(\Omega)} + \|\mathbf{grad}\, q\|_{\boldsymbol{X}_N(\Omega)} \le C_3 \|\boldsymbol{w}\|_{\boldsymbol{X}_N(\Omega)} \le C_3 \|\boldsymbol{v}\|_{\boldsymbol{H}(\mathbf{curl},\Omega)}. \end{cases}$$

For instance, $\boldsymbol{z} \in \boldsymbol{Z}_N(\Omega)$ can be measured by the ℓ_1-norm of the fluxes:

$$\begin{aligned} |\langle \boldsymbol{z} \cdot \boldsymbol{n}, 1 \rangle_{H^{1/2}(\Gamma_k)}| &= |\langle \boldsymbol{z} \cdot \boldsymbol{n}, q_k \rangle_{H^{1/2}(\Gamma)}| = |(\boldsymbol{z} \mid \mathbf{grad}\, q_k)| \\ &= |(\boldsymbol{z} + \mathbf{grad}\, p_0 \mid \mathbf{grad}\, q_k)| = |(\boldsymbol{v} - \boldsymbol{v}_{reg} \mid \mathbf{grad}\, q_k)| \\ &\le (\|\boldsymbol{v}\| + \|\boldsymbol{v}_{reg}\|) \|\mathbf{grad}\, q_k\| \le C \|\boldsymbol{v}\|_{\boldsymbol{H}(\mathbf{curl},\Omega)}. \end{aligned}$$

Above, we first used the definition of $(q_k)_{1 \le k \le K}$ given in §3.3, and then the fact that $\mathbf{grad}\, p_0$ and $\mathbf{grad}\, q_k$ are orthogonal with respect to $(\cdot|\cdot)$ (integrate by parts).
For a given j, one has $\|\mathbb{c}\boldsymbol{z}\|_{\boldsymbol{H}^{1/2}(\Omega_j)} \le C_1 \|\boldsymbol{v}\|_{\boldsymbol{H}(\mathbf{curl},\Omega)}$.
Next, regarding f and $g_{\mathcal{F}}$,

$$\begin{aligned} \|f\|_{H^{-s}(\Omega)} &\le \|\operatorname{div} \mathbb{c}\boldsymbol{v}\|_{H^{-s}(\Omega)} + \|\widetilde{\operatorname{div} \mathbb{c}\boldsymbol{v}_{reg}}\|_{H^{-s}(\Omega)} \\ &\le \|\operatorname{div} \mathbb{c}\boldsymbol{v}\|_{H^{-s}(\Omega)} + \|\widetilde{\operatorname{div} \mathbb{c}\boldsymbol{v}_{reg}}\| \end{aligned}$$

[5] If $\mathbb{c}$ is globally smooth on Ω, the partition is trivial, so $\mathcal{P} = \{\Omega\}$ and $\mathcal{F}_{int} = \emptyset$: $-(\mathbb{c}\boldsymbol{v}_{reg} \mid \mathbf{grad}\, \psi) = (\operatorname{div} \mathbb{c}\boldsymbol{v}_{reg} | \psi)$.

$$\leq C_2\Big(\|\operatorname{div}\mathfrak{c}\boldsymbol{v}\|_{H^{-s}(\Omega)} + \sum_j \|\operatorname{div}\mathfrak{c}\boldsymbol{v}_{reg}\|_{L^2(\Omega_j)}\Big)$$
$$\leq C_3\,\|\boldsymbol{v}\|_{\boldsymbol{X}_{N,-s}(\Omega,\mathfrak{c})}.$$

And for a given $F = \partial\Omega_j \cap \partial\Omega_{j'} \in \mathcal{F}_{int}$, we find, thanks to the continuity of the trace mapping,

$$\|g_{\mathcal{F}}\|_{H^{1/2}(F)} = \|[\mathfrak{c}\boldsymbol{v}_{reg}\cdot\boldsymbol{n}]\|_{H^{1/2}(F)} \leq \|[\mathfrak{c}\boldsymbol{v}_{reg}]\|_{\boldsymbol{H}^{1/2}(F)}$$
$$\leq C_4 \sum_{\beta=j,j'} \|\mathfrak{c}\boldsymbol{v}_{reg}\|_{\boldsymbol{H}^1(\Omega_\beta)} \leq C_5\,\|\boldsymbol{v}\|_{\boldsymbol{X}_{N,-s}(\Omega,\mathfrak{c})}.$$

In the last three bounds, respectively, on $\mathfrak{c}\boldsymbol{z}$, f, $g_{\mathcal{F}}$, the constants $C_1,\ C_3,\ C_5$ depend on $\|\mathfrak{c}\|_{P\mathbb{W}^{1,\infty}(\Omega,\mathcal{P})}$. ■

To carry on, one needs regularity results regarding $\mathbf{grad}\,p_0$, where p_0 is governed by the variational formulation (6.21). For that, we use an abstract shift theorem, proven in [53], that deals with second-order elliptic PDEs complemented with Dirichlet boundary conditions. This result provides a *lower bound* on the *a priori* regularity of $\mathbf{grad}\,p_0$ when $\mathfrak{c}$ fulfills the coefficient assumption ([6]).

Theorem 6.1.18 *Let Ω be a domain, and assume that $\mathfrak{c}$ fulfills the coefficient assumption. There exists $\tau_{Dir} \in]0,1/2[$ depending only on the geometry and the coefficient $\mathfrak{c}$ such that, for all $t \in [0,\tau_{Dir}[$ and for all $\ell \in H^{t-1}(\Omega)$, the solution to*

$$\begin{cases} \text{Find } u \in H^1_0(\Omega) \text{ such that} \\ (\mathfrak{c}\,\mathbf{grad}\,u \mid \mathbf{grad}\,\psi) = \langle \ell, \psi\rangle_{H^1_0(\Omega)},\ \forall \psi \in H^1_0(\Omega), \end{cases}$$

belongs to $H^{t+1}(\Omega)$, and moreover, $\|u\|_{H^{t+1}(\Omega)} \leq C_{t,\mathfrak{c}}\,\|\ell\|_{H^{t-1}(\Omega)}$ with a constant $C_{t,\mathfrak{c}} > 0$ that depends only on Ω, $\mathfrak{c}$ and t.

Combining the two theorems yields the result regarding the regular/gradient splitting of elements of $\boldsymbol{X}_{N,-s}(\Omega,\mathfrak{c})$.

Corollary 6.1.19 *Let Ω be a domain such that* **(Top)**$_{I=0}$ *or* **(Top)**$_{I>0}$ *is fulfilled, and assume that $\mathfrak{c}$ fulfills the coefficient assumption on a partition $\mathcal{P}$. Given $s \in]1-\tau_{Dir},1]$, it holds that*

$$\boldsymbol{X}_{N,-s}(\Omega,\mathfrak{c}) \subset \boldsymbol{X}_N^{reg}(\Omega) + \mathbf{grad}[H^{2-s}(\Omega) \cap H^1_{\partial\Omega}(\Omega)].$$

Proof. Let $\boldsymbol{v} \in \boldsymbol{X}_{N,-s}(\Omega,\mathfrak{c})$; we apply the splitting (6.20), namely

$$\exists(\boldsymbol{v}_{reg},\boldsymbol{z},p_0) \in \boldsymbol{X}_N^{reg}(\Omega) \times \boldsymbol{Z}_N(\Omega) \times H^1_0(\Omega),\ \boldsymbol{v} = \boldsymbol{v}_{reg} + \boldsymbol{z} + \mathbf{grad}\,p_0 \text{ in } \Omega,$$

where p_0 is governed by (6.21), with the uniform bounds (6.22). Hence, $\|\boldsymbol{v}_{reg}\|_{\boldsymbol{H}^1(\Omega)} \leq C\,\|\boldsymbol{v}\|_{\boldsymbol{X}_{N,-s}(\Omega,\mathfrak{c})}$. Furthermore, thanks to Theorem 3.3.15, one

[6] In some configurations, it can happen that the limit exponent τ_{Dir} is larger than 1/2. Here, we are only interested in the existence of such an exponent.

can write $\boldsymbol{z} = \mathbf{grad}\, p_z$, with $p_z \in H^{3/2}(\Omega) \cap H^1_{\partial\Omega}(\Omega) \subset H^{2-s}(\Omega) \cap H^1_{\partial\Omega}(\Omega)$, so it holds that $\|p_z\|_{H^{2-s}(\Omega)} \leq C\, \|\boldsymbol{v}\|_{\boldsymbol{X}_{N,-s}(\Omega,\mathbb{e})}$. Then, p_0 is characterized by (6.21), with a right-hand side

$$\ell \ : \ \psi \mapsto -(\mathbb{e}\boldsymbol{z} \mid \mathbf{grad}\, \psi) + \langle f, \psi \rangle_{H^s_0(\Omega)} + (g_{\mathcal{F}}, \psi)_{L^2(\mathcal{F}_{int})}$$

that belongs to $(H^s_0(\Omega))' = H^{-s}(\Omega)$. Indeed, if $\psi \in H^s_0(\Omega)$, then:

- $\mathbf{grad}\, \psi \in \boldsymbol{H}^{s-1}(\Omega) = (\boldsymbol{H}^{1-s}(\Omega))'$ (recall that $1-s \in [0, 1/2[$), and moreover, $\mathbb{e}\boldsymbol{z} \in \boldsymbol{P}\boldsymbol{H}^{1/2}(\Omega, \mathcal{P}) \subset \boldsymbol{H}^{1-s}(\Omega)$, so one may write the first term as $-\langle \mathbb{e}\boldsymbol{z}, \mathbf{grad}\, \psi \rangle_{\boldsymbol{H}^{s-1}(\Omega)} = \langle \operatorname{div} \mathbb{e}\boldsymbol{z}, \psi \rangle_{H^s_0(\Omega)}$;
- for all $F \in \mathcal{F}_{int}$, $\psi_{|F} \in L^2(F)$ with $\|\psi\|_{L^2(F)} \leq C\, \|\psi\|_{H^s(\Omega)}$ according to the trace Theorem 2.1.62.

Hence, according to the shift Theorem 6.1.18 with $t = 1-s$, it follows that $p_0 \in H^{2-s}(\Omega)$, with continuous dependence. So, we get

$$\begin{aligned} \|p_0\|_{H^{2-s}(\Omega)} &\leq C_1\, \|\ell\|_{H^{-s}(\Omega)} \\ &\leq C_2 \left(\|\mathbb{e}\boldsymbol{z}\|_{\boldsymbol{P}\boldsymbol{H}^{1/2}(\Omega,\mathcal{P})} + \|f\| + \|g_{\mathcal{F}}\|_{L^2(\mathcal{F}_{int})} \right) \\ &\leq C_3\, \|\boldsymbol{v}\|_{\boldsymbol{X}_{N,-s}(\Omega,\mathbb{e})}. \end{aligned}$$

This proves the claim. ■

6.2 Magnetostatic problem

For the static models, recall that our starting point is Eqs. (1.104), whose solutions are the static fields $\boldsymbol{B}^{stat}$ and $\boldsymbol{E}^{stat}$. In this subsection, we again consider a more general systems of equations, allowing the divergence of $\boldsymbol{B}^{stat}$ to be non-zero. We omit the ^{stat} here. The framework is similar to the one in §6.1. For this reason, some proofs are only sketched.

6.2.1 Definitions and results for the magnetostatic problem

The magnetostatic-like problem that we consider is governed by

$$\begin{cases} \textit{Find } \boldsymbol{H} \in \boldsymbol{L}^2(\Omega) \textit{ such that:} \\ \mathbf{curl}\, \boldsymbol{H} = \mathtt{f} \text{ in } \Omega, \\ \operatorname{div} \mathbb{\mu}\boldsymbol{H} = \mathtt{g} \text{ in } \Omega, \\ \mathbb{\mu}\boldsymbol{H} \cdot \boldsymbol{n} = 0 \text{ on } \Gamma, \end{cases} \tag{6.23}$$

with $(\mathtt{f}, \mathtt{g}) \in \boldsymbol{L}^2(\Omega) \times L^2(\Omega)$. The *a priori* regularity requirement on $\mathtt{f}$ stems from our initial modelling assumption, namely that $\boldsymbol{H} \in \boldsymbol{H}(\mathbf{curl}, \Omega)$. The magnetostatic field is subject to vanishing normal trace on the boundary, so it is natural to include this property in the model. On the other hand, the fact that $\mathtt{g}$ belongs to $L^2(\Omega)$ guarantees that $\gamma_n(\mathbb{\mu}\boldsymbol{H})$ has a meaning (see §6.3

for a discussion).

Next, let us characterize curl-free and divergence(μ)-free fields, with vanishing normal trace. Let

$$\boldsymbol{Z}_T(\Omega;\mathbb{\mu}) := \boldsymbol{H}(\mathbf{curl}\,0,\Omega)\cap \boldsymbol{H}_0(\mathrm{div}\,\mathbb{\mu}0,\Omega),$$
$$Q_T(\dot{\Omega};\mathbb{\mu}) := \{\dot{q}^\mu \in P_{zmv}(\dot{\Omega})\ :\ \mathrm{div}\,\mathbb{\mu}\widetilde{\mathbf{grad}\,\dot{q}^\mu} = 0 \text{ in } \Omega,\ \mathbb{\mu}\widetilde{\mathbf{grad}\,\dot{q}^\mu}\cdot\boldsymbol{n} = 0 \text{ on } \Gamma\}.$$

(See §3.3 for the definition of $P_{zmv}(\dot{\Omega})$.)

Proposition 6.2.1 *The dimension of the vector space $\boldsymbol{Z}_T(\Omega;\mathbb{\mu})$ is equal to I. Furthermore, an element $\boldsymbol{z}$ of $\boldsymbol{Z}_T(\Omega;\mathbb{\mu})$ can be characterized by its fluxes $(\langle\mathbb{\mu}\boldsymbol{z}\cdot\boldsymbol{n},1\rangle_{\Sigma_i})_{1\le i\le I}$. Finally, a basis of $\boldsymbol{Z}_T(\Omega;\mathbb{\mu})$ is the set of functions $(\widetilde{\mathbf{grad}\,\dot{q}_j^\mu})_{1\le j\le I}$, where each $\dot{q}_j^\mu \in Q_T(\dot{\Omega};\mathbb{\mu})$ is such that $[\dot{q}_j^\mu]_{\Sigma_i} = \delta_{ij}$, $\forall i$; $(\dot{q}_j^\mu)_{1\le j\le I}$ are real-valued functions.*

Remark 6.2.2 *The semi-norm $\|\mathbb{\mu}^{1/2}\,\mathbf{grad}\,\cdot\|_{\boldsymbol{L}^2(\dot{\Omega})}$ is a norm on $Q_T(\dot{\Omega};\mathbb{\mu})$, which is equivalent to the $H^1(\dot{\Omega})$-norm according to the Poincaré-Wirtinger inequality (see Theorem 2.1.37).*

Proof. Given $\dot{q}\in Q_T(\dot{\Omega};\mathbb{\mu})$, $\widetilde{\mathbf{grad}\,\dot{q}}$ belongs to $\boldsymbol{Z}_T(\Omega;\mathbb{\mu})$. Conversely, given $\boldsymbol{z}\in\boldsymbol{Z}_T(\Omega;\mathbb{\mu})$, we find that there exists one, and only one, $\dot{p}\in P_{zmv}(\dot{\Omega})$ such that $\boldsymbol{z} = \widetilde{\mathbf{grad}\,\dot{p}}$ according to Theorem 3.3.2 (extraction of scalar potentials): clearly, it belongs to $Q_T(\dot{\Omega};\mathbb{\mu})$. Thus, we have $\boldsymbol{Z}_T(\Omega;\mathbb{\mu}) = \widetilde{\mathbf{grad}}[Q_T(\dot{\Omega};\mathbb{\mu})]$. Next, let us check that the dimension of $\boldsymbol{Z}_T(\Omega;\mathbb{\mu})$ is equal to I by building a basis of $Q_T(\dot{\Omega};\mathbb{\mu})$. In the same spirit as Propositions 3.3.12 and 3.3.13, we define functions $(\dot{p}_{j'}^\mu)_{j'}$ as the solutions to the variational formulations $(1\le j'\le I)$:

$$\begin{cases} \textit{Find } \dot{p}_{j'}^\mu \in P_{zmv}(\dot{\Omega}) \textit{ such that} \\ \forall \dot{q}\in P_{zmv}(\dot{\Omega}),\quad (\mathbb{\mu}\,\mathbf{grad}\,\dot{p}_{j'}^\mu, \mathbf{grad}\,\dot{q})_{\boldsymbol{L}^2(\dot{\Omega})} = [\overline{\dot{q}}]_{\Sigma_{j'}}\,. \end{cases}$$

One can check that $\dot{p}_{j'}^\mu$ belongs to $Q_T(\dot{\Omega};\mathbb{\mu})$, and in addition, $\langle\mathbb{\mu}\partial_n\dot{p}_{j'}^\mu,1\rangle_{\Sigma_i} = \delta_{ij'}$, $\forall i$. According to this last property, the family $(\dot{p}_{j'}^\mu)_{j'}$ is free in $Q_T(\dot{\Omega};\mathbb{\mu})$. Let $\dot{q}\in Q_T(\dot{\Omega};\mathbb{\mu})$ and define $\dot{q}' := \dot{q} - \sum_{j'}\langle\mathbb{\mu}\partial_n\dot{q},1\rangle_{\Sigma_{j'}}\dot{p}_{j'}^\mu$, so that $\langle\mathbb{\mu}\partial_n\dot{q}',1\rangle_{\Sigma_i} = 0$, $\forall i$. Integrating by parts in $\dot{\Omega}$ (3.6), we find[7]

$$\begin{aligned}\|\mathbb{\mu}^{1/2}\widetilde{\mathbf{grad}\,\dot{q}'}\|^2 &= (\mathbb{\mu}\,\mathbf{grad}\,\dot{q}',\mathbf{grad}\,\dot{q}')_{\boldsymbol{L}^2(\dot{\Omega})} \\ &= \sum_i \langle\mathbb{\mu}\frac{\partial\dot{q}'}{\partial n},[\dot{q}']_{\Sigma_i}\rangle_{\Sigma_i} = \sum_i\langle\mathbb{\mu}\frac{\partial\dot{q}'}{\partial n},1\rangle_{\Sigma_i}\,[\overline{\dot{q}'}]_{\Sigma_i} = 0.\end{aligned}$$

[7] Thanks to the definition of the jumps (Definition 2.1.67), the brackets always come with a plus sign.

It follows that $\dot{q}' = 0$ in $\dot{\Omega}$, so $(\dot{p}^{\mu}_{j'})_{j'}$ is a basis of $Q_T(\dot{\Omega};\mathbb{\mu})$. We infer that the dimension of $\boldsymbol{Z}_T(\Omega;\mathbb{\mu})$ is equal to I. In addition, we note that an element $\boldsymbol{z}$ of $\boldsymbol{Z}_T(\Omega;\mathbb{\mu})$ can be characterized by its fluxes $(\langle \mathbb{\mu}\boldsymbol{z}\cdot\boldsymbol{n},1\rangle_{\Sigma_i})_{1\le i\le I}$.
Finally, we prove that we can build an alternate basis for $Q_T(\dot{\Omega};\mathbb{\mu})$, namely $(\dot{q}^{\mu}_j)_j$ such that $[\dot{q}^{\mu}_j]_{\Sigma_i} = \delta_{ij}$, $\forall i$. For that, we introduce the mapping

$$Jump \ : \ \begin{cases} Q_T(\dot{\Omega};\mathbb{\mu}) \to \mathbb{C}^I \\ \dot{q} \mapsto ([\dot{q}]_{\Sigma_i})_{1\le i\le I} \end{cases}$$

and prove that it is a bijection, by checking that its kernel is reduced to $\{0\}$. If we let $\dot{q} \in \ker(Jump)$, we compute simply that $\|\mathbb{\mu}^{1/2}\widetilde{\mathbf{grad}\,\dot{q}}\|^2 = 0$ (cf. the above integration by parts), so $\dot{q} = 0$, and the characterization by jumps is shown. To prove that $(\dot{q}^{\mu}_j)_j$ are real-valued functions, one checks successively (cf. Corollary 3.3.14) that the $(\dot{p}^{\mu}_{j'})_{j'}$ are real-valued, and then that the $(\dot{q}^{\mu}_j)_j$ are written as linear combinations of those fields with real coefficients. ■

All norms are equivalent on finite-dimensional vector spaces. As a consequence, we may use any norm like

$$\boldsymbol{z} \mapsto |(\langle \mathbb{\mu}\boldsymbol{z}\cdot\boldsymbol{n},1\rangle_{\Sigma_i})_{1\le i\le I}|_p\,, \text{ or } \boldsymbol{z} = \widetilde{\mathbf{grad}\,\dot{q}} \mapsto |([\dot{q}]_{\Sigma_i})_{1\le i\le I}|_p\,,$$

with $1 \le p \le \infty$, to measure elements of $\boldsymbol{Z}_T(\Omega;\mathbb{\mu})$. Evidently, any other norm would also be appropriate. From now on, we call $|\cdot|_{\boldsymbol{Z}^{\mu}_T}$ the chosen norm.

Remark 6.2.3 *Given $q \in H^1(\Omega)$ and $\dot{q}^{\mu} \in Q_T(\dot{\Omega};\mathbb{\mu})$, we find, by integrating by parts, using* (2.25) *or* (3.6)*,*

$$(\mathbb{\mu}\,\mathbf{grad}\,q|\widetilde{\mathbf{grad}\,\dot{q}^{\mu}}) = 0.$$

According to Remark 3.4.2, if $\boldsymbol{f} := \mathbf{curl}\,\boldsymbol{w}$ with $\boldsymbol{w} \in \boldsymbol{H}(\mathbf{curl},\Omega)$, one automatically has $\langle \boldsymbol{f}\cdot\boldsymbol{n},1\rangle_{H^{1/2}(\Gamma_k)} = 0$, $\forall k$. So, we look for right-hand sides $\mathtt{f}$ in

$$\boldsymbol{H}^{\Gamma}(\operatorname{div} 0,\Omega) := \{\boldsymbol{f} \in \boldsymbol{H}(\operatorname{div} 0,\Omega) \ : \ \langle \boldsymbol{f}\cdot\boldsymbol{n},1\rangle_{H^{1/2}(\Gamma_k)} = 0, \ \forall k\}.$$

On the other hand, if $g := \operatorname{div}\boldsymbol{w}$ with $\boldsymbol{w} \in \boldsymbol{H}_0(\operatorname{div},\Omega)$, one finds, by integration by parts, $(g|1) = 0$. So, we look for right-hand sides $\mathtt{g}$ in $L^2_{zmv}(\Omega)$.

Corollary 6.2.4 *Let Ω be a domain such that* $(\mathbf{Top})_{I=0}$ *or* $(\mathbf{Top})_{I>0}$ *is fulfilled. Then, given $g \in L^2_{zmv}(\Omega)$ and $\boldsymbol{f} \in \boldsymbol{H}^{\Gamma}(\operatorname{div} 0,\Omega)$, there exists $\boldsymbol{w} \in \boldsymbol{H}(\mathbf{curl},\Omega)$ such that*

$$\begin{aligned} &\mathbf{curl}\,\boldsymbol{w} = \boldsymbol{f}, \ \operatorname{div}\mathbb{\mu}\boldsymbol{w} = g, \ \mathbb{\mu}\boldsymbol{w}\cdot\boldsymbol{n}_{|\Gamma} = 0, \\ &\|\boldsymbol{w}\|_{\boldsymbol{H}(\mathbf{curl},\Omega)} \le C\,(\|\boldsymbol{f}\| + \|g\|), \end{aligned} \tag{6.24}$$

with $C > 0$.

Proof. Given $\boldsymbol{f}$, thanks to Theorem 3.6.1, there exists $\boldsymbol{y} \in \boldsymbol{H}(\mathbf{curl}, \Omega)$ such that $\boldsymbol{f} = \mathbf{curl}\, \boldsymbol{y}$ in Ω, with $\|\boldsymbol{y}\|_{\boldsymbol{H}(\mathbf{curl},\Omega)} \leq C_0 \|\boldsymbol{f}\|$ for some $C_0 > 0$.
Then, let us change the divergence(μ) of the potential together with its (μ)normal trace, without changing the curl. For that, we solve

$$\begin{cases} \textit{Find } z \in H^1_{zmv}(\Omega) \textit{ such that} \\ \forall z' \in H^1_{zmv}(\Omega),\ (\mu\, \mathbf{grad}\, z | \mathbf{grad}\, z') = (\mu \boldsymbol{y} | \mathbf{grad}\, z') + (g|z'). \end{cases}$$

Thanks to the assumptions about μ and with the help of the Poincaré-Wirtinger inequality of Theorem 2.1.37 in $H^1_{zmv}(\Omega)$, this problem has one, and only one, solution, and moreover, one has $\|z\|_{H^1(\Omega)} \leq C_1 \|\mu \boldsymbol{y}\| + \|g\|$, for some $C_1 > 0$, cf. the Lax-Milgram Theorem 4.2.8. Let us set $\boldsymbol{w} = \boldsymbol{y} - \mathbf{grad}\, z$. By construction, the potential $\boldsymbol{w} \in \boldsymbol{H}(\mathbf{curl}, \Omega)$ is such that $\boldsymbol{f} = \mathbf{curl}\, \boldsymbol{w}$ in $\boldsymbol{L}^2(\Omega)$, $\operatorname{div} \mu \boldsymbol{w} = g$ in $L^2(\Omega)$ and $\mu \boldsymbol{w} \cdot \boldsymbol{n}_{|\Gamma} = 0$ (for the last two properties, we use the fact that $(g|1) = 0$), with continuous dependence, as in (6.24). ■

We are now in a position to solve the magnetostatic problem, which yields a way to measure/characterize the magnetostatic field. Let us introduce the function space

$$\boldsymbol{X}_T(\Omega; \mu) := \boldsymbol{H}(\mathbf{curl}, \Omega) \cap \boldsymbol{H}_0(\operatorname{div} \mu, \Omega), \tag{6.25}$$

a priori endowed with the graph norm $\boldsymbol{f} \mapsto \left\{ \|\boldsymbol{f}\|^2 + \|\, \mathbf{curl}\, \boldsymbol{f}\|^2 + \|\operatorname{div} \mu \boldsymbol{f}\|^2 \right\}^{1/2}$.
One can easily check that it is a Hilbert space, endowed with the associated scalar product. Next, we define the orthogonal projection operator $P^0_{\boldsymbol{Z}^\mu_T}$ from $\boldsymbol{X}_T(\Omega; \mu)$ to $\boldsymbol{Z}_T(\Omega; \mu)$, with respect to the scalar product $(\cdot, \cdot)_{\boldsymbol{X}_T(\Omega;\mu)}$:

$$(\boldsymbol{v}, \boldsymbol{w}) \mapsto (\mu \boldsymbol{v} | \boldsymbol{w}) + (\mathbb{c}\, \mathbf{curl}\, \boldsymbol{v} |\, \mathbf{curl}\, \boldsymbol{w}) + (\operatorname{div} \mu \boldsymbol{v} | \operatorname{div} \mu \boldsymbol{w}), \tag{6.26}$$

where $\mathbb{c}$ is a tensor field that fulfills an assumption like (5.10). The associated norm is denoted by $\|\cdot\|_{\boldsymbol{X}_T(\Omega;\mu)}$; it is clearly equivalent to the graph norm.

Theorem 6.2.5 *Let Ω be a domain such that* $\mathbf{(Top)}_{I=0}$ *or* $\mathbf{(Top)}_{I>0}$ *is fulfilled. Then, the mapping*

$$Stat^0_H \ :\ \begin{cases} \boldsymbol{X}_T(\Omega; \mu) \to \boldsymbol{H}^\Gamma(\operatorname{div} 0, \Omega) \times L^2_{zmv}(\Omega) \\ \boldsymbol{w} \mapsto (\mathbf{curl}\, \boldsymbol{w}, \operatorname{div} \mu \boldsymbol{w}) \end{cases}$$

is surjective, and its kernel is equal to $\boldsymbol{Z}_T(\Omega; \mu)$.
As a consequence, one has a Weber inequality

$$\begin{aligned} &\exists C^0_H > 0,\ \forall \boldsymbol{w} \in \boldsymbol{X}_T(\Omega; \mu), \\ &\|\boldsymbol{w}\|_{\boldsymbol{X}_T(\Omega;\mu)} \leq C^0_H (\|\, \mathbf{curl}\, \boldsymbol{w}\| + \|\operatorname{div} \mu \boldsymbol{w}\| + |P^0_{\boldsymbol{Z}^\mu_T} \boldsymbol{w}|_{\boldsymbol{Z}^\mu_T}). \end{aligned} \tag{6.27}$$

Proof. The mapping $Stat^0_H$ is surjective, according to Corollary 6.2.4, and moreover, $\ker(Stat^0_H) = \boldsymbol{Z}_T(\Omega; \mu)$.
One then builds an orthogonal decomposition of $\boldsymbol{X}_T(\Omega; \mu)$:

$$\boldsymbol{X}_T(\Omega;\mathbb{\mu}) = \boldsymbol{Z}_T(\Omega;\mathbb{\mu}) \overset{\perp}{\oplus} (\boldsymbol{Z}_T(\Omega;\mathbb{\mu}))^{\perp},$$

with respect to the scalar product $(\cdot,\cdot)_{\boldsymbol{X}_T(\Omega;\mathbb{\mu})}$, and the proof is concluded as for Theorem 6.1.4, by choosing a vector potential in $(\boldsymbol{Z}_T(\Omega;\mathbb{\mu}))^{\perp}$. ■

Introducing the orthogonal projection operator $P_{\boldsymbol{Z}_T^{\mu}}$ from $\boldsymbol{H}(\mathbf{curl},\Omega)$ to $\boldsymbol{Z}_T(\Omega;\mathbb{\mu})$ with respect to the scalar product $(\cdot|\cdot)_{\mu,c\,\mathbf{curl}} : (\boldsymbol{v},\boldsymbol{w}) \mapsto (\mathbb{\mu}\boldsymbol{v}|\boldsymbol{w}) + (\mathbb{c}\,\mathbf{curl}\,\boldsymbol{v}|\,\mathbf{curl}\,\boldsymbol{w})$, with $\mathbb{c}$ as above, we find the result below.

Proposition 6.2.6 *Given $\boldsymbol{w} \in \boldsymbol{X}_T(\Omega;\mathbb{\mu})$, one has $P^0_{\boldsymbol{Z}_T^{\mu}}\boldsymbol{w} = P_{\boldsymbol{Z}_T^{\mu}}\boldsymbol{w}$.*

So far, we have solved the magnetostatic-like problem (6.23), cf. Theorem 6.2.5, and we have seen that, to achieve uniqueness, the value $P_{\boldsymbol{Z}_T^{\mu}}\boldsymbol{H}$ must be known. So, we complement (6.23) with $P_{\boldsymbol{Z}_T^{\mu}}\boldsymbol{H} = \mathtt{h}$, for some data $\mathtt{h} \in \boldsymbol{Z}_T(\Omega;\mathbb{\mu})$. Hence, the "full" magnetostatic-like problem writes

$$\begin{cases} \textit{Find } \boldsymbol{H} \in \boldsymbol{L}^2(\Omega) \textit{ such that} \\ \mathbf{curl}\,\boldsymbol{H} = \mathtt{f} \text{ in } \Omega \\ \operatorname{div}\mathbb{\mu}\boldsymbol{H} = \mathtt{g} \text{ in } \Omega \\ P_{\boldsymbol{Z}_T^{\mu}}\boldsymbol{H} = \mathtt{h} \\ \mathbb{\mu}\boldsymbol{H}\cdot\boldsymbol{n} = 0 \text{ on } \Gamma, \end{cases} \tag{6.28}$$

with data $(\mathtt{f},\mathtt{g},\mathtt{h}) \in \boldsymbol{H}^{\Gamma}(\operatorname{div} 0,\Omega) \times L^2_{zmv}(\Omega) \times \boldsymbol{Z}_T(\Omega;\mathbb{\mu})$.

To solve this problem variationally, we again propose several approaches.

6.2.2 Solving the magnetostatic problem: mixed formulation

Note that given $q \in H^1(\Omega)$, one has $q-(q|1)/vol(\Omega) \in H^1_{zmv}(\Omega)$ with identical gradient. One can easily check that for $\boldsymbol{H} \in \boldsymbol{L}^2(\Omega)$, the equations $\operatorname{div}\mathbb{\mu}\boldsymbol{H} = \mathtt{g}$ in $L^2(\Omega)$, $\mathbb{\mu}\boldsymbol{H}\cdot\boldsymbol{n}_{|\Gamma} = 0$ and $P_{\boldsymbol{Z}_T^{\mu}}\boldsymbol{H} = \mathtt{h}$ can be reformulated equivalently as

$$\begin{cases} \forall (q,\boldsymbol{z}) \in H^1_{zmv}(\Omega) \times \boldsymbol{Z}_T(\Omega;\mathbb{\mu}), \\ (\mathbb{\mu}\boldsymbol{H}|\,\mathbf{grad}\,q + \boldsymbol{z}) = -(\mathtt{g}|q) + (\mathbb{\mu}\mathtt{h}|\boldsymbol{z}). \end{cases} \tag{6.29}$$

On the other hand, with $\mathbb{c}$ chosen as above, we find that the remaining conditions in (6.28) imply

$$\begin{cases} \boldsymbol{H} \in \boldsymbol{H}(\mathbf{curl},\Omega), \\ \forall \boldsymbol{v} \in \boldsymbol{H}(\mathbf{curl},\Omega),\ (\mathbb{c}\,\mathbf{curl}\,\boldsymbol{H}|\,\mathbf{curl}\,\boldsymbol{v}) = (\mathbb{c}\mathtt{f}|\,\mathbf{curl}\,\boldsymbol{v}). \end{cases} \tag{6.30}$$

Indeed, for any $\boldsymbol{H} \in \boldsymbol{H}(\mathbf{curl},\Omega)$, there exists $\boldsymbol{v} \in \boldsymbol{H}(\mathbf{curl},\Omega)$ such that $\mathbf{curl}\,\boldsymbol{v} = \mathbf{curl}\,\boldsymbol{H} - \mathtt{f}$ (Remark 3.4.2 and Corollary 6.2.4). Using $\boldsymbol{v}$ as a test function in (6.30), we obtain that $\|\mathbb{c}^{1/2}(\mathbf{curl}\,\boldsymbol{H} - \mathtt{f})\| = 0$. Consequently, the magnetostatic field $\boldsymbol{H}$ is a solution to (6.28) if, and only if, it is governed by (6.29)-(6.30).

To solve this variational formulation (6.29)-(6.30), we choose here the mixed framework (4.7), with a Lagrange multiplier. We set:

- $V_H = \boldsymbol{H}(\mathbf{curl}, \Omega)$; $Q_H = H^1_{zmv}(\Omega) \times \boldsymbol{Z}_T(\Omega; \mathbb{\mu})$;
- $a_H(\boldsymbol{v}, \boldsymbol{w}) = (\mathbb{c}\, \mathbf{curl}\, \boldsymbol{v} | \, \mathbf{curl}\, \boldsymbol{w})$; $b_H(\boldsymbol{v}, (q, \boldsymbol{z})) = (\mathbb{\mu} \boldsymbol{v} | \, \mathbf{grad}\, q + \boldsymbol{z})$;
- $\langle f_H, \boldsymbol{v} \rangle = (\mathbb{c}\mathtt{f} | \, \mathbf{curl}\, \boldsymbol{v})$; $\langle g_H, (q, \boldsymbol{z}) \rangle = -(\mathtt{g}|q) + (\mathbb{\mu}\mathtt{h}|\boldsymbol{z})$.

In V_H, we choose the norm $\| \cdot \|_{V_H}$, which is associated with the scalar product $(\cdot|\cdot)_{\mu, c\, \mathbf{curl}}$. In Q_H, we choose the norm $\|(q, \boldsymbol{z})\|_{Q_H} = (\|\mathbb{\mu}^{1/2}\, \mathbf{grad}\, q\|^2 + \|\mathbb{\mu}^{1/2} \boldsymbol{z}\|^2)^{1/2}$. By Remark 6.2.3, it holds that

$$\forall q \in H^1(\Omega), \forall \boldsymbol{z} \in \boldsymbol{Z}_T(\Omega; \mathbb{\mu}), \ (\mathbb{\mu}\, \mathbf{grad}\, q | \boldsymbol{z}) = 0. \tag{6.31}$$

Consequently, $\|(q, \boldsymbol{z})\|_{Q_H} = \|\mathbb{\mu}^{1/2}(\mathbf{grad}\, q + \boldsymbol{z})\|$, for all $(q, \boldsymbol{z}) \in Q_H$.
The resulting mixed variational formulation writes

$$\begin{cases} \textit{Find } (\widetilde{\boldsymbol{H}}, (p, \boldsymbol{y})) \in V_H \times Q_H \textit{ such that} \\ \forall \boldsymbol{v} \in V_H, \ a_H(\widetilde{\boldsymbol{H}}, \boldsymbol{v}) + \overline{b_H(\boldsymbol{v}, (p, \boldsymbol{y}))} = \langle f_H, \boldsymbol{v} \rangle, \\ \forall (q, \boldsymbol{z}) \in Q_H, \ b_H(\widetilde{\boldsymbol{H}}, (q, \boldsymbol{z})) = \langle g_H, (q, \boldsymbol{z}) \rangle. \end{cases} \tag{6.32}$$

Proposition 6.2.7 *The mixed variational formulation (6.32) is well-posed. In addition, the field $\widetilde{\boldsymbol{H}}$ is the solution to the magnetostatic-like problem (6.28).*

Proof. First, to prove that the formulation (6.32) is well-posed, we have to check that the assumptions of the Babuska-Brezzi Theorem 4.2.19 are fulfilled.
Inf-sup condition: given $(q, \boldsymbol{z}) \in Q_H \setminus \{0\}$, we let $\boldsymbol{v} = \mathbf{grad}\, q + \boldsymbol{z} \in \boldsymbol{H}(\mathbf{curl}, \Omega)$, with norm $\|\boldsymbol{v}\|_{V_H} = \|(q, \boldsymbol{z})\|_{Q_H}$. Also, one has $b_H(\boldsymbol{v}, (q, \boldsymbol{z})) = \|(q, \boldsymbol{z})\|^2_{Q_H}$. Hence, it follows that

$$\inf_{(q, \boldsymbol{z}) \in Q_H \setminus \{0\}} \ \sup_{\boldsymbol{v} \in V_H \setminus \{0\}} \frac{|b_H(\boldsymbol{v}, (q, \boldsymbol{z}))|}{\|\boldsymbol{v}\|_{V_H} \, \|(q, \boldsymbol{z})\|_{Q_H}} \geq 1.$$

Coercivity on the kernel: the kernel is defined by

$$K_H = \{\boldsymbol{v} \in V_H \ : \ b_H(\boldsymbol{v}, (q, \boldsymbol{z})) = 0, \ \forall (q, \boldsymbol{z}) \in Q_H\}.$$

One finds that $K_H = \{\boldsymbol{v} \in \boldsymbol{H}(\mathbf{curl}, \Omega) \cap \boldsymbol{H}_0(\mathrm{div}\, \mathbb{\mu} 0, \Omega) \ : \ P_{\boldsymbol{Z}^{\mu}_T} \boldsymbol{v} = 0\}$. According to the Weber inequality (6.27) and Proposition 6.2.6, the sesquilinear form a_H is coercive on $K_H \times K_H$, hence (6.32) is well-posed.
Finally, for (6.32) to be equivalent to (6.29)-(6.30), so that $\widetilde{\boldsymbol{H}} = \boldsymbol{H}$, we have to check that $(p, \boldsymbol{y})$ vanishes in (6.32). Due to the property (6.31), we obtain with the test function $\boldsymbol{v} = \mathbf{grad}\, p + \boldsymbol{y} \in \boldsymbol{H}(\mathbf{curl}, \Omega)$ in (6.32) that $\|(p, \boldsymbol{y})\|^2_{Q_H} = 0$, so $(p, \boldsymbol{y}) = (0, 0)$: the last part of the proposition follows. ■

6.2.3 Solving the magnetostatic problem: augmented formulation

If $\boldsymbol{H}$ is the solution to (6.28), then it belongs to $\boldsymbol{X}_T(\Omega; \mathbb{\mu})$. Furthermore, with the help of Proposition 6.2.6, if we add up all contributions, it implies that $\boldsymbol{H}$ is governed by the "augmented" variational formulation

$$\begin{cases} \textit{Find } \boldsymbol{H} \in \boldsymbol{X}_T(\Omega;\mathbb{\mu}) \textit{ such that} \\ \forall \boldsymbol{v} \in \boldsymbol{X}_T(\Omega;\mathbb{\mu}), \\ (\mathbb{c}\,\mathbf{curl}\,\boldsymbol{H}|\,\mathbf{curl}\,\boldsymbol{v}) + (\operatorname{div}\mathbb{\mu}\boldsymbol{H}|\operatorname{div}\mathbb{\mu}\boldsymbol{v}) + (\mathbb{\mu}P_{\boldsymbol{Z}_T^\mu}\boldsymbol{H}|P_{\boldsymbol{Z}_T^\mu}\boldsymbol{v}) \\ \quad = (\mathbb{c}\mathtt{f}|\,\mathbf{curl}\,\boldsymbol{v}) + (\mathtt{g}|\operatorname{div}\mathbb{\mu}\boldsymbol{v}) + (\mathbb{\mu}\mathtt{h}|P_{\boldsymbol{Z}_T^\mu}\boldsymbol{v}). \end{cases} \tag{6.33}$$

Reciprocally, if $\boldsymbol{H}$ is governed by (6.33), first, one finds, with test functions $\boldsymbol{v}$ in $\boldsymbol{Z}_T(\Omega;\mathbb{\mu})$, that $P_{\boldsymbol{Z}_T^\mu}\boldsymbol{H} = \mathtt{h}$. Second, one notices that, because the solution belongs *a priori* to $\boldsymbol{X}_T(\Omega;\mathbb{\mu})$, one has $\mathtt{g} - \operatorname{div}\mathbb{\mu}\boldsymbol{H} \in L^2_{zmv}(\Omega)$. Hence, by solving

$$\begin{cases} \textit{Find } q \in H^1_{zmv}(\Omega) \textit{ such that} \\ \forall q' \in H^1_{zmv}(\Omega),\ (\mathbb{\mu}\,\mathbf{grad}\,q|\,\mathbf{grad}\,q') = (\operatorname{div}\mathbb{\mu}\boldsymbol{H} - \mathtt{g}|q'), \end{cases}$$

we obtain that there exists one, and only one, scalar field q in $H^1_{zmv}(\Omega)$ such that $\operatorname{div}\mathbb{\mu}\,\mathbf{grad}\,q = \operatorname{div}\mathbb{\mu}\boldsymbol{H} - \mathtt{g}$, with $\mathbb{\mu}\partial_n q_{|\Gamma} = 0$. Therefore, $\mathbf{grad}\,q$ belongs to $\boldsymbol{X}_T(\Omega;\mathbb{\mu})$, and it can be used as a test function to yield $\|\mathtt{g} - \operatorname{div}\mathbb{\mu}\boldsymbol{H}\| = 0$. Third, one concludes that $\|\mathbb{c}^{1/2}(\mathbf{curl}\,\boldsymbol{H} - \mathtt{f})\| = 0$, as in the previous subsection.
To solve this augmented variational formulation (6.33), we choose the *classical framework* (4.3) in the same Hilbert space. So, we introduce:

- $\widetilde{V}_H = \boldsymbol{X}_T(\Omega;\mathbb{\mu})$;
- $\widetilde{a}_H(\boldsymbol{v},\boldsymbol{w}) = (\mathbb{c}\,\mathbf{curl}\,\boldsymbol{v}|\,\mathbf{curl}\,\boldsymbol{w}) + (\operatorname{div}\mathbb{\mu}\boldsymbol{v}|\operatorname{div}\mathbb{\mu}\boldsymbol{w}) + (\mathbb{\mu}P_{\boldsymbol{Z}_T^\mu}\boldsymbol{v}|P_{\boldsymbol{Z}_T^\mu}\boldsymbol{w})$;
- $\langle\widetilde{\boldsymbol{f}}_H,\boldsymbol{v}\rangle = (\mathbb{c}\mathtt{f}|\,\mathbf{curl}\,\boldsymbol{v}) + (\mathtt{g}|\operatorname{div}\mathbb{\mu}\boldsymbol{v}) + (\mathbb{\mu}\mathtt{h}|P_{\boldsymbol{Z}_T^\mu}\boldsymbol{v})$.

In $\widetilde{V}_H$, we choose the norm $\|\cdot\|_{\widetilde{V}_H} = \|\cdot\|_{\boldsymbol{X}_T(\Omega;\mathbb{\mu})}$.
The resulting augmented variational formulation writes

$$\begin{cases} \textit{Find } \widetilde{\boldsymbol{H}} \in \widetilde{V}_H \textit{ such that} \\ \forall \boldsymbol{v} \in \widetilde{V}_H,\ \widetilde{a}_H(\widetilde{\boldsymbol{H}},\boldsymbol{v}) = \langle\widetilde{\boldsymbol{f}}_H,\boldsymbol{v}\rangle. \end{cases} \tag{6.34}$$

We state below the equivalence result, whose proof is omitted.

Proposition 6.2.8 *The augmented variational formulation (6.34) is well-posed, and the field $\widetilde{\boldsymbol{H}}$ is the solution to the magnetostatic-like problem (6.28).*

6.2.4 Solving the magnetostatic problem: two-step formulation

What happens when one solves the actual magnetostatic problem? One has $\mathtt{g} = 0$, so that $\mathbb{\mu}\boldsymbol{H}$ is always divergence-free. According to Theorem 3.5.1 applied to $\mathbb{\mu}(\boldsymbol{H} - \mathtt{h})$, there exists one, and only one, field $\boldsymbol{A} \in \boldsymbol{H}_0(\mathbf{curl},\Omega) \cap \boldsymbol{H}^\Gamma(\operatorname{div}0,\Omega)$ such that $\mathbb{\mu}\boldsymbol{H} = \mathbf{curl}\,\boldsymbol{A} + \mathbb{\mu}\mathtt{h}$. The vector field $\boldsymbol{A}$ is called the magnetostatic potential, which can be characterized by

$$\begin{cases} \textit{Find } \boldsymbol{A} \in \boldsymbol{H}_0(\mathbf{curl},\Omega) \cap \boldsymbol{H}^\Gamma(\operatorname{div}0,\Omega) \textit{ such that} \\ \forall \boldsymbol{A}' \in \boldsymbol{H}_0(\mathbf{curl},\Omega) \cap \boldsymbol{H}^\Gamma(\operatorname{div}0,\Omega), \\ (\mathbb{\mu}^{-1}\,\mathbf{curl}\,\boldsymbol{A}|\,\mathbf{curl}\,\boldsymbol{A}') = (\mathtt{f}|\boldsymbol{A}') - (\mathtt{h}|\,\mathbf{curl}\,\boldsymbol{A}'). \end{cases} \tag{6.35}$$

Proposition 6.2.9 *The problem (6.35) is well-posed. In addition, its solution* $\boldsymbol{A}$ *is such that* $\mathbb{\mu}^{-1}\,\mathbf{curl}\,\boldsymbol{A} + \mathtt{h}$ *is the magnetostatic field.*

Proof. We know that $\|\,\mathbf{curl}\,\cdot\|$ is a norm on $\boldsymbol{H}_0(\mathbf{curl},\Omega) \cap \boldsymbol{H}^{\Gamma}(\operatorname{div} 0,\Omega)$, which is equivalent to the full norm, due to the first Weber inequality of Theorem 3.4.3, or using (6.3) with $\mathbb{c} = \mathbb{I}_3$. Using the Lax-Milgram Theorem 4.2.8, we conclude easily that (6.35) is well-posed, so it has one, and only one, solution $\boldsymbol{A}$. Let $\boldsymbol{h} = \mathbb{\mu}^{-1}\,\mathbf{curl}\,\boldsymbol{A} + \mathtt{h} \in \boldsymbol{L}^2(\Omega)$: one has

$$\operatorname{div} \mathbb{\mu}\boldsymbol{h} = 0,\ \ \mathbb{\mu}\boldsymbol{h}\cdot\boldsymbol{n}_{|\Gamma} = 0 \text{ and } P_{\boldsymbol{Z}_T^{\mu}}\boldsymbol{h} = \mathtt{h}.$$

The last property is a consequence of Remark 3.5.2 and Proposition 6.2.1.
To study the curl of $\boldsymbol{h}$, consider $\boldsymbol{z} \in \boldsymbol{D}(\Omega)$:

- $\exists! z \in H_0^1(\Omega)$ such that $\Delta z = \operatorname{div}\boldsymbol{z}$; then, $\boldsymbol{w} := \boldsymbol{z} - \mathbf{grad}\, z \in \boldsymbol{H}_0(\mathbf{curl},\Omega)$, with $\operatorname{div}\boldsymbol{w} = 0$. So, $\boldsymbol{A}' := \boldsymbol{w} - P_{\boldsymbol{Z}_N}\boldsymbol{w}$ belongs to $\boldsymbol{H}_0(\mathbf{curl},\Omega) \cap \boldsymbol{H}^{\Gamma}(\operatorname{div} 0,\Omega)$, according to Proposition 6.1.1 with $\mathbb{c} = \mathbb{I}_3$.
- By construction, $\mathbf{curl}\,\boldsymbol{A}' = \mathbf{curl}\,\boldsymbol{z}$, and moreover,

  $$(\mathtt{f}|\boldsymbol{A}') = (\mathtt{f}|\boldsymbol{z}) - (\mathtt{f}|\,\mathbf{grad}\, z) - (\mathtt{f}|P_{\boldsymbol{Z}_N}\boldsymbol{w}) = (\mathtt{f}|\boldsymbol{z}),$$

  since $\mathtt{f} \in \boldsymbol{H}^{\Gamma}(\operatorname{div} 0,\Omega)$ can be written as a curl, so $(\mathtt{f}|P_{\boldsymbol{Z}_N}\boldsymbol{w})$ vanishes by integration by parts.
- Putting $\boldsymbol{A}'$ as a test function in (6.35) yields

  $$\langle \mathbf{curl}(\mathbb{\mu}^{-1}\,\mathbf{curl}\,\boldsymbol{A} + \mathtt{h}) - \mathtt{f}, \overline{\boldsymbol{z}}\rangle = 0.$$

Hence, one concludes that $\mathbf{curl}\,\boldsymbol{h} = \mathtt{f}$, so $\boldsymbol{h}$ is a solution to the actual magnetostatic problem, whose solution is unique. ■

This suggests a third option for solving the magnetostatic-like problem (6.28), which is again a two-step method. Define

$$\boldsymbol{K}_T(\Omega;\mathbb{\mu}) := \boldsymbol{H}(\mathbf{curl},\Omega) \cap \boldsymbol{H}_0(\operatorname{div}\mathbb{\mu}0,\Omega). \tag{6.36}$$

One has the Helmholtz decomposition *à la §3.7*:

$$\boldsymbol{H}(\mathbf{curl},\Omega) = \mathbf{grad}[H^1_{zmv}(\Omega)] \overset{\perp_{\mu,c}}{\oplus} \boldsymbol{K}_T(\Omega;\mathbb{\mu}). \tag{6.37}$$

If we next introduce

$$\boldsymbol{H}^{\Sigma}(\mathbf{curl}\,0,\Omega) := \{\boldsymbol{f} \in \boldsymbol{H}(\mathbf{curl}\,0,\Omega)\ :\ P_{\boldsymbol{Z}_T^{\mu}}\boldsymbol{f} = 0\},$$

this function space is exactly made up of gradients of scalar fields that belong to $H^1_{zmv}(\Omega)$.

Proposition 6.2.10 *Let* Ω *be a domain such that* $(\mathbf{Top})_{I=0}$ *or* $(\mathbf{Top})_{I>0}$ *is fulfilled. Then,*

$$\boldsymbol{H}^{\Sigma}(\mathbf{curl}\,0,\Omega) = \{\mathbf{grad}\, q\ :\ q \in H^1_{zmv}(\Omega)\}.$$

Proof. Given $\boldsymbol{v} \in \boldsymbol{H}^{\Sigma}(\mathbf{curl}\,0, \Omega)$, there exists $\dot{q} \in P(\dot{\Omega})$ such that $\boldsymbol{v} = \widetilde{\mathbf{grad}}\,\dot{q}$, according to Theorem 3.3.2. Setting $\dot{\chi} := \sum_j [\dot{q}]_{\Sigma_j} \dot{q}_j^{\mu} \in Q_T(\dot{\Omega}; \mathbb{\mu})$, Proposition 6.2.1 yields that $q := \dot{q} - \dot{\chi}$ belongs to $H^1(\Omega)$. From $P_{\boldsymbol{Z}_T^{\mu}} \boldsymbol{v} = 0$, we deduce that

$$0 = (\boldsymbol{v} \mid \mathbb{\mu}\widetilde{\mathbf{grad}}\,\dot{\chi}) = \underbrace{(\mathbf{grad}\,q \mid \mathbb{\mu}\widetilde{\mathbf{grad}}\,\dot{\chi})}_{=0 \text{ by } (6.31)} + (\widetilde{\mathbf{grad}}\,\dot{\chi} \mid \mathbb{\mu}\widetilde{\mathbf{grad}}\,\dot{\chi}).$$

Hence, $\dot{\chi} = 0$ and $\dot{q} \in H^1(\Omega)$, so that $\boldsymbol{v} \in \{\mathbf{grad}\,q \ : \ q \in H^1_{zmv}(\Omega)\}$. The converse inclusion is straightforward, again by (6.31). ■

Corollary 6.2.11 *Let Ω be a domain such that* $\mathbf{(Top)}_{I=0}$ *or* $\mathbf{(Top)}_{I>0}$ *is fulfilled. Let $\mathbb{c}$ be a tensor field that fulfills an assumption like (5.10). In $\boldsymbol{H}(\mathbf{curl}, \Omega)$ endowed with the scalar product $(\cdot|\cdot)_{\mu,c\,\mathbf{curl}}$, one has the orthogonal decomposition*

$$\boldsymbol{H}(\mathbf{curl}, \Omega) = \boldsymbol{H}^{\Sigma}(\mathbf{curl}\,0, \Omega) \overset{\perp_{\mu,c}}{\oplus} \boldsymbol{K}_T(\Omega; \mathbb{\mu}).$$

Thanks to the Helmholtz decomposition (6.37), we can split the solution $\boldsymbol{H}$ to (6.28) as

$$\boldsymbol{H} = \mathbf{grad}\,\psi + \boldsymbol{h}, \quad \psi \in H^1_{zmv}(\Omega), \quad \boldsymbol{h} \in \boldsymbol{K}_T(\Omega; \mathbb{\mu}).$$

As we saw before, $\boldsymbol{h}$ is characterized by its curl and its projection onto $\boldsymbol{Z}_T(\Omega; \mathbb{\mu})$, namely $\mathtt{f}$ and $\mathtt{h}$; it is equal to $\mathbb{\mu}^{-1}\,\mathbf{curl}\,\boldsymbol{A} + \mathtt{h}$, with $\boldsymbol{A}$ the unique solution to (6.35).

On the other hand, $\psi \in H^1_{zmv}(\Omega)$ is characterized by $\operatorname{div} \mathbb{\mu}\,\mathbf{grad}\,\psi = \mathsf{g}$, $\mathbb{\mu}\partial_n \psi_{|\Gamma} = 0$. Equivalently (recall that $(\mathsf{g}|1) = 0$), it solves

$$\begin{cases} \textit{Find } \psi \in H^1_{zmv}(\Omega) \textit{ such that} \\ \forall \psi' \in H^1_{zmv}(\Omega), \ (\mathbb{\mu}\,\mathbf{grad}\,\psi | \,\mathbf{grad}\,\psi') = -(\mathsf{g}|\psi'). \end{cases} \tag{6.38}$$

According to the Poincaré-Wirtinger inequality of Theorem 2.1.37, the problem (6.38) is well-posed.

6.2.5 Magnetic energy matters

One can state a $\mathbb{\mu}$-orthogonal decomposition of $\boldsymbol{L}^2(\Omega)$, similar to Corollary 6.2.11.

Proposition 6.2.12 *Let Ω be a domain such that* $\mathbf{(Top)}_{I=0}$ *or* $\mathbf{(Top)}_{I>0}$ *is fulfilled. In $\boldsymbol{L}^2(\Omega)$ endowed with the scalar product $(\mathbb{\mu} \cdot |\cdot)$, one has the orthogonal decomposition*

$$\boldsymbol{L}^2(\Omega) = \mathbf{grad}[H^1_{zmv}(\Omega)] \overset{\perp_{\mu}}{\oplus} \widetilde{\mathbf{grad}}[Q_T(\dot{\Omega}; \mathbb{\mu})] \overset{\perp_{\mu}}{\oplus}$$
$$\{\boldsymbol{f} \in \boldsymbol{L}^2(\Omega) \ : \ \operatorname{div} \mathbb{\mu}\boldsymbol{f} = 0, \, \mathbb{\mu}\boldsymbol{f} \cdot \boldsymbol{n}_{|\Gamma} = 0, \, (\mathbb{\mu}\boldsymbol{f} | \widetilde{\mathbf{grad}}\,\dot{q}_i^{\mu}) = 0, \, \forall i\}.$$

Due to Theorem 3.5.1, any element $\boldsymbol{f}$ of the latter set can be written as $\boldsymbol{f} = \mathbb{\mu}^{-1}\,\mathbf{curl}\,\boldsymbol{w}$ in Ω, with $\boldsymbol{w}$ a divergence-free element of $\boldsymbol{H}_0(\mathbf{curl},\Omega)\cap\boldsymbol{H}(\mathrm{div},\Omega)$, with zero flux across the connected components of the boundary. Moreover, $\boldsymbol{w}$ is unique. Applying this decomposition to the magnetic-like field yields:

$$\boldsymbol{H} = \mathbf{grad}\,q + \widetilde{\mathbf{grad}\,\dot{q}^{\mu}} + \mathbb{\mu}^{-1}\,\mathbf{curl}\,\boldsymbol{A}$$

with a unique triple $(q, \dot{q}^{\mu}, \boldsymbol{A})$. Furthermore, by orthogonality, the magnetic energy writes, as a sum of positive terms,

$$(\mathbb{\mu}\boldsymbol{H}|\boldsymbol{H}) = \|\mathbb{\mu}^{1/2}\,\mathbf{grad}\,q\|^2 + \|\mathbb{\mu}^{1/2}\widetilde{\mathbf{grad}\,\dot{q}^{\mu}}\|^2 + \|\mathbb{\mu}^{-1/2}\,\mathbf{curl}\,\boldsymbol{A}\|^2.$$

Remark 6.2.13 *For the physical magnetic field, one has $q = 0$ above.*

6.2.6 Regular-gradient splitting of magnetic fields

Let us conclude the study of magnetic-like fields by establishing regular-gradient splittings of those fields that belong to $\boldsymbol{X}_T(\Omega;\mathbb{\mu})$. We follow [80].

Theorem 6.2.14 *Let Ω be a domain such that* $\mathbf{(Top)}_{I=0}$ *or* $\mathbf{(Top)}_{I>0}$ *is fulfilled, and assume that $\mathbb{\mu}$ is a tensor field that fulfills assumption (5.10). Then, there exists a continuous splitting operator acting from $\boldsymbol{X}_T(\Omega,\mathbb{\mu})$ to $\boldsymbol{H}^1_{zmv}(\Omega)\times\boldsymbol{Z}_T(\Omega)\times H^1_{zmv}(\Omega)$. More precisely, given $\boldsymbol{v}\in\boldsymbol{X}_T(\Omega,\mathbb{\mu})$,*

$$\begin{aligned}\exists(\boldsymbol{w}_{reg},\boldsymbol{z},q_0)\in\boldsymbol{H}^1_{zmv}(\Omega)\times\boldsymbol{Z}_T(\Omega)\times H^1_{zmv}(\Omega),\\ \boldsymbol{v}=\boldsymbol{w}_{reg}+\boldsymbol{z}+\mathbf{grad}\,q_0 \text{ in } \Omega.\end{aligned} \tag{6.39}$$

If, in addition, $\mathbb{\mu}$ fulfills the coefficient assumption on a partition $\mathcal{P}$, the scalar field q_0 is governed by the variational formulation below, for some $f\in L^2(\Omega)$ and $g_{\mathcal{F}}\in PH^{1/2}(\mathcal{F})$:

$$\begin{cases}\text{Find } q_0\in H^1_{zmv}(\Omega) \text{ such that}\\ \forall\psi\in H^1_{zmv}(\Omega),\ (\mathbb{\mu}\,\mathbf{grad}\,q_0\mid\mathbf{grad}\,\psi)\\ \qquad\qquad = -(\mathbb{\mu}\boldsymbol{z}\mid\mathbf{grad}\,\psi)+(f|\psi)+(g_{\mathcal{F}},\psi)_{L^2(\mathcal{F})}\,;\end{cases} \tag{6.40}$$

one has

$$\begin{cases}\|\boldsymbol{w}_{reg}\|_{\boldsymbol{H}^1(\Omega)}+\|\boldsymbol{z}\|_{\boldsymbol{H}^{1/2}(\Omega)}\le C\,\|\boldsymbol{v}\|_{\boldsymbol{H}(\mathbf{curl};\Omega)}\,,\\ \|\mathbb{\mu}\boldsymbol{z}\|_{\boldsymbol{P}\boldsymbol{H}^{1/2}(\Omega,\mathcal{P})}+\|f\|+\|g_{\mathcal{F}}\|_{PH^{1/2}(\mathcal{F})}\le C_{\mathbb{\mu}}\|\boldsymbol{v}\|_{\boldsymbol{X}_T(\Omega,\mathbb{\mu})}\,,\end{cases} \tag{6.41}$$

with a constant $C>0$ that depends only on Ω, respectively a constant $C_{\mathbb{\mu}}>0$ that depends on Ω and $\mathbb{\mu}$.

Remark 6.2.15 *In the splitting (6.39) of $\boldsymbol{v}\in\boldsymbol{X}_T(\Omega,\mathbb{\mu})$, $\boldsymbol{w}_{reg}$ does not fulfill any boundary condition in general. One can obtain a splitting that preserves the homogeneous boundary condition on the normal trace, under some moderate restrictions on the domain Ω (see Theorem 6.2.18 below). Regarding regularity, one has $\boldsymbol{w}_{reg}\in\boldsymbol{H}^1(\Omega)$, respectively $\boldsymbol{z}=\widetilde{\mathbf{grad}\,\dot{p}_z}\in\boldsymbol{H}^{1/2}(\Omega)$ with $\dot{p}_z\in P_{zmv}(\dot{\Omega})$, respectively $\mathbf{grad}\,q_0\in\boldsymbol{L}^2(\Omega)$. As in the case of the electric fields, the regularity result can be improved when $\mathbb{\mu}$ fulfills the coefficient assumption (see Corollary 6.2.17 below).*

Proof. Let $\boldsymbol{y} = \mathbf{curl}\,\boldsymbol{v} \in \boldsymbol{H}(\mathrm{div};\Omega)$. One has $\mathrm{div}\,\boldsymbol{y} = 0$ in Ω, and $\langle \boldsymbol{y}\cdot\boldsymbol{n}, 1\rangle_{H^{1/2}(\Gamma_k)} = 0$ for all k (see Remark 3.4.2). Thanks to Theorem 3.4.1 on vector potentials, there exists $\boldsymbol{w}_{reg} \in \boldsymbol{H}^1_{zmv}(\Omega)$ with $\mathrm{div}\,\boldsymbol{w}_{reg} = 0$ in Ω such that $\boldsymbol{y} = \mathbf{curl}\,\boldsymbol{w}_{reg}$ in Ω and

$$\|\boldsymbol{w}_{reg}\|_{\boldsymbol{H}^1(\Omega)} \le C\,\|\boldsymbol{y}\| \le C\,\|\boldsymbol{v}\|_{\boldsymbol{H}(\mathbf{curl};\Omega)}.$$

By construction, $\mathbf{curl}(\boldsymbol{v}-\boldsymbol{w}_{reg}) = 0$ in Ω, with $(\boldsymbol{v}-\boldsymbol{w}_{reg}) \in \boldsymbol{H}(\mathbf{curl};\Omega)$. According to Theorem 3.3.2 on scalar potentials, there exists $\dot{q} \in P_{zmv}(\dot{\Omega})$ such that $\boldsymbol{v} = \boldsymbol{w}_{reg} + \widetilde{\mathbf{grad}\,\dot{q}}$ in Ω. And $|\dot{q}|_{H^1(\dot{\Omega})} \le \|\boldsymbol{v}\| + \|\boldsymbol{w}_{reg}\| \le C\,\|\boldsymbol{v}\|_{\boldsymbol{H}(\mathbf{curl};\Omega)}$. Since elements of $Q_T(\dot{\Omega})$ can be characterized by their jumps on the cuts, we next introduce $\dot{p} \in Q_T(\dot{\Omega})$ such that $[\dot{p}]_{\Sigma_i} = [\dot{q}]_{\Sigma_i}$ for all i, and then $\boldsymbol{z} = \widetilde{\mathbf{grad}\,\dot{p}} \in \boldsymbol{Z}_T(\Omega)$. The norm $\|\dot{p}\|_{Q_T(\dot{\Omega})}$ is bounded by the ℓ_1-norm of the jumps, which is itself bounded by $|\dot{q}|_{H^1(\dot{\Omega})}$, so one gets $\|\boldsymbol{z}\|_{\boldsymbol{H}^{1/2}(\Omega)} \le C\,\|\boldsymbol{v}\|_{\boldsymbol{H}(\mathbf{curl};\Omega)}$. If one lets $q_0 = \widetilde{\dot{q}-\dot{p}}$, one has $q_0 \in H^1_{zmv}(\Omega)$, and in addition, it holds that

$$\boldsymbol{v} = \boldsymbol{w}_{reg} + \boldsymbol{z} + \mathbf{grad}\,q_0 \text{ in } \Omega,$$

with $\boldsymbol{w}_{reg} \in \boldsymbol{H}^1_{zmv}(\Omega)$, $\boldsymbol{z} \in \boldsymbol{Z}_T(\Omega)$, $q_0 \in H^1_{zmv}(\Omega)$, i.e., (6.39).
As to the definition of q_0 as the solution to (6.40) when $\mathbb{\mu}$ fulfills the coefficient assumption, let $\psi \in H^1_{zmv}(\Omega)$:

$$(\mathbb{\mu}\,\mathbf{grad}\,q_0 \mid \mathbf{grad}\,\psi) = -(\mathbb{\mu}\boldsymbol{z} \mid \mathbf{grad}\,\psi) + (\mathbb{\mu}\boldsymbol{v} \mid \mathbf{grad}\,\psi) - (\mathbb{\mu}\boldsymbol{w}_{reg} \mid \mathbf{grad}\,\psi).$$

As $\mathbb{\mu}\boldsymbol{v} \in \boldsymbol{H}_0(\mathrm{div};\Omega)$, one finds, by integration by parts, $(\mathbb{\mu}\boldsymbol{v} \mid \mathbf{grad}\,\psi) = -(\mathrm{div}\,\mathbb{\mu}\boldsymbol{v}|\psi)$.
For the third term, one proceeds as in the proof of Theorem 6.1.16, the only difference being that there are additional boundary terms:

$$-(\mathbb{\mu}\boldsymbol{w}_{reg} \mid \mathbf{grad}\,\psi) = (\widetilde{\mathrm{div}\,\mathbb{\mu}\boldsymbol{w}_{reg}}|\psi) - \sum_{F\in\mathcal{F}_{int}} ([\mathbb{\mu}\boldsymbol{w}_{reg}\cdot\boldsymbol{n}],\psi)_{L^2(F)} - (\mathbb{\mu}\boldsymbol{w}_{reg}\cdot\boldsymbol{n},\psi)_{L^2(\Gamma)}.$$

Next, define

$$f = -\,\mathrm{div}\,\mathbb{\mu}\boldsymbol{v} + \widetilde{\mathrm{div}\,\mathbb{\mu}\boldsymbol{w}_{reg}} \in L^2(\Omega), \quad g_{\mathcal{F}} = -[\mathbb{\mu}\boldsymbol{w}_{reg}\cdot\boldsymbol{n}] \in PH^{1/2}(\mathcal{F}),$$

where, for all $F \in \mathcal{F}_{bdry}$ and $z \in L^2(F)$, the "jump" $[z]$ is simply equal to z. It follows that q_0 is characterized by (6.40).
Finally, the first bound in (6.41) has already been derived, and the second one is obtained exactly as in the proof of Theorem 6.1.16, hence continuity of the splitting operator is obtained. ■

To continue, one needs regularity results regarding $\mathbf{grad}\,q_0$, where q_0 is now governed by (6.40). We use a second abstract shift theorem [53] for PDEs with Neumann boundary conditions (see footnote [6], p. 222, for comments on the optimality of the limit exponent, here denoted by τ_{Neu}).

Theorem 6.2.16 *Let Ω be a domain, and assume that $\mathfrak{k}$ fulfills the coefficient assumption. There exists $\tau_{Neu} \in]0, 1/2[$ depending only on the geometry and the coefficient $\mathfrak{k}$ such that, for all $t \in [0, \tau_{Neu}[$, and for all $\ell \in (H^{1-t}_{zmv}(\Omega))'$, the solution to*

$$\begin{cases} \text{Find } u \in H^1_{zmv}(\Omega) \text{ such that} \\ (\mathfrak{k}\,\mathbf{grad}\, u \mid \mathbf{grad}\,\psi) = \langle \ell, \psi \rangle_{H^1_{zmv}(\Omega)}, \ \forall \psi \in H^1_{zmv}(\Omega), \end{cases}$$

belongs to $H^{t+1}(\Omega)$, and moreover, $\|u\|_{H^{t+1}(\Omega)} \leq C_{t,\mathfrak{k}} \|\ell\|_{(H^{1-t}_{zmv}(\Omega))'}$ with a constant $C_{t,\mathfrak{k}} > 0$ that depends only on Ω, $\mathfrak{k}$ and t.

Combining the two Theorems 6.2.14 and 6.2.16 yields the result for the regular/gradient splitting of elements of $\boldsymbol{X}_T(\Omega, \xi)$. The proof is omitted, as it is very close to the one of Corollary 6.1.19.

Corollary 6.2.17 *Let Ω be a domain such that* $\mathbf{(Top)}_{I=0}$ *or* $\mathbf{(Top)}_{I>0}$ *is fulfilled, and assume that $\mathbb{u}$ fulfills the coefficient assumption. For all $t \in [0, \tau_{Neu}[$, it holds that*

$$\boldsymbol{X}_T(\Omega, \mathbb{u}) \subset \boldsymbol{H}^1(\Omega) + \widetilde{\mathbf{grad}}[P^{3/2}_{zmv}(\dot{\Omega})] + \mathbf{grad}[H^{t+1}_{zmv}(\Omega)],$$

where

$$P^{3/2}_{zmv}(\dot{\Omega}) := \left\{ \dot{q} \in P_{zmv}(\dot{\Omega}) : \widetilde{\mathbf{grad}}\, \dot{q} \in H^{1/2}(\Omega) \right\}.$$

For the sake of completeness, we mention that it is also possible to derive a splitting of $\boldsymbol{X}_T(\Omega, \mathbb{u})$ that preserves the homogeneous boundary condition on the normal trace, under some moderate restrictions on the domain Ω, cf. Definition 3.6.3. Let

$$\boldsymbol{X}^{reg}_T(\Omega) := \boldsymbol{X}_T(\Omega) \cap \boldsymbol{H}^1(\Omega).$$

Theorem 6.2.18 *Let Ω be a domain of $\mathfrak{A}$-type such that* $\mathbf{(Top)}_{I=0}$ *or* $\mathbf{(Top)}_{I>0}$ *is fulfilled, and assume that $\mathbb{u}$ is a tensor field that fulfills assumption (5.10). Then, there exists a continuous splitting operator acting from $\boldsymbol{X}_T(\Omega, \mathbb{u})$ to $\boldsymbol{X}^{reg}_T(\Omega) \times \boldsymbol{Z}_T(\Omega) \times H^1_{zmv}(\Omega)$.*

Proof. Let us begin as in Theorem 6.2.14 to derive $\boldsymbol{w}_{reg} \in \boldsymbol{H}^1_{zmv}(\Omega)$ such that $\mathbf{curl}\, \boldsymbol{w}_{reg} = \mathbf{curl}\, \boldsymbol{v}$ in Ω and $\|\boldsymbol{w}_{reg}\|_{\boldsymbol{H}^1(\Omega)} \leq C \|\boldsymbol{v}\|_{\boldsymbol{H}(\mathbf{curl};\Omega)}$. A priori, $\boldsymbol{w}_{reg} \cdot \boldsymbol{n}_{|\Gamma} \neq 0$. But, in a domain of $\mathfrak{A}$-type, one has (cf. Lemma 3.6.4),

$$\exists q_{reg} \in H^2(\Omega), \ \frac{\partial q_{reg}}{\partial n}_{|\Gamma} = \boldsymbol{w}_{reg} \cdot \boldsymbol{n}_{|\Gamma}\,; \ \|q_{reg}\|_{H^2(\Omega)} \leq C \|\boldsymbol{w}_{reg}\|_{\boldsymbol{H}^1(\Omega)}.$$

It follows that $\boldsymbol{v}_{reg} = \boldsymbol{w}_{reg} - \mathbf{grad}\, q_{reg} \in \boldsymbol{X}^{reg}_T(\Omega)$, $\mathbf{curl}\, \boldsymbol{v}_{reg} = \mathbf{curl}\, \boldsymbol{v}$ in Ω and $\|\boldsymbol{v}_{reg}\|_{\boldsymbol{H}^1(\Omega)} \leq C \|\boldsymbol{v}\|_{\boldsymbol{H}(\mathbf{curl};\Omega)}$. Because $\mathbf{curl}(\boldsymbol{v} - \boldsymbol{v}_{reg}) = 0$ in Ω with $(\boldsymbol{v} - \boldsymbol{v}_{reg}) \in \boldsymbol{H}(\mathbf{curl};\Omega)$, there exists $\dot{p} \in P_{zmv}(\dot{\Omega})$ such that $\boldsymbol{v} = \boldsymbol{v}_{reg} + \widetilde{\mathbf{grad}}\, \dot{p}$ in Ω and $|\dot{p}|_{H^1(\dot{\Omega})} \leq C \|\boldsymbol{v}\|_{\boldsymbol{H}(\mathbf{curl};\Omega)}$ (cf. Theorem 3.3.2). One then writes $\widetilde{\mathbf{grad}}\, \dot{p}$ as $\widetilde{\mathbf{grad}}\, \dot{p} = \boldsymbol{z} + \mathbf{grad}\, p_0$, with $\boldsymbol{z} \in \boldsymbol{Z}_T(\Omega)$ and $p_0 \in H^1_{zmv}(\Omega)$.

Hence, there exists $(\boldsymbol{v}_{reg}, \boldsymbol{z}, p_0) \in \boldsymbol{X}_T^{reg}(\Omega) \times \boldsymbol{Z}_T(\Omega) \times H^1_{zmv}(\Omega)$ such that $\boldsymbol{v} = \boldsymbol{v}_{reg} + \boldsymbol{z} + \mathbf{grad}\, p_0$ in Ω.
One then follows the proof of Theorem 6.2.14 to conclude that the splitting operator $\boldsymbol{v} \mapsto (\boldsymbol{v}_{reg}, \boldsymbol{z}, p_0)$ is continuous from $\boldsymbol{X}_T(\Omega, \mathbb{\mu})$ to $\boldsymbol{X}_T^{reg}(\Omega) \times \boldsymbol{Z}_T(\Omega) \times H^1_{zmv}(\Omega)$. ■

Remark 6.2.19 *When $\mathbb{\mu}$ is equal to the identity, the result of Theorem 6.2.18 may be viewed as a second Birman-Solomyak splitting, which preserves the magnetic boundary condition, as* $\mathbf{grad}\, p_0 \cdot \boldsymbol{n}_{|\Gamma} = 0$.

6.3 Further comments around static problems

In this section, we shall work with real variables and spaces; recall that the data and the solutions of static problems are real by their physical nature.

6.3.1 Electrostatic problem

A part of the electrostatic-like field $\boldsymbol{E}$ belongs to $\boldsymbol{Z}_N(\Omega; \mathbb{\varepsilon})$, i.e., its projection $\mathsf{e} = P_{\boldsymbol{Z}_N^{\varepsilon}} \boldsymbol{E}$. As we have seen earlier, elements of $\boldsymbol{Z}_N(\Omega; \mathbb{\varepsilon})$ are written as gradients, with potentials in $Q_N(\Omega; \mathbb{\varepsilon})$: $\mathsf{e} = \mathbf{grad}\, q^E$, for $q^E \in Q_N(\Omega; \mathbb{\varepsilon})$. According to Proposition 6.1.1, q^E can be characterized by its values on the connected components of the boundary: $(V_\ell)_\ell := ((q^E)_{|\Gamma_\ell})_{1 \le \ell \le K}$. Physically, those values are the electric potentials of the perfectly conducting bodies, whose difference with the reference value $(q^E)_{|\Gamma_0} = 0$ (with Γ_0 the ground), correspond to *applied voltages*.
On the other hand, one can set the total *surface charges* of those bodies, namely $(Q_k)_k := (\langle \mathbb{\varepsilon} \boldsymbol{E} \cdot \boldsymbol{n}, 1 \rangle_{\Gamma_k})_k$. Mathematically, however, this is possible only if those quantities have a meaning, which is guaranteed, provided that $\operatorname{div} \mathbb{\varepsilon} \boldsymbol{E} \in L^2(\Omega)$, namely provided that the data g belongs to $L^2(\Omega)$. See also the next paragraph for an extension to $\mathsf{g} \in H^{-s}(\Omega)$ for some $s \in [0, 1/2[$. Note that this is always true when $\mathsf{g} = 0$, in the absence of (volume) charges. If g is in $L^2(\Omega)$, we remark that

$$\sum_k Q_k = \langle \mathbb{\varepsilon} \boldsymbol{E} \cdot \boldsymbol{n}, 1 \rangle_{H^{1/2}(\Gamma)} = (\mathsf{g}|1),$$

so that Q_0 is determined by g and $(Q_k)_{1 \le k \le K}$.
Furthermore, one finds that e is such that, for all $\boldsymbol{z} = \mathbf{grad}\, q \in \boldsymbol{Z}_N(\Omega; \mathbb{\varepsilon})$,

$$\begin{aligned}(\mathbb{\varepsilon}\mathsf{e}|\boldsymbol{z}) &= (\mathbb{\varepsilon}\boldsymbol{E}|\boldsymbol{z}) = (\mathbb{\varepsilon}\boldsymbol{E}|\, \mathbf{grad}\, q) \\ &= -(\mathsf{g}|q) + \sum_k \langle \mathbb{\varepsilon} \boldsymbol{E} \cdot \boldsymbol{n}, q \rangle_{H^{1/2}(\Gamma_k)} = \sum_{1 \le k \le K} \{Q_k - (\mathsf{g}|q_k^{\varepsilon})\}\, q_{|\Gamma_k},\end{aligned}$$

where we used the identity $q = \sum_{1 \le k \le K} q_{|\Gamma_k} q_k^{\varepsilon}$. The right-hand side depends explicitly on g and $(Q_k)_{1 \le k \le K}$.
Now, to characterize $\mathsf{e} = \mathbf{grad}\, q^E$, one performs the computations below:

$$(\mathbb{c}\mathsf{e}|\boldsymbol{z}) = (\mathbb{c}\,\mathbf{grad}\,q^E|\,\mathbf{grad}\,q) = \sum_{\ell,k}(q^E)_{|\Gamma_\ell}\,q_{|\Gamma_k}(\mathbb{c}\,\mathbf{grad}\,q^\varepsilon_\ell|\,\mathbf{grad}\,q^\varepsilon_k).$$

So, if we define the matrix $\mathbb{C} \in \mathbb{R}^{K\times K}$ and $\mathbf{Q}, \mathbf{F} \in \mathbb{R}^K$ by

$$\mathbb{C}_{k\ell} = (\mathbb{c}\,\mathbf{grad}\,q^\varepsilon_\ell|\,\mathbf{grad}\,q^\varepsilon_k),\ \mathbf{Q}_\ell = (q^E)_{|\Gamma_\ell},\ \mathbf{F}_k = Q_k - (\mathsf{g}|q^\varepsilon_k),\ 1 \le k,\ell \le K\,,$$

we determine that

$$\mathbb{C}\mathbf{Q} = \mathbf{F}. \tag{6.42}$$

One can easily check that $\mathbb{C}$ is symmetric positive-definite (cf. Corollary 3.3.8), hence it is invertible: classically, $\mathbb{C}$ is called the *capacitance matrix*, and (6.42) relates the surface charges to the voltages, and *vice versa*.

6.3.2 Magnetostatic problem

For the magnetostatic-like problem, a part of its solution $\boldsymbol{H}$ belongs to $\boldsymbol{Z}_T(\Omega;\mathbb{\mu})$: $\mathtt{h} := P_{\boldsymbol{Z}^\mu_T}\boldsymbol{H}$, which can written as $\mathtt{h} = \widetilde{\mathbf{grad}\,\dot{q}^H}$, for $\dot{q}^H \in Q_T(\dot{\Omega};\mathbb{\mu})$. Due to Proposition 6.2.1, we know that $\mathtt{h}$ can be characterized either by the jumps on the cuts $([\dot{q}^H]_{\Sigma_i})_{1\le i\le I}$, or by the fluxes $(\langle\mathbb{\mu}\mathtt{h}\cdot\boldsymbol{n},1\rangle_{\Sigma_i})_{1\le i\le I}$. To relate the two, one may proceed by prescribing the fluxes $(Fl_j)_j := (\langle\mathbb{\mu}\boldsymbol{H}\cdot\boldsymbol{n},1\rangle_{\Sigma_j})_j$. Indeed, for all $\boldsymbol{z} = \widetilde{\mathbf{grad}\,\dot{q}} \in \boldsymbol{Z}_T(\Omega;\mathbb{\mu})$, and using $\dot{q} = \sum_{1\le i\le I}[\dot{q}]_{\Sigma_i}\dot{q}^\mu_i$, one finds, thanks to the integration-by-parts formula (3.6),

$$\begin{aligned}(\mathbb{\mu}\mathtt{h}\mid\boldsymbol{z}) &= (\mathbb{\mu}\boldsymbol{H}\mid\boldsymbol{z}) = (\mathbb{\mu}\boldsymbol{H}\mid\widetilde{\mathbf{grad}\,\dot{q}}) = (\mathbb{\mu}\boldsymbol{H},\mathbf{grad}\,\dot{q})_{\boldsymbol{L}^2(\dot{\Omega})}\\ &= -(\operatorname{div}\mathbb{\mu}\boldsymbol{H},\dot{q})_{\boldsymbol{L}^2(\dot{\Omega})} + \sum_i\langle\mathbb{\mu}\boldsymbol{H}\cdot\boldsymbol{n},[\dot{q}]_{\Sigma_i}\rangle_{\Sigma_i}\\ &= -(\mathsf{g}\mid\widetilde{\dot{q}}) + \sum_i\langle\mathbb{\mu}\boldsymbol{H}\cdot\boldsymbol{n},[\dot{q}]_{\Sigma_i}\rangle_{\Sigma_i} = \sum_{1\le i\le I}\left\{Fl_i - (\mathsf{g}\mid\widetilde{\dot{q}^\mu_i})\right\}[\dot{q}]_{\Sigma_i},\end{aligned}$$

Moreover, using the formula $\mathtt{h} = \sum_{1\le j\le I}[\dot{q}^H]_{\Sigma_j}\widetilde{\mathbf{grad}\,\dot{q}^\mu_j}$, one finds

$$(\mathbb{\mu}\mathtt{h}\mid\boldsymbol{z}) = \sum_{j,i}[\dot{q}^H]_{\Sigma_j}\,[\dot{q}]_{\Sigma_i}(\mathbb{\mu}\,\mathbf{grad}\,\dot{q}^\mu_j,\mathbf{grad}\,\dot{q}^\mu_i)_{\boldsymbol{L}^2(\dot{\Omega})}.$$

If we define the inductance matrix $\mathbb{L} \in \mathbb{R}^{I\times I}$ and $\mathbf{Q}, \mathbf{F} \in \mathbb{R}^I$ by

$$\mathbb{L}_{ij} = (\mathbb{\mu}\,\mathbf{grad}\,\dot{q}^\mu_j,\mathbf{grad}\,\dot{q}^\mu_i)_{\boldsymbol{L}^2(\dot{\Omega})},\ \mathbf{Q}_j = [\dot{q}^H]_{\Sigma_j},\ \mathbf{F}_i = Fl_i - (\mathsf{g}\mid\widetilde{\dot{q}^\mu_i}),\ 1 \le i,j \le I\,,$$

we have the relation $\mathbb{L}\mathbf{Q} = \mathbf{F}$. Finally, one can check that the matrix $\mathbb{L}$ is symmetric positive-definite (cf. Corollary 3.3.14), so it is invertible.

For the electrostatic-like problem, the scalar data g can be any element of $H^{-1}(\Omega)$, whereas we assumed $\mathsf{g} \in L^2(\Omega)$ for the magnetostatic-like problem. For this latter problem, it turns out that one can consider data $\mathsf{g} \in H^{-s}(\Omega)$,

for $s \in]0, 1/2[$ (with the compatibility condition $\langle \mathsf{g}, 1 \rangle_{H_0^s(\Omega)} = 0$). We refer to Theorem 2.2.22 and integration-by-parts formula (2.26). Applied to the magnetostatic-like problem, we conclude that the normal trace of $\mathbb{\mu}\boldsymbol{H}$ is well-defined[8] in $H^{-1/2}(\Gamma)$ for all $\mathsf{g} \in H^{-s}(\Omega)$, and hence it can be chosen equal to 0.

6.3.3 Other sets of boundary conditions

It is possible to solve static-like problems with mixed boundary conditions from an abstract point of view. We refer to [110] for detailed studies of the vector space of curl- and divergence-free fields with (vanishing) mixed boundary conditions.
On the other hand, one can specify other sets of boundary conditions, such as electric ports or internal conductor models, which are popular static (and time-harmonic) models to describe realistic configurations. A thorough mathematical study can be found in [6].

6.3.4 Application to time-dependent problems

As we saw in §5, no topological conditions are needed when solving the time-dependent Maxwell equations: topologically non-trivial domains, or domains with a non-connected boundary, are treated exactly like the "simpler" domains where $\boldsymbol{Z}_N(\Omega; \mathbb{\epsilon}) = \boldsymbol{Z}_T(\Omega; \mathbb{\mu}) = \{0\}$. We shall see in §7 that the same holds when using the various equivalent second-order formulations of Maxwell's equations. Here, we characterize the projection of the electromagnetic fields $(\boldsymbol{E}, \boldsymbol{H})(t)$ on the spaces of curl- and divergence-free fields $\boldsymbol{Z}_N(\Omega; \mathbb{\epsilon}) \times \boldsymbol{Z}_T(\Omega; \mathbb{\mu})$ in the general case in which these spaces are not trivial.

Faraday's law can be rewritten in variational form as

$$\forall t,\ \forall \boldsymbol{v} \in \boldsymbol{L}^2(\Omega), \quad (\mathbb{\mu}\frac{\partial \boldsymbol{H}}{\partial t}(t) \mid \boldsymbol{v}) + (\mathbf{curl}\, \boldsymbol{E}(t) \mid \boldsymbol{v}) = 0.$$

Choosing $\boldsymbol{v}^\mu \in \boldsymbol{Z}_T(\Omega; \mathbb{\mu})$, we notice that it holds that $(\mathbf{curl}\, \boldsymbol{E}(t) \mid \boldsymbol{v}^\mu) = 0$ by integration by parts (see Remark 3.5.2), because of the perfect conductor boundary condition. Hence, it follows that $(\mathbb{\mu}\boldsymbol{H}'(t) \mid \boldsymbol{v}^\mu) = 0$ for all times. This yields:

[8] If one considers any continuous linear form g on $H^1_{zmv}(\Omega)$ – by contrast, in the electrostatic-like case, one can choose any $\mathsf{g} \in (H_0^1(\Omega))'$ –, then there is no guarantee that the variational form

$$\forall q \in H^1_{zmv}(\Omega),\ (\mathbb{\mu}\boldsymbol{H} \mid \mathbf{grad}\, q) = \mathsf{g}(q),$$

which allows us to recover the vanishing boundary condition. For instance, taking $\mathsf{g}(q) = \langle \lambda, q \rangle_{H^{1/2}(\Gamma)}$ for some data $\lambda \in H^{-1/2}(\Gamma)$ (with compatibility condition $\langle \lambda, 1 \rangle_{H^{1/2}(\Gamma)} = 0$) yields $\mathbb{\mu}\boldsymbol{H} \cdot \boldsymbol{n}_{|\Gamma} = \lambda$. In this respect, the situation differs from the electrostatic-like case.

$$\forall t,\ \forall \boldsymbol{v}^\mu \in \boldsymbol{Z}_T(\Omega;\mathbb{\mu}),\quad (\mathbb{\mu}\boldsymbol{H}(t) \mid \boldsymbol{v}^\mu) = (\mathbb{\mu}\boldsymbol{H}_0 \mid \boldsymbol{v}^\mu).$$

In other words, $P_{\boldsymbol{Z}_T^\mu}\boldsymbol{H}(t) = \mathtt{h}_0$ for all t, where $\mathtt{h}_0 := P_{\boldsymbol{Z}_T^\mu}\boldsymbol{H}_0$. So, the data $\mathtt{h}_0$ that prescribes the value of the projection of $\boldsymbol{H}_0$ on $\boldsymbol{Z}_T(\Omega;\mathbb{\mu})$ actually characterizes the projection of the magnetic field at all times:

$$\forall t,\ P_{\boldsymbol{Z}_T^\mu}\boldsymbol{H}(t) = \mathtt{h}_0. \tag{6.43}$$

On the other hand, Ampère's law can be rewritten as

$$\forall t,\ \forall \boldsymbol{v} \in \boldsymbol{L}^2(\Omega),\quad (\mathbb{\varepsilon}\frac{\partial \boldsymbol{E}}{\partial t}(t) \mid \boldsymbol{v}) - (\mathbf{curl}\,\boldsymbol{H}(t) \mid \boldsymbol{v}) = -(\boldsymbol{J}(t) \mid \boldsymbol{v}).$$

Choosing $\boldsymbol{v}^\varepsilon \in \boldsymbol{Z}_N(\Omega;\mathbb{\varepsilon})$ yields (see Remark 3.4.2):

$$\forall t,\ \forall \boldsymbol{v}^\varepsilon \in \boldsymbol{Z}_N(\Omega;\mathbb{\varepsilon}),\quad (\mathbb{\varepsilon}P_{\boldsymbol{Z}_N^\varepsilon}\boldsymbol{E}(t) \mid \boldsymbol{v}^\varepsilon) = (\mathbb{\varepsilon}\mathtt{e}_0 \mid \boldsymbol{v}^\varepsilon) - \int_0^t (\boldsymbol{J}(s) \mid \boldsymbol{v}^\varepsilon)\,ds, \tag{6.44}$$

where $\mathtt{e}_0 := P_{\boldsymbol{Z}_N^\varepsilon}\boldsymbol{E}_0$. Therefore, together with $\boldsymbol{J}$, the data $\mathtt{e}_0$ that prescribes the value of the projection of $\boldsymbol{E}_0$ on $\boldsymbol{Z}_N(\Omega;\mathbb{\varepsilon})$ allows one to characterize the projection of the electric field at all times.

6.4 Other approximate models

6.4.1 Quasi-static models

In §1.4.3, we introduced two such models: the so-called electric quasi-static and magnetic quasi-static models.

Electric quasi-static model: For this model, according to (1.112)-(1.115), the electromagnetic fields are governed by

$$\begin{cases} \mathbf{curl}\,\boldsymbol{E} = 0 \text{ in } \Omega,\ t>0, \\ \operatorname{div}\mathbb{\varepsilon}\boldsymbol{E} = \varrho \text{ in } \Omega,\ t>0, \\ \boldsymbol{E}\times\boldsymbol{n} = 0 \text{ on } \Gamma,\ t>0, \\ \boldsymbol{E}(0) = \boldsymbol{E}_0 \text{ in } \Omega, \end{cases} \qquad \begin{cases} \mathbf{curl}\,\boldsymbol{H} = \mathbb{\varepsilon}\dfrac{\partial \boldsymbol{E}}{\partial t} + \boldsymbol{J} \text{ in } \Omega,\ t>0, \\ \operatorname{div}\mathbb{\mu}\boldsymbol{H} = 0 \text{ in } \Omega, \qquad t>0, \\ \mathbb{\mu}\boldsymbol{H}\cdot\boldsymbol{n} = 0 \text{ on } \Gamma, \qquad t>0, \\ \boldsymbol{H}(0) = \boldsymbol{H}_0 \text{ in } \Omega. \end{cases} \tag{6.45}$$

Looking at the structure of the equations, we see that the electric field is the solution to the electrostatic-like problem (6.1), with time-dependent data $(\mathtt{f},\mathtt{g}) = (0,\varrho(t))$ for $t>0$. If one recalls the definition of the "full" electrostatic-like problem (6.7), one has to add a condition on the projection on $\boldsymbol{Z}_N(\Omega;\mathbb{\varepsilon})$ to guarantee well-posedness for $t>0$:

$$P_{\boldsymbol{Z}_N^\varepsilon}\boldsymbol{E} = \mathtt{e},\quad t>0. \tag{6.46}$$

Lastly, to have a solution at $t=0$ that matches the initial condition, one assumes that $\boldsymbol{E}_0$ solves problem (6.7) with data $(\mathtt{f},\mathtt{g},\mathtt{e}) = (0,\varrho(0),\mathtt{e}(0))$.

Once existence of the electric field $\boldsymbol{E}$ is obtained, we see that the (time-dependent) magnetic field $\boldsymbol{H}$ is governed by the magnetostatic-like equations (6.23), with time-dependent data $(\mathtt{f},\mathtt{g}) = (\mathbb{e}\boldsymbol{E}'(t) + \boldsymbol{J}(t), 0)$ for $t > 0$. In particular, one must have $\mathbb{e}\boldsymbol{E}'(t) + \boldsymbol{J}(t) \in \boldsymbol{H}^{\Gamma}(\operatorname{div} 0, \Omega)$ for $t > 0$. First, one has $\operatorname{div}(\mathbb{e}\boldsymbol{E}' + \boldsymbol{J}) = 0$ if, and only if, the charge conservation equation holds, so we assume that this is the case. Second, for the field $\mathbb{e}\boldsymbol{E}'(t) + \boldsymbol{J}(t)$ to belong to $\boldsymbol{H}^{\Gamma}(\operatorname{div} 0, \Omega)$ at all times, we simply impose, in the spirit of (6.44), the condition

$$\forall t,\ \forall \boldsymbol{v}^{\varepsilon} \in \boldsymbol{Z}_N(\Omega;\mathbb{e}), \quad (\mathbb{e}\mathtt{e}(t) \mid \boldsymbol{v}^{\varepsilon}) = (\mathbb{e}\mathtt{e}(0) \mid \boldsymbol{v}^{\varepsilon}) - \int_0^t (\boldsymbol{J}(s) \mid \boldsymbol{v}^{\varepsilon})\, ds. \quad (6.47)$$

To guarantee well-posedness for $t > 0$, one has to add a condition on the projection on $\boldsymbol{Z}_T(\Omega;\mathbb{\mu})$ (cf. the "full" magnetostatic-like problem (6.28)):

$$P_{\boldsymbol{Z}_T^{\mu}} \boldsymbol{H} = \mathtt{h}, \quad t > 0. \quad (6.48)$$

Lastly, to have a solution at $t = 0$ that matches the initial condition, one assumes that $\boldsymbol{H}_0$ solves problem (6.28) with data $(\mathtt{f},\mathtt{g},\mathtt{h}) = (\mathbb{e}\boldsymbol{E}'(0) + \boldsymbol{J}(0), 0, \mathtt{h}(0))$.

Theorem 6.4.1 *Consider a perfect medium in a domain Ω of $\mathbb{R}^3$ encased in a perfect conductor.*
Assume that

$$\begin{cases} \varrho \in C^1(\mathbb{R}^+; H^{-1}(\Omega)), \\ \mathtt{e} \in C^1(\mathbb{R}^+; \boldsymbol{Z}_N(\Omega;\mathbb{e})), \\ \boldsymbol{E}_0 \in \boldsymbol{H}_0(\mathbf{curl},\Omega) \ : \ \mathbf{curl}\, \boldsymbol{E}_0 = 0,\ \operatorname{div} \mathbb{e}\boldsymbol{E}_0 = \varrho(0),\ P_{\boldsymbol{Z}_N^{\varepsilon}} \boldsymbol{E}_0 = \mathtt{e}(0); \end{cases}$$

thus, there exists one, and only one, electric field $\boldsymbol{E}$:

$$\boldsymbol{E} \in C^1(\mathbb{R}^+; \boldsymbol{H}_0(\mathbf{curl},\Omega)),$$

which solves Eqs. (6.45) and (6.46), with continuous dependence on the data.
Assume, furthermore, that

$$\begin{cases} \boldsymbol{J} \in C^0(\mathbb{R}^+; \boldsymbol{L}^2(\Omega)),\ \dfrac{\partial \varrho}{\partial t} + \operatorname{div} \boldsymbol{J} = 0, \quad t \geq 0; \\ \mathtt{e} \textit{ fulfills Eq. } (6.47),\ \mathtt{h} \in C^0(\mathbb{R}^+; \boldsymbol{Z}_T(\Omega;\mathbb{\mu})); \\ \boldsymbol{H}_0 \in \boldsymbol{H}_0(\operatorname{div} \mathbb{\mu},\Omega) \ : \ \mathbf{curl}\, \boldsymbol{H}_0 = \mathbb{e}\boldsymbol{E}'(0) + \boldsymbol{J}(0),\ \operatorname{div} \mathbb{\mu}\boldsymbol{H}_0 = 0,\ P_{\boldsymbol{Z}_T^{\mu}} \boldsymbol{H}_0 = \mathtt{h}(0); \end{cases}$$

thus, there exists one, and only one, magnetic field $\boldsymbol{H}$:

$$\boldsymbol{H} \in C^0(\mathbb{R}^+; \boldsymbol{H}(\mathbf{curl},\Omega) \cap \boldsymbol{H}_0(\operatorname{div} \mathbb{\mu},\Omega)),$$

which solves Eqs. (6.45) and (6.48), with continuous dependence on the data.

Proof. One successively applies Theorems 6.1.4 and 6.2.5. ■

Remark 6.4.2 *The variational formulation one uses to solve the problem in $\boldsymbol{H}$, namely (6.32) or (6.33), can be* simplified *if one chooses the tensor field $\mathbb{c}$ equal to $\mathbb{c}^{-1}$. Indeed, one has $\mathtt{f} = \mathbb{c}\boldsymbol{E}'(t) + \boldsymbol{J}(t)$, so that, for all $\boldsymbol{v} \in \boldsymbol{H}(\mathbf{curl}, \Omega)$:*

$$(\mathbb{c}\mathtt{f} \mid \mathbf{curl}\,\boldsymbol{v}) = (\boldsymbol{E}'(t) \mid \mathbf{curl}\,\boldsymbol{v}) + (\mathbb{c}^{-1}\boldsymbol{J}(t) \mid \mathbf{curl}\,\boldsymbol{v}) = (\mathbb{c}^{-1}\boldsymbol{J}(t) \mid \mathbf{curl}\,\boldsymbol{v}),$$

as the first term vanishes by integration by parts. Hence, one can view the addition of $\mathbb{c}\boldsymbol{E}'(t)$ to $\boldsymbol{J}(t)$ as a correction of the latter, so that the sum belongs to $\boldsymbol{H}^{\Gamma}(\operatorname{div} 0, \Omega)$ as needed. In other words, for the electric quasi-static model, the solution of the problems in $\boldsymbol{E}$ and $\boldsymbol{H}$ are decoupled.

Magnetic quasi-static model: For this second model, according to (1.116)-(1.119), the electromagnetic fields are governed by

$$\begin{cases} \mathbf{curl}\,\boldsymbol{H} = \boldsymbol{J} \text{ in } \Omega,\ t > 0, \\ \operatorname{div} \mathbb{\mu}\boldsymbol{H} = 0 \text{ in } \Omega,\ t > 0, \\ \mathbb{\mu}\boldsymbol{H} \cdot \boldsymbol{n} = 0 \text{ on } \Gamma,\ t > 0, \\ \boldsymbol{H}(0) = \boldsymbol{H}_0 \text{ in } \Omega, \end{cases} \qquad \begin{cases} \mathbf{curl}\,\boldsymbol{E} = -\mathbb{\mu}\dfrac{\partial \boldsymbol{H}}{\partial t} \text{ in } \Omega,\ t > 0, \\ \operatorname{div} \mathbb{c}\boldsymbol{E} = \varrho \text{ in } \Omega, \qquad t > 0, \\ \boldsymbol{E} \times \boldsymbol{n} = 0 \text{ on } \Gamma, \qquad t > 0, \\ \boldsymbol{E}(0) = \boldsymbol{E}_0 \text{ in } \Omega. \end{cases} \tag{6.49}$$

To guarantee well-posedness for $\boldsymbol{H}$ governed by (6.49), one imposes that $\boldsymbol{J}(t) \in \boldsymbol{H}^{\Gamma}(\operatorname{div} 0, \Omega)$ for $t > 0$, together with a condition like (6.48). Then, one assumes that $\boldsymbol{H}_0$ solves (6.28) with data $(\mathtt{f}, \mathtt{g}, \mathtt{h}) = (\boldsymbol{J}(0), 0, \mathtt{h}(0))$.
On the other hand, to guarantee well-posedness for $\boldsymbol{E}$ governed by (6.49), one must have $\mathbb{\mu}\boldsymbol{H}'(t) \in \boldsymbol{H}_0^{\Sigma}(\operatorname{div} 0, \Omega)$ for $t > 0$. Owing to the definition of $\boldsymbol{H}_0^{\Sigma}(\operatorname{div} 0, \Omega)$ and Proposition 6.2.1, it corresponds to $\mathtt{h}' = 0$:

$$\forall t,\ \mathtt{h}(t) = \mathtt{h}(0). \tag{6.50}$$

Also, one uses a condition similar to (6.46) to have uniqueness. Finally, one assumes that $\boldsymbol{E}_0$ solves (6.7) with data $(\mathtt{f}, \mathtt{g}, \mathtt{e}) = (-\mathbb{\mu}\boldsymbol{H}'(0), \varrho(0), \mathtt{e}(0))$.

Theorem 6.4.3 *Consider a perfect medium in a domain Ω of $\mathbb{R}^3$ encased in a perfect conductor.*
Assume that

$$\begin{cases} \boldsymbol{J} \in C^1(\mathbb{R}^+; \boldsymbol{H}^{\Gamma}(\operatorname{div} 0, \Omega)), \\ \mathtt{h} \in C^1(\mathbb{R}^+; \boldsymbol{Z}_T(\Omega; \mathbb{\mu})), \\ \boldsymbol{H}_0 \in \boldsymbol{H}_0(\operatorname{div} \mathbb{\mu}, \Omega) \ : \ \mathbf{curl}\,\boldsymbol{H}_0 = \boldsymbol{J}(0),\ \operatorname{div} \mathbb{\mu}\boldsymbol{H}_0 = 0,\ P_{\boldsymbol{Z}_T^{\mu}}\boldsymbol{H}_0 = \mathtt{h}(0); \end{cases}$$

thus, there exists one, and only one, magnetic field $\boldsymbol{H}$:

$$\boldsymbol{H} \in C^1(\mathbb{R}^+; \boldsymbol{H}(\mathbf{curl}, \Omega) \cap \boldsymbol{H}_0(\operatorname{div} \mathbb{\mu}, \Omega)),$$

which solves Eqs. (6.49) and (6.48), with continuous dependence on the data. Assume, furthermore, that

$$\begin{cases} \varrho \in C^0(\mathbb{R}^+; H^{-1}(\Omega))\,; \\ \mathtt{h} \textit{ fulfills Eq. } (6.50),\ \mathtt{e} \in C^0(\mathbb{R}^+; \boldsymbol{Z}_N(\Omega; \mathbb{e}))\,; \\ \boldsymbol{E}_0 \in \boldsymbol{H}_0(\mathbf{curl}, \Omega)\ : \\ \qquad \mathbf{curl}\, \boldsymbol{E}_0 = -\mathbb{\mu} \boldsymbol{H}'(0),\ \mathrm{div}\, \mathbb{e} \boldsymbol{E}_0 = \varrho(0),\ P_{\boldsymbol{Z}^{\varepsilon}_N} \boldsymbol{E}_0 = \mathtt{e}(0); \end{cases} \tag{6.51}$$

thus, there exists one, and only one, electric field $\boldsymbol{E}$*:*

$$\boldsymbol{E} \in C^0(\mathbb{R}^+; \boldsymbol{H}_0(\mathbf{curl}, \Omega))\,,$$

which solves Eqs. (6.49) and (6.46), with continuous dependence on the data.

Remark 6.4.4 *By construction, one has* $\mathbb{\mu}^{-1}\, \mathbf{curl}\, \boldsymbol{E} \in C^0(\mathbb{R}^+; \boldsymbol{H}(\mathbf{curl}, \Omega))$.

Proof. One successively applies Theorems 6.2.5 and 6.1.4. ■

6.4.2 Darwin model

Below, let us explicitly build the Darwin model (cf. §1.4.4), using the solutions to the electric and magnetic quasi-static models, with suitable data.

1. Define $(\boldsymbol{E}^L, \boldsymbol{H})$ as the solution to the electric quasi-static model (6.45) with data $\boldsymbol{J}$ and ϱ, under the assumptions of Theorem 6.4.1. Remark 6.4.2 still applies.
2. Define $\boldsymbol{E}^T$ as the electric part of the magnetic quasi-static model (6.49), where the magnetic data is equal to $\boldsymbol{H}$ from step 1., with $\varrho = 0$ and $\mathtt{e} = 0$. In particular, the initial data, called $\boldsymbol{E}^T_0$, is defined by $\mathbf{curl}\, \boldsymbol{E}^T_0 = -\mathbb{\mu} \boldsymbol{H}'(0)$, $\mathrm{div}\, \mathbb{e} \boldsymbol{E}^T_0 = 0$, $P_{\boldsymbol{Z}^{\varepsilon}_N} \boldsymbol{E}^T_0 = 0$. As observed in the subsection devoted to quasi-static models, it is required that $\mathtt{h}$ fulfills Eq. (6.50).
3. Define the total electromagnetic fields as $(\boldsymbol{E}, \boldsymbol{H}) := (\boldsymbol{E}^L + \boldsymbol{E}^T, \boldsymbol{H})$.

According to the above, the total electromagnetic fields, split as in step 3., are governed by

$$\begin{cases} \mathbb{e} \dfrac{\partial \boldsymbol{E}^L}{\partial t} - \mathbf{curl}\, \boldsymbol{H} = -\boldsymbol{J} \text{ in } \Omega, & t > 0, \\ \mathbf{curl}\, \boldsymbol{E}^L = 0,\ \mathbb{\mu} \dfrac{\partial \boldsymbol{H}}{\partial t} + \mathbf{curl}\, \boldsymbol{E}^T = 0 \text{ in } \Omega, & t > 0, \\ \mathrm{div}\, \mathbb{e} \boldsymbol{E}^L = \varrho,\ \mathrm{div}\, \mathbb{e} \boldsymbol{E}^T = 0 \text{ in } \Omega, & t > 0, \\ \mathrm{div}\, \mathbb{\mu} \boldsymbol{H} = 0 \text{ in } \Omega, & t > 0, \\ P_{\boldsymbol{Z}^{\varepsilon}_N} \boldsymbol{E}^L = \mathtt{e},\ P_{\boldsymbol{Z}^{\varepsilon}_N} \boldsymbol{E}^T = 0,\ P_{\boldsymbol{Z}^{\mu}_T} \boldsymbol{H} = \mathtt{h}, & t > 0, \\ \boldsymbol{E}^L \times \boldsymbol{n} = 0,\ \boldsymbol{E}^T \times \boldsymbol{n} = 0,\ \mathbb{\mu} \boldsymbol{H} \cdot \boldsymbol{n} = 0 \text{ on } \Gamma, & t > 0, \\ \boldsymbol{E}^L(0) = \boldsymbol{E}^L_0,\ \boldsymbol{E}^T(0) = \boldsymbol{E}^T_0,\ \boldsymbol{H}(0) = \boldsymbol{H}_0 \text{ in } \Omega. \end{cases} \tag{6.52}$$

The above is complemented by the charge conservation equation, and by Eqs. (6.47) and (6.50) to ensure well-posedness with respect to the projections on $\boldsymbol{Z}_N(\Omega; \mathbb{e}) \times \boldsymbol{Z}_T(\Omega; \mathbb{\mu})$. Hence, the total electromagnetic fields are governed by Maxwell's equations, where the divergence(ε)-free part $\mathbb{e} \partial_t \boldsymbol{E}^T$ of the electric

displacement has been neglected in Ampère's law. Indeed, let $\boldsymbol{E} = \boldsymbol{E}^L + \boldsymbol{E}^T$. Then, the electromagnetic fields $(\boldsymbol{E}, \boldsymbol{H})$ satisfy the equations:

$$\begin{cases} \mathbf{curl}\, \mathbb{c}^{-1}(\mathbf{curl}\, \boldsymbol{H} - \boldsymbol{J}) = 0,\ \operatorname{div} \mathbb{\mu} \boldsymbol{H} = 0 \text{ in } \Omega,\ t > 0, \\ \mathbf{curl}\, \boldsymbol{E} = -\mathbb{\mu} \dfrac{\partial \boldsymbol{H}}{\partial t},\ \operatorname{div} \mathbb{c} \boldsymbol{E} = \varrho \text{ in } \Omega, \qquad t > 0, \end{cases} \tag{6.53}$$

which is a generalization of the Darwin model (cf. §1.4.4) in a domain made of a perfect medium. In addition, they fulfill the boundary, projection and initial conditions below.

$$\begin{cases} \boldsymbol{E} \times \boldsymbol{n} = 0,\ \mathbb{\mu} \boldsymbol{H} \cdot \boldsymbol{n} = 0,\ \mathbb{c}^{-1}(\mathbf{curl}\, \boldsymbol{H} - \boldsymbol{J}) \times \boldsymbol{n} = 0 \text{ on } \Gamma,\ t > 0, \\ P_{\boldsymbol{Z}_N^\varepsilon} \boldsymbol{E} = \mathtt{e},\ P_{\boldsymbol{Z}_T^\mu} \boldsymbol{H} = \mathtt{h}, \qquad t > 0, \\ \boldsymbol{E}(0) = \boldsymbol{E}_0,\ \boldsymbol{H}(0) = \boldsymbol{H}_0 \text{ in } \Omega. \end{cases} \tag{6.54}$$

Theorem 6.4.5 *Consider a perfect medium in a domain Ω of $\mathbb{R}^3$ encased in a perfect conductor.*
Assume that

$$\begin{cases} \varrho \in C^2(\mathbb{R}^+; H^{-1}(\Omega)),\ \boldsymbol{J} \in C^1(\mathbb{R}^+; \boldsymbol{L}^2(\Omega)), \\ \dfrac{\partial \varrho}{\partial t} + \operatorname{div} \boldsymbol{J} = 0, \quad t \geq 0\,; \\ \mathtt{e} \in C^2(\mathbb{R}^+; \boldsymbol{Z}_N(\Omega; \mathbb{c})),\ \mathtt{h} \textit{ fulfill Eqs. } (6.47) \textit{ and } (6.50)\,; \\ (\boldsymbol{E}_0, \boldsymbol{H}_0) \in \boldsymbol{H}_0(\mathbf{curl}, \Omega) \times \boldsymbol{H}_0(\operatorname{div} \mathbb{\mu}, \Omega)\ : \\ \mathbf{curl}\, \boldsymbol{E}_0 \in \boldsymbol{H}_0^\Sigma(\operatorname{div} 0, \Omega),\ \operatorname{div} \mathbb{c} \boldsymbol{E}_0 = \varrho(0),\ P_{\boldsymbol{Z}_N^\varepsilon} \boldsymbol{E}_0 = \mathtt{e}(0), \\ \operatorname{div} \mathbb{\mu} \boldsymbol{H}_0 = 0,\ P_{\boldsymbol{Z}_T^\mu} \boldsymbol{H}_0 = \mathtt{h}(0), \\ \boldsymbol{F}_0 := \mathbb{c}^{-1}(\mathbf{curl}\, \boldsymbol{H}_0 - \boldsymbol{J}(0)) \in \boldsymbol{H}_0(\mathbf{curl}, \Omega), \\ \mathbf{curl}\, \boldsymbol{F}_0 = 0,\ P_{\boldsymbol{Z}_N^\varepsilon} \boldsymbol{F}_0 = \mathtt{e}'(0); \end{cases}$$

thus, there exists one, and only one, couple of electromagnetic fields $(\boldsymbol{E}, \boldsymbol{H})$:

$$\begin{aligned} &\boldsymbol{E} \in C^0(\mathbb{R}^+; \boldsymbol{H}_0(\mathbf{curl}, \Omega)), \\ &\boldsymbol{H} \in C^1(\mathbb{R}^+; \boldsymbol{H}(\mathbf{curl}, \Omega) \cap \boldsymbol{H}_0(\operatorname{div} \mathbb{\mu}, \Omega)), \end{aligned} \tag{6.55}$$

which solves the Darwin model (6.53-6.54), with continuous dependence on the data.

Remark 6.4.6 *Note that one has to choose data with increased time-regularity (compared to the quasi-static models). These technical conditions reflect the somewhat artificial character of the model. It follows that, by construction, the total electric field is such that $\mathbb{\mu}^{-1}\, \mathbf{curl}\, \boldsymbol{E} \in C^0(\mathbb{R}^+; \boldsymbol{H}(\mathbf{curl}, \Omega))$.*

Proof. Existence and continuous dependence with respect to the data follow from the application of Theorem 6.4.1 (electric and magnetic parts) and Theorem 6.4.3 (electric part).
As a matter of fact, one first solves the electric quasi-static model (in the electric part) with data ϱ, $\mathtt{e}$ and $\boldsymbol{E}_0^L$, where the latter is defined by $\boldsymbol{E}_0^L \in \boldsymbol{H}_0(\mathbf{curl}, \Omega)$, $\mathbf{curl}\, \boldsymbol{E}_0^L = 0$, $\operatorname{div} \mathbb{c} \boldsymbol{E}_0^L = \varrho(0)$, and $P_{\boldsymbol{Z}_N^\varepsilon} \boldsymbol{E}_0^L = \mathtt{e}(0)$.

Its solution is called $\boldsymbol{E}^L$. Then, one solves the same problem with data ϱ', $\mathtt{e}'$ and $\boldsymbol{F}_0$, whose solution is equal to $(\boldsymbol{E}^L)'$ by uniqueness. The solution $\boldsymbol{E}^L$ thus belongs to $C^2(\mathbb{R}^+; \boldsymbol{H}_0(\mathbf{curl}, \Omega))$.
Next, one solves the magnetic part of the electric quasi-static model, with data $\boldsymbol{J}$, $\mathtt{e}$, $\mathtt{h}$ and $\boldsymbol{H}_0$, whose solution is called $\boldsymbol{H}$. And then the same problem with data $\boldsymbol{J}'$, $\mathtt{e}'$, $\mathtt{h}' = 0$ and $\boldsymbol{G}_0 := -\mathbb{\mu}^{-1}\,\mathbf{curl}\,\boldsymbol{E}_0 \in \boldsymbol{H}_0(\operatorname{div}\mathbb{\mu}, \Omega)$, so that $\operatorname{div}\mathbb{\mu}\boldsymbol{G}_0 = 0$, $P_{\boldsymbol{Z}_T^\mu}\boldsymbol{G}_0 = 0$ (to obtain $P_{\boldsymbol{Z}_T^\mu}\boldsymbol{G}_0 = 0$, one uses Proposition 6.2.1, noting that $\mathbf{curl}\,\boldsymbol{E}_0 \in \boldsymbol{H}_0^\Sigma(\operatorname{div} 0, \Omega)$). Once more by uniqueness, the solution $\boldsymbol{H}$ actually belongs to $\boldsymbol{H} \in C^1(\mathbb{R}^+; \boldsymbol{H}(\mathbf{curl}, \Omega) \cap \boldsymbol{H}_0(\operatorname{div}\mathbb{\mu}, \Omega))$.
Finally, one solves the magnetic quasi-static model only in the electric part with the magnetic field $\boldsymbol{H}$ defined as above, and zero charge density, zero projection on $\boldsymbol{Z}_N(\Omega; \mathbb{\varepsilon})$ and initial condition $\boldsymbol{E}_0 - \boldsymbol{E}^L(0)$. Its solution $\boldsymbol{E}^T$ belongs to $C^0(\mathbb{R}^+; \boldsymbol{H}_0(\mathbf{curl}, \Omega))$.
By construction, the triple $(\boldsymbol{E}^L, \boldsymbol{E}^T, \boldsymbol{H})$ satisfies (6.52), so $(\boldsymbol{E}^L + \boldsymbol{E}^T, \boldsymbol{H})$ is a solution to (6.53-6.54) in the sense of (6.55), with continuous dependence with respect to the data.
Regarding uniqueness, for $t \in \mathbb{R}^+$, one finds, by integration by parts,

$$(\mathbb{\mu}\frac{\partial \boldsymbol{H}}{\partial t}(t) \mid \boldsymbol{H}(t)) = -(\mathbf{curl}\,\boldsymbol{E}^T(t) \mid \boldsymbol{H}(t)) = -(\boldsymbol{E}^T(t) \mid \mathbf{curl}\,\boldsymbol{H}(t)).$$

Now, $\boldsymbol{E}^T(t) \in \boldsymbol{L}^2(\Omega)$ with $\operatorname{div}\mathbb{\varepsilon}\boldsymbol{E}^T(t) = 0$ and $P_{\boldsymbol{Z}_N^\varepsilon}\boldsymbol{E}^T(t) = 0$. According to Theorem 3.4.1, there exists $\boldsymbol{w}(t) \in \boldsymbol{H}^1_{zmv}(\Omega)$ such that $\mathbb{\varepsilon}\boldsymbol{E}^T(t) = \mathbf{curl}\,\boldsymbol{w}(t)$. Introducing $\boldsymbol{F}(t) := \mathbb{\varepsilon}^{-1}(\mathbf{curl}\,\boldsymbol{H}(t) - \boldsymbol{J}(t)) \in \boldsymbol{H}_0(\mathbf{curl}, \Omega)$ with $\mathbf{curl}\,\boldsymbol{F}(t) = 0$ (cf. (6.52)), one has $(\mathbf{curl}\,\boldsymbol{w}(t) \mid \boldsymbol{F}(t)) = 0$ by integration by parts, so one finds:

$$\begin{aligned}(\mathbb{\mu}\frac{\partial \boldsymbol{H}}{\partial t}(t) \mid \boldsymbol{H}(t)) &= -(\mathbb{\varepsilon}^{-1}\,\mathbf{curl}\,\boldsymbol{w}(t) \mid \mathbf{curl}\,\boldsymbol{H}(t)) \\ &= -(\mathbf{curl}\,\boldsymbol{w}(t) \mid \mathbb{\varepsilon}^{-1}\,\mathbf{curl}\,\boldsymbol{H}(t)) = -(\mathbf{curl}\,\boldsymbol{w}(t) \mid \mathbb{\varepsilon}^{-1}\boldsymbol{J}(t)) \\ &= -(\mathbb{\varepsilon}^{-1}\,\mathbf{curl}\,\boldsymbol{w}(t) \mid \boldsymbol{J}(t)) = -(\boldsymbol{E}^T(t) \mid \boldsymbol{J}(t)).\end{aligned}$$

Hence, if $\boldsymbol{J} = 0$ and $\boldsymbol{H}_0 = 0$, one has $\boldsymbol{H}(t) = 0$ for all t. In particular, $\mathbf{curl}\,\boldsymbol{E} = 0$. If, in addition, $\varrho = 0$ and $\mathtt{e} = 0$, then using Theorem 6.1.4, one infers that $\boldsymbol{E}(t) = 0$ for all t. So, the only solution to the Darwin model with zero data is $(\boldsymbol{E}, \boldsymbol{H}) = (0, 0)$, which proves uniqueness. ■

6.4.3 Notes on asymptotic analysis

A fundamental issue regarding the approximate models is, how well do they match with the exact Maxwell equations? This issue has been addressed in [97], and we sketch the main results below. For the sake of simplicity, we assume that the medium is homogeneous (vacuum), with $\varepsilon_0 = \mu_0 = 1$; and that the domain Ω is topologically trivial with a connected boundary, so that $\boldsymbol{Z}_N(\Omega) = \boldsymbol{Z}_T(\Omega) = \{0\}$. However, none of these assumptions is essential.

One performs a scaling of the original equations as in §1.4.2, with respect to a "small parameter" $\eta = \overline{v}/c$, where $\overline{v}$ is the characteristic velocity. Then, one studies (formal) asymptotic expansions of the electromagnetic fields and data, of the form

$$\boldsymbol{E} = \sum_{k\geq 0} \eta^k \boldsymbol{E}^k, \qquad \boldsymbol{H} = \sum_{k\geq 0} \eta^k \boldsymbol{H}^k, \tag{6.56}$$

$$\varrho = \sum_{k\geq 0} \eta^k \varrho^k, \qquad \boldsymbol{J} = \sum_{k\geq 0} \eta^k \boldsymbol{J}^k. \tag{6.57}$$

Using this ansatz leads to a sequence of relations among $(\boldsymbol{E}^k)_{k\geq 0}$, $(\boldsymbol{H}^k)_{k\geq 0}$, the data $(\varrho^k)_{k\geq 0}$, $(\boldsymbol{J}^k)_{k\geq 0}$ and the initial conditions $(\boldsymbol{E}_0, \boldsymbol{H}_0)$. Given an integer K, it is possible to estimate the difference between the exact electromagnetic fields and the finite sums $(\sum_{0\leq k\leq K} \eta^k \boldsymbol{E}^k, \sum_{0\leq k\leq K} \eta^k \boldsymbol{H}^k)$, under some suitable conditions on the initial conditions $(\boldsymbol{E}_0, \boldsymbol{H}_0)$, the data $\boldsymbol{J}$ and ϱ and their time derivatives at $t = 0$. With the help of an energy-like conservation equation that uses the parameter η, one finds that, for $t \geq 0$,

$$\begin{array}{l} \|\boldsymbol{E}(t) - \sum_{0\leq k\leq K} \eta^k \boldsymbol{E}^k(t)\| \leq C_K(t)\eta^{K+1}, \\ \|\boldsymbol{H}(t) - \sum_{0\leq k\leq K} \eta^k \boldsymbol{H}^k(t)\| \leq D_K(t)\eta^{K+1}. \end{array} \tag{6.58}$$

Above, $C_K(t)$ and $D_K(t)$ are suitable functions of the norms of some high-order terms and of the initial data, namely

$$\begin{cases} \|(\boldsymbol{E}^{K+1}(t), \boldsymbol{H}^{K+1}(t))\|_{\boldsymbol{L}^2(\Omega)\times\boldsymbol{L}^2(\Omega)}, \\ \Big(\|(\partial_t \boldsymbol{E}^{K+1}(s), \partial_t \boldsymbol{H}^{K+1}(s))\|_{\boldsymbol{L}^2(\Omega)\times\boldsymbol{L}^2(\Omega)}\Big)_{s\leq t}, \\ \|(\boldsymbol{E}^{K+1}(0), \boldsymbol{H}^{K+1}(0))\|_{\boldsymbol{L}^2(\Omega)\times\boldsymbol{L}^2(\Omega)}, \\ \Big(\|\boldsymbol{J}(s) - \sum_{0\leq k\leq K+1} \eta^k \boldsymbol{J}^k(s)\|_{\boldsymbol{L}^2(\Omega)}\Big)_{s\leq t}. \end{cases}$$

Let us give here the sketch of the proof. Details can be found in [97] under a simplifying assumption (see Remark 6.4.8); generalising to the present situation is no difficulty. Using the above-mentioned scaling, we get that the Maxwell's equations can be written in dimensionless variables, as in §1.4.2. Replacing, in Maxwell's equations, $\boldsymbol{E}(t)$, $\boldsymbol{H}(t)$, $\varrho(t)$, $\boldsymbol{J}(t)$ with their expansions (6.56)–(6.57), we obtain that $\boldsymbol{E}^k(t)$ and $\boldsymbol{H}^k(t)$ must satisfy (formally) the following relations, for $k \geq 1$:

$$\begin{cases} \dfrac{\partial \boldsymbol{E}^{k-1}}{\partial t} - \mathbf{curl}\, \boldsymbol{H}^k = -\boldsymbol{J}^k \text{ in } \Omega,\ t > 0, \\ \dfrac{\partial \boldsymbol{H}^{k-1}}{\partial t} + \mathbf{curl}\, \boldsymbol{E}^k = 0 \text{ in } \Omega, \qquad t > 0, \\ \operatorname{div} \boldsymbol{E}^k = \varrho^k \text{ in } \Omega, \qquad t > 0, \\ \operatorname{div} \boldsymbol{H}^k = 0 \text{ in } \Omega, \qquad t > 0\,; \end{cases} \tag{6.59}$$

whereas for the particular case $k = 0$, we get:

$$\begin{cases} \mathbf{curl}\, \boldsymbol{H}^0 = \boldsymbol{J}^0 \text{ in } \Omega,\ t > 0, \\ \mathbf{curl}\, \boldsymbol{E}^0 = 0 \text{ in } \Omega, \quad t > 0, \\ \operatorname{div} \boldsymbol{E}^0 = \varrho^0 \text{ in } \Omega, \quad t > 0, \\ \operatorname{div} \boldsymbol{H}^0 = 0 \text{ in } \Omega, \quad t > 0\,. \end{cases} \tag{6.60}$$

Similarly, boundary conditions for the expansions $\boldsymbol{E}^k(t)$ and $\boldsymbol{H}^k(t)$ are easily deduced from those on $\boldsymbol{E}(t)$ and $\boldsymbol{H}(t)$; for instance, from the perfect conductor boundary condition $\boldsymbol{E} \times \boldsymbol{n} = 0$, $\boldsymbol{H} \cdot \boldsymbol{n} = 0$, we get $\boldsymbol{E}^k \times \boldsymbol{n} = 0$, $\boldsymbol{H}^k \cdot \boldsymbol{n} = 0$, for all $k \geq 0$.

Thus, it can be proved that Eqs. (6.59)–(6.60) have a unique solution. For $k = 0$, Eq. (6.60) appears as the combination of an electrostatic and a magnetostatic problem at each time t; one deduces the existence of a unique solution $(\boldsymbol{E}^0(t), \boldsymbol{H}^0(t))$ for all t, according to §§6.1 and 6.2. Similarly, given $(\boldsymbol{E}^{k-1}, \boldsymbol{H}^{k-1})$, Eq. (6.59) shows that $\boldsymbol{E}^k(t)$ and $\boldsymbol{H}^k(t)$ are the solutions to an electrostatic-like and a magnetostatic-like problem for all t, these problems being decoupled. By induction, one infers the existence of a unique solution $(\boldsymbol{E}^k, \boldsymbol{H}^k)$ for all $k \geq 0$.

The second step is now to investigate the convergence of the asymptotic expansions of the electromagnetic fields. We introduce the difference between the exact electromagnetic fields and the finite sums,

$$\boldsymbol{e} := \boldsymbol{E} - \sum_{0 \leq k \leq K+1} \eta^k \boldsymbol{E}^k, \quad \boldsymbol{h} := \boldsymbol{H} - \sum_{0 \leq k \leq K+1} \eta^k \boldsymbol{H}^k\,;$$

and we assume that the series in (6.57, right) converges fast enough, so that:

$$\boldsymbol{J} - \sum_{0 \leq k \leq K+1} \eta^k \boldsymbol{J}^k = \eta^{K+2}\, \boldsymbol{\psi}_{K+1}, \quad \text{with } \boldsymbol{\psi}_{K+1} \text{ of order} \geq 0 \text{ in } \eta.$$

Using the Maxwell's equations written in dimensionless variables as in §1.4.2, we find

$$\begin{cases} \eta \dfrac{\partial \boldsymbol{e}}{\partial t} - \mathbf{curl}\, \boldsymbol{h} = -\eta^{K+2} \left(\dfrac{\partial \boldsymbol{E}^{K+1}}{\partial t} + \boldsymbol{\psi}_{K+1}(t) \right) \\ \eta \dfrac{\partial \boldsymbol{h}}{\partial t} + \mathbf{curl}\, \boldsymbol{e} = -\eta^{K+2}\, \dfrac{\partial \boldsymbol{H}^{K+1}}{\partial t} \end{cases}$$

with the *ad hoc* boundary conditions. Using a standard *a priori* estimate for the solution of this system together with a variant of Gronwall's lemma [62, Lemma II.4.9], and denoting $w(t)^2 := \|\boldsymbol{e}(t)\|^2 + \|\boldsymbol{h}(t)\|^2$, one finds that, for $t \geq 0$,

$$w(t) \leq w(0) + \eta^{K+1} \int_0^t \{\|\frac{\partial \boldsymbol{E}^{K+1}}{\partial t}(s) + \boldsymbol{\psi}_{K+1}(s)\|^2 + \|\frac{\partial \boldsymbol{H}^{K+1}}{\partial t}(s)\|^2\}^{1/2} ds\,.$$

The last part of the proof consists in evaluating $w(0)$. Assuming $\boldsymbol{E}^0(0) = \boldsymbol{E}(0)$ and $\boldsymbol{H}^0(0) = \boldsymbol{H}(0)$, together with

$$\partial_t^\ell \boldsymbol{J}^0(0) = 0 \text{ in } \Omega, \quad 1 \le \ell \le K\,;$$
$$\partial_t^\ell \varrho^j(0) = 0 \text{ in } \Omega, \quad \partial_t^\ell \boldsymbol{J}^j(0) \in \boldsymbol{H}_0(\mathbf{curl}\,0, \Omega), \quad 1 \le j \le K,\ 0 \le \ell \le K-j,$$

one shows, iteratively, that $\partial_t^\ell \boldsymbol{H}^0(0) = 0$ for $1 \le \ell \le K$ and $\partial_t^\ell \boldsymbol{E}^j(0) = \partial_t^\ell \boldsymbol{H}^j(0) = 0$ for $1 \le j \le K,\ 0 \le \ell \le K-j$. It follows that

$$\begin{aligned}
&\boldsymbol{e}(0) = -\eta^{K+1}\,\boldsymbol{E}^{K+1}(0), \quad \boldsymbol{h}(0) = -\eta^{K+1}\,\boldsymbol{H}^{K+1}(0)\,;\\
&w(0) = \eta^{K+1}(\|(\boldsymbol{E}^{K+1}(0)\|^2 + \|\boldsymbol{H}^{K+1}(0))\|^2)^{1/2}\,;\\
&w(t) \le \eta^{K+1}\,\tilde{C}_{K+1}(t), \quad \text{for a certain function } \tilde{C}_{K+1}(t).
\end{aligned}$$

Finally, noting that

$$\boldsymbol{E}(t) \;-\; \sum_{0\le k\le K} \eta^k \boldsymbol{E}^k(t) = \boldsymbol{e}(t) + \eta^{K+1}\,\boldsymbol{E}^{K+1}(t),$$

one bounds

$$\|\boldsymbol{E}(t) \;-\; \sum_{0\le k\le K} \eta^k \boldsymbol{E}^k(t)\| \le w(t) + \eta^{K+1}\,\|\boldsymbol{E}^{K+1}(t)\| = \eta^{K+1}\,C_K(t),$$

for a certain function $C_K(t)$, which is (6.58, top); the bottom part of the estimate is proved likewise.

Considering first the static models and denoting their solution by $\boldsymbol{E}_S$ and $\boldsymbol{H}_S$, one finds, by identification, that $\boldsymbol{E}_S = \boldsymbol{E}^0$ and $\boldsymbol{H}_S = \boldsymbol{H}^0$, so that one may write

$$\|\boldsymbol{E}(t) - \boldsymbol{E}_S(t)\| \le C_0(t)\eta\,, \|\boldsymbol{H}(t) - \boldsymbol{H}_S(t)\| \le D_0(t)\eta\,.$$

One can also perform a scaling like that above on the electric quasi-static model. Denoting its solution by $(\boldsymbol{E}_{QS}, \boldsymbol{H}_{QS})$, one finds, by direct computations, $\boldsymbol{E}_{QS} = \boldsymbol{E}^0 + \text{h.o.t.}$ and $\boldsymbol{H}_{QS} = \boldsymbol{H}^0 + \eta\boldsymbol{H}^1 + \text{h.o.t.}$, so that

$$\|\boldsymbol{E}(t) - \boldsymbol{E}_{QS}(t)\| \le C_0(t)\eta\,, \|\boldsymbol{H}(t) - \boldsymbol{H}_{QS}(t)\| \le D_1(t)\eta^2\,.$$

Lastly, one can perform a scaling on the Darwin model. This time, with obvious notations, one finds $\boldsymbol{E}_D = \boldsymbol{E}^0 + \eta\boldsymbol{E}^1 + \eta^2\boldsymbol{E}^2 + \text{h.o.t.}$ and $\boldsymbol{H}_D = \boldsymbol{H}^0 + \eta\boldsymbol{H}^1 + \text{h.o.t.}$, so that

$$\|\boldsymbol{E}(t) - \boldsymbol{E}_D(t)\| \le C_2(t)\eta^3\,, \|\boldsymbol{H}(t) - \boldsymbol{H}_D(t)\| \le D_1(t)\eta^2\,.$$

Remark 6.4.7 *As explained in §§1.4.3 and 6.4.1, the electric quasi-static model can be derived by neglecting the time derivative of the magnetic field $\partial_t\boldsymbol{H}$ in the Maxwell's equations. Under these conditions, one can, as above, relate the Darwin model solutions to the solutions $(\boldsymbol{E}_{QS}, \boldsymbol{H}_{QS})$, or alternatively, prove that the unique solution $(\boldsymbol{E}_{QS}, \boldsymbol{H}_{QS})$ has the following properties:*

- $\boldsymbol{E}_{QS} = -\,\mathbf{grad}\,\phi$ *is characterized as the solution to an electrostatic-like problem,*

- $\boldsymbol{H}_{QS}$ *is the divergence-free solution to a vector Laplace-like problem,*

so that $\boldsymbol{E}_{QS}$ *is only longitudinal and is equal to the longitudinal part of* $\boldsymbol{E}_D$*, and* $\boldsymbol{H}_{QS} = \boldsymbol{H}_D$*. Hence, the electric quasi-static and Darwin models differ only in the approximation of the transverse part of the electric field, which is neglected in the former model. This also proves that* $\boldsymbol{H}_{QS}$ *(like* $\boldsymbol{H}_D$*) is a second-order approximation in* η*, whereas* $\boldsymbol{E}_{QS}$ *(unlike* $\boldsymbol{E}_D$*) is only a first-order one.*

Remark 6.4.8 *If it holds that:*

$$\varrho = \varrho^0 \text{ independent of } \eta\,; \quad \boldsymbol{J} = \boldsymbol{J}^0 + \eta \mathbf{J}^1,$$

which is a particular case of (6.57)*, then the solutions to the electric quasi-static and Darwin models are exactly*

$$\boldsymbol{E}_{QS} = \boldsymbol{E}^0,\ \boldsymbol{H}_{QS} = \boldsymbol{H}^0 + \eta \boldsymbol{H}^1\,; \quad \boldsymbol{E}_D = \boldsymbol{E}^0 + \eta \boldsymbol{E}^1 + \eta^2 \boldsymbol{E}^2,\ \boldsymbol{H}_D = \boldsymbol{H}^0 + \eta \boldsymbol{H}^1.$$

This is the case investigated in [97].

To summarize, one concludes that one gains one order in $\boldsymbol{H}$, going from the static models to the electric quasi-static model, respectively one order in $\boldsymbol{H}$ and two orders in $\boldsymbol{E}$, going from the static models to the Darwin model.

6.4.4 Other boundary conditions – Exterior problem

When one prescribes another boundary condition, such as the Silver–Müller absorbing boundary condition on the boundary, or on a part of the boundary, it is still possible to build approximate models (static, quasi-static or Darwin). However, for the Darwin model, choosing the relevant boundary condition for the two parts of the electric field $\boldsymbol{E}^L$ and $\boldsymbol{E}^T$ becomes rather involved. We refer to [177, 178, 84] for detailed studies on this topic.
Finally, we mention that the exterior Darwin model (with perfect conductor boundary condition) is solved in [108].

7

Analyses of exact problems: second-order models

This chapter is devoted to an alternative, second-order formulation of the Maxwell's equations. We rigorously justify the process we outlined in §1.5.3. This new formulation is especially relevant for computational applications, as it admits several variational formulations, which can be simulated by versatile finite element methods [23, 82, 83]. Our attention will be focused on three issues: equivalence of the second-order equations with the original, first-order equations studied in Chapter 5, the well-posedness of the new formulation and the regularity of its solution, as we did in that chapter. We also study how to take into account the conditions on the divergence of the fields, incorporating them explicitly at some point in the variational formulations. To these ends, we shall again rely on the mathematical tools introduced in Chapters 2, 3 and 4, as well as on the specific properties of the spaces of electromagnetic fields introduced in Chapter 6.

7.1 First-order to second-order equations

We shall start from the first-order Maxwell equations set in a domain Ω, made of a perfect medium, and fix the final time $T > 0$. In particular, we choose to solve problems set in a domain: so, the equations include boundary conditions, which must be handled with some care. By extension, the case of Maxwell's equations set in $\mathbb{R}^3$ is covered by the study below, precisely in the subsection devoted to a domain encased in a perfect conductor. We consider the equations

$$\mathbb{e}\frac{\partial \boldsymbol{E}}{\partial t} - \mathbf{curl}\,\boldsymbol{H} = -\boldsymbol{J}, \quad \text{on } \Omega,\ t \in]0,T[\tag{7.1}$$

$$\mathbb{\mu}\frac{\partial \boldsymbol{H}}{\partial t} + \mathbf{curl}\,\boldsymbol{E} = 0, \quad \text{on } \Omega,\ t \in]0,T[. \tag{7.2}$$

We keep the equations on the divergence of the fields

$$\operatorname{div}(\mathbb{e}\boldsymbol{E}) = \varrho, \quad \text{on } \Omega,\ t \in]0,T[\tag{7.3}$$
$$\operatorname{div}(\mathbb{\mu}\boldsymbol{H}) = 0, \quad \text{on } \Omega,\ t \in]0,T[, \tag{7.4}$$

and the initial condition

$$\boldsymbol{E}(0) = \boldsymbol{E}_0,\ \boldsymbol{H}(0) = \boldsymbol{H}_0 \ \text{ on } \Omega. \tag{7.5}$$

Finally, assume that the conditions (5.10) on $\mathbb{e}$ and $\mathbb{\mu}$ are met.

7.1.1 Semi-classical approach

Differentiating first in the sense of distributions in space and time, one easily finds decoupled equations in $\boldsymbol{E}$ and $\boldsymbol{H}$

$$\mathbb{e}\frac{\partial^2 \boldsymbol{E}}{\partial t^2} + \mathbf{curl}\,\mathbb{\mu}^{-1}\,\mathbf{curl}\,\boldsymbol{E} = -\frac{\partial \boldsymbol{J}}{\partial t} \qquad \text{in } \boldsymbol{D}'(]0,T[\times\Omega), \tag{7.6}$$
$$\mathbb{\mu}\frac{\partial^2 \boldsymbol{H}}{\partial t^2} + \mathbf{curl}\,\mathbb{e}^{-1}\,\mathbf{curl}\,\boldsymbol{H} = \mathbf{curl}\,\mathbb{e}^{-1}\boldsymbol{J} \ \text{ in } \boldsymbol{D}'(]0,T[\times\Omega). \tag{7.7}$$

These are vector wave equations.
Second, *assuming* that we can consider the trace of Ampère's and Faraday's laws at time $t = 0$, we obtain:

$$\boldsymbol{E}'(0) = \boldsymbol{E}_1, \quad \text{with } \boldsymbol{E}_1 := \mathbb{e}^{-1}\left(\mathbf{curl}\,\boldsymbol{H}_0 - \boldsymbol{J}(0)\right), \tag{7.8}$$
$$\boldsymbol{H}'(0) = \boldsymbol{H}_1, \quad \text{with } \boldsymbol{H}_1 := -\mathbb{\mu}^{-1}\,\mathbf{curl}\,\boldsymbol{E}_0. \tag{7.9}$$

Third, when the medium is encased in a perfect conductor, we keep the boundary condition (5.9) on $\boldsymbol{E}$. Furthermore, considering the trace of Ampère's law on the boundary and *assuming* that one can differentiate in time there, one finds

$$\mathbb{e}^{-1}(\mathbf{curl}\,\boldsymbol{H} - \boldsymbol{J})(t) \times \boldsymbol{n} = 0 \ \text{ on } \Gamma, \quad t \in]0,T[. \tag{7.10}$$

More precisely,[1] in conjunction with Eq. (7.7), one *assumes* that, for $t \in]0,T[$, $\mathbb{e}^{-1}(\mathbf{curl}\,\boldsymbol{H} - \boldsymbol{J})(t) \in \boldsymbol{H}(\mathbf{curl},\Omega)$, and that it holds that

$$\forall \boldsymbol{v} \in \boldsymbol{H}(\mathbf{curl},\Omega),\ t \in]0,T[,\ (\mathbf{curl}\,\mathbb{e}^{-1}(\mathbf{curl}\,\boldsymbol{H} - \boldsymbol{J})(t)|\boldsymbol{v}) = (\mathbb{e}^{-1}(\mathbf{curl}\,\boldsymbol{H} - \boldsymbol{J})(t)|\,\mathbf{curl}\,\boldsymbol{v}). \tag{7.11}$$

Indeed, integrating by parts in (7.11) yields

$$\forall \boldsymbol{v} \in \boldsymbol{H}(\mathbf{curl},\Omega),\ t \in]0,T[,\ {}_{\gamma}\langle \mathbb{e}^{-1}(\mathbf{curl}\,\boldsymbol{H}(t) - \boldsymbol{J}(t)) \times \boldsymbol{n}, \boldsymbol{v}_{\top}\rangle_{\pi} = 0,$$

which is precisely (7.10).

[1] The other way around (see §7.3) the conditions on $\mathbb{e}^{-1}(\mathbf{curl}\,\boldsymbol{H} - \boldsymbol{J})$ allow one to recover the perfect conductor boundary condition on $\boldsymbol{E}$ by integrating in time, with the help of Proposition 2.3.4.

On the other hand, one can similarly handle the truncated interior problem, with an absorbing boundary condition (ABC) on the artificial boundary Γ_A. Recall that in this case, $\Gamma = \Gamma_P \cup \Gamma_A$, with $\partial\Gamma_P \cap \partial\Gamma_A \neq \emptyset$, and we assume that the medium is homogeneous in a neighborhood of Γ_A. The ABC writes

$$\boldsymbol{E}(t) \times \boldsymbol{n} + \sqrt{\frac{\mu}{\varepsilon}}\boldsymbol{H}_\top(t) = \boldsymbol{g}^\star(t) \text{ on } \Gamma_A,\ t \in]0,T[. \tag{7.12}$$

Equations on Ω remain unchanged, including the initial conditions (7.5). Then, the boundary conditions (5.9) and (7.10) hold on Γ_P. On the other hand, on the artificial boundary, one builds, in the same spirit as (7.10), the conditions

$$\frac{\partial \boldsymbol{E}}{\partial t}(t) \times \boldsymbol{n} - \frac{1}{\sqrt{\varepsilon\mu}}(\mathbf{curl}\,\boldsymbol{E})_\top(t) = \frac{\partial \boldsymbol{g}^\star}{\partial t}(t) \text{ on } \Gamma_A,\ t \in]0,T[\tag{7.13}$$

$$\frac{\partial \boldsymbol{H}}{\partial t}(t) \times \boldsymbol{n} - \frac{1}{\sqrt{\varepsilon\mu}}(\mathbf{curl}\,\boldsymbol{H} - \boldsymbol{J})_\top(t) = \frac{\partial \boldsymbol{k}^\star}{\partial t}(t) \text{ on } \Gamma_A,\ t \in]0,T[, \tag{7.14}$$

with data $\boldsymbol{g}^\star$ and $\boldsymbol{k}^\star = \sqrt{\varepsilon/\mu}\,\boldsymbol{g}^\star \times \boldsymbol{n}$.

7.1.2 Variational approach

In the spirit of (5.1), we require

$$\begin{aligned}
&\boldsymbol{E} \in L^2(0,T;\boldsymbol{H}(\mathbf{curl},\Omega)),\ \boldsymbol{E}' \in L^2(0,T;\boldsymbol{L}^2(\Omega))\,;\\
&\boldsymbol{H} \in L^2(0,T;\boldsymbol{H}(\mathbf{curl},\Omega)),\ \boldsymbol{H}' \in L^2(0,T;\boldsymbol{L}^2(\Omega))\,;\\
&\boldsymbol{J} \in L^2(0,T;\boldsymbol{L}^2(\Omega)).
\end{aligned}$$

Note that we add the initial conditions (7.8-7.9) as before.
Consider first that the medium is encased in a perfect conductor. Then, we include the boundary condition in the requirement for the electric field, namely (cf. (5.2))

$$\boldsymbol{E} \in L^2(0,T;\boldsymbol{H}_0(\mathbf{curl},\Omega)).$$

Let us build the second-order variational formulation for the magnetic field. To begin with, one can reformulate Ampère's law (7.1) as

$$\begin{aligned}
&\forall \varphi \in \mathcal{D}(]0,T[),\ \forall \boldsymbol{v} \in \boldsymbol{L}^2(\Omega),\\
&\int_0^T \left\{(\boldsymbol{E}(t)|\boldsymbol{v})\,\varphi'(t) + (\mathfrak{e}^{-1}\,\mathbf{curl}\,\boldsymbol{H}(t)|\boldsymbol{v})\,\varphi(t)\right\} dt = \int_0^T (\mathfrak{e}^{-1}\boldsymbol{J}(t)|\boldsymbol{v})\,\varphi(t)\,dt.
\end{aligned}$$

In particular,

$$\begin{aligned}
&\forall \varphi \in \mathcal{D}(]0,T[),\ \forall \boldsymbol{w} \in \boldsymbol{H}(\mathbf{curl},\Omega),\\
&\int_0^T \left\{(\boldsymbol{E}(t)|\,\mathbf{curl}\,\boldsymbol{w})\,\varphi'(t) + (\mathfrak{e}^{-1}\,\mathbf{curl}\,\boldsymbol{H}(t)|\,\mathbf{curl}\,\boldsymbol{w})\,\varphi(t)\right\} dt\\
&\qquad\qquad = \int_0^T (\mathfrak{e}^{-1}\boldsymbol{J}(t)|\,\mathbf{curl}\,\boldsymbol{w})\,\varphi(t)\,dt.
\end{aligned}$$

On the other hand, according to Faraday's law (7.2), knowing that $\boldsymbol{E}(t)$ belongs to $\boldsymbol{H}_0(\mathbf{curl}, \Omega)$ for all t, we find, by integration by parts in space and time,

$$\begin{aligned}\int_0^T (\boldsymbol{E}(t)|\,\mathbf{curl}\,\boldsymbol{w})\,\varphi'(t)\,dt &= \int_0^T (\mathbf{curl}\,\boldsymbol{E}(t)|\boldsymbol{w})\,\varphi'(t)\,dt \\ &= -\int_0^T (\mathbb{\mu}\boldsymbol{H}'(t)|\boldsymbol{w})\,\varphi'(t)\,dt = \int_0^T (\mathbb{\mu}\boldsymbol{H}(t)|\boldsymbol{w})\,\varphi''(t)\,dt. \quad (7.15)\end{aligned}$$

Hence, we conclude that

$$\begin{aligned}&\forall\varphi \in \mathcal{D}(]0,T[),\ \forall\boldsymbol{w} \in \boldsymbol{H}(\mathbf{curl}, \Omega), \\ &\int_0^T \left\{(\mathbb{\mu}\boldsymbol{H}(t)|\boldsymbol{w})\,\varphi''(t) + (\mathbb{\varepsilon}^{-1}\,\mathbf{curl}\,\boldsymbol{H}(t)|\,\mathbf{curl}\,\boldsymbol{w})\,\varphi(t)\right\} dt \\ &\qquad\qquad = \int_0^T (\mathbb{\varepsilon}^{-1}\boldsymbol{J}(t)|\,\mathbf{curl}\,\boldsymbol{w})\,\varphi(t)\,dt.\end{aligned} \quad (7.16)$$

Equivalently,

$$\begin{aligned}&\forall\boldsymbol{w} \in \boldsymbol{H}(\mathbf{curl}, \Omega), \\ &\frac{d^2}{dt^2}\left\{(\mathbb{\mu}\boldsymbol{H}(t)|\boldsymbol{w})\right\} + (\mathbb{\varepsilon}^{-1}\,\mathbf{curl}\,\boldsymbol{H}(t)|\,\mathbf{curl}\,\boldsymbol{w}) \\ &\qquad\qquad = (\mathbb{\varepsilon}^{-1}\boldsymbol{J}(t)|\,\mathbf{curl}\,\boldsymbol{w}) \text{ in } \mathcal{D}'(]0,T[).\end{aligned} \quad (7.17)$$

To build the second-order variational formulation for the electric field, we proceed similarly. Let us start with Faraday's law (7.2)

$$\begin{aligned}&\forall\varphi \in \mathcal{D}(]0,T[),\ \forall\boldsymbol{v} \in \boldsymbol{L}^2(\Omega), \\ &\int_0^T \left\{-(\boldsymbol{H}(t)|\boldsymbol{v})\,\varphi'(t) + (\mathbb{\mu}^{-1}\,\mathbf{curl}\,\boldsymbol{E}(t)|\boldsymbol{v})\,\varphi(t)\right\} dt = 0.\end{aligned}$$

Next, take $\boldsymbol{v} = \mathbf{curl}\,\boldsymbol{w}$, with $\boldsymbol{w} \in \boldsymbol{H}_0(\mathbf{curl}, \Omega)$, and integrate by parts in space the first term (the boundary condition is needed on $\boldsymbol{w}$, as none is imposed on $\boldsymbol{H}(t)$). Using Ampère's law (7.1) and finally integrating in time, we find:

$$\begin{aligned}-\int_0^T (\boldsymbol{H}(t)|\,\mathbf{curl}\,\boldsymbol{w})\,\varphi'(t)\,dt &= -\int_0^T (\mathbf{curl}\,\boldsymbol{H}(t)|\boldsymbol{w})\,\varphi'(t)\,dt \\ &= \int_0^T (\mathbb{\varepsilon}\boldsymbol{E}(t)|\boldsymbol{w})\,\varphi''(t)\,dt - \int_0^T (\boldsymbol{J}(t)|\boldsymbol{w})\,\varphi'(t)\,dt. \quad (7.18)\end{aligned}$$

For the electric field, we conclude that

$$\begin{aligned}&\forall\varphi \in \mathcal{D}(]0,T[),\ \forall\boldsymbol{w} \in \boldsymbol{H}_0(\mathbf{curl}, \Omega), \\ &\int_0^T \left\{(\mathbb{\varepsilon}\boldsymbol{E}(t)|\boldsymbol{w})\,\varphi''(t) + (\mathbb{\mu}^{-1}\,\mathbf{curl}\,\boldsymbol{E}(t)|\,\mathbf{curl}\,\boldsymbol{w})\,\varphi(t)\right\} dt \\ &\qquad\qquad = \int_0^T (\boldsymbol{J}(t)|\boldsymbol{w})\,\varphi'(t)\,dt.\end{aligned} \quad (7.19)$$

Or,

$$\begin{aligned}
&\forall \boldsymbol{w} \in \boldsymbol{H}_0(\mathbf{curl}, \Omega),\\
&\frac{d^2}{dt^2}\left\{(\mathbb{e}\boldsymbol{E}(t)|\boldsymbol{w})\right\} + (\mathbb{m}^{-1}\,\mathbf{curl}\,\boldsymbol{E}(t)|\,\mathbf{curl}\,\boldsymbol{w})\\
&\qquad\qquad = -\frac{d}{dt}\left\{(\boldsymbol{J}(t)|\boldsymbol{w})\right\} \text{ in } \mathcal{D}'(]0,T[).
\end{aligned} \tag{7.20}$$

For the truncated interior problem, one proceeds very similarly, bearing in mind that $\boldsymbol{E}(t)\times\boldsymbol{n}_{|\Gamma_P} = 0$ and $\big(\boldsymbol{E}(t)\times\boldsymbol{n} + (\mu/\varepsilon)^{1/2}\boldsymbol{H}_\top(t)\big)_{|\,\Gamma_A} = \boldsymbol{g}^\star(t)$. For this problem, one requires

$$\boldsymbol{E} \in L^2(0,T;\boldsymbol{H}_{0,\Gamma_P}(\mathbf{curl},\Omega)).$$

Also, when building the second-order variational formulation in $\boldsymbol{H}$, (7.15) comprises boundary terms on Γ_A: for all $\boldsymbol{w} \in \boldsymbol{H}(\mathbf{curl},\Omega)$,

$$\begin{aligned}
&\int_0^T (\boldsymbol{E}(t)|\,\mathbf{curl}\,\boldsymbol{w})\,\varphi'(t)\,dt = \int_0^T \Big\{(\mathbf{curl}\,\boldsymbol{E}(t)|\boldsymbol{w}) + {}_{\gamma_A^0}\langle \boldsymbol{E}(t)\times\boldsymbol{n}, \boldsymbol{w}_\top\rangle_{\pi_A}\Big\}\,\varphi'(t)\,dt\\
&= \int_0^T (\mathbb{m}\boldsymbol{H}(t)|\boldsymbol{w})\,\varphi''(t)\,dt + \int_0^T \Big\{{}_{\gamma_A^0}\langle \boldsymbol{g}^\star(t) - \sqrt{\frac{\mu}{\varepsilon}}\boldsymbol{H}_\top(t), \boldsymbol{w}_\top\rangle_{\pi_A}\Big\}\varphi'(t)\,dt.
\end{aligned}$$

For the second-order problem on the magnetic field, we readily arrive at

$$\begin{aligned}
&\forall \varphi \in \mathcal{D}(]0,T[),\ \forall \boldsymbol{w} \in \boldsymbol{H}(\mathbf{curl},\Omega),\\
&\int_0^T \Big\{(\mathbb{m}\boldsymbol{H}(t)|\boldsymbol{w})\,\varphi''(t) - \sqrt{\frac{\mu}{\varepsilon}}{}_{\gamma_A^0}\langle \boldsymbol{H}_\top(t), \boldsymbol{w}_\top\rangle_{\pi_A}\,\varphi'(t)\\
&\qquad\qquad + (\mathbb{e}^{-1}\,\mathbf{curl}\,\boldsymbol{H}(t)|\,\mathbf{curl}\,\boldsymbol{w})\,\varphi(t)\Big\}\,dt\\
&= \int_0^T \Big\{(\mathbb{e}^{-1}\boldsymbol{J}(t)|\,\mathbf{curl}\,\boldsymbol{w})\,\varphi(t) + \sqrt{\frac{\mu}{\varepsilon}}{}_{\gamma_A^0}\langle \boldsymbol{k}^\star(t)\times\boldsymbol{n}, \boldsymbol{w}_\top\rangle_{\pi_A}\varphi'(t)\Big\}\,dt,
\end{aligned} \tag{7.21}$$

assuming that we can split the duality brackets on Γ_A([2]). Equivalently,

$$\begin{aligned}
&\forall \boldsymbol{w} \in \boldsymbol{H}(\mathbf{curl},\Omega),\\
&\frac{d^2}{dt^2}\left\{(\mathbb{m}\boldsymbol{H}(t)|\boldsymbol{w})\right\} + \sqrt{\frac{\mu}{\varepsilon}}\frac{d}{dt}\Big\{{}_{\gamma_A^0}\langle \boldsymbol{H}_\top(t), \boldsymbol{w}_\top\rangle_{\pi_A}\Big\}\\
&\qquad\qquad + (\mathbb{e}^{-1}\,\mathbf{curl}\,\boldsymbol{H}(t)|\,\mathbf{curl}\,\boldsymbol{w})\\
&\quad = (\mathbb{e}^{-1}\boldsymbol{J}(t)|\,\mathbf{curl}\,\boldsymbol{w}) - \sqrt{\frac{\mu}{\varepsilon}}\frac{d}{dt}\Big\{{}_{\gamma_A^0}\langle \boldsymbol{k}^\star(t)\times\boldsymbol{n}, \boldsymbol{w}_\top\rangle_{\pi_A}\Big\} \text{ in } \mathcal{D}'(]0,T[).
\end{aligned} \tag{7.22}$$

[2] From the definition $\boldsymbol{k}^\star = \sqrt{\varepsilon/\mu}\,\boldsymbol{g}^\star\times\boldsymbol{n}$, and because $\boldsymbol{g}^\star$ is tangential, it holds that $\sqrt{\mu/\varepsilon}\,\boldsymbol{k}^\star\times\boldsymbol{n} = -\boldsymbol{g}^\star$. Hence, the boundary term in the r.h.s. of (7.21) also writes

$$-\int_0^T {}_{\gamma_A^0}\langle \boldsymbol{g}^\star, \boldsymbol{w}_\top\rangle_{\pi_A}\varphi'(t)\,dt.$$

When building the second-order variational formulation in the electric field, (7.18) also comprises boundary terms on Γ_A: for all $\boldsymbol{w} \in \boldsymbol{H}_{0,\Gamma_P}(\mathbf{curl}, \Omega)$,

$$\begin{aligned}
-\int_0^T (\boldsymbol{H}(t)|\,\mathbf{curl}\,\boldsymbol{w})\,\varphi'(t)\,dt &= \int_0^T \left\{-(\mathbf{curl}\,\boldsymbol{H}(t)|\boldsymbol{w}) + {}_{\gamma_A^0}\langle \overline{\boldsymbol{w}} \times \boldsymbol{n}, \overline{\boldsymbol{H}_{\top}}(t)\rangle_{\pi_A}\right\} \varphi'(t)\,dt \\
&= \int_0^T (\mathbb{e}\boldsymbol{E}(t)|\boldsymbol{w})\,\varphi''(t)\,dt - \int_0^T (\boldsymbol{J}(t)|\boldsymbol{w})\,\varphi'(t)\,dt \\
&\quad + \sqrt{\frac{\varepsilon}{\mu}} \int_0^T \left\{{}_{\gamma_A^0}\langle \overline{\boldsymbol{w}} \times \boldsymbol{n}, \overline{\boldsymbol{g}^\star}(t)\rangle_{\pi_A} - {}_{\gamma_A^0}\langle \overline{\boldsymbol{w}} \times \boldsymbol{n}, \overline{\boldsymbol{E}}(t) \times \boldsymbol{n}\rangle_{\pi_A}\right\} \varphi'(t)\,dt.
\end{aligned}$$

We then obtain

$$\begin{aligned}
&\forall \varphi \in \mathcal{D}(]0,T[),\ \forall \boldsymbol{w} \in \boldsymbol{H}_{0,\Gamma_P}(\mathbf{curl}, \Omega), \\
&\int_0^T \Big\{(\mathbb{e}\boldsymbol{E}(t)|\boldsymbol{w})\,\varphi''(t) - \sqrt{\frac{\varepsilon}{\mu}}\,{}_{\gamma_A^0}\langle \overline{\boldsymbol{w}} \times \boldsymbol{n}, \overline{\boldsymbol{E}}(t) \times \boldsymbol{n}\rangle_{\pi_A} \varphi'(t) \\
&\qquad\qquad + (\mathbb{\mu}^{-1}\,\mathbf{curl}\,\boldsymbol{E}(t)|\,\mathbf{curl}\,\boldsymbol{w})\,\varphi(t)\Big\}\,dt \\
&\quad = \int_0^T \left\{(\boldsymbol{J}(t)|\boldsymbol{w}) - \sqrt{\frac{\varepsilon}{\mu}}\,{}_{\gamma_A^0}\langle \overline{\boldsymbol{w}} \times \boldsymbol{n}, \overline{\boldsymbol{g}^\star}(t)\rangle_{\pi_A}\right\} \varphi'(t)\,dt.
\end{aligned} \tag{7.23}$$

Or,

$$\begin{aligned}
&\forall \boldsymbol{w} \in \boldsymbol{H}_{0,\Gamma_P}(\mathbf{curl}, \Omega), \\
&\frac{d^2}{dt^2}\{(\mathbb{e}\boldsymbol{E}(t)|\boldsymbol{w})\} + \sqrt{\frac{\varepsilon}{\mu}}\frac{d}{dt}\{{}_{\gamma_A^0}\langle \overline{\boldsymbol{w}} \times \boldsymbol{n}, \overline{\boldsymbol{E}}(t) \times \boldsymbol{n}\rangle_{\pi_A}\} \\
&\qquad\qquad + (\mathbb{\mu}^{-1}\,\mathbf{curl}\,\boldsymbol{E}(t)|\,\mathbf{curl}\,\boldsymbol{w}) \\
&\quad = -\frac{d}{dt}\{(\boldsymbol{J}(t)|\boldsymbol{w})\} + \sqrt{\frac{\varepsilon}{\mu}}\frac{d}{dt}\left\{{}_{\gamma_A^0}\langle \overline{\boldsymbol{w}} \times \boldsymbol{n}, \overline{\boldsymbol{g}^\star}(t)\rangle_{\pi_A}\right\} \text{ in } \mathcal{D}'(]0,T[).
\end{aligned} \tag{7.24}$$

Remark 7.1.1 *For both problems, we recover, as side products, Eqs.* (7.6)–(7.7) *in the sense of distributions in space and time. Also, note that, if* $\boldsymbol{J}' \in L^1_{loc}(0,T;\boldsymbol{L}^2(\Omega))$*, one can replace* $\int_0^T (\boldsymbol{J}(t)|\boldsymbol{w})\,\varphi'(t)\,dt$ *in* (7.19) *and* (7.23)*, respectively* $-\{(\boldsymbol{J}(t)|\boldsymbol{w})\}'$ *in* (7.20) *and* (7.24)*, with* $-\int_0^T (\boldsymbol{J}'(t)|\boldsymbol{w})\,\varphi(t)\,dt$*, respectively with* $-(\boldsymbol{J}'(t)|\boldsymbol{w})$*.*

Remark 7.1.2 *From now on, one requires that all traces,* $\partial_t \boldsymbol{g}^\star(t)$*,* $\partial_t \boldsymbol{k}^\star(t)$*,* $\partial_t \boldsymbol{E}(t) \times \boldsymbol{n}_{|\Gamma_A}$ *and* $\partial_t \boldsymbol{H}(t) \times \boldsymbol{n}_{|\Gamma_A}$ *belong to* $\boldsymbol{L}^2_t(\Gamma_A)$ *at all times, so that one can measure the electromagnetic fields on* Γ_A *by integrating their norm squared (see §7.2). According to Remark 5.1.8, this assumption is not restrictive, as it amounts to choosing an artificial boundary without pathological vertices. Anyway, pathological vertices could still be accepted, because one retains the positive property on the boundary term on* Γ_A*, cf.* (5.26)*.*

7.2 Well-posedness of the second-order Maxwell equations

Our aim now is to solve rigorously the second-order time-dependent Maxwell equations, and to obtain well-posedness under some *ad hoc* assumptions on the

data that can be different from the ones required for the first-order equations (see §5.2). For that, we shall use the Lions-Magenes Theorem 4.3.13 or, more precisely, its variant, Corollary 4.3.15. We let $\mathcal{H}$ be a first Hilbert space, with scalar products $(\cdot,\cdot)_{\mathcal{H}}$ or ${}_2(\cdot,\cdot)_{\mathcal{H}}$, whose associated norms are equivalent. We also let $\mathcal{V}$ be a second Hilbert space, with scalar product $(\cdot,\cdot)_{\mathcal{V}}$; $\mathcal{V}$ is continuously imbedded in $\mathcal{H}$, and moreover, $\mathcal{V}$ is dense in $\mathcal{H}$. The abstract form of a second-order time-dependent problem is to find a weak solution $\mathtt{u} \,:\, t \mapsto \mathtt{u}(t)$ with values in $\mathcal{V}$ for $t \in [0,T]$, governed by

$$\begin{cases} \textit{Find } \mathtt{u} \textit{ such that} \\ \forall \mathtt{v} \in \mathcal{V},\ \dfrac{d^2}{dt^2}\left\{{}_2(\mathtt{u}(t),\mathtt{v})_{\mathcal{H}}\right\} + a(\mathtt{u}(t),\mathtt{v}) = (\mathtt{f}(t),\mathtt{v})_{\mathcal{H}} \text{ in } \mathcal{D}'(]0,T[), \\ \mathtt{u}(0) = \mathtt{u}_0 \text{ and } \mathtt{u}'(0) = \mathtt{u}_1. \end{cases}$$

Above, the form a defined on $V \times V$ is Hermitian. We recall that the variational formulation is equivalently written as

$$\begin{aligned} &\forall \varphi \in \mathcal{D}(]0,T[),\ \forall \mathtt{v} \in \mathcal{V}, \\ &\int_0^T \left\{{}_2(\mathtt{u}(t),\mathtt{v})_{\mathcal{H}}\, \varphi''(t) + a(\mathtt{u}(t),\mathtt{v})\, \varphi(t)\right\} dt = \int_0^T (\mathtt{f}(t),\mathtt{v})_{\mathcal{H}}\, \varphi(t)\, dt. \end{aligned}$$

To prove well-posedness, the crucial tool is the so-called *energy inequality*, which allows one to obtain uniform estimates (with respect to the data). In this way, one can construct (approximate) solutions in finite-dimensional vector subspaces of $\mathcal{V}$, and then pass to the limit to prove the existence of the solution.

We recall below how the energy inequality is obtained, because alternate estimates will be needed later on. First, let us add $\nu \|\mathtt{v}\|^2_{\mathcal{H}}$ to both sides of the above variational formulation, with $\nu \geq 0$ chosen so that property (4.15) is fulfilled: namely, ν is such that

$$\mathtt{v} \mapsto (a(\mathtt{v},\mathtt{v}) + \nu \|\mathtt{v}\|^2_{\mathcal{H}})^{1/2}$$

defines a norm on $\mathcal{V}$, which is equivalent to $\|\cdot\|_{\mathcal{V}}$. Then, to derive this energy inequality, one (formally) sets the test function $\mathtt{v}$ to $\mathtt{u}'(t)$:

$${}_2(\mathtt{u}''(t),\mathtt{u}'(t))_{\mathcal{H}} + a(\mathtt{u}(t),\mathtt{u}'(t)) + \nu(\mathtt{u}(t),\mathtt{u}'(t))_{\mathcal{H}} = (\mathtt{f}(t),\mathtt{u}'(t))_{\mathcal{H}} + \nu(\mathtt{u}(t),\mathtt{u}'(t))_{\mathcal{H}}.$$

Integrating in time ($t \in]0,\Theta[$) and noting that the left-hand side is a real number, one finds (with $\delta_0, \delta_1 > 0$):

$$\begin{aligned} &\left[{}_2\|\mathtt{u}'(\Theta)\|^2_{\mathcal{H}} + a(\mathtt{u}(\Theta),\mathtt{u}(\Theta)) + \nu\|\mathtt{u}(\Theta)\|^2_{\mathcal{H}}\right] - \left[{}_2\|\mathtt{u}_1\|^2_{\mathcal{H}} + a(\mathtt{u}_0,\mathtt{u}_0) + \nu\|\mathtt{u}_0\|^2_{\mathcal{H}}\right] \\ &\qquad = 2\int_0^{\Theta} \Re\left\{(\mathtt{f}(t),\mathtt{u}'(t))_{\mathcal{H}} + \nu(\mathtt{u}(t),\mathtt{u}'(t))_{\mathcal{H}}\right\} dt \\ &\qquad \leq \int_0^{\Theta} \left\{\delta_0\|\mathtt{f}(t)\|^2_{\mathcal{H}} + \frac{1}{\delta_0}\|\mathtt{u}'(t)\|^2_{\mathcal{H}} + \nu\delta_1\|\mathtt{u}(t)\|^2_{\mathcal{H}} + \frac{\nu}{\delta_1}\|\mathtt{u}'(t)\|^2_{\mathcal{H}}\right\} dt. \end{aligned}$$

So, we have

$$_2\|\mathtt{u}'(\Theta)\|^2_{\mathcal{H}} + \alpha\,\|\mathtt{u}(\Theta)\|^2_{\mathcal{V}} \le C_{ic} + \int_0^{\Theta} \left\{\delta_0\|\mathtt{f}(t)\|^2_{\mathcal{H}} + \delta_2\|\mathtt{u}(t)\|^2_{\mathcal{V}} + \delta_3\|\mathtt{u}'(t)\|^2_{\mathcal{H}}\right\} dt,$$

where $C_{ic} := {}_2\|\mathtt{u}_1\|^2_{\mathcal{H}} + a(\mathtt{u}_0,\mathtt{u}_0) + \nu\|\mathtt{u}_0\|^2_{\mathcal{H}}$ depends on the initial conditions, $\delta_0 > 0$, $\delta_2 := \nu\delta_1 > 0$, $\delta_3 := (\delta_0)^{-1} + \nu(\delta_1)^{-1} > 0$, and finally, $\alpha > 0$ denotes the comparison parameter of the norms in $\mathcal{V}$, cf. property (4.15). To obtain the energy inequality, one uses Gronwall's lemma.

Lemma 7.2.1 `(Gronwall)` *Let $d \in L^1(0,T;\mathbb{R}^+)$, $e \in L^1(0,\Theta)$ for all $\Theta < T$, C and $\beta_1 \ge 0$, $\beta_2 \ge 0$ be such that*

$$\textit{for a.e. } \Theta \in]0,T[,\ e(\Theta) \le C + \beta_1 \int_0^{\Theta} e(t)\,dt + \beta_2 \int_0^{\Theta} d(t)\,dt.$$

Then, $e \in L^\infty(0,T)$ and $\|e\|_{L^\infty(0,T)} \le \exp(\beta_1 T)\left\{C + \beta_2 \int_0^T d(t)\,dt\right\}$.

In our case, we simply define $e := \|\mathtt{u}'\|^2_{\mathcal{H}} + \|\mathtt{u}\|^2_{\mathcal{V}}$, $d := \|\mathtt{f}\|^2_{\mathcal{H}}$ and $C := C_{ic}$ to conclude that there exists a constant $C_T > 0$ such that the generic energy inequality below holds:

$$\begin{aligned}\|\mathtt{u}\|^2_{W^{1,\infty}(0,T;\mathcal{H})} &+ \|\mathtt{u}\|^2_{L^\infty(0,T;\mathcal{V})} \\ &\le C_T \left\{\|\mathtt{u}_1\|^2_{\mathcal{H}} + \|\mathtt{u}_0\|^2_{\mathcal{V}} + \int_0^T \|\mathtt{f}\|^2_{\mathcal{H}}\,dt\right\}. \qquad (7.25)\end{aligned}$$

7.2.1 In a domain encased in a perfect conductor

This is the cavity problem. The case of Maxwell's equations set in $\mathbb{R}^3$ is addressed here in particular, since the variational formulations and function spaces are identical.

Let us start with the problem in the field $\boldsymbol{E}$. According to (7.19) or (7.20), we set $\mathcal{H}_E = \boldsymbol{L}^2(\Omega)$, endowed with the two scalar products

$$(\boldsymbol{v},\boldsymbol{w})_{\mathcal{H}_E} = (\boldsymbol{v}|\boldsymbol{w}) \text{ and } {}_2(\boldsymbol{v},\boldsymbol{w})_{\mathcal{H}_E} = (\mathbb{e}\boldsymbol{v}|\boldsymbol{w}).$$

The latter one is actually a scalar product, according to the assumptions on the permittivity tensor $\mathbb{e}$, namely thanks to (5.10), which also ensures the equivalence of the associated norms. The data is $\mathtt{f}_E = -\boldsymbol{J}'$. Then, to take into account the perfect conductor boundary condition on $\boldsymbol{E}$, we set $\mathcal{V}_E = \boldsymbol{H}_0(\mathbf{curl},\Omega)$, and the form

$$a_E(\boldsymbol{v},\boldsymbol{w}) = (\mathbb{\mu}^{-1}\,\mathbf{curl}\,\boldsymbol{v}|\,\mathbf{curl}\,\boldsymbol{w}).$$

Let us carry on with the problem in the field $\boldsymbol{H}$. In this instance (see (7.16) or (7.17)), we set $\mathcal{H}_H = \boldsymbol{L}^2(\Omega)$, endowed with

$$(\boldsymbol{v},\boldsymbol{w})_{\mathcal{H}_H} = (\boldsymbol{v}|\boldsymbol{w}) \text{ and } {}_2(\boldsymbol{v},\boldsymbol{w})_{\mathcal{H}_H} = (\mathbb{\mu}\boldsymbol{v}|\boldsymbol{w}).$$

We remark that, in the variational formulation, the right-hand side is not expressed as the generic $(\mathtt{f}(t),\boldsymbol{v})_{\mathcal{H}_H}$. This difficulty is addressed below. In the "magnetic" case, ${}_2(\cdot,\cdot)_{\mathcal{H}_H}$ is a scalar product thanks to the assumptions (5.10) on the permeability tensor $\mathbb{\mu}$. Finally, we set $\mathcal{V}_H = \boldsymbol{H}(\mathbf{curl},\Omega)$, and

$$a_H(\boldsymbol{v},\boldsymbol{w}) = (\mathbb{\varepsilon}^{-1}\,\mathbf{curl}\,\boldsymbol{v}|\,\mathbf{curl}\,\boldsymbol{w}).$$

Lemma 7.2.2 *The field* $\boldsymbol{H}$ *fulfills an energy inequality* (7.25)*, with data* $\mathtt{f} = -\boldsymbol{J}'$.

Proof. As in the introductory part of §7.2, we first find that, for $\Theta \in]0,T[$,

$$\begin{aligned}{}_2\|\boldsymbol{H}'(\Theta)\|^2_{\mathcal{H}_H} + a_H(\boldsymbol{H}(\Theta),\boldsymbol{H}(\Theta)) + \|\boldsymbol{H}(\Theta)\|^2 = C_{ic}\\ +2\int_0^\Theta \Re\{(\mathbb{\varepsilon}^{-1}\boldsymbol{J}(t)|\,\mathbf{curl}\,\boldsymbol{H}'(t))\}\,dt + 2\int_0^\Theta \Re\{(\boldsymbol{H}(t)|\boldsymbol{H}'(t))\}\,dt,\end{aligned} \tag{7.26}$$

where $C_{ic} := {}_2\|\boldsymbol{H}_1\|^2_{\mathcal{H}_H} + a_H(\boldsymbol{H}_0,\boldsymbol{H}_0) + \|\boldsymbol{H}_0\|^2$. To tackle the non-standard term involving the data $\boldsymbol{J}$, we integrate by parts in time:

$$\begin{aligned}2\int_0^\Theta \Re\{(\mathbb{\varepsilon}^{-1}\boldsymbol{J}(t)|\,\mathbf{curl}\,\boldsymbol{H}'(t))\}\,dt = -2\int_0^\Theta \Re\{(\mathbb{\varepsilon}^{-1}\boldsymbol{J}'(t)|\,\mathbf{curl}\,\boldsymbol{H}(t))\}\,dt\\ +2\Re\{(\mathbb{\varepsilon}^{-1}\boldsymbol{J}(\Theta)|\,\mathbf{curl}\,\boldsymbol{H}(\Theta))\} - 2\Re\{(\mathbb{\varepsilon}^{-1}\boldsymbol{J}(0)|\,\mathbf{curl}\,\boldsymbol{H}_0)\}.\end{aligned}$$

The first and last terms can be handled as before: $-2\Re\{(\mathbb{\varepsilon}^{-1}\boldsymbol{J}(0)|\,\mathbf{curl}\,\boldsymbol{H}_0)\}$ is added to C_{ic}, whereas

$$\begin{aligned}-2\int_0^\Theta \Re\{(\mathbb{\varepsilon}^{-1}\boldsymbol{J}'(t)|\,\mathbf{curl}\,\boldsymbol{H}(t))\}\,dt\\ \le \int_0^\Theta \|\mathbb{\varepsilon}^{-1/2}\boldsymbol{J}'(t)\|^2\,dt + \int_0^\Theta (\mathbb{\varepsilon}^{-1}\,\mathbf{curl}\,\boldsymbol{H}(t)|\,\mathbf{curl}\,\boldsymbol{H}(t))\,dt\\ \le \int_0^\Theta \|\mathbb{\varepsilon}^{-1/2}\boldsymbol{J}'(t)\|^2\,dt + \int_0^\Theta \frac{1}{\varepsilon_-}\|\boldsymbol{H}(t)\|^2_{\mathcal{V}_H}\,dt.\end{aligned}$$

Then, we bound the second term by

$$2\Re\{(\mathbb{\varepsilon}^{-1}\boldsymbol{J}(\Theta)|\,\mathbf{curl}\,\boldsymbol{H}(\Theta))\} \le \delta\,\|\mathbb{\varepsilon}^{-1/2}\boldsymbol{J}(\Theta)\|^2 + \frac{1}{\delta}a_H(\boldsymbol{H}(\Theta),\boldsymbol{H}(\Theta)),$$

for $\delta > 0$. Taking, for instance, $\delta = 2$, we notice that the term $\frac{1}{2}a_H(\boldsymbol{H}(\Theta),\boldsymbol{H}(\Theta))$ will be absorbed by the left-hand side of (7.26).
Finally, using the triangle inequality, Proposition 2.3.6 and the Cauchy-Schwarz inequality in time, we obtain:

$$\begin{aligned}\|\mathbb{e}^{-1/2}\boldsymbol{J}(\Theta)\| &= \left\|\int_0^\Theta \mathbb{e}^{-1/2}\boldsymbol{J}'(t)\,dt + \mathbb{e}^{-1/2}\boldsymbol{J}(0)\right\| \\ &\le \int_0^\Theta \|\mathbb{e}^{-1/2}\boldsymbol{J}'(t)\|\,dt + \|\mathbb{e}^{-1/2}\boldsymbol{J}(0)\| \\ &\le \Theta^{1/2}\left(\int_0^\Theta \|\mathbb{e}^{-1/2}\boldsymbol{J}'(t)\|^2 dt\right)^{1/2} + \|\mathbb{e}^{-1/2}\boldsymbol{J}(0)\|.\end{aligned}$$

Hence, $2\,\|\mathbb{e}^{-1/2}\boldsymbol{J}'(\Theta)\|^2 \le 4\Theta\int_0^\Theta \|\mathbb{e}^{-1/2}\boldsymbol{J}'(t)\|^2 dt + 4\|\mathbb{e}^{-1/2}\boldsymbol{J}(0)\|^2$.
Putting everything back in (7.26), we find that

$$\begin{aligned}&{}_2\|\boldsymbol{H}'(\Theta)\|^2_{\mathcal{H}_H} + \min(1, \frac{1}{2\varepsilon_+})\|\boldsymbol{H}(\Theta)\|^2_{\mathcal{V}_H} \\ &\quad\le {}_2\|\boldsymbol{H}'(\Theta)\|^2_{\mathcal{H}_H} + \frac{1}{2}a_H(\boldsymbol{H}(\Theta),\boldsymbol{H}(\Theta)) + \|\boldsymbol{H}(\Theta)\|^2 \\ &\quad\le C'_{ic} + (1+4T)\int_0^\Theta \|\mathbb{e}^{-1/2}\boldsymbol{J}'(t)\|^2 dt \\ &\qquad + \int_0^\Theta \left(\|\boldsymbol{H}'(t)\|^2 + (1+\frac{1}{\varepsilon_-})\|\boldsymbol{H}(t)\|^2_{\mathcal{V}_H}\right) dt.\end{aligned}$$

where $C'_{ic} = C_{ic} - 2\Re\{(\mathbb{e}^{-1}\boldsymbol{J}(0)|\,\mathbf{curl}\,\boldsymbol{H}_0)\} + 4\|\mathbb{e}^{-1/2}\boldsymbol{J}(0)\|^2$.
We can conclude by using Gronwall's Lemma. ■

Remark 7.2.3 *In the above proof, we integrate in time to compensate for the lack of regularity in space of* $\boldsymbol{J}$ *(and* $\boldsymbol{H}$*). This will also be the case in Theorem 7.3.4, which addresses the existence of electromagnetic fields, assuming only the knowledge of a solution to the second-order problem on the magnetic field.*

Theorem 7.2.4 *Consider a perfect medium in a domain* $\Omega \subset \mathbb{R}^3$ *encased in a perfect conductor, and* $T > 0$*. Let the tensor fields* $\mathbb{e}$ *and* $\mathbb{\mu}$ *satisfy* (5.10).

1. *Assume that*

$$\begin{cases}\boldsymbol{E}_0 \in \boldsymbol{H}_0(\mathbf{curl},\Omega),\ \boldsymbol{H}_0 \in \boldsymbol{H}(\mathbf{curl},\Omega) \\ \boldsymbol{J} \in H^1(0,T;\boldsymbol{L}^2(\Omega))\,;\end{cases} \tag{7.27}$$

then, there exists one, and only one, couple of fields $(\boldsymbol{E},\boldsymbol{H})$*:*

$$\begin{cases}(\boldsymbol{E},\boldsymbol{E}') \in C^0([0,T];\boldsymbol{H}_0(\mathbf{curl},\Omega)) \times C^0([0,T];\boldsymbol{L}^2(\Omega)) \\ (\boldsymbol{H},\boldsymbol{H}') \in C^0([0,T];\boldsymbol{H}(\mathbf{curl},\Omega)) \times C^0([0,T];\boldsymbol{L}^2(\Omega)),\end{cases}$$

which solves Eqs. (7.6-7.7), (7.5) and (7.8-7.9), supplemented with the boundary condition (5.9).

2. *Assume, in addition to 1, that*

$$\begin{cases} \operatorname{div} \mathbb{e}\boldsymbol{E}_0 = \varrho(0),\ \operatorname{div} \mathbb{\mu}\boldsymbol{H}_0 = 0,\ \mathbb{\mu}\boldsymbol{H}_0 \cdot \boldsymbol{n}_{|\Gamma} = 0 \\ \varrho(0) \in H^{-1}(\Omega),\ \dfrac{\partial \varrho}{\partial t} + \operatorname{div} \boldsymbol{J} = 0, \quad t \geq 0\,; \end{cases} \tag{7.28}$$

then, there exists one, and only one, couple of fields $(\boldsymbol{E}, \boldsymbol{H})$*:*

$$\begin{cases} (\boldsymbol{E}, \boldsymbol{E}') \in C^0([0,T]; \boldsymbol{H}_0(\mathbf{curl}, \Omega)) \times C^0([0,T]; \boldsymbol{L}^2(\Omega)) \\ (\boldsymbol{H}, \boldsymbol{H}') \in C^0([0,T]; \boldsymbol{H}(\mathbf{curl}, \Omega) \cap \boldsymbol{H}_0(\operatorname{div} \mathbb{\mu}, \Omega)) \\ \qquad\qquad\qquad\qquad \times C^0([0,T]; \boldsymbol{H}_0(\operatorname{div} \mathbb{\mu}, \Omega)), \end{cases} \tag{7.29}$$

which solves the second-order system of equations (7.6-7.7) and the divergence conditions (7.3-7.4), (7.5) and (7.8-7.9), supplemented with boundary conditions (5.8) *and* (5.9)*.*

3. *Assume, in addition to 1, that*

$$\begin{cases} \mathbb{\mu}^{-1}\, \mathbf{curl}\, \boldsymbol{E}_0 \in \boldsymbol{H}(\mathbf{curl}, \Omega) \\ \mathbb{e}^{-1}(\mathbf{curl}\, \boldsymbol{H}_0 - \boldsymbol{J}(0)) \in \boldsymbol{H}_0(\mathbf{curl}, \Omega) \\ \boldsymbol{J} \in H^2(0,T; \boldsymbol{L}^2(\Omega))\,; \end{cases} \tag{7.30}$$

then, the couple of fields $(\boldsymbol{E}, \boldsymbol{H})$ *of 1 fulfills the boundary condition (7.10).*

In all instances, the couple of fields $(\boldsymbol{E}, \boldsymbol{H})$ *depends continuously on the data.*

Proof.

1. For the problem in the field $\boldsymbol{E}$, we remark, on the one hand, that the variational formulation fits into the abstract framework of the introductory part of §7.2. On the other hand, $\boldsymbol{E}_1$ belongs to $\boldsymbol{L}^2(\Omega)$, the form $a_E(\cdot,\cdot)$ is obviously Hermitian, and moreover, it fulfills property (4.15) in $\boldsymbol{H}_0(\mathbf{curl}, \Omega)$, so the result is a straightforward application of Lions-Magenes Theorem 4.3.13 and its Corollary 4.3.15. One obtains that the second-order equation (7.6) is fulfilled in $L^2(0,T; (\boldsymbol{H}_0(\mathbf{curl}, \Omega))')$, as a side-product (see Remark 4.3.14), whereas the boundary condition (5.9) is included in the definition of $\boldsymbol{H}_0(\mathbf{curl}, \Omega)$.

   For the problem in the field $\boldsymbol{H}$, we have that $\boldsymbol{H}_1 \in \boldsymbol{L}^2(\Omega)$, and moreover, the form a_H is Hermitian, and fulfills property (4.15) in $\boldsymbol{H}(\mathbf{curl}, \Omega)$. However, the conditions on the right-hand side of the variational formulation are not met. In this case, one has to build an energy inequality directly, cf. Lemma 7.2.2. This last result allows one to derive a variant of the Lions-Magenes Theorem, and we also achieve well-posedness in this case, with continuous dependence on the data. Finally, the second-order equation (7.7) obviously holds in $\boldsymbol{D}'(]0,T[\times\Omega)$.
2. For the problem in $\boldsymbol{H}$, our aim is to prove that

$$\forall t \in [0,T],\ \operatorname{div} \mathbb{\mu}\boldsymbol{H}(t) = 0,\ \mathbb{\mu}\boldsymbol{H}(t) \cdot \boldsymbol{n}_{|\Gamma} = 0. \tag{7.31}$$

From step 1, we already have that $\boldsymbol{H} \in C^0([0,T];\boldsymbol{L}^2(\Omega))$, so $\boldsymbol{H}(t)$ belongs to $\boldsymbol{L}^2(\Omega)$ for all $t \in [0,T]$, and we just need to prove that (cf. (2.25))

$$\forall t \in [0,T],\ \forall \phi \in H^1(\Omega),\ (\mu \boldsymbol{H}(t) | \,\mathbf{grad}\, \phi) = 0.$$

So, given $\phi \in H^1(\Omega)$, we define $h_\phi := (\mu \boldsymbol{H} | \,\mathbf{grad}\, \phi) \in C^0([0,T])$. Now, according to Proposition 2.2.10, we have $\mathbf{grad}\, \phi \in \boldsymbol{H}(\mathbf{curl}, \Omega)$, so it can be used in the variational formulation, which yields:

$$\forall \varphi \in \mathcal{D}(]0,T[),\ 0 = \int_0^T h_\phi(t)\varphi''(t)\,dt = \langle h''_\phi, \varphi\rangle_t.$$

In other words, $h''_\phi = 0$ in $\mathcal{D}'(]0,T[)$, so there exist complex numbers a, b such that, for $t \in [0,T]$, $h_\phi(t) = at + b$.
On the other hand, the initial condition on $\boldsymbol{H}_0$ (7.28) gives $h_\phi(0) = 0$. In addition, one also has $h'_\phi(0) = 0$, because (7.9) and Proposition 2.2.10 imply $\operatorname{div} \mu \boldsymbol{H}_1 = 0$ and $\mu \boldsymbol{H}_1 \cdot \boldsymbol{n}_{|\Gamma} = 0$. We conclude that $h_\phi = 0$, which proves (7.31). Obviously, the same result holds for $\boldsymbol{H}'$, so we have obtained

$$\boldsymbol{H}, \boldsymbol{H}' \in C^0([0,T]; \boldsymbol{H}_0(\operatorname{div} \mu, \Omega)).$$

For the problem in $\boldsymbol{E}$, given $\phi \in \mathcal{D}(\Omega)$, this time, we have $\mathbf{grad}\, \phi \in \boldsymbol{H}_0(\mathbf{curl}, \Omega)$ (cf. Proposition 2.2.10), and in this case,

$$\forall \varphi \in \mathcal{D}(]0,T[),\ \int_0^T (\varepsilon \boldsymbol{E}(t) | \,\mathbf{grad}\, \phi)\varphi''(t)\,dt = \int_0^T (\boldsymbol{J}(t) | \,\mathbf{grad}\, \phi)\varphi'(t)\,dt.$$

The right-hand side is then processed:

$$\begin{aligned}
\int_0^T (\boldsymbol{J}(t) | \,\mathbf{grad}\, \phi)\varphi'(t)\,dt &= -\int_0^T \langle \operatorname{div} \boldsymbol{J}(t), \overline{\phi}\rangle \varphi'(t)\,dt \\
&\overset{(7.28)}{=} \int_0^T \langle \varrho'(t), \overline{\phi}\rangle \varphi'(t)\,dt \\
&= -\int_0^T \langle \varrho(t), \overline{\phi}\rangle \varphi''(t)\,dt.
\end{aligned}$$

Next, we introduce $e_\phi := (\varepsilon \boldsymbol{E} | \,\mathbf{grad}\, \phi)$, $r_\phi := \langle \varrho, \overline{\phi}\rangle$, both of which belong to $C^0([0,T])$. Indeed, the latter is characterized by $\langle \varrho', \overline{\phi}\rangle$, which belongs to $C^0([0,T])$ and by $\langle \varrho(0), \overline{\phi}\rangle$. Summing up:

$$\forall \varphi \in \mathcal{D}(]0,T[),\ \langle e''_\phi, \varphi\rangle_t = -\langle r''_\phi, \varphi\rangle_t,$$

so one can write, for $t \in [0,T]$, $e_\phi(t) = r_\phi(t) + at + b$, with a, b being two complex numbers. Then, we recall, from (7.28), that $e_\phi(0) = r_\phi(0)$, and moreover,

$$e'_\phi(0) = (\varepsilon \boldsymbol{E}_1 | \,\mathbf{grad}\, \phi) = -\langle \operatorname{div} \varepsilon \boldsymbol{E}_1, \overline{\phi}\rangle \overset{(7.8)}{=} \langle \operatorname{div} \boldsymbol{J}(0), \overline{\phi}\rangle \overset{(7.28)}{=} r'_\phi(0).$$

Hence, $e_\phi = r_\phi$, which we can express equivalently as

$$\forall t \in [0,T],\ \forall \phi \in \mathcal{D}(\Omega),\ \langle \operatorname{div} \mathbb{e}\boldsymbol{E}(t), \overline{\phi}\rangle = \langle \varrho(t), \overline{\phi}\rangle,\ \text{that is,}$$
$$\forall t \in [0,T],\ \operatorname{div} \mathbb{e}\boldsymbol{E}(t) = \varrho(t) \text{ in } H^{-1}(\Omega).$$

3. Due to 1. and (7.27), we know that $\mathbb{e}^{-1}(\mathbf{curl}\,\boldsymbol{H} - \boldsymbol{J}) \in C^0([0,T];\boldsymbol{L}^2(\Omega))$. On the one hand, for $t \geq 0$, the mapping $\boldsymbol{v} \mapsto (\mathbb{e}^{-1}(\mathbf{curl}\,\boldsymbol{H}(t) - \boldsymbol{J}(t))|\,\mathbf{curl}\,\boldsymbol{v})$ belongs to $(\boldsymbol{H}(\mathbf{curl},\Omega))'$, and we can write

$$\forall \boldsymbol{v} \in \boldsymbol{H}(\mathbf{curl},\Omega),\ t \geq 0,\ (\mathbb{e}^{-1}(\mathbf{curl}\,\boldsymbol{H}(t) - \boldsymbol{J}(t))|\,\mathbf{curl}\,\boldsymbol{v}) = \langle \boldsymbol{X}(t), \boldsymbol{v}\rangle_{\boldsymbol{H}(\mathbf{curl},\Omega)}$$

with $\boldsymbol{X} \in C^0([0,T];(\boldsymbol{H}(\mathbf{curl},\Omega))')$. On the other hand, notice that (7.17) can now be rewritten $\mathbb{p}\boldsymbol{H}'' + \boldsymbol{X} = 0$ in $C^0(]0,T[;(\boldsymbol{H}(\mathbf{curl},\Omega))')$, hence we infer that $\mathbb{p}\boldsymbol{H}'' \in C^0(]0,T[;(\boldsymbol{H}(\mathbf{curl},\Omega))')$.
So, we remark that, if $\boldsymbol{H}'' \in C^0(]0,T[;\boldsymbol{L}^2(\Omega))$, then $\boldsymbol{X}$ belongs to the same function space. In this case,

$$\forall \boldsymbol{v} \in \boldsymbol{H}(\mathbf{curl},\Omega),\ t \in]0,T[,\ (\mathbb{e}^{-1}(\mathbf{curl}\,\boldsymbol{H}(t) - \boldsymbol{J}(t))|\,\mathbf{curl}\,\boldsymbol{v}) = (\boldsymbol{X}(t)|\boldsymbol{v}).$$

Taking $\boldsymbol{v} \in \boldsymbol{D}(\Omega)$, we obtain that $\mathbf{curl}\,\mathbb{e}^{-1}(\mathbf{curl}\,\boldsymbol{H}(t) - \boldsymbol{J}(t)) = \boldsymbol{X}(t) \in \boldsymbol{L}^2(\Omega)$ for $t \in]0,T[$. We conclude, by identification, that

$$\forall \boldsymbol{v} \in \boldsymbol{H}(\mathbf{curl},\Omega),\ t \in]0,T[,\ -(\mathbf{curl}(\mathbb{e}^{-1}(\mathbf{curl}\,\boldsymbol{H} - \boldsymbol{J})(t))|\boldsymbol{v}) + (\mathbb{e}^{-1}(\mathbf{curl}\,\boldsymbol{H} - \boldsymbol{J})(t)|\,\mathbf{curl}\,\boldsymbol{v}) = 0,$$

i.e., (7.11), which yields (7.10).
Now, let us prove that $\boldsymbol{H}'' \in C^0(]0,T[;\boldsymbol{L}^2(\Omega))$ under the assumptions (7.30). For that, we introduce the auxiliary problem

$$\begin{cases} \textit{Find } \mathtt{h} \textit{ such that} \\ \forall \mathtt{v} \in \boldsymbol{H}(\mathbf{curl},\Omega),\ \dfrac{d^2}{dt^2}\{(\mathbb{p}\mathtt{h}(t)|\mathtt{v})\} + a_H(\mathtt{h}(t),\mathtt{v}) \\ \qquad\qquad = (\mathbb{e}^{-1}\boldsymbol{J}'(t)|\,\mathbf{curl}\,\mathtt{v}) \text{ in } \mathcal{D}'(]0,T[), \\ \mathtt{h}(0) = \boldsymbol{H}_1 \text{ and } \mathtt{h}'(0) = \boldsymbol{H}_2 := -\mathbb{p}^{-1}\,\mathbf{curl}(\mathbb{e}^{-1}(\mathbf{curl}\,\boldsymbol{H}_0 - \boldsymbol{J}(0))). \end{cases}$$

Proceeding exactly as in step 1, we find that there exists one, and only one, field $\mathtt{h}$ that solves the above, with regularity

$$(\mathtt{h},\mathtt{h}') \in C^0([0,T];\boldsymbol{H}(\mathbf{curl},\Omega)) \times C^0([0,T];\boldsymbol{L}^2(\Omega)).$$

Then, we check that $t \mapsto \widetilde{\boldsymbol{H}}(t) = \int_0^t \mathtt{h}(s)\,ds + \boldsymbol{H}_0$ solves the original second-order "magnetic" problem. The initial conditions on $\widetilde{\boldsymbol{H}}$ are, respectively, $\widetilde{\boldsymbol{H}}(0) = \boldsymbol{H}_0$ and $\widetilde{\boldsymbol{H}}'(0) = \mathtt{h}(0) = \boldsymbol{H}_1$ (see Proposition 2.3.6 for the latter). Also, replacing $\boldsymbol{H}$ with $\widetilde{\boldsymbol{H}}$ in (7.16), one finds easily, by integration by parts in time, that this new formulation is true for all $\varphi = \psi'$ with $\psi \in \mathcal{D}(]0,T[)$ (and for all $\boldsymbol{w} \in \boldsymbol{H}(\mathbf{curl},\Omega)$). Hence, given $\boldsymbol{w} \in \boldsymbol{H}(\mathbf{curl},\Omega)$, we find that it holds that, in $\mathcal{D}'(]0,T[)$,

$$\frac{d^2}{dt^2}\left\{(\mathbb{\mu}\widetilde{\boldsymbol{H}}(t)|\boldsymbol{w})\right\} + (\mathbb{\varepsilon}^{-1}\,\mathbf{curl}\,\widetilde{\boldsymbol{H}}(t)|\,\mathbf{curl}\,\boldsymbol{w}) - (\mathbb{\varepsilon}^{-1}\boldsymbol{J}(t)|\,\mathbf{curl}\,\boldsymbol{w}) = a_{\boldsymbol{w}},$$

where $a_{\boldsymbol{w}}$ is a constant number. Going to the limit at $t = 0^+$, we obtain

$$\begin{aligned} a_{\boldsymbol{w}} &= (\mathbb{\mu}\mathtt{h}'(0)|\boldsymbol{w}) + (\mathbb{\varepsilon}^{-1}\,\mathbf{curl}\,\widetilde{\boldsymbol{H}}(0)|\,\mathbf{curl}\,\boldsymbol{w}) - (\mathbb{\varepsilon}^{-1}\boldsymbol{J}(0)|\,\mathbf{curl}\,\boldsymbol{w}) \\ &= -(\mathbf{curl}(\mathbb{\varepsilon}^{-1}(\mathbf{curl}\,\boldsymbol{H}_0 - \boldsymbol{J}(0)))|\boldsymbol{w}) + (\mathbb{\varepsilon}^{-1}(\mathbf{curl}\,\boldsymbol{H}_0 - \boldsymbol{J}(0))|\,\mathbf{curl}\,\boldsymbol{w}) \\ &= 0 \text{ by integration by parts, thanks to (7.30).} \end{aligned}$$

So, we conclude that $\widetilde{\boldsymbol{H}}$ solves (7.17). By the uniqueness of the solution, we actually have that $\boldsymbol{H}$ and $\widetilde{\boldsymbol{H}}$ coincide, and in particular, $\boldsymbol{H}'' = \mathtt{h}'$ belongs to the *ad hoc* function space.

■

Remark 7.2.5 *In the previous proof (step 2), one cannot use, as before, the process described in Remark 5.1.2 for the first-order equations to recover the divergence conditions* (5.5)–(5.6)*.*

Remark 7.2.6 *The second-order in time problems are related only through their initial conditions. So, in principle, it is possible to solve them "independently": one can choose to state the well-posedness results for the second-order system of equations in* $\boldsymbol{E}$ *only, and likewise for* $\boldsymbol{H}$*. However, the assumptions about the data are stronger for recovering the boundary condition* (7.10) *on the field* $\boldsymbol{H}$*, which induces some asymmetry between the two second-order problems.*

Remark 7.2.7 *To tackle the unusual right-hand side in the "magnetic" case, one could also consider applying the improved regularity results of §4.4, to reach similar conclusions regarding the existence and uniqueness of* $\boldsymbol{H}$*. Indeed, it is clear that* $\boldsymbol{w} \to (\mathbb{\varepsilon}^{-1}\boldsymbol{J}|\,\mathbf{curl}\,\boldsymbol{w})$ *belongs to* $L^2(0,T;\boldsymbol{H}(\mathbf{curl},\Omega)')$ *if* $\boldsymbol{J} \in L^2(0,T;\boldsymbol{L}^2(\Omega))$*. Those results hold under some compactness property: namely, that the space of magnetic fields is compactly imbedded in* $\mathcal{H}_H = \boldsymbol{L}^2(\Omega)$*. However,* $\boldsymbol{H}(\mathbf{curl},\Omega)$ *is not a compact subset of* $\boldsymbol{L}^2(\Omega)$*, so one must instead consider an appropriate subspace that still contains all the magnetic fields. On the other hand (cf. step 2),* $\operatorname{div}\mathbb{\mu}\boldsymbol{H}$ *and* $\mathbb{\mu}\boldsymbol{H}\cdot\boldsymbol{n}_{|\Gamma}$ *both vanish. An appropriate choice is then* $\boldsymbol{H}(\mathbf{curl},\Omega)\cap\boldsymbol{H}_0(\operatorname{div}\mathbb{\mu},\Omega)$*, which is compactly imbedded in* $\boldsymbol{L}^2(\Omega)$ when Ω is a domain*, according to Theorem 7.5.3 below.*

7.2.2 Truncated interior problem

Below, we focus on the differences with the case of a domain encased in a perfect conductor: unless otherwise specified, notations are the same as in this case.

Let us start with the problem in $\boldsymbol{H}$, cf. (7.21) or (7.22) and Remark 7.1.2. We choose the same pivot space $\mathcal{H}_H = \boldsymbol{L}^2(\Omega)$ and scalar products $(\cdot,\cdot)_{\mathcal{H}_H}$,

$_2(\cdot,\cdot)_{\mathcal{H}_H}$. Whereas, we set $\mathcal{V}_H^{TIP} := \{\boldsymbol{v} \in \boldsymbol{H}(\mathbf{curl},\Omega) \ : \ \boldsymbol{v}\times\boldsymbol{n}_{|\Gamma_A} \in \boldsymbol{L}^2_t(\Gamma_A)\}$, and define

$$a_H^{TIP}(\boldsymbol{v},\boldsymbol{w}) = a_H(\boldsymbol{v},\boldsymbol{w}) + \sqrt{\frac{\mu}{\varepsilon}}\int_{\Gamma_A} \boldsymbol{v}_\top \cdot \overline{\boldsymbol{w}_\top}\, d\Gamma.$$

Here, TIP stands for truncated interior problem.

Lemma 7.2.8 *The field $\boldsymbol{H}$ fulfills the energy inequality, for some $C_T > 0$,*

$$\|\boldsymbol{H}\|^2_{W^{1,\infty}(0,T;\boldsymbol{L}^2(\Omega))} + \|\boldsymbol{H}\|^2_{L^\infty(0,T;\boldsymbol{H}(\mathbf{curl},\Omega))} + \int_0^T\int_{\Gamma_A} |\boldsymbol{H}'_\top(t)|^2\, d\Gamma\, dt$$
$$\leq C_T\left\{C'_{ic} + \int_0^T \|\boldsymbol{J}'(t)\|^2\, dt + \int_0^T\int_{\Gamma_A} |(\boldsymbol{k}^\star)'(t)\times\boldsymbol{n}|^2\, d\Gamma\, dt\right\}. \quad (7.32)$$

Proof. For $\Theta \in]0,T[$,

$$_2\|\boldsymbol{H}'(\Theta)\|^2_{\mathcal{H}_H} + a_H(\boldsymbol{H}(\Theta),\boldsymbol{H}(\Theta)) + \|\boldsymbol{H}(\Theta)\|^2$$
$$+2\sqrt{\frac{\mu}{\varepsilon}}\int_0^\Theta\int_{\Gamma_A} |\boldsymbol{H}'_\top(t)|^2\, d\Gamma\, dt = C_{ic} + 2\int_0^\Theta \Re\{(\mathfrak{c}^{-1}\boldsymbol{J}(t)|\,\mathbf{curl}\,\boldsymbol{H}'(t))\}\, dt$$
$$+2\int_0^\Theta \Re\{(\boldsymbol{H}(t)|\boldsymbol{H}'(t))\}\, dt - 2\sqrt{\frac{\mu}{\varepsilon}}\int_0^\Theta\int_{\Gamma_A} \Re\{(\boldsymbol{k}^\star)'(t)\times\boldsymbol{n}\cdot\overline{\boldsymbol{H}'_\top(t)}\}\, d\Gamma\, dt.$$

One then bounds the new term on the right-hand side, for instance, by

$$\sqrt{\frac{\mu}{\varepsilon}}\int_0^\Theta\int_{\Gamma_A} \left(|(\boldsymbol{k}^\star)'(t)\times\boldsymbol{n}|^2 + |\boldsymbol{H}'_\top(t)|^2\right)\, d\Gamma\, dt\,,$$

whose rightmost part can be absorbed into the left-hand side:

$$_2\|\boldsymbol{H}'(\Theta)\|^2_{\mathcal{H}_H} + a_H(\boldsymbol{H}(\Theta),\boldsymbol{H}(\Theta)) + \|\boldsymbol{H}(\Theta)\|^2$$
$$+\sqrt{\frac{\mu}{\varepsilon}}\int_0^\Theta\int_{\Gamma_A} |\boldsymbol{H}'_\top(t)|^2\, d\Gamma\, dt \leq C_{ic} + 2\int_0^\Theta \Re\{(\mathfrak{c}^{-1}\boldsymbol{J}(t)|\,\mathbf{curl}\,\boldsymbol{H}'(t))\}\, dt$$
$$+2\int_0^\Theta \Re\{(\boldsymbol{H}(t)|\boldsymbol{H}'(t))\}\, dt + \sqrt{\frac{\mu}{\varepsilon}}\int_0^\Theta\int_{\Gamma_A} |(\boldsymbol{k}^\star)'(t)\times\boldsymbol{n}|^2\, d\Gamma\, dt.$$

In particular, one has

$$_2\|\boldsymbol{H}'(\Theta)\|^2_{\mathcal{H}_H} + a_H(\boldsymbol{H}(\Theta),\boldsymbol{H}(\Theta)) + \|\boldsymbol{H}(\Theta)\|^2 \leq C_{ic}$$
$$+2\int_0^\Theta \Re\{(\mathfrak{c}^{-1}\boldsymbol{J}(t)|\,\mathbf{curl}\,\boldsymbol{H}'(t))\}\, dt$$
$$+2\int_0^\Theta \Re\{(\boldsymbol{H}(t)|\boldsymbol{H}'(t))\}\, dt + \sqrt{\frac{\mu}{\varepsilon}}\int_0^\Theta\int_{\Gamma_A} |(\boldsymbol{k}^\star)'(t)\times\boldsymbol{n}|^2\, d\Gamma\, dt.$$

Proceeding as in the proof of Lemma 7.2.2 (integrating by parts in time the term with $\boldsymbol{J}$), one finds that $\|\boldsymbol{H}\|^2_{W^{1,\infty}(0,T;\boldsymbol{L}^2(\Omega))} + \|\boldsymbol{H}\|^2_{L^\infty(0,T;\boldsymbol{H}(\mathbf{curl},\Omega))}$ is

bounded as claimed in (7.32), for an *ad hoc* $C_T > 0$.
On the other hand, one also has

$$\sqrt{\frac{\mu}{\varepsilon}} \int_0^{\Theta} \int_{\Gamma_A} |\boldsymbol{H}'_{\top}(t)|^2 \, d\Gamma \, dt \leq C_{ic} + 2 \int_0^{\Theta} \Re\{(\mathfrak{e}^{-1} \boldsymbol{J}(t) | \, \mathbf{curl} \, \boldsymbol{H}'(t))\} \, dt$$
$$+2 \int_0^{\Theta} \Re\{(\boldsymbol{H}(t) | \boldsymbol{H}'(t))\} \, dt + \sqrt{\frac{\mu}{\varepsilon}} \int_0^{\Theta} \int_{\Gamma_A} |(\boldsymbol{k}^\star)'(t) \times \boldsymbol{n}|^2 \, d\Gamma \, dt.$$

Again, integrating by parts in time the term with $\boldsymbol{J}$, and using the proven bound on $\|\boldsymbol{H}\|^2_{W^{1,\infty}(0,T;\boldsymbol{L}^2(\Omega))} + \|\boldsymbol{H}\|^2_{L^\infty(0,T;\boldsymbol{H}(\mathbf{curl},\Omega))}$, one concludes that (7.32) globally holds for some $C_T > 0$. ■

For the problem in $\boldsymbol{E}$, cf. (7.23) or (7.24) and Remark 7.1.2, we choose the same pivot space $\mathcal{H}_E = \boldsymbol{L}^2(\Omega)$ and scalar products $(\cdot,\cdot)_{\mathcal{H}_E}$, ${}_2(\cdot,\cdot)_{\mathcal{H}_E}$. On the other hand, we set $\mathcal{V}_E^{TIP} := \{\boldsymbol{v} \in \boldsymbol{H}_{0,\Gamma_P}(\mathbf{curl},\Omega) \ : \ \boldsymbol{v} \times \boldsymbol{n}_{|\Gamma_A} \in \boldsymbol{L}^2_t(\Gamma_A)\}$, and define

$$a_E^{TIP}(\boldsymbol{v},\boldsymbol{w}) = a_E(\boldsymbol{v},\boldsymbol{w}) + \sqrt{\frac{\varepsilon}{\mu}} \int_{\Gamma_A} \boldsymbol{v} \times \boldsymbol{n} \cdot \overline{\boldsymbol{w} \times \boldsymbol{n}} \, d\Gamma.$$

As previously, we find an energy inequality, whose proof is omitted.

Lemma 7.2.9 *The field $\boldsymbol{E}$ fulfills the energy inequality, for some $C_T > 0$,*

$$\|\boldsymbol{E}\|^2_{W^{1,\infty}(0,T;\boldsymbol{L}^2(\Omega))} + \|\boldsymbol{E}\|^2_{L^\infty(0,T;\boldsymbol{H}(\mathbf{curl},\Omega))} + \int_0^T \int_{\Gamma_A} |\boldsymbol{E}'(t) \times \boldsymbol{n}|^2 \, d\Gamma \, dt$$
$$\leq C_T \left\{ C''_{ic} + \int_0^T \|\boldsymbol{J}'(t)\|^2 \, dt + \int_0^T \int_{\Gamma_A} |(\boldsymbol{g}^\star)'(t)|^2 \, d\Gamma \, dt \right\}.$$

Above, $C''_{ic} := C''_{ic}(\|\, \mathbf{curl} \, \boldsymbol{E}_0\|, \|\boldsymbol{E}_1\|)$.

We now proceed with the main existence result for the truncated interior problem.

Theorem 7.2.10 *Consider the truncated interior problem for a perfect medium, set in a computational domain $\Omega \subset \mathbb{R}^3$. Near the artificial boundary, the medium is homogeneous. Set $T > 0$, and let the tensor fields $\mathfrak{e}$ and $\mathfrak{p}$ satisfy* (5.10).

1. *Assume that*

$$\begin{cases} \boldsymbol{E}_0 \in \boldsymbol{H}_{0,\Gamma_P}(\mathbf{curl},\Omega), \ \boldsymbol{H}_0 \in \boldsymbol{H}(\mathbf{curl},\Omega) \\ \boldsymbol{J} \in H^1(0,T;\boldsymbol{L}^2(\Omega)) \\ \boldsymbol{g}^\star \in H^1(0,T;\boldsymbol{L}^2_t(\Gamma_A)) \, ; \end{cases} \tag{7.33}$$

then, there exists one, and only one, couple of fields $(\boldsymbol{E},\boldsymbol{H})$:

$$\begin{cases} (\boldsymbol{E},\boldsymbol{E}') \in C^0([0,T];\boldsymbol{H}_{0,\Gamma_P}(\mathbf{curl},\Omega)) \times C^0([0,T];\boldsymbol{L}^2(\Omega)) \\ (\boldsymbol{H},\boldsymbol{H}') \in C^0([0,T];\boldsymbol{H}(\mathbf{curl},\Omega)) \times C^0([0,T];\boldsymbol{L}^2(\Omega)), \end{cases}$$

which solves Eqs. (7.6)–(7.7), (7.5) *and* (7.8)–(7.9), *supplemented with the boundary condition* (5.9) *on* Γ_P. *Moreover, the traces* $(\boldsymbol{H}_\top)_{|\Gamma_A}$, $(\boldsymbol{H}'_\top)_{|\Gamma_A}$, $(\boldsymbol{E}\times\boldsymbol{n})_{|\Gamma_A}$ *and* $(\boldsymbol{E}'\times\boldsymbol{n})_{|\Gamma_A}$ *all belong to* $L^2(0,T;\boldsymbol{L}^2_t(\Gamma_A))$.

2. *Assume, in addition to 1, that*

$$\begin{cases} \operatorname{div}\mathbb{e}\boldsymbol{E}_0 = \varrho(0),\ \operatorname{div}\mathbb{u}\boldsymbol{H}_0 = 0,\ \mathbb{u}\boldsymbol{H}_0\cdot\boldsymbol{n}_{|\Gamma_P} = 0 \\ \varrho(0)\in H^{-1}(\Omega),\ \dfrac{\partial\varrho}{\partial t} + \operatorname{div}\boldsymbol{J} = 0, \quad t\geq 0\,; \end{cases} \tag{7.34}$$

then, there exists one, and only one, couple of fields $(\boldsymbol{E},\boldsymbol{H})$:

$$\begin{cases} (\boldsymbol{E},\boldsymbol{E}')\in C^0([0,T];\boldsymbol{H}_{0,\Gamma_P}(\mathbf{curl},\Omega))\times C^0([0,T];\boldsymbol{L}^2(\Omega)) \\ (\boldsymbol{H},\boldsymbol{H}')\in C^0([0,T];\boldsymbol{H}(\mathbf{curl},\Omega)\cap\boldsymbol{H}_{0,\Gamma_P}(\operatorname{div}\mathbb{u},\Omega)) \\ \qquad\qquad\qquad\qquad \times C^0([0,T];\boldsymbol{H}_{0,\Gamma_P}(\operatorname{div}\mathbb{u},\Omega)), \end{cases}$$

which solves the second-order system of equations (7.6)–(7.7) *and the divergence conditions* (7.3)–(7.4), (7.5) *and* (7.8)–(7.9), *supplemented with boundary conditions* (5.8) *and* (5.9) *on* Γ_P.

3. *Assume, in addition to 1, that*

$$\begin{cases} \mathbb{u}^{-1}\,\mathbf{curl}\,\boldsymbol{E}_0\in\boldsymbol{H}(\mathbf{curl},\Omega) \\ \mathbb{e}^{-1}(\mathbf{curl}\,\boldsymbol{H}_0-\boldsymbol{J}(0))\in\boldsymbol{H}_{0,\Gamma_P}(\mathbf{curl},\Omega) \\ ((\mathbf{curl}\,\boldsymbol{E}_0)_\top)_{|\Gamma_A},\ ((\mathbf{curl}\,\boldsymbol{H}_0-\boldsymbol{J}(0))\times\boldsymbol{n})_{|\Gamma_A}\in\boldsymbol{L}^2_t(\Gamma_A) \\ \boldsymbol{J}\in H^2(0,T;\boldsymbol{L}^2(\Omega)) \\ \boldsymbol{g}^\star\in H^2(0,T;\boldsymbol{L}^2_t(\Gamma_A)) \\ -\frac{1}{\sqrt{\varepsilon\mu}}(\mathbf{curl}\,\boldsymbol{E}_0)_\top+\frac{1}{\varepsilon}(\mathbf{curl}\,\boldsymbol{H}_0-\boldsymbol{J}(0))\times\boldsymbol{n}=(\boldsymbol{g}^\star)'(0)\ \textit{on}\ \Gamma_A\,, \end{cases} \tag{7.35}$$

then, the couple of fields $(\boldsymbol{E},\boldsymbol{H})$ *of 1 fulfills the boundary conditions* (7.10) *on* Γ_P, *and* (7.13) *or* (7.14) *on* Γ_A.

In all instances, the couple of fields $(\boldsymbol{E},\boldsymbol{H})$ *depends continuously on the data.*

Remark 7.2.11 *By definition, the regularity of* $\boldsymbol{k}^\star$ *matches that of* $\boldsymbol{g}^\star$, *i.e.,* $\boldsymbol{k}^\star\in H^1(0,T;\boldsymbol{L}^2_t(\Gamma_A))$ *at step 1, respectively* $\boldsymbol{k}^\star\in H^2(0,T;\boldsymbol{L}^2_t(\Gamma_A))$ *at step 3.*

Proof.

1. The proof is very similar to that of item 1 of Theorem 7.2.4. Then, the regularity results on the tangential traces of the fields follow from the energy inequalities of Lemmas 7.2.8 and 7.2.9. Finally, Eqs. (7.6-7.7) hold in $\boldsymbol{D}'(]0,T[\times\Omega)$.
2. For the problem in $\boldsymbol{H}$, thanks to (2.25), our aim is to prove that

$$\forall t\in[0,T],\ \forall\phi\in H^1_{0,\Gamma_A}(\Omega),\ (\mathbb{u}\boldsymbol{H}(t)|\,\mathbf{grad}\,\phi)=0.$$

As a matter of fact, given $\phi\in H^1_{0,\Gamma_A}(\Omega)$, there exists $(\phi_k)_k\in(C^\infty_{\Gamma_A}(\overline{\Omega}))^{\mathbb{N}}$ such that $\lim_{k\to\infty}\|\phi-\phi_k\|_{H^1(\Omega)}=0$ (cf. Definition 2.1.65). It follows that $(\mathbf{grad}\,\phi_k)_k$ is a Cauchy sequence in $\mathcal{V}^{TIP}_H$, hence it converges in $\mathcal{V}^{TIP}_H$. By the uniqueness of the limit (in $\boldsymbol{D}'(\Omega)$), one has $\mathbf{grad}\,\phi\in\mathcal{V}^{TIP}_H$. So, one can follow the proof of item 2 of Theorem 7.2.4. For the problem in $\boldsymbol{E}$, the proof is unchanged.

3. Due to 1 and (7.33), we know that $\mathbb{e}^{-1}(\mathbf{curl}\,\boldsymbol{H}-\boldsymbol{J})\in C^0([0,T];\boldsymbol{L}^2(\Omega))$. On the one hand, for $t\geq 0$, the mapping $\boldsymbol{v}\mapsto(\mathbb{e}^{-1}(\mathbf{curl}\,\boldsymbol{H}(t)-\boldsymbol{J}(t))|\,\mathbf{curl}\,\boldsymbol{v})$ belongs to $(\boldsymbol{H}_{0,\Gamma_A}(\mathbf{curl},\Omega))'$ and we can write

$$\forall\boldsymbol{v}\in\boldsymbol{H}_{0,\Gamma_A}(\mathbf{curl},\Omega),\ t\geq 0,$$
$$(\mathbb{e}^{-1}(\mathbf{curl}\,\boldsymbol{H}(t)-\boldsymbol{J}(t))|\,\mathbf{curl}\,\boldsymbol{v})=\langle\boldsymbol{X}(t),\boldsymbol{v}\rangle_{\boldsymbol{H}_{0,\Gamma_A}(\mathbf{curl},\Omega)},$$

with $\boldsymbol{X}\in C^0([0,T];(\boldsymbol{H}_{0,\Gamma_A}(\mathbf{curl},\Omega))')$.
On the other hand, according to Definition 2.2.27, the closure of $\boldsymbol{C}^\infty_{\Gamma_A}(\overline{\Omega})$ in $\boldsymbol{H}(\mathbf{curl},\Omega)$ is equal to $\boldsymbol{H}_{0,\Gamma_A}(\mathbf{curl},\Omega)$. As $\boldsymbol{C}^\infty_{\Gamma_A}(\overline{\Omega})\subset\mathcal{V}^{TIP}_H$, (7.22) implies, in particular, that $\mathbb{\mu}\boldsymbol{H}''+\boldsymbol{X}=0$ in $L^2(0,T;(\boldsymbol{H}_{0,\Gamma_A}(\mathbf{curl},\Omega))')$. If $\boldsymbol{H}''\in C^0(]0,T[;\boldsymbol{L}^2(\Omega))$, then $\boldsymbol{X}$ belongs to the same function space. In which case, it follows that

$$\forall\boldsymbol{v}\in\boldsymbol{H}_{0,\Gamma_A}(\mathbf{curl},\Omega),\ t\in]0,T[,\quad(\mathbb{e}^{-1}(\mathbf{curl}\,\boldsymbol{H}(t)-\boldsymbol{J}(t))|\,\mathbf{curl}\,\boldsymbol{v})=(\boldsymbol{X}(t)|\boldsymbol{v}).$$

Taking $\boldsymbol{v}\in\boldsymbol{D}(\Omega)$, we obtain that $\mathbf{curl}\,\mathbb{e}^{-1}(\mathbf{curl}\,\boldsymbol{H}-\boldsymbol{J})(t)=\boldsymbol{X}(t)\in\boldsymbol{L}^2(\Omega)$ for $t\in]0,T[$. By identification, one obtains

$$\forall\boldsymbol{v}\in\boldsymbol{H}_{0,\Gamma_A}(\mathbf{curl},\Omega),\ t\in]0,T[,\ -(\mathbf{curl}(\mathbb{e}^{-1}(\mathbf{curl}\,\boldsymbol{H}-\boldsymbol{J})(t))|\boldsymbol{v})+$$
$$(\mathbb{e}^{-1}(\mathbf{curl}\,\boldsymbol{H}-\boldsymbol{J})(t)|\,\mathbf{curl}\,\boldsymbol{v})=0,$$

Thanks to (2.27) and (2.24), we conclude that the boundary condition (7.10) is fulfilled on Γ_P. Let us next recover the boundary condition on Γ_A. Still assuming $\boldsymbol{H}''\in C^0(]0,T[;\boldsymbol{L}^2(\Omega))$, we have proven that, for $t\in]0,T[$, $\mathbf{curl}\,\mathbb{e}^{-1}(\mathbf{curl}\,\boldsymbol{H}-\boldsymbol{J})(t)=-\mathbb{\mu}\boldsymbol{H}''(t)\in\boldsymbol{L}^2(\Omega)$. Going back to (7.22), we now use test functions $\boldsymbol{v}$ in $\boldsymbol{C}^\infty_{\Gamma_P}(\overline{\Omega})\subset\mathcal{V}^{TIP}_H$: integrating by parts $(\mathbb{e}^{-1}(\mathbf{curl}\,\boldsymbol{H}-\boldsymbol{J})(t)|\,\mathbf{curl}\,\boldsymbol{v})$, we find

$$\int_{\Gamma_A}\left[\sqrt{\frac{\mu}{\varepsilon}}(\boldsymbol{H}'_\top(t)+(\boldsymbol{k}^\star)'(t)\times\boldsymbol{n})+\frac{1}{\varepsilon}(\mathbf{curl}\,\boldsymbol{H}-\boldsymbol{J})(t)\times\boldsymbol{n}\right]\cdot\overline{\boldsymbol{v}_\top}\,d\Gamma=0.$$

Now, one uses the density of $\boldsymbol{C}^\infty_{\Gamma_P}(\overline{\Omega})$ in $\boldsymbol{H}_{0,\Gamma_P}(\mathbf{curl},\Omega)$ (this is Definition 2.2.27), and hence of the tangential components traces on Γ_A of $\boldsymbol{C}^\infty_{\Gamma_P}(\overline{\Omega})$ in $\boldsymbol{H}^{-1/2}_{\perp,0}(\mathrm{curl}_\Gamma,\Gamma_A)$ (see Theorem 3.1.28). Then, together with the duality identity of Theorem 3.1.29, it yields that (7.14) holds in $\boldsymbol{H}^{-1/2}_{\parallel}(\mathrm{div}_{\Gamma_A},\Gamma_A)$.
It remains to prove that $\boldsymbol{H}''\in C^0(]0,T[;\boldsymbol{L}^2(\Omega))$ under the assumptions (7.35). For that, we introduce the auxiliary problem

$$\begin{cases}\textit{Find } \mathtt{h} \textit{ such that}\\ \forall\mathtt{v}\in\mathcal{V}^{TIP}_H,\ \dfrac{d^2}{dt^2}\{(\mathbb{\mu}\mathtt{h}(t)|\mathtt{v})\}+a^{TIP}_H(\mathtt{h}(t),\mathtt{v})\\ \qquad=(\mathbb{e}^{-1}\boldsymbol{J}'(t)|\,\mathbf{curl}\,\mathtt{v})-\sqrt{\dfrac{\mu}{\varepsilon}}\displaystyle\int_{\Gamma_A}(\boldsymbol{k}^\star)'(t)\times\boldsymbol{n}\cdot\overline{\mathtt{v}_\top}\,d\Gamma \text{ in } \mathcal{D}'(]0,T[),\\ \mathtt{h}(0)=\boldsymbol{H}_1 \text{ and } \mathtt{h}'(0)=\boldsymbol{H}_2:=-\mathbb{\mu}^{-1}\mathbf{curl}(\mathbb{e}^{-1}(\mathbf{curl}\,\boldsymbol{H}_0-\boldsymbol{J}(0))).\end{cases}$$

Proceeding exactly as in step 1, we find that there exists one, and only one, field $\mathtt{h}$ that solves the above, with regularity

$$(\mathtt{h}, \mathtt{h}') \in C^0([0,T]; \boldsymbol{H}(\mathbf{curl}, \Omega)) \times C^0([0,T]; \boldsymbol{L}^2(\Omega)),$$

plus regularity of the tangential traces.
Then, we check that $t \mapsto \widetilde{\boldsymbol{H}}(t) = \int_0^t \mathtt{h}(s)\, ds + \boldsymbol{H}_0$ solves the original second-order "magnetic" problem. The initial conditions on $\widetilde{\boldsymbol{H}}$ are, respectively, $\widetilde{\boldsymbol{H}}(0) = \boldsymbol{H}_0$ and $\widetilde{\boldsymbol{H}}'(0) = \mathtt{h}(0) = \boldsymbol{H}_1$. Also, if one considers for $\widetilde{\boldsymbol{H}}$ the formulation (7.21) (replacing $\boldsymbol{H}$ with $\widetilde{\boldsymbol{H}}$), one easily finds, by integration by parts in time, that this new formulation is true for all $\varphi = \psi'$ with $\psi \in \mathcal{D}(]0,T[)$ (and for all $\boldsymbol{w} \in \mathcal{V}_H^{TIP}$). Hence, given $\boldsymbol{w} \in \mathcal{V}_H^{TIP}$, we find that it holds that, in $\mathcal{D}'(]0,T[)$,

$$\begin{aligned}
&\frac{d^2}{dt^2}\left\{(\mathbb{\mu}\widetilde{\boldsymbol{H}}(t)|\boldsymbol{w})\right\} + (\mathbb{\varepsilon}^{-1}\,\mathbf{curl}\,\widetilde{\boldsymbol{H}}(t)|\,\mathbf{curl}\,\boldsymbol{w}) \\
&\quad -(\mathbb{\varepsilon}^{-1}\boldsymbol{J}(t)|\,\mathbf{curl}\,\boldsymbol{w}) + \sqrt{\frac{\mu}{\varepsilon}}\int_{\Gamma_A} (\widetilde{\boldsymbol{H}}'_\top(t) + (\boldsymbol{k}^\star)'(t)\times\boldsymbol{n})\cdot\overline{\boldsymbol{w}_\top}\, d\Gamma = a_{\boldsymbol{w}},
\end{aligned}$$

where $a_{\boldsymbol{w}}$ is a constant number. According to the assumptions, we have $(\mathtt{h}_\top)_{|\Gamma_A}(0) \in \boldsymbol{L}^2_t(\Gamma_A)$, so we can pass to the limit at $t = 0^+$ and reach

$$\begin{aligned}
a_{\boldsymbol{w}} &= (\mathbb{\mu}\mathtt{h}'(0)|\boldsymbol{w}) + (\mathbb{\varepsilon}^{-1}\,\mathbf{curl}\,\widetilde{\boldsymbol{H}}(0)|\,\mathbf{curl}\,\boldsymbol{w}) - (\mathbb{\varepsilon}^{-1}\boldsymbol{J}(0)|\,\mathbf{curl}\,\boldsymbol{w}) \\
&\qquad + \sqrt{\frac{\mu}{\varepsilon}}\int_{\Gamma_A} (\mathtt{h}_\top(0) + (\boldsymbol{k}^\star)'(0)\times\boldsymbol{n})\cdot\overline{\boldsymbol{w}_\top}\, d\Gamma \\
&= -(\mathbf{curl}(\mathbb{\varepsilon}^{-1}(\mathbf{curl}\,\boldsymbol{H}_0 - \boldsymbol{J}(0)))|\boldsymbol{w}) + (\mathbb{\varepsilon}^{-1}(\mathbf{curl}\,\boldsymbol{H}_0 - \boldsymbol{J}(0))|\,\mathbf{curl}\,\boldsymbol{w}) \\
&\qquad + \sqrt{\frac{\mu}{\varepsilon}}\int_{\Gamma_A} ((\boldsymbol{H}_1)_\top + (\boldsymbol{k}^\star)'(0)\times\boldsymbol{n})\cdot\overline{\boldsymbol{w}_\top}\, d\Gamma \\
&= 0 \text{ by integration by parts, thanks to (7.35).}
\end{aligned}$$

So, we conclude that $\widetilde{\boldsymbol{H}}$ solves (7.22). By the uniqueness of the solution, we actually have that $\boldsymbol{H}$ and $\widetilde{\boldsymbol{H}}$ coincide, and in particular, $\boldsymbol{H}'' = \mathtt{h}'$ belongs to the *ad hoc* function space.
For the problem in $\boldsymbol{E}$, we have to introduce another auxiliary problem in $\mathtt{e}$, which turns out to be equal to $\boldsymbol{E}'$. We omit the details, as the proof is simpler (the boundary condition on Γ_P is already known).

■

7.3 Second-order to first-order equations

The question we address here is: are the fields we have characterized in §7.2 equal to the solution to the first-order equations? This question is alluded

to in §1.5.3, and a formal justification is derived there. Below, we shall consider two different approaches to addressing this issue. The first one uses the knowledge of the *two fields* $\boldsymbol{E}$ *and* $\boldsymbol{H}$, which solve the second-order Maxwell equations (cf. §7.2), whereas the other one uses the knowledge of *only one* of those fields. To avoid repetitions, we shall apply the two-field approach to the truncated interior problem, and the one-field approach in a domain encased in a perfect conductor.

7.3.1 Two-field approach

Let us study the truncated interior problem. We mainly use the regularity results proven in Theorem 7.2.10, and in particular, those needed on the first- and second-order derivatives of $\boldsymbol{H}$ and $\boldsymbol{E}$ (cf. item 3). In this way, the two-field approach can be viewed as a by-product of this Theorem.

Theorem 7.3.1 *Consider the truncated interior problem for a perfect medium, set in a computational domain $\Omega \subset \mathbb{R}^3$. Near the artificial boundary, the medium is homogeneous. Set $T > 0$, and let the tensor fields $\mathbb{c}$ and $\mathbb{\mu}$ satisfy* (5.10)*. Under the assumptions* (7.33)*,* (7.34)*,* (7.35) *and*

$$\boldsymbol{E}_0 \times \boldsymbol{n} + \sqrt{\frac{\mu}{\varepsilon}}(\boldsymbol{H}_0)_\top = \boldsymbol{g}^\star(0) \text{ on } \Gamma_A, \tag{7.36}$$

the solution $(\boldsymbol{E}, \boldsymbol{H})$ *to the second-order Maxwell equations is equal to the solution to the first-order Maxwell equations.*

Proof. Starting from the results of Theorem 7.2.10, there remains to check that the solution $(\boldsymbol{E}, \boldsymbol{H})$ to the second-order Maxwell equations fulfills Eqs. (7.1)–(7.2), together with the boundary condition (7.12) on Γ_A, to prove that it is indeed the same as the solution to the first-order equations. As a matter of fact, the uniqueness of the solution to the first-order Maxwell equations for the truncated interior problem (§5.1.2) allows one to reach the conclusion.

Let us first investigate Eqs. (7.1)–(7.2). To that aim, let us introduce the two auxiliary unknowns

$$\boldsymbol{U} := \boldsymbol{E}' - \mathbb{c}^{-1}\,\mathbf{curl}\,\boldsymbol{H} + \mathbb{c}^{-1}\boldsymbol{J} \text{ and } \boldsymbol{V} := -\boldsymbol{H}' - \mathbb{\mu}^{-1}\,\mathbf{curl}\,\boldsymbol{E}.$$

We already know that $\boldsymbol{U}, \boldsymbol{V} \in C^0([0,T]; \boldsymbol{L}^2(\Omega))$. Also, due to the first-order initial conditions (7.8)-(7.9), we have $\boldsymbol{U}(0) = \boldsymbol{V}(0) = 0$. Next, we recall that we solved auxiliary problems (see item 3 of Theorem 7.2.10), whose solutions are the first-order time derivatives of the fields $\boldsymbol{E}$ and $\boldsymbol{H}$. In particular, we have the following extra-regularities:

$$\begin{cases} (\boldsymbol{E}', \boldsymbol{E}'') \in C^0([0,T]; \boldsymbol{H}_{0,\Gamma_P}(\mathbf{curl}, \Omega)) \times C^0([0,T]; \boldsymbol{L}^2(\Omega)) \\ (\boldsymbol{H}', \boldsymbol{H}'') \in C^0([0,T]; \boldsymbol{H}(\mathbf{curl}, \Omega)) \times C^0([0,T]; \boldsymbol{L}^2(\Omega)). \end{cases}$$

Hence, we derive $\boldsymbol{U}', \boldsymbol{V}' \in C^0([0,T]; \boldsymbol{L}^2(\Omega))$.
Using the second-order equations, we can relate $(\boldsymbol{U}', \boldsymbol{V}')$ to $(\mathbf{curl}\,\boldsymbol{U}, \mathbf{curl}\,\boldsymbol{V})$, by differentiating, in the sense of distributions in space and time,

$$\begin{aligned}
\boldsymbol{U}' - \mathbb{e}^{-1}\,\mathbf{curl}\,\boldsymbol{V} &= \boldsymbol{E}'' + \mathbb{e}^{-1}\boldsymbol{J}' + \mathbb{e}^{-1}\,\mathbf{curl}\,\mathbb{m}^{-1}\,\mathbf{curl}\,\boldsymbol{E} \\
&= \mathbb{e}^{-1}(\mathbb{e}\boldsymbol{E}'' + \boldsymbol{J}' + \mathbf{curl}\,\mathbb{m}^{-1}\,\mathbf{curl}\,\boldsymbol{E}) \overset{(7.24)}{=} 0\,; \\
\boldsymbol{V}' + \mathbb{m}^{-1}\,\mathbf{curl}\,\boldsymbol{U} &= -\boldsymbol{H}'' - \mathbb{m}^{-1}\,\mathbf{curl}\,\mathbb{e}^{-1}\,\mathbf{curl}\,\boldsymbol{H} + \mathbb{m}^{-1}\,\mathbf{curl}\,\mathbb{e}^{-1}\boldsymbol{J} \\
&= -\mathbb{m}^{-1}(\mathbb{m}\boldsymbol{H}'' + \mathbf{curl}\,\mathbb{e}^{-1}(\mathbf{curl}\,\boldsymbol{H} - \boldsymbol{J})) \overset{(7.22)}{=} 0.
\end{aligned}$$

In other words, we have

$$\mathbb{e}\boldsymbol{U}' - \mathbf{curl}\,\boldsymbol{V} = 0 \text{ and } \mathbb{m}\boldsymbol{V}' + \mathbf{curl}\,\boldsymbol{U} = 0.$$

Due to the regularity of $(\boldsymbol{U}', \boldsymbol{V}')$, we recover $\boldsymbol{U}, \boldsymbol{V} \in C^0([0,T]; \boldsymbol{H}(\mathbf{curl}, \Omega))$.
Let us finally investigate the boundary conditions fulfilled by the (tangential) components of $\boldsymbol{U}(t)$ and $\boldsymbol{V}(t)$, for $t \in [0,T]$. On Γ_P, we know, on the one hand, that $\boldsymbol{E}'(t) \in \boldsymbol{H}_{0,\Gamma_P}(\mathbf{curl}, \Omega)$, while on the other hand, condition (7.10) holds: we thus have $\boldsymbol{U}(t) \in \boldsymbol{H}_{0,\Gamma_P}(\mathbf{curl}, \Omega)$. Then, on Γ_A, we use the boundary conditions (7.13) and (7.14):

$$\begin{aligned}
\boldsymbol{U}(t) \times \boldsymbol{n} + \sqrt{\frac{\mu}{\varepsilon}}\boldsymbol{V}_\top(t) \quad &= \quad \left(\boldsymbol{E}'(t) \times \boldsymbol{n} - \frac{1}{\sqrt{\varepsilon\mu}}(\mathbf{curl}\,\boldsymbol{E})_\top(t)\right) \\
&\quad - \sqrt{\frac{\mu}{\varepsilon}}\left(\boldsymbol{H}'_\top(t) + \frac{1}{\sqrt{\varepsilon\mu}}(\mathbf{curl}\,\boldsymbol{H}(t) - \boldsymbol{J}(t)) \times \boldsymbol{n}\right) \\
&\overset{(7.13)-(7.14)}{=} (\boldsymbol{g}^\star)'(t) + \sqrt{\frac{\mu}{\varepsilon}}(\boldsymbol{k}^\star)'(t) \times \boldsymbol{n} = 0.
\end{aligned}$$

Hence, $\boldsymbol{U}(t) \times \boldsymbol{n} + (\mu/\varepsilon)^{1/2}\boldsymbol{V}_\top(t) = 0$ on Γ_A.
In other words, $\boldsymbol{U}, \boldsymbol{V}$ solve Ampère's and Faraday's laws (with 0 right-hand sides), plus 0 initial condition, and 0 boundary conditions, respectively, on Γ_P and Γ_A, with regularity $\boldsymbol{U}, \boldsymbol{V} \in C^0([0,T]; \boldsymbol{H}(\mathbf{curl}, \Omega))$ and $\boldsymbol{U}', \boldsymbol{V}' \in C^0([0,T]; \boldsymbol{L}^2(\Omega))$. The uniqueness of the solution to the first-order Maxwell equations for the truncated interior problem (§5.1.2) allows one to conclude that $\boldsymbol{U} = \boldsymbol{V} = 0$: $(\boldsymbol{E}, \boldsymbol{H})$ are governed by (7.1)–(7.2).

There remains to prove that the boundary condition (7.12) holds (in $\boldsymbol{L}^2_t(\Gamma_A)$, due to item 1 of Theorem 7.2.10). According to (7.36), this is true at $t = 0$. Then, if we use the additional regularity results on the fields (tangential traces are well-defined), the fact that $\boldsymbol{V}_\top = 0$ on Γ_A, and the boundary condition (7.13), we easily find, for $t > 0$,

$$\boldsymbol{E}'(t) \times \boldsymbol{n} + \sqrt{\frac{\mu}{\varepsilon}}\boldsymbol{H}'_\top(t) = \boldsymbol{E}'(t) \times \boldsymbol{n} - \frac{1}{\sqrt{\varepsilon\mu}}(\mathbf{curl}\,\boldsymbol{E})_\top(t) = (\boldsymbol{g}^\star)'(t).$$

According to Proposition 2.3.4, the boundary condition (5.20) is fulfilled for $t \in [0,T]$, which ends the proof. ■

Remark 7.3.2 *We could have performed the same study for the truncated exterior problem, or in a domain encased in a perfect conductor.*

7.3.2 One-field approach

Let us start from the second-order Maxwell equations, set in an inhomogeneous medium, with perfect conductor boundary conditions. Due to the well-posedness results of §7.2.1, these equations have one, and only one, solution $(\boldsymbol{E}, \boldsymbol{H})$. Below, we investigate a less standard approach than in the previous subsection: our aim is to recover the total solution to the first-order Maxwell equations, with the help of *only one* field among $\boldsymbol{E}$ and $\boldsymbol{H}$. More precisely, in the first instance, we only assume knowledge of the field $\boldsymbol{E}$, as a solution to the second-order equations. As already mentioned in Remark 7.2.6, similarly processing the second-order equations in $\boldsymbol{H}$ is slightly more difficult, due to the asymmetry between boundary conditions (for $\boldsymbol{H}$, it involves the tangential trace of $\mathbf{curl}\,\boldsymbol{H}$). In both cases, we build *ad hoc* vector potentials to recover the missing electromagnetic field. In this respect, this approach uses tools identical to those of §6.1 and §6.2 for static problems, which we refer to.

Theorem 7.3.3 *Consider a perfect medium in a domain $\Omega \subset \mathbb{R}^3$ encased in a perfect conductor, and an existence time $T > 0$. Let the tensor fields $\mathbb{e}$ and $\mathbb{p}$ satisfy* (5.10)*. For simplicity, we consider that* $(\mathbf{Top})_{I=0}$ *is fulfilled, and that its boundary Γ is connected.*[3] *Under the assumptions* (7.27) *and* (7.28)*, there exists one, and only one, field $\underline{\boldsymbol{H}}$ such that, together with the solution $\boldsymbol{E}$ to the second-order Maxwell equations, $(\boldsymbol{E}, \underline{\boldsymbol{H}})$ is the same as the solution to the first-order Maxwell equations.*

Proof. As a starting point, we know that the conclusions of items 1 and 2 of Theorem 7.2.4 hold for the field $\boldsymbol{E}$.
As a consequence, the field $\underline{\boldsymbol{D}} := \mathbb{e}\boldsymbol{E}$ is such that

$$(\underline{\boldsymbol{D}}, \underline{\boldsymbol{D}}') \in C^0([0,T]; \boldsymbol{L}^2(\Omega)) \times C^0([0,T]; \boldsymbol{L}^2(\Omega)).$$

On the other hand, if we let

$$\underline{\boldsymbol{B}}(t) := \mathbb{p}\boldsymbol{H}_0 - \int_0^t \mathbf{curl}\,\boldsymbol{E}(s)\,ds, \quad t \in [0,T],$$

then we have $\underline{\boldsymbol{B}}' \in C^0([0,T]; \boldsymbol{H}_0(\mathrm{div}, \Omega))$ with $\mathrm{div}\,\underline{\boldsymbol{B}}' = 0$; due to the assumptions about $\boldsymbol{H}_0$, $\underline{\boldsymbol{B}} \in C^0([0,T]; \boldsymbol{H}_0(\mathrm{div}, \Omega))$ with $\mathrm{div}\,\underline{\boldsymbol{B}} = 0$ follows.
Next, we remark that the field $\underline{\boldsymbol{D}}' + \boldsymbol{J}$ belongs to $C^0([0,T]; \boldsymbol{L}^2(\Omega))$, and moreover, the charge conservation equation implies that $\mathrm{div}(\underline{\boldsymbol{D}}' + \boldsymbol{J})(t) = 0$ for $t \geq 0$. So, according to Theorem 6.2.5, for $t \geq 0$, there exists a unique potential $\underline{\boldsymbol{H}}(t) \in \boldsymbol{H}_0(\mathrm{div}\,\mathbb{p}, \Omega)$ with $\mathrm{div}\,\mathbb{p}\underline{\boldsymbol{H}}(t) = 0$ and such that

[3] If this is not the case, we refer to §6.3.

$(\underline{\boldsymbol{D}}' + \boldsymbol{J})(t) = \mathbf{curl}\,\underline{\boldsymbol{H}}(t)$. By construction, $\mathbf{curl}\,\underline{\boldsymbol{H}} \in C^0([0,T];\boldsymbol{L}^2(\Omega))$. For $t = 0$, the initial condition (7.8) yields

$$(\underline{\boldsymbol{D}}' + \boldsymbol{J})(0) = \mathbb{e}\boldsymbol{E}_1 + \boldsymbol{J}(0) = \mathbf{curl}\,\boldsymbol{H}_0,$$

so $\underline{\boldsymbol{H}}(0) = \boldsymbol{H}_0$.

To end the proof, we need to establish some relation between $\underline{\boldsymbol{B}}$ and $\underline{\boldsymbol{H}}$: indeed, if $\mathbb{p}^{-1}\underline{\boldsymbol{B}} = \underline{\boldsymbol{H}}$ in *ad hoc* function spaces, then we conclude that $(\boldsymbol{E}, \underline{\boldsymbol{H}})$ is a solution to the first-order Maxwell equations with sufficient regularity, which is unique (cf. §5.1.2), so it is equal to the solution to the first-order equations.
For that, let us study $\boldsymbol{w} := \mathbb{p}^{-1}\underline{\boldsymbol{B}} - \underline{\boldsymbol{H}}$. We already know that $\boldsymbol{w}(0) = 0$, $\boldsymbol{w}(t) \in \boldsymbol{H}_0(\operatorname{div}\mathbb{p}, \Omega)$ with $\operatorname{div}\mathbb{p}\boldsymbol{w}(t) = 0$ for $t \geq 0$. If one also has $\mathbf{curl}\,\boldsymbol{w}(t) = 0$ for $t \geq 0$, then $\boldsymbol{w} = 0$ is a consequence of Theorem 6.2.5. Since we have $\mathbf{curl}\,\boldsymbol{w}(0) = 0$, it is enough to study the time derivative $\partial_t(\mathbf{curl}\,\boldsymbol{w})$:

$$\begin{aligned}\partial_t(\mathbf{curl}\,\boldsymbol{w}) &= \mathbf{curl}(\mathbb{p}^{-1}\partial_t\underline{\boldsymbol{B}}) - \partial_t(\mathbf{curl}\,\underline{\boldsymbol{H}})\\ &= -\,\mathbf{curl}(\mathbb{p}^{-1}\,\mathbf{curl}\,\boldsymbol{E}) - \partial_t(\partial_t\underline{\boldsymbol{D}} + \boldsymbol{J})\\ &= -\,\mathbf{curl}(\mathbb{p}^{-1}\,\mathbf{curl}\,\boldsymbol{E}) - \mathbb{e}\partial_{tt}\boldsymbol{E} - \boldsymbol{J}' \overset{(7.20)}{=} 0.\end{aligned}$$

Hence, $\underline{\boldsymbol{H}} = \mathbb{p}^{-1}\underline{\boldsymbol{B}}$ in $C^0([0,T];\boldsymbol{H}(\mathbf{curl},\Omega))$ with $\underline{\boldsymbol{H}}' \in C^0([0,T];\boldsymbol{L}^2(\Omega))$, which ends the proof. ■

Theorem 7.3.4 *Consider a perfect medium in a domain $\Omega \subset \mathbb{R}^3$ encased in a perfect conductor, and an existence time $T > 0$. Let the tensor fields $\mathbb{e}$ and $\mathbb{p}$ satisfy* (5.10)*. For simplicity, we consider that* $(\mathbf{Top})_{I=0}$ *is fulfilled, and that its boundary Γ is connected.*[4] *Under the assumptions* (7.27) *and* (7.28)*, there exists one, and only one, field $\underline{\boldsymbol{E}}$ such that, together with the solution $\boldsymbol{H}$ to the second-order Maxwell equations, $(\underline{\boldsymbol{E}}, \boldsymbol{H})$ is the same as the solution to the first-order Maxwell equations.*

Proof. The conclusions of items 1 and 2 of Theorem 7.2.4 hold for the field $\boldsymbol{H}$, so the field $\underline{\boldsymbol{B}} := \mathbb{p}\boldsymbol{H}$ is such that

$$(\underline{\boldsymbol{B}}, \underline{\boldsymbol{B}}') \in C^0([0,T];\boldsymbol{H}_0(\operatorname{div},\Omega)) \times C^0([0,T];\boldsymbol{H}_0(\operatorname{div},\Omega)), \text{ with } \operatorname{div}\underline{\boldsymbol{B}} = 0.$$

So, for $t \geq 0$, $\underline{\boldsymbol{B}}'(t)$ is divergence-free with vanishing normal trace, and $\varrho(t) \in H^{-1}(\Omega)$ (cf. (7.28)). According to Theorem 6.1.4, there exists a (unique) potential $\underline{\boldsymbol{E}}(t) \in \boldsymbol{H}_0(\mathbf{curl},\Omega)$ such that

$$\mathbf{curl}\,\underline{\boldsymbol{E}}(t) = -\underline{\boldsymbol{B}}'(t) \text{ and } \operatorname{div}\mathbb{e}\,\underline{\boldsymbol{E}}(t) = \varrho(t).$$

One has $\mathbf{curl}\,\underline{\boldsymbol{E}}(t) \in C^0([0,T];\boldsymbol{L}^2(\Omega))$, and $\underline{\boldsymbol{E}}(t) \in \boldsymbol{H}_0(\mathbf{curl},\Omega)$ for $t \geq 0$. In addition, notice that $\underline{\boldsymbol{E}}(0) = \boldsymbol{E}_0$ according to the initial condition (7.9), to

[4] See footnote [3], p. 270.

assumption (7.28), and to the uniqueness of the potential.
Next, consider

$$\underline{\boldsymbol{D}}(t) := \mathbb{e}\boldsymbol{E}_0 + \int_0^t (\mathbf{curl}\,\boldsymbol{H} - \boldsymbol{J})(s)\,ds, \quad t \in [0,T].$$

It holds that $\underline{\boldsymbol{D}}' \in C^0([0,T];\boldsymbol{L}^2(\Omega))$; $\underline{\boldsymbol{D}} \in C^0([0,T];\boldsymbol{L}^2(\Omega))$.
To end the proof, we now compare $\underline{\boldsymbol{E}}$ to $\mathbb{e}^{-1}\underline{\boldsymbol{D}}$. To begin with, we compute the curl of $\mathbb{e}^{-1}\underline{\boldsymbol{D}}$, together with its tangential trace. For that, we use Eq. (7.17) for any $\boldsymbol{w} \in \boldsymbol{H}(\mathbf{curl},\Omega)$, which we integrate in time over $]0,t[$. Thanks to the regularity of $\boldsymbol{H}'(t)$, we can write:

$$(\mathbb{\mu}(\boldsymbol{H}'(t) - \boldsymbol{H}'(0))|\boldsymbol{w}) + (\mathbb{e}^{-1}\int_0^t (\mathbf{curl}\,\boldsymbol{H}(s) - \boldsymbol{J}(s))\,ds|\,\mathbf{curl}\,\boldsymbol{w}) = 0.$$

Using the initial condition (7.9) and the definition of $\underline{\boldsymbol{D}}(t)$, we reach

$$\begin{aligned} 0 &= (\mathbb{\mu}\boldsymbol{H}'(t) + \mathbf{curl}\,\boldsymbol{E}_0|\boldsymbol{w}) + (\mathbb{e}^{-1}\underline{\boldsymbol{D}}(t) - \boldsymbol{E}_0|\,\mathbf{curl}\,\boldsymbol{w}) \\ &= (\mathbb{\mu}\boldsymbol{H}'(t)|\boldsymbol{w}) + (\mathbb{e}^{-1}\underline{\boldsymbol{D}}(t)|\,\mathbf{curl}\,\boldsymbol{w}), \end{aligned}$$

after integration by parts to remove the terms in $\boldsymbol{E}_0$.
Taking test functions $\boldsymbol{w} \in \boldsymbol{D}(\Omega)$, we obtain that $\mathbf{curl}\,\mathbb{e}^{-1}\underline{\boldsymbol{D}}(t) = -\mathbb{\mu}\boldsymbol{H}'(t)$, in $\boldsymbol{L}^2(\Omega)$. As a consequence, $\mathbb{e}^{-1}\underline{\boldsymbol{D}}(t)$ belongs to $\boldsymbol{H}(\mathbf{curl},\Omega)$, and taking any $\boldsymbol{w} \in \boldsymbol{H}(\mathbf{curl},\Omega)$ yields that the tangential trace of $\mathbb{e}^{-1}\underline{\boldsymbol{D}}(t)$ vanishes on Γ, hence $\mathbb{e}^{-1}\underline{\boldsymbol{D}}(t) \in \boldsymbol{H}_0(\mathbf{curl},\Omega)$.
So far, for $t \geq 0$, we have that $\underline{\boldsymbol{E}}(t), \mathbb{e}^{-1}\underline{\boldsymbol{D}}(t) \in \boldsymbol{H}_0(\mathbf{curl},\Omega)$, with $\mathbf{curl}\,\underline{\boldsymbol{E}}(t) = \mathbf{curl}\,\mathbb{e}^{-1}\underline{\boldsymbol{D}}(t)$. To prove that $\underline{\boldsymbol{E}}(t)$ and $\mathbb{e}^{-1}\underline{\boldsymbol{D}}(t)$ are actually equal, we only need to compare their divergence(ε), cf. Theorem 6.1.4. On the one hand, we know that $\operatorname{div}\mathbb{e}\,\underline{\boldsymbol{E}}(t) = \varrho(t)$, while on the other hand, we find

$$\operatorname{div}\underline{\boldsymbol{D}}(t) = \operatorname{div}\mathbb{e}\boldsymbol{E}_0 - \int_0^t \operatorname{div}\boldsymbol{J}(s)\,ds \overset{(7.28)}{=} \varrho(t).$$

As before we conclude that $(\underline{\boldsymbol{E}}, \boldsymbol{H})$ solve the first-order Maxwell equations and are regular enough. Thus, they are equal to the unique solution of those equations (cf. §5.1.2). ■

Remark 7.3.5 *In the proof of Theorem 7.3.4, we integrate in time to compensate for the lack of regularity in space of* $\boldsymbol{J}$ *and* $\boldsymbol{H}$.

7.4 Other variational formulations

In this section, we collect and discuss various alternative variational formulations of the second-order Maxwell equations. Under suitable assumptions, the electromagnetic fields solution to the second-order "plain" variational formulations of §7.1 (themselves equivalent to the first-order semi-group formulations

of §5.2) appear also to be solutions to these new formulations. As a consequence, there only remains to show that the latter are well-posed. In §§7.4.1 and 7.4.2, we only present the case of a domain encased in a perfect conductor. However, the same approach can be applied to the truncated exterior and interior problems: the variational formulations are modified in a similar fashion, and well-posedness is proved in the same way.

7.4.1 Augmented formulations

Consider the electromagnetic fields $(\boldsymbol{E}, \boldsymbol{H})$ given by Theorem 7.2.4, under its assumptions (7.27) and (7.28). As noted there, the magnetic field $\boldsymbol{H}$ is divergence(μ)-free, so it belongs to $C^0([0,T]; \boldsymbol{X}_T(\Omega; \mathbb{\mu}))$, where $\boldsymbol{X}_T(\Omega; \mathbb{\mu})$ is defined as in (6.25). Introducing the "augmented" sesquilinear form

$$\tilde{a}_H(\boldsymbol{v}, \boldsymbol{w}) = (\mathbb{\varepsilon}^{-1} \,\mathbf{curl}\, \boldsymbol{v} | \,\mathbf{curl}\, \boldsymbol{w}) + (\operatorname{div} \mathbb{\mu} \boldsymbol{v} \mid \operatorname{div} \mathbb{\mu} \boldsymbol{w}),$$

one sees that $\boldsymbol{H}$ satisfies the evolution equation:

$$\begin{aligned} &\forall \boldsymbol{w} \in \boldsymbol{X}_T(\Omega; \mathbb{\mu}), \\ &\frac{d^2}{dt^2} \{(\mathbb{\mu} \boldsymbol{H}(t) | \boldsymbol{w})\} + \tilde{a}_H(\boldsymbol{H}(t), \boldsymbol{w}) \\ &\qquad\qquad = (\mathbb{\varepsilon}^{-1} \boldsymbol{J}(t) | \,\mathbf{curl}\, \boldsymbol{w}) \text{ in } \mathcal{D}'(]0,T[), \end{aligned} \tag{7.37}$$

with the initial conditions (7.5, right) and (7.9). Repeating the proof of Lemma 7.2.2, one easily obtains an energy inequality in the variational space $\tilde{\mathcal{V}}_H = \boldsymbol{X}_T(\Omega; \mathbb{\mu})$ (and the pivot space $\mathcal{H}_H = \boldsymbol{L}^2(\Omega)$, with its two scalar products $(\cdot|\cdot)$ and ${}_2(\cdot,\cdot)_{\mathcal{H}_H}$, as in §7.2).

Similarly, assume that the charge density $\varrho \in C^0([0,T]; H^{-s}(\Omega))$, for $s \in [0,1]$. Owing to the divergence condition (7.3), the electric field $\boldsymbol{E}$ belongs to $C^0([0,T]; \boldsymbol{X}_{N,-s}(\Omega; \mathbb{\varepsilon}))$, where $\boldsymbol{X}_{N,-s}(\Omega; \mathbb{\varepsilon})$ is defined as in (6.4). Introducing the "augmented" sesquilinear form

$$\tilde{a}_E(\boldsymbol{v}, \boldsymbol{w}) = (\mathbb{\mu}^{-1} \,\mathbf{curl}\, \boldsymbol{v} | \,\mathbf{curl}\, \boldsymbol{w}) + (\operatorname{div} \mathbb{\varepsilon} \boldsymbol{v}, \operatorname{div} \mathbb{\varepsilon} \boldsymbol{w})_{H^{-s}(\Omega)},$$

it follows that $\boldsymbol{E}$ satisfies the evolution equation:

$$\begin{aligned} &\forall \boldsymbol{w} \in \boldsymbol{X}_{N,-s}(\Omega; \mathbb{\varepsilon}), \\ &\frac{d^2}{dt^2} \{(\mathbb{\varepsilon} \boldsymbol{E}(t) | \boldsymbol{w})\} + \tilde{a}_E(\boldsymbol{E}(t), \boldsymbol{w}) \\ &\qquad = -\frac{d}{dt} \{(\boldsymbol{J}(t) | \boldsymbol{w})\} + (\varrho(t), \operatorname{div} \mathbb{\varepsilon} \boldsymbol{w})_{H^{-s}(\Omega)} \text{ in } \mathcal{D}'(]0,T[), \end{aligned} \tag{7.38}$$

with the initial conditions (7.5, left) and (7.8).
Assuming the extra regularity

$$\varrho \in L^2(0,T; H_0^1(\Omega)) \cap C^0([0,T]; L^2(\Omega)), \tag{7.39}$$

and setting $s = 0$, one can integrate by parts the last term in (7.38) using (2.21). Thus, the formulation fits into the framework of Corollary 4.3.15, with:

- the space $\mathcal{H}_E = \boldsymbol{L}^2(\Omega)$, its two scalar products $(\cdot|\cdot)$ and ${}_2(\cdot,\cdot)_{\mathcal{H}_E}$, as in §7.2;
- the space $\tilde{\mathcal{V}}_E = \boldsymbol{X}_{N,0}(\Omega;\mathbb{c}) = \boldsymbol{X}_N(\Omega;\mathbb{c})$, as in (6.5), endowed with the sesquilinear form $\tilde{a}_E(\cdot,\cdot)$ with $s=0$;
- the right-hand side $\mathtt{f}_E = -\boldsymbol{J}' - \mathbb{c}\,\mathbf{grad}\,\varrho \in L^2(0,T;\boldsymbol{L}^2(\Omega))$.

A possible generalisation of (7.39) when $s \neq 0$ is $\varrho^\sharp \in L^2(0,T;H_0^1(\Omega)) \cap C^0([0,T];L^2(\Omega))$, where $^\sharp$ denotes the "canonical" isomorphism[5] between $H^{-s}(\Omega)$ and $H_0^s(\Omega)$; in that case, $\mathtt{f}_E = -\boldsymbol{J}' - \mathbb{c}\,\mathbf{grad}\,\varrho^\sharp$. Alternatively, one can use the energy inequality method, under a slightly different regularity assumption. We revert to an arbitrary $s \in [0,1]$, and we set $\tilde{\mathcal{V}}_E := \boldsymbol{X}_{N,-s}(\Omega;\mathbb{c})$, endowed (for the moment) with its graph norm. For the sake of simplicity, we shall often denote the scalar product and norm of $H^{-s}(\Omega)$ as $(\cdot,\cdot)_{-s}$ and $\|\cdot\|_{-s}$.

Lemma 7.4.1 *If the charge density has the regularity*

$$\varrho \in H^1(0,T;H^{-s}(\Omega)), \tag{7.40}$$

the field $\boldsymbol{E}$ fulfills an energy inequality:

$$\begin{aligned}\|\boldsymbol{E}\|^2_{W^{1,\infty}(0,T;\boldsymbol{L}^2(\Omega))} + \|\boldsymbol{E}\|^2_{L^\infty(0,T;\tilde{\mathcal{V}}_E)} \\ \leq C_T\left\{C'_{ic} + \int_0^T \|\boldsymbol{J}'(t)\|^2\,dt + \int_0^T \|\varrho'(t)\|^2_{H^{-s}(\Omega)}\,dt\right\},\end{aligned}$$

where C'_{ic} depends on the initial conditions and $\|\varrho(0)\|_{H^{-s}(\Omega)}$, and C_T depends on T and the coefficients $\mathbb{c}$, $\mathbb{\mu}$.

Proof. As in the introductory part of §7.2, we first find that, for $\Theta \in]0,T[$,

$$\begin{aligned}{}_2\|\boldsymbol{E}'(\Theta)\|^2_{\mathcal{H}_E} + \tilde{a}_E(\boldsymbol{E}(\Theta),\boldsymbol{E}(\Theta)) + \|\boldsymbol{E}(\Theta)\|^2 = C_{ic} - 2\int_0^\Theta \Re\{(\boldsymbol{J}'(t)|\boldsymbol{E}'(t))\}\,dt \\ + 2\int_0^\Theta \Re\{(\varrho(t),\operatorname{div}\mathbb{c}\boldsymbol{E}'(t))_{-s}\}\,dt + 2\int_0^\Theta \Re\{(\boldsymbol{E}(t)|\boldsymbol{E}'(t))\}\,dt,\end{aligned} \tag{7.41}$$

where $C_{ic} := {}_2\|\boldsymbol{E}_1\|^2_{\mathcal{H}_E} + \tilde{a}_E(\boldsymbol{E}_0,\boldsymbol{E}_0) + \|\boldsymbol{E}_0\|^2$. The second and fourth terms in the r.h.s. are handled as usual. To tackle the non-standard term involving the data ϱ, we integrate by parts in time, as in Lemma 7.2.2:

$$\begin{aligned}2\int_0^\Theta \Re\{(\varrho(t),\operatorname{div}\mathbb{c}\boldsymbol{E}'(t))_{-s}\}\,dt = -2\int_0^\Theta \Re\{(\varrho'(t),\operatorname{div}\mathbb{c}\boldsymbol{E}(t))_{-s}\}\,dt \\ + 2\Re\{(\varrho(\Theta),\operatorname{div}\mathbb{c}\boldsymbol{E}(\Theta))_{-s}\} - 2\Re\{(\varrho(0),\operatorname{div}\mathbb{c}\boldsymbol{E}_0)_{-s}\}.\end{aligned}$$

The last term is added to C_{ic}, whereas the integral term is bounded as:

[5] Given $g \in H^{-s}(\Omega)$, let $g^\sharp \in H_0^s(\Omega)$ be defined by the condition

$$\langle g^\sharp, g'\rangle_{H^{-s}(\Omega)} = (g,g')_{H^{-s}(\Omega)}, \quad \forall g' \in H^{-s}(\Omega).$$

The isomorphism $^\sharp$ reduces to the identity if $s=0$.

$$-2\int_0^\Theta \Re\{(\varrho'(t), \operatorname{div}\mathbb{c}\boldsymbol{E}(t))_{-s}\}\,dt \le \int_0^\Theta \|\varrho'(t)\|_{-s}^2\,dt + \int_0^\Theta \|\operatorname{div}\mathbb{c}\boldsymbol{E}(t)\|_{-s}^2\,dt.$$

As for the "boundary" term at $t=\Theta$, it is bounded by:

$$2\Re\{(\varrho(\Theta), \operatorname{div}\mathbb{c}\boldsymbol{E}(\Theta))_{-s}\} \le 2\,\|\varrho(\Theta)\|_{-s}^2 + \tfrac{1}{2}\tilde{a}_E(\boldsymbol{E}(\Theta), \boldsymbol{E}(\Theta)).$$

The term $\frac{1}{2}\tilde{a}_E(\boldsymbol{E}(\Theta), \boldsymbol{E}(\Theta))$ will be absorbed by the left-hand side of (7.41). On the other hand,

$$\begin{aligned}
\|\varrho(\Theta)\|_{-s} &= \left\| \int_0^\Theta \varrho'(t)\,dt + \varrho(0) \right\|_{-s} \\
&\le \int_0^\Theta \|\varrho'(t)\|_{-s}\,dt + \|\varrho(0)\|_{-s} \\
&\le \Theta^{1/2} \left(\int_0^\Theta \|\varrho'(t)\|_{-s}^2\,dt \right)^{1/2} + \|\varrho(0)\|_{-s}.
\end{aligned}$$

Hence, $2\,\|\varrho'(\Theta)\|_{-s}^2 \le 4\Theta \displaystyle\int_0^\Theta \|\varrho'(t)\|_{-s}^2\,dt + 4\|\varrho(0)\|_{-s}^2$.
Putting everything back in (7.41), we find that

$$\begin{aligned}
&{}_2\|\boldsymbol{E}'(\Theta)\|_{\mathcal{H}_E}^2 + \min(\frac{1}{2}, \frac{1}{2\mu_+})\,\|\boldsymbol{E}(\Theta)\|_{\tilde{\mathcal{V}}_E}^2 \\
&\quad \le {}_2\|\boldsymbol{E}'(\Theta)\|_{\mathcal{H}_E}^2 + \frac{1}{2}\tilde{a}_E(\boldsymbol{E}(\Theta), \boldsymbol{E}(\Theta)) + \|\boldsymbol{E}(\Theta)\|^2 \\
&\quad \le C'_{ic} + \int_0^\Theta \|\boldsymbol{J}'(t)\|^2 dt + (1+4T)\int_0^\Theta \|\varrho'(t)\|_{-s}^2\,dt \\
&\qquad\qquad + \int_0^\Theta \left(2\|\boldsymbol{E}'(t)\|^2 + \|\boldsymbol{E}(t)\|^2 + \|\operatorname{div}\mathbb{c}\boldsymbol{E}(t)\|_{-s}^2\right)\,dt \\
&\quad \le C'_{ic} + \int_0^\Theta \|\boldsymbol{J}'(t)\|^2 dt + (1+4T)\int_0^\Theta \|\varrho'(t)\|_{-s}^2\,dt \\
&\qquad\qquad + C_1 \int_0^\Theta \left({}_2\|\boldsymbol{E}'(t)\|^2 + \|\boldsymbol{E}(t)\|_{\tilde{\mathcal{V}}_E}^2\right)\,dt,
\end{aligned}$$

where C'_{ic} gathers the constants depending on the initial data. We conclude by using Gronwall's Lemma 7.2.1. ■

With the above arguments, one can prove the counterpart of Theorem 7.2.4. For brevity, we handle both cases $s=0$ (cf. (7.39)) and $s \ne 0$ (cf. (7.40)) at once.

Theorem 7.4.2 *Consider a perfect medium in a domain $\Omega \subset \mathbb{R}^3$ encased in a perfect conductor, and an existence time $T>0$. Let the tensor fields $\mathbb{c}$ and $\mathbb{\mu}$ satisfy* (5.10).

1. *Assume that*

$$\begin{cases} \boldsymbol{E}_0 \in \boldsymbol{X}_{N,-s}(\Omega;\mathbb{e}),\ \ \boldsymbol{H}_0 \in \boldsymbol{X}_T(\Omega;\mathbb{\mu}), \\ \boldsymbol{J} \in H^1(0,T;\boldsymbol{L}^2(\Omega)), \end{cases} \tag{7.42}$$

plus either (7.39) *or* (7.40)*; then, there exists one, and only one, couple of fields* $(\boldsymbol{E},\boldsymbol{H})$*:*

$$\begin{cases} (\boldsymbol{E},\boldsymbol{E}') \in C^0([0,T];\boldsymbol{X}_{N,-s}(\Omega;\mathbb{e})) \times C^0([0,T];\boldsymbol{L}^2(\Omega)), \\ (\boldsymbol{H},\boldsymbol{H}') \in C^0([0,T];\boldsymbol{X}_T(\Omega;\mathbb{\mu})) \times C^0([0,T];\boldsymbol{L}^2(\Omega)), \end{cases} \tag{7.43}$$

which solves the variational formulations (7.37) *and* (7.38)*.*

2. *Assume, in addition to 1, that* (7.28) *holds, with* $\varrho(0) \in H^{-s}(\Omega)$*. Then, there exists one, and only one, couple of fields* $(\boldsymbol{E},\boldsymbol{H})$*:*

$$\begin{cases} (\boldsymbol{E},\boldsymbol{E}') \in C^0([0,T];\boldsymbol{X}_{N,-s}(\Omega;\mathbb{e})) \times C^0([0,T];\boldsymbol{L}^2(\Omega)), \\ (\boldsymbol{H},\boldsymbol{H}') \in C^0([0,T];\boldsymbol{X}_T(\Omega;\mathbb{\mu})) \\ \qquad\qquad\qquad\qquad \times C^0([0,T];\boldsymbol{H}_0(\operatorname{div}\mathbb{\mu},\Omega)), \end{cases} \tag{7.44}$$

which solves the second-order system of equations (7.6)–(7.7) *and the divergence conditions* (7.3)–(7.4)*,* (7.5) *and* (7.8)–(7.9)*, supplemented with boundary conditions* (5.8) *and* (5.9)*.*

3. *Assume, in addition to 1 and 2, that* (7.30) *holds. Then, the couple of fields* $(\boldsymbol{E},\boldsymbol{H})$ *fulfills the boundary condition* (7.10)*.*

In all instances, the couple of fields $(\boldsymbol{E},\boldsymbol{H})$ *depends continuously on the data.*

Another approach for proving well-posedness follows from §7.6 below.

7.4.2 Mixed formulations

In practice, it may happen that the charge conservation equation, and/or the constraints on the initial data are not exactly fulfilled. This may be caused by inexact knowledge of the model and data (uncertainties, etc.), or on their approximation for numerical purposes [82]. As a consequence, there is no solution to the whole system of Maxwell's equations, as the divergence equations and the evolution equations cannot be simultaneously satisfied. A possible remedy is to explicitly enforce the divergence equations through Lagrange multipliers, as at the end of §4.3.

Mixed unaugmented formulation

Under assumptions (7.27) and (7.28) of Theorem 7.2.4, the solution $(\boldsymbol{E},\boldsymbol{H})$ to the plain formulations fulfills the divergence equations (7.3)–(7.4). Setting $P_E = 0$ and $P_H = 0$, we see that the couples $(\boldsymbol{E}, P_E)$ and $(\boldsymbol{H}, P_H)$ appear to be solutions to the mixed time-dependent systems:

$$\begin{aligned}
&\forall \boldsymbol{w} \in \boldsymbol{H}_0(\mathbf{curl}, \Omega),\\
&\frac{d^2}{dt^2}\{(\mathbb{e}\boldsymbol{E}(t)|\boldsymbol{w})\} + (\mathbb{\mu}^{-1}\,\mathbf{curl}\,\boldsymbol{E}(t)|\,\mathbf{curl}\,\boldsymbol{w}) - \overline{(\mathbf{grad}\,P_E(t) \mid \mathbb{e}\boldsymbol{w})}\\
&\qquad\qquad = -\frac{d}{dt}\{(\boldsymbol{J}(t)|\boldsymbol{w})\} \text{ in } \mathcal{D}'(]0,T[)\,,\\
&\forall q \in H^1_0(\Omega), \qquad -(\mathbb{e}\boldsymbol{E}(t) \mid \mathbf{grad}\,q) = \langle \varrho(t), q\rangle_{H^1_0(\Omega)} \text{ in } \mathcal{D}'(]0,T[).
\end{aligned} \tag{7.45}$$

And

$$\begin{aligned}
&\forall \boldsymbol{w} \in \boldsymbol{H}(\mathbf{curl}, \Omega),\\
&\frac{d^2}{dt^2}\{(\mathbb{\mu}\boldsymbol{H}(t)|\boldsymbol{w})\} + (\mathbb{e}^{-1}\,\mathbf{curl}\,\boldsymbol{H}(t)|\,\mathbf{curl}\,\boldsymbol{w}) - \overline{(\mathbf{grad}\,P_H(t) \mid \mathbb{\mu}\boldsymbol{w})}\\
&\qquad\qquad = (\mathbb{e}^{-1}\boldsymbol{J}(t)|\,\mathbf{curl}\,\boldsymbol{w}) \text{ in } \mathcal{D}'(]0,T[)\,,\\
&\forall q \in H^1_{zmv}(\Omega), \qquad -(\mathbb{\mu}\boldsymbol{H}(t) \mid \mathbf{grad}\,q) = 0 \text{ in } \mathcal{D}'(]0,T[).
\end{aligned} \tag{7.46}$$

As we shall see, the electric field formulation (7.45) fits into the framework of Theorems 4.3.19 or 4.3.22 on constrained time-dependent formulations. The magnetic field formulation (7.46) does not, again because of the right-hand side. However, at the core of the proof of these theorems lies the well-posedness of an unconstrained formulation set in a kernel. The latter follows thanks to the energy inequality of Lemma 7.2.2.

In this paragraph, we use the same spaces $\mathcal{H}_E = \mathcal{H}_H = \boldsymbol{L}^2(\Omega)$, $\mathcal{V}_E = \boldsymbol{H}_0(\mathbf{curl}, \Omega)$ and $\mathcal{V}_H = \boldsymbol{H}(\mathbf{curl}, \Omega)$, the same scalar products $(\cdot,\cdot)_{\mathcal{H}_E} = (\cdot,\cdot)_{\mathcal{H}_H} = (\cdot \mid \cdot)$, ${}_2(\cdot,\cdot)_{\mathcal{H}_E}$, and ${}_2(\cdot,\cdot)_{\mathcal{H}_H}$, and sesquilinear forms a_E, a_H as in the plain formulation of §7.2. Then, we set $\mathcal{Q}_E := H^1_0(\Omega)$ and define the following sesquilinear form on $\mathcal{V}_E \times \mathcal{Q}_E$:

$$b_E(\boldsymbol{v}, q) := -(\mathbb{e}\boldsymbol{v} \mid \mathbf{grad}\,q).$$

Obviously, $b_E(\cdot,\cdot)$ immediately extends to $(\boldsymbol{v}, q) \in \boldsymbol{L}^2(\Omega) \times H^1_0(\Omega)$: in the language of §4.3, we have $\mathcal{Q}_{E,w} = \mathcal{Q}_E$ and $b_{E,w}(\boldsymbol{v}, q) := -(\mathbb{e}\boldsymbol{v} \mid \mathbf{grad}\,q)$ again. In other words, the operator

$$\mathtt{B}^\dagger_E : H^1_0(\Omega) \longrightarrow \boldsymbol{H}_0(\mathbf{curl}, \Omega)', \qquad q \longmapsto -\mathbb{e}\,\mathbf{grad}\,q$$

has its range included in $\boldsymbol{L}^2(\Omega)$, and thus coincides with $\mathtt{B}^\dagger_{E,w}$. In an isotropic medium, where $\mathbb{e}$ is scalar-valued, the range is even included in $\boldsymbol{H}_0(\mathbf{curl}, \Omega)$ if $\varepsilon \in W^{1,\infty}(\Omega)$: it holds that

$$\mathbf{curl}(\varepsilon\,\mathbf{grad}\,q) = \mathbf{grad}\,\varepsilon \times \mathbf{grad}\,q + \varepsilon\,\underbrace{\mathbf{curl}\,\mathbf{grad}\,q}_{0} \in \boldsymbol{L}^2(\Omega),$$

while $\varepsilon\,\mathbf{grad}\,q \times \boldsymbol{n} = 0$ on Γ by Proposition 2.2.10. In this case, $\mathcal{Q}_{E,ww} = \mathcal{Q}_E$ and $b_{E,ww}(\boldsymbol{v}, q) = -\langle \boldsymbol{v}, \varepsilon\,\mathbf{grad}\,q\rangle_{\boldsymbol{H}_0(\mathbf{curl},\Omega)}$ for $\boldsymbol{v} \in \boldsymbol{H}_0(\mathbf{curl}, \Omega)'$. In an anisotropic medium, or in the presence of material discontinuities, $\mathcal{Q}_{E,ww}$ may be strictly included in $\mathcal{Q}_{E,w} = \mathcal{Q}_E$ and difficult to characterise. This is no big issue (see Remark 4.3.23).

Similarly, we set $\mathcal{Q}_H := H^1_{zmv}(\Omega)$ and define the sesquilinear form

$$b_H(\boldsymbol{v}, q) := -(\mathbb{\mu}\boldsymbol{v} \mid \mathbf{grad}\, q)$$

on $\mathcal{V}_H \times \mathcal{Q}_H$, which is immediately extended to $b_{H,w}$ on $\mathcal{H}_H \times \mathcal{Q}_{H,w}$, with $\mathcal{Q}_{H,w} = \mathcal{Q}_H$, as in the electric case. In an isotropic and smoothly varying medium, the second extension satisfies $\mathcal{Q}_{H,ww} = \mathcal{Q}_H$ and $b_{H,ww}(\boldsymbol{v}, q) = -\langle \boldsymbol{v}, \mu\, \mathbf{grad}\, q\rangle_{\boldsymbol{H}(\mathbf{curl},\Omega)}$ for $\boldsymbol{v} \in \boldsymbol{H}(\mathbf{curl}, \Omega)'$.

In Propositions 6.1.8 and 6.2.7, it is proved (in a slightly generalised framework) that the forms $b_E,\ b_{E,w},\ b_H,\ b_{H,w}$ satisfy an inf-sup condition in their respective spaces. We proceed with the double orthogonality property. Using the integration-by-parts formula (2.21), one sees that the kernels of the forms b_E and $b_{E,w}$ are, respectively,

$$\mathcal{K}_E = \boldsymbol{K}_N(\Omega; \mathbb{\varepsilon}) \text{ as in (6.15)} \quad \text{and} \quad \mathcal{L}_E = \boldsymbol{H}(\operatorname{div} \mathbb{\varepsilon} 0, \Omega).$$

On the other hand, using (2.25), one shows that the kernels of the forms b_H and $b_{H,w}$ are, respectively,

$$\mathcal{K}_H = \boldsymbol{K}_T(\Omega; \mathbb{\mu}) \text{ as in (6.36)} \quad \text{and} \quad \mathcal{L}_H = \boldsymbol{H}_0(\operatorname{div} \mathbb{\mu} 0, \Omega).$$

Proceeding as in §3.7, one arrives at the following Helmholtz decompositions. They are comparable to Propositions 6.1.10 and 6.1.12 (electric field), respectively to Proposition 6.2.12 and (6.37) (magnetic field), but stated differently below.

Proposition 7.4.3 *Let Ω be a domain, and let the tensor fields $\mathbb{\varepsilon}$ and $\mathbb{\mu}$ satisfy* (5.10)*. The following decompositions of the spaces $\boldsymbol{L}^2(\Omega)$ and $\boldsymbol{H}_0(\mathbf{curl}, \Omega)$ hold:*

$$\begin{aligned} \boldsymbol{L}^2(\Omega) &= \mathbf{grad}[H^1_0(\Omega)] \overset{\perp}{\oplus} \boldsymbol{H}(\operatorname{div} \mathbb{\varepsilon} 0, \Omega)\,; \\ \boldsymbol{H}_0(\mathbf{curl}, \Omega) &= \mathbf{grad}[H^1_0(\Omega)] \overset{\perp}{\oplus} \boldsymbol{K}_N(\Omega; \mathbb{\varepsilon}). \end{aligned} \tag{7.47}$$

In both equalities, orthogonality holds in the sense of the scalar product ${}_2(\cdot,\cdot)_{\mathcal{H}_E} = (\mathbb{\varepsilon}\cdot \mid \cdot)$. In (7.47)*, the subspaces are also orthogonal with respect to the sesquilinear form $a_E(\cdot,\cdot) = (\mathbb{\mu}^{-1}\, \mathbf{curl}\, \cdot \mid \mathbf{curl}\, \cdot)$.*

Proposition 7.4.4 *Let Ω be a domain, and let the tensor fields $\mathbb{\varepsilon}$ and $\mathbb{\mu}$ satisfy* (5.10)*. The following decompositions of the spaces $\boldsymbol{L}^2(\Omega)$ and $\boldsymbol{H}(\mathbf{curl}, \Omega)$ hold:*

$$\begin{aligned} \boldsymbol{L}^2(\Omega) &= \mathbf{grad}[H^1_{zmv}(\Omega)] \overset{\perp}{\oplus} \boldsymbol{H}_0(\operatorname{div} \mathbb{\mu} 0, \Omega)\,; \\ \boldsymbol{H}(\mathbf{curl}, \Omega) &= \mathbf{grad}[H^1_{zmv}(\Omega)] \overset{\perp}{\oplus} \boldsymbol{K}_T(\Omega; \mathbb{\mu}). \end{aligned} \tag{7.48}$$

In both equalities, orthogonality holds in the sense of the scalar product ${}_2(\cdot,\cdot)_{\mathcal{H}_H} = (\mathbb{\mu}\cdot \mid \cdot)$. In (7.48)*, the subspaces are also orthogonal with respect to the sesquilinear form $a_H(\cdot,\cdot) = (\mathbb{\varepsilon}^{-1}\, \mathbf{curl}\, \cdot \mid \mathbf{curl}\, \cdot)$.*

Using Theorem 4.3.22 and Remark 4.3.23 for the electric field, and the suitable adaptation for the magnetic field, one arrives at the following results.

Theorem 7.4.5 *Consider a perfect medium in a domain $\Omega \subset \mathbb{R}^3$ encased in a perfect conductor, and an existence time $T > 0$. Let the tensor fields $\mathbb{e}$ and $\mathbb{\mu}$ satisfy* (5.10).

1. *Assume* (7.27) *and*

$$\begin{cases} \varrho \in H^2(0,T;H^{-1}(\Omega))\,; \\ \operatorname{div} \mathbb{e}\boldsymbol{E}_0 = \varrho(0), \quad \varrho'(0) + \operatorname{div} \boldsymbol{J}(0) = 0\,; \\ \operatorname{div} \mathbb{\mu}\boldsymbol{H}_0 = 0, \quad \mathbb{\mu}\boldsymbol{H}_0 \cdot \boldsymbol{n}_{|\Gamma} = 0. \end{cases} \tag{7.49}$$

   There exists one, and only one, quadruple of fields and multipliers $((\boldsymbol{E}, P_E), (\boldsymbol{H}, P_H))$, *with the regularity* (7.29) *and*

$$P_E \in L^2(0,T;H_0^1(\Omega)), \quad P_H \in L^2(0,T;H^1_{zmv}(\Omega)),$$

   which solves the variational formulations (7.45) *and* (7.46).
2. *Assume, in addition to 1, that the charge conservation equation*

$$\frac{\partial \varrho}{\partial t} + \operatorname{div} \boldsymbol{J} = 0 \quad \textit{holds for} \quad t \geq 0.$$

   Then, $P_E = P_H = 0$, and there exists one, and only one, couple of fields $(\boldsymbol{E}, \boldsymbol{H})$ *with the regularity* (7.29), *which solves the second-order system of equations* (7.6)–(7.7) *and the divergence conditions* (7.3)–(7.4), (7.5) *and* (7.8)–(7.9), *supplemented with boundary conditions* (5.8) *and* (5.9).
3. *Assume, in addition to 1 and 2, that* (7.30) *holds. Then, the fields* $(\boldsymbol{E}, \boldsymbol{H})$ *fulfill the boundary condition* (7.10).

In all instances, the quadruple $((\boldsymbol{E}, P_E), (\boldsymbol{H}, P_H))$ *depends continuously on the data.*

Remark 7.4.6 *Since $\boldsymbol{H}_1 = \mathbb{\mu}^{-1}\,\mathbf{curl}\,\boldsymbol{E}_0$, the compatibility conditions* $\operatorname{div} \mathbb{\mu}\boldsymbol{H}_1 = 0$, $\mathbb{\mu}\boldsymbol{H}_1 \cdot \boldsymbol{n}_{|\Gamma} = 0$ *are automatically satisfied by Proposition 2.2.10. Whereas, since $\boldsymbol{E}_1 := \mathbb{e}^{-1}(\mathbf{curl}\,\boldsymbol{H}_0 - \boldsymbol{J}(0))$, the compatibility condition* $\operatorname{div} \mathbb{e}\boldsymbol{E}_1 = \varrho'(0)$ *follows from* (7.49).

In case 2, the charge conservation equation and the condition $\boldsymbol{J} \in H^1(0,T;\boldsymbol{L}^2(\Omega))$, as in (7.27), *imply $\varrho \in H^2(0,T;H^{-1}(\Omega))$ and $\varrho'(0) + \operatorname{div} \boldsymbol{J}(0) = 0$.*

Mixed augmented formulation

It is possible to combine the previous two ideas. Using the notation of §7.4.1, and setting $P_E = 0$ and $P_H = 0$ again, we see that the couples $(\boldsymbol{E}, P_E)$ and $(\boldsymbol{H}, P_H)$ appear to be solutions to the mixed time-dependent systems:

$$
\begin{aligned}
&\forall \boldsymbol{w} \in \boldsymbol{X}_{N,-s}(\Omega;\mathbb{e}),\\
&\frac{d^2}{dt^2}\left\{(\mathbb{e}\boldsymbol{E}(t)|\boldsymbol{w})\right\} + \tilde{a}_E(\boldsymbol{E}(t),\boldsymbol{w}) + \overline{\langle P_E(t) \mid \operatorname{div}\mathbb{e}\boldsymbol{w}\rangle_{H^{-s}(\Omega)}}\\
&\qquad = -\frac{d}{dt}\left\{(\boldsymbol{J}(t)|\boldsymbol{w})\right\} + (\varrho(t), \operatorname{div}\mathbb{e}\boldsymbol{w})_{H^{-s}(\Omega)} \text{ in } \mathcal{D}'(]0,T[).\\
&\forall q \in H_0^s(\Omega), \qquad \langle \operatorname{div}\mathbb{e}\boldsymbol{E}(t), q\rangle_{H_0^s(\Omega)} = \langle \varrho(t), q\rangle_{H_0^s(\Omega)} \text{ in } \mathcal{D}'(]0,T[)\ ,
\end{aligned}
\tag{7.50}
$$

provided $\varrho \in C^0([0,T];H^{-s}(\Omega))$, and

$$
\begin{aligned}
&\forall \boldsymbol{w} \in \boldsymbol{X}_T(\Omega;\mathbb{p}),\\
&\frac{d^2}{dt^2}\left\{(\mathbb{p}\boldsymbol{H}(t)|\boldsymbol{w})\right\} + \tilde{a}_H(\boldsymbol{H}(t),\boldsymbol{w}) + \overline{(P_H(t) \mid \operatorname{div}\mathbb{p}\boldsymbol{w})}\\
&\qquad\qquad = (\mathbb{e}^{-1}\boldsymbol{J}(t)|\,\mathbf{curl}\,\boldsymbol{w}) \text{ in } \mathcal{D}'(]0,T[).\\
&\forall q \in L^2_{zmv}(\Omega), \qquad (\operatorname{div}\mathbb{p}\boldsymbol{H}(t) \mid q) = 0 \text{ in } \mathcal{D}'(]0,T[).
\end{aligned}
\tag{7.51}
$$

In other words, the divergence constraints are now enforced as follows. We set $\tilde{\mathcal{Q}}_H = L^2_{zmv}(\Omega)$ and define the sesquilinear form

$$
\tilde{b}_H(\boldsymbol{v},q) := (\operatorname{div}\mathbb{p}\boldsymbol{v} \mid q) \quad \text{for} \quad (\boldsymbol{v},q) \in \tilde{\mathcal{V}}_H \times \tilde{\mathcal{Q}}_H.
$$

The operator $\tilde{\mathtt{B}}_H^\dagger : L^2_{zmv}(\Omega) \to \boldsymbol{X}_T(\Omega;\mathbb{p})'$ again satisfies $\tilde{\mathtt{B}}_H^\dagger q = -\mathbb{p}\,\mathbf{grad}\,q$ in the sense of distributions. Using the integration-by-parts formula (2.25), we see that

$$
\tilde{\mathcal{Q}}_{H,w} = \left\{q \in \tilde{\mathcal{Q}}_H : \tilde{\mathtt{B}}_H^\dagger q \in \mathcal{H}_H\right\} = H^1_{zmv}(\Omega) \quad \text{and} \quad \tilde{b}_{H,w} = b_H,
$$

the same form that appears in the mixed unaugmented formulation. Similarly, for the electric field, we define $\tilde{\mathcal{Q}}_E = H_0^s(\Omega)$ and

$$
\tilde{b}_E(\boldsymbol{v},q) := \langle \operatorname{div}\mathbb{e}\boldsymbol{v}, q\rangle_{H_0^s(\Omega)} \quad \text{for} \quad (\boldsymbol{v},q) \in \tilde{\mathcal{V}}_E \times \tilde{\mathcal{Q}}_E.
$$

Using the integration-by-parts formula (2.26), we see that

$$
\tilde{\mathcal{Q}}_{E,w} = \left\{q \in \tilde{\mathcal{Q}}_E : \tilde{\mathtt{B}}_E^\dagger q \in \mathcal{H}_E\right\} = H^1_0(\Omega) \quad \text{and} \quad \tilde{b}_{E,w} = b_E\,;
$$

again, this is the same form as in the mixed unaugmented formulation.

To derive the well-posedness of the mixed problems (7.50) and (7.51), one has to prove that the new sesquilinear forms $\tilde{b}_E$, $\tilde{b}_H$ satisfy an inf-sup condition, and their kernels a double orthogonality property.

Proposition 7.4.7 *For each of the two subscripts $X = E,\ H$, there exists $\beta_X > 0$ such that*

$$
\inf_{q\in\tilde{\mathcal{Q}}_X} \sup_{\boldsymbol{v}\in\tilde{\mathcal{V}}_X} \frac{\tilde{b}_X(\boldsymbol{v},q)}{\|\boldsymbol{v}\|_{\tilde{\mathcal{V}}_X}\,\|q\|_{\tilde{\mathcal{Q}}_X}} \geq \beta_X. \tag{7.52}
$$

Proof. We examine the case of the electric field ($X = E$); the magnetic case ($X = H$) is similar. Let $q \in H_0^s(\Omega)$, and associate it with the element $q^\flat \in H^{-s}(\Omega)$ such that

$$\langle q^\flat, q' \rangle_{H_0^s(\Omega)} = (q, q')_{H_0^s(\Omega)}, \quad \forall q' \in H_0^s(\Omega).$$

The isomorphism $^\flat$ is the inverse of $^\sharp$ introduced in footnote [5], p. 274. Obviously, $\|q^\flat\|_{-s} = \|q\|_s$. Then, we introduce the unique solution $\xi \in H_0^1(\Omega)$ to the elliptic problem:

$$(\mathbb{c}\,\mathbf{grad}\,\xi \mid \mathbf{grad}\,\psi) = -(q, \psi)_{H_0^s(\Omega)}, \quad \forall \psi \in H_0^1(\Omega),$$

which is well-posed thanks to (5.10), the Poincaré inequality (Corollary 2.1.36) and the Lax–Milgram Theorem 4.2.8. In other words, $\operatorname{div}(\mathbb{c}\,\mathbf{grad}\,\xi) = q^\flat$, and $|\xi|_{H^1(\Omega)} \le C_0 \, \|q\|_{H_0^s(\Omega)}$.

Next, let $\boldsymbol{v} = \mathbf{grad}\,\xi$. We have $\boldsymbol{v} \in \boldsymbol{H}_0(\mathbf{curl}, \Omega)$ by Proposition 2.2.10. Moreover, $\operatorname{div} \mathbb{c}\boldsymbol{v} = q^\flat$; so, $\boldsymbol{v} \in \boldsymbol{X}_{N,-s}(\Omega; \mathbb{c})$ and

$$\begin{aligned}
&\|\boldsymbol{v}\|^2_{\tilde{\mathcal{V}}_E} = \|\,\mathbf{grad}\,\xi\|^2_{\boldsymbol{L}^2(\Omega)} + \|q^\flat\|^2_{H^{-s}(\Omega)} \le (C_0^2 + 1)\,\|q\|^2_{H_0^s(\Omega)}, \quad \text{and:}\\
&\langle \operatorname{div} \mathbb{c}\boldsymbol{v}, q \rangle_{H_0^s(\Omega)} = \langle q^\flat, q \rangle_{H_0^s(\Omega)} = \|q\|^2_{H_0^s(\Omega)} \ge \beta_E \|\boldsymbol{v}\|_{\tilde{\mathcal{V}}_E} \|q\|_{H_0^s(\Omega)},
\end{aligned}$$

with $\beta_E = (C_0^2 + 1)^{-1/2}$. This is (7.52). ■

The kernels of the forms $\tilde{b}_E$, $\tilde{b}_H$ are, once again, $\mathcal{K}_E = \boldsymbol{K}_N(\Omega; \mathbb{c})$, $\mathcal{K}_H = \boldsymbol{K}_T(\Omega; \mathbb{\mu})$. Applying Propositions 7.4.3 and 7.4.4 to the elements of the spaces $\boldsymbol{X}_{N,-s}(\Omega; \mathbb{c})$ and $\boldsymbol{X}_T(\Omega; \mathbb{\mu})$, one easily establishes the following doubly orthogonal decompositions.

Proposition 7.4.8 *Let Ω be a domain, and let the tensor fields $\mathbb{c}$ and $\mathbb{\mu}$ satisfy* (5.10). *Introduce the spaces of potentials*

$$\begin{aligned}
\Phi_{N,-s}(\Omega; \mathbb{c}) &:= \left\{ \varphi \in H_0^1(\Omega) : \mathbf{grad}\,\varphi \in \boldsymbol{X}_{N,-s}(\Omega; \mathbb{c}) \right\}\\
&= \left\{ \varphi \in H_0^1(\Omega) : \operatorname{div}(\mathbb{c}\,\mathbf{grad}\,\varphi) \in H^{-s}(\Omega) \right\}\ ;\\
\Phi_T(\Omega; \mathbb{\mu}) &:= \left\{ \varphi \in H^1_{zmv}(\Omega) : \mathbf{grad}\,\varphi \in \boldsymbol{X}_T(\Omega; \mathbb{\mu}) \right\}\\
&= \left\{ \varphi \in H^1_{zmv}(\Omega) : \operatorname{div}(\mathbb{\mu}\,\mathbf{grad}\,\varphi) \in L^2_{zmv}(\Omega) \ \textit{and}\ \mathbb{\mu}\,\mathbf{grad}\,\varphi \cdot \boldsymbol{n}_{|\Gamma} = 0 \right\}.
\end{aligned}$$

The following decompositions of the spaces $\boldsymbol{X}_{N,-s}(\Omega; \mathbb{c})$ and $\boldsymbol{X}_T(\Omega; \mathbb{\mu})$ hold:

$$\boldsymbol{X}_{N,-s}(\Omega; \mathbb{c}) = \mathbf{grad}\,\Phi_{N,-s}(\Omega; \mathbb{c}) \overset{\perp}{\oplus} \boldsymbol{K}_N(\Omega; \mathbb{c}),$$

with orthogonality in the sense of the scalar product ${}_2(\cdot,\cdot)_{\mathcal{H}_E} = (\mathbb{c}\cdot \mid \cdot)$, and *of the sesquilinear form* $\tilde{a}_E(\cdot,\cdot) = (\mathbb{\mu}^{-1}\,\mathbf{curl}\,\cdot \mid \mathbf{curl}\,\cdot) + (\operatorname{div} \mathbb{c}\cdot, \operatorname{div} \mathbb{c}\cdot)_{H^{-s}(\Omega)}$;

$$\boldsymbol{X}_T(\Omega; \mathbb{\mu}) = \mathbf{grad}\,\Phi_T(\Omega; \mathbb{\mu}) \overset{\perp}{\oplus} \boldsymbol{K}_T(\Omega; \mathbb{\mu}),$$

with orthogonality in the sense of the scalar product ${}_2(\cdot,\cdot)_{\mathcal{H}_H} = (\mathbb{\mu}\cdot \mid \cdot)$ and *of the sesquilinear form* $\tilde{a}_H(\cdot,\cdot) = (\mathbb{c}^{-1}\,\mathbf{curl}\,\cdot \mid \mathbf{curl}\,\cdot) + (\operatorname{div} \mathbb{\mu}\cdot \mid \operatorname{div} \mathbb{\mu}\cdot)$.

Combining the ideas used in the augmented and mixed unaugmented formulations, one proves the analogue of Theorems 7.4.2 and 7.4.5. Again for brevity, we handle both cases $s = 0$ (cf. (7.39)) and $s \neq 0$ (cf. (7.40)) at once.

Theorem 7.4.9 *Consider a perfect medium in a domain $\Omega \subset \mathbb{R}^3$ encased in a perfect conductor, and an existence time $T > 0$. Let the tensor fields $\mathbb{e}$ and $\mathbb{\mu}$ satisfy* (5.10).

1. *Assume* (7.42) *with*

$$\begin{cases} \operatorname{div} \mathbb{e}\boldsymbol{E}_0 = \varrho(0), \quad \varrho'(0) + \operatorname{div} \boldsymbol{J}(0) = 0\,; \\ \operatorname{div} \mathbb{\mu}\boldsymbol{H}_0 = 0, \quad \mathbb{\mu}\boldsymbol{H}_0 \cdot \boldsymbol{n}_{|\Gamma} = 0\,; \end{cases}$$

   plus either one *of the following regularity assumptions:*

$$\varrho \in L^2(0,T;H_0^1(\Omega)) \cap C^0([0,T];L^2(\Omega)) \cap H^2(0,T;H^{-1}(\Omega)) \tag{7.53}$$

$$\textit{or} \quad \varrho \in H^1(0,T;H^{-s}(\Omega)) \cap H^2(0,T;H^{-1}(\Omega)). \tag{7.54}$$

   Then, there exists one, and only one, quadruple of fields and multipliers $((\boldsymbol{E}, P_E), (\boldsymbol{H}, P_H))$, with the regularity (7.43) *and*

$$P_E \in L^2(0,T;H_0^s(\Omega)), \quad P_H \in L^2(0,T;L^2_{zmv}(\Omega)),$$

   which solves the variational formulations (7.50) *and* (7.51).
2. *Assume, in addition to 1, that the charge conservation equation*

$$\frac{\partial \varrho}{\partial t} + \operatorname{div} \boldsymbol{J} = 0 \quad \textit{holds for} \quad t \geq 0.$$

   Then, $P_E = P_H = 0$, and there exists one, and only one, couple of fields $(\boldsymbol{E}, \boldsymbol{H})$ with the regularity (7.44)*, which solves the second-order system of equations* (7.6)–(7.7) *and the divergence conditions* (7.3)–(7.4), (7.5) *and* (7.8)–(7.9)*, supplemented with boundary conditions* (5.8) *and* (5.9).
3. *Assume, in addition to 1 and 2, that* (7.30) *holds. Then, the fields $(\boldsymbol{E}, \boldsymbol{H})$ fulfill the boundary condition* (7.10).

In all instances, the quadruple $((\boldsymbol{E}, P_E), (\boldsymbol{H}, P_H))$ depends continuously on the data.

Remark 7.4.10 *The conditions* (7.53) *and* (7.54) *are obtained by combining, respectively,* (7.39) *and* (7.40) *with the condition $\varrho \in C^0([0,T];\tilde{\mathcal{Q}}'_E) \cap H^2(0,T;\tilde{\mathcal{Q}}'_{E,w})$ needed for the well-posedness of the abstract mixed problem (Remark 4.3.23). The last part of these conditions is automatically true in case 2 (see Remark 7.4.6).*

7.5 Compact imbeddings

In this section, we establish the compact imbeddings of the spaces $\boldsymbol{X}_{N,-s}(\Omega;\mathbb{e})$, respectively $\boldsymbol{X}_T(\Omega;\mathbb{\mu})$ in $\boldsymbol{L}^2(\Omega)$, under the condition that $\mathbb{e}$, respectively $\mathbb{\mu}$,

is a tensor field that fulfills assumption (5.10). These results will be of use in §7.6, to study the "improved" regularity of the solution to Maxwell's equations when the data $(\varrho, \boldsymbol{J})$ are more regular in space and time; and also in §8, when we investigate time-harmonic eigenvalue and Helmholtz-like problems. When the tensors $\mathbb{c}$ and $\mathbb{p}$ are constant and proportional to $\mathbb{I}_3$, such results have already been obtained, namely the compact imbedding of $\boldsymbol{X}_N(\Omega)$, respectively of $\boldsymbol{X}_T(\Omega)$ in $\boldsymbol{L}^2(\Omega)$ (see Theorems 3.4.4 and 3.5.4).

Let us start with the generalization of Theorem 3.4.4.

Theorem 7.5.1 *Let Ω be a domain, and let $\mathbb{c}$ be a tensor field that fulfills assumption (5.10). Given $s \in [0, 1[$, one has $\boldsymbol{X}_{N,-s}(\Omega; \mathbb{c}) \subset_c \boldsymbol{L}^2(\Omega)$.*

Remark 7.5.2 *One can prove that $\boldsymbol{X}_{N,-1}(\Omega; \mathbb{c}) = \boldsymbol{H}_0(\mathbf{curl}, \Omega)$ is not compactly imbedded in $\boldsymbol{L}^2(\Omega)$ as follows. One chooses a bounded sequence of elements of $H^1_0(\Omega)$ with no converging subsequence, which is possible since its unit ball is not compact ($H^1_0(\Omega)$ is an infinite-dimensional vector space). Then, taking their gradients yields a bounded sequence of curl-free elements of $\boldsymbol{H}_0(\mathbf{curl}, \Omega)$, and one can easily check by contradiction that this sequence has no converging subsequence in $\boldsymbol{L}^2(\Omega)$.*

Proof. Consider $(\boldsymbol{y}_m)_m$ a bounded sequence of $\boldsymbol{X}_{N,-s}(\Omega; \mathbb{c})$. Similarly to the proof of Theorem 3.4.3, we split, for all m, the field $\boldsymbol{y}_m$ into three parts.
1. Let $q^0_m \in H^1_0(\Omega)$ be the unique solution to

$$\begin{cases} \textit{Find } q^0_m \in H^1_0(\Omega) \textit{ such that} \\ \forall q \in H^1_0(\Omega),\ (\mathbb{c}\,\mathbf{grad}\, q^0_m | \,\mathbf{grad}\, q) = (\mathbb{c}\boldsymbol{y}_m | \,\mathbf{grad}\, q). \end{cases}$$

Because $(\operatorname{div} \mathbb{c}\boldsymbol{y}_m)_m$ is bounded in $H^{-s}(\Omega)$, it is also bounded in $H^{-1}(\Omega)$ (cf. (2.6)). So, using $q = q^0_m$ in the above formulation yields

$$\|\mathbb{c}^{1/2}\,\mathbf{grad}\, q^0_m\|^2 = -\langle \operatorname{div} \mathbb{c}\boldsymbol{y}_m, q^0_m\rangle_{H^1_0(\Omega)} \leq \|\operatorname{div} \mathbb{c}\boldsymbol{y}_m\|_{H^{-1}(\Omega)}\, \|q^0_m\|_{H^1(\Omega)}\,,$$

and with the help of the Poincaré inequality in $H^1_0(\Omega)$, we find that $(q^0_m)_m$ is bounded in $H^1_0(\Omega)$. Hence, because $H^1(\Omega) \subset_c H^s(\Omega)$ (notice that $s < 1$ and apply Proposition 2.1.43), there exists a subsequence, still denoted by $(q^0_m)_m$, that converges in $H^s(\Omega)$. In addition, one has $q^0_m \in H^s_0(\Omega)$ for all m. Denoting $\boldsymbol{y}_{mn} := \boldsymbol{y}_m - \boldsymbol{y}_n$, $q^0_{mn} := q^0_m - q^0_n$, it follows that

$$\begin{aligned} \|\mathbb{c}^{1/2}\,\mathbf{grad}\, q^0_{mn}\|^2 &= -\langle \operatorname{div} \mathbb{c}\boldsymbol{y}_{mn}, q^0_{mn}\rangle_{H^s_0(\Omega)} \leq \|\operatorname{div} \mathbb{c}\boldsymbol{y}_{mn}\|_{H^{-s}(\Omega)}\, \|q^0_{mn}\|_{H^s(\Omega)} \\ &\leq 2 \sup_m (\|\operatorname{div} \mathbb{c}\boldsymbol{y}_m\|_{H^{-s}(\Omega)})\, \|q^0_{mn}\|_{H^s(\Omega)}. \end{aligned}$$

So, $(\mathbf{grad}\, q^0_m)_m$ is a Cauchy sequence in $\boldsymbol{L}^2(\Omega)$, and it converges in this space.
2. Let $\boldsymbol{z}^\varepsilon_m := P_{\boldsymbol{Z}^\varepsilon_N} \boldsymbol{y}_m \in \boldsymbol{Z}_N(\Omega; \mathbb{c})$: $(\boldsymbol{z}^\varepsilon_m)_m$ is bounded in the finite-dimensional vector space $\boldsymbol{Z}_N(\Omega; \mathbb{c})$, so there exists a subsequence, still denoted by $(\boldsymbol{z}^\varepsilon_m)_m$, that converges in $\boldsymbol{Z}_N(\Omega; \mathbb{c})$, and hence in $\boldsymbol{L}^2(\Omega)$.
3. Let $\boldsymbol{x}_m := \boldsymbol{y}_m - \mathbf{grad}\, q^0_m - \boldsymbol{z}^\varepsilon_m$. By construction, the sequence $(\boldsymbol{x}_m)_m$ is

bounded in $\boldsymbol{L}^2(\Omega)$. In addition, for all m, $\operatorname{div} \mathbb{e}\boldsymbol{x}_m = 0$, $\mathbf{curl}\, \boldsymbol{x}_m = \mathbf{curl}\, \boldsymbol{y}_m$ in Ω, and $\langle \mathbb{e}\boldsymbol{x}_m \cdot \boldsymbol{n}, 1\rangle_{H^{1/2}(\Gamma_k)} = 0$ for all k. Using Theorem 3.4.1 for every m, there exists a sequence $(\boldsymbol{w}_m)_m$ of elements of $\boldsymbol{H}^1_{zmv}(\Omega)$ such that $\mathbb{e}\boldsymbol{x}_m = \mathbf{curl}\, \boldsymbol{w}_m$ in Ω, which is bounded in $\boldsymbol{H}^1(\Omega)$. Hence, there exists a subsequence, still denoted by $(\boldsymbol{w}_m)_m$, that converges in $\boldsymbol{L}^2(\Omega)$. Defining the subsequence $(\boldsymbol{x}_m)_m$ with the same indices and denoting $\boldsymbol{x}_{mn} := \boldsymbol{x}_m - \boldsymbol{x}_n$ and $\boldsymbol{w}_{mn} := \boldsymbol{w}_m - \boldsymbol{w}_n$, one finds, by integration by parts,

$$\begin{aligned}\|\mathbb{e}^{1/2}\boldsymbol{x}_{mn}\|^2 &= (\boldsymbol{x}_{mn}|\, \mathbf{curl}\, \boldsymbol{w}_{mn}) = (\mathbf{curl}\, \boldsymbol{x}_{mn}|\boldsymbol{w}_{mn}) \\ &= (\mathbf{curl}\, \boldsymbol{y}_{mn}|\boldsymbol{w}_{mn}) \le 2 \sup_m (\|\, \mathbf{curl}\, \boldsymbol{y}_m\|)\, \|\boldsymbol{w}_{mn}\|.\end{aligned}$$

So, $(\boldsymbol{x}_m)_m$ is a Cauchy sequence in $\boldsymbol{L}^2(\Omega)$, and it converges in this space. By construction, one has $\boldsymbol{y}_m := \boldsymbol{x}_m - \mathbf{grad}\, q^0_m - \boldsymbol{z}^\varepsilon_m$, so the subsequence $(\boldsymbol{y}_m)_m$ converges in $\boldsymbol{L}^2(\Omega)$. ■

Let us continue with the generalization of Theorem 3.5.4.

Theorem 7.5.3 *Let Ω be a domain such that* $\mathbf{(Top)}_{I=0}$ *or* $\mathbf{(Top)}_{I>0}$ *is fulfilled, and let $\mathbb{p}$ be a tensor field that fulfills assumption (5.10). It holds that $\boldsymbol{X}_T(\Omega;\mathbb{p}) \subset_c \boldsymbol{L}^2(\Omega)$.*

Proof. Let $(\boldsymbol{y}_m)_m$ be a bounded sequence of $\boldsymbol{X}_T(\Omega;\mathbb{p})$. Similarly to the proof of Theorem 3.5.3, we split, for all m, the field $\boldsymbol{y}_m$ into three parts.
1. Let $q^0_m \in H^1_{zmv}(\Omega)$ be the unique solution to

$$\begin{cases} \textit{Find } q^0_m \in H^1_{zmv}(\Omega) \textit{ such that} \\ \forall q \in H^1_{zmv}(\Omega),\ (\mathbb{p}\, \mathbf{grad}\, q^0_m|\, \mathbf{grad}\, q) = (\mathbb{p}\boldsymbol{y}_m|\, \mathbf{grad}\, q). \end{cases}$$

Taking $q = q^0_m$ above, one finds, by integration by parts and through successive use of the Cauchy-Schwarz and the Poincaré–Wirtinger inequalities, that

$$\|\mathbb{p}^{1/2}\, \mathbf{grad}\, q^0_m\| \le C\, \|\operatorname{div} \mathbb{p}\boldsymbol{y}_m\|,$$

with $C > 0$ independent of $\boldsymbol{y}_m$. So, $(q^0_m)_m$ is bounded in $H^1_{zmv}(\Omega)$, and there exists a subsequence, still denoted by $(q^0_m)_m$, that converges in $L^2(\Omega)$. Denoting $\boldsymbol{y}_{mn} := \boldsymbol{y}_m - \boldsymbol{y}_n$, $q^0_{mn} := q^0_m - q^0_n$, it follows, once more by integration by parts, that

$$\|\mathbb{p}^{1/2}\, \mathbf{grad}\, q^0_{mn}\|^2 \le 2 \sup_m (\|\operatorname{div} \mathbb{p}\boldsymbol{y}_m\|)\, \|q^0_{mn}\|,$$

and as a consequence, $(\mathbf{grad}\, q^0_m)_m$ converges in $\boldsymbol{L}^2(\Omega)$.
2. Let $\boldsymbol{z}^\mu_m := P_{\boldsymbol{Z}^\mu_T} \boldsymbol{y}_m \in \boldsymbol{Z}_T(\Omega;\mathbb{p})$: $(\boldsymbol{z}^\mu_m)_m$ is bounded in $\boldsymbol{Z}_T(\Omega;\mathbb{p})$, which is finite-dimensional, so there exists a subsequence, still denoted by $(\boldsymbol{z}^\mu_m)_m$, that converges in $\boldsymbol{Z}_T(\Omega;\mathbb{p})$, and hence in $\boldsymbol{L}^2(\Omega)$.
3. Let $\boldsymbol{x}_m := \boldsymbol{y}_m - \mathbf{grad}\, q^0_m - \boldsymbol{z}^\mu_m$: the sequence $(\boldsymbol{x}_m)_m$ is bounded in $\boldsymbol{L}^2(\Omega)$. By construction, $\operatorname{div} \mathbb{p}\boldsymbol{x}_m = 0$ and $\mathbf{curl}\, \boldsymbol{x}_m = \mathbf{curl}\, \boldsymbol{y}_m$ in Ω, while $\mathbb{p}\boldsymbol{x}_m \cdot \boldsymbol{n}_{|\Gamma} = 0$

and $\langle \mu \boldsymbol{x}_m \cdot \boldsymbol{n}, 1 \rangle_{\Sigma_i} = 0$ for all i. With the help of Theorem 3.5.1, for every m, there exists a bounded sequence $(\boldsymbol{w}_m)_m$ of elements of $\boldsymbol{X}_N(\Omega)$ such that $\mu \boldsymbol{x}_m = \mathbf{curl}\, \boldsymbol{w}_m$ in Ω. Using Theorem 3.4.4, one infers that there exists a subsequence, still denoted by $(\boldsymbol{w}_m)_m$, that converges in $\boldsymbol{L}^2(\Omega)$. Defining the subsequence $(\boldsymbol{x}_m)_m$ with the same indices and denoting $\boldsymbol{x}_{mn} := \boldsymbol{x}_m - \boldsymbol{x}_n$ and $\boldsymbol{w}_{mn} := \boldsymbol{w}_m - \boldsymbol{w}_n$, one finds, by integration by parts,

$$\|\mu^{1/2} \boldsymbol{x}_{mn}\|^2 \leq 2 \sup_m (\| \mathbf{curl}\, \boldsymbol{y}_m \|)\, \|\boldsymbol{w}_{mn}\|.$$

So, $(\boldsymbol{x}_m)_m$ is a Cauchy sequence in $\boldsymbol{L}^2(\Omega)$, and it converges in this space. It holds that $\boldsymbol{y}_m := \boldsymbol{x}_m - \mathbf{grad}\, q_m^0 - \boldsymbol{z}_m^\mu$ for all m, so the subsequence $(\boldsymbol{y}_m)_m$ converges in $\boldsymbol{L}^2(\Omega)$. ■

Remark 7.5.4 *We can further generalize this last result. Actually, given $s \in]0, 1/2[$, one can prove that the function space*

$$\boldsymbol{X}_{T,-s}(\Omega; \mu) := \{\boldsymbol{f} \in \boldsymbol{H}(\mathbf{curl}, \Omega) \ : \ \mu \boldsymbol{f} \in \boldsymbol{H}_{-s}(\mathrm{div}, \Omega), \ \mu \boldsymbol{f} \cdot \boldsymbol{n}_{|\Gamma} = 0\}$$

is compactly imbedded in $\boldsymbol{L}^2(\Omega)$ by using the same proof as above. Indeed, according to Theorem 2.2.22, given $\boldsymbol{y}$ such that $\mu \boldsymbol{y} \in \boldsymbol{H}_{-s}(\mathrm{div}, \Omega)$, on the one hand, $\mu \boldsymbol{y} \cdot \boldsymbol{n}_{|\Gamma}$ has a meaning in $H^{-1/2}(\Gamma)$, so the function space $\boldsymbol{X}_{T,-s}(\Omega; \mu)$ is well-defined. On the other hand, the integration-by-parts formula (2.26) *allows one to check that the scalar fields $q_m^0 \in H^1_{zmv}(\Omega)$ of item 1 yield a bounded sequence (in $H^1_{zmv}(\Omega)$) via the inequality*

$$\|\mu^{1/2}\, \mathbf{grad}\, q_m^0\|^2 = -\langle \mathrm{div}\, \mu \boldsymbol{y}_m, q_m^0 \rangle_{H_0^s(\Omega)} \leq \| \mathrm{div}\, \mu \boldsymbol{y}_m \|_{H^{-s}(\Omega)} \|q_m^0\|_{H^s(\Omega)}\,.$$

Furthermore, extraction of a converging subsequence in $H^s(\Omega)$ follows from Proposition 2.1.43. The rest of the proof is unchanged.

7.6 Improved regularity for augmented and mixed augmented formulations

We show how the augmented and/or mixed formulations of §7.4 can be used to derive improved space-time regularity results for the electromagnetic fields. In this section, we shall make two crucial assumptions so as to apply the improved regularity theory of §4.4. First, the domain Ω is encased in a perfect conductor: because of the first-order terms in (7.22) and (7.24), the truncated interior problem does not have the form of a wave equation, and our theory is not directly applicable to it. Second, the topology of Ω is such that the augmented form $\tilde{a}_X$ is coercive on the whole space $\tilde{\mathcal{V}}_X$ for $X = E$ or H. Summarising the results of §§6.1 and 6.2, a sufficient (and necessary, under the general $\mathbf{(Top)}_{I \geq 0}$ assumption) condition for this is:

- in the electric case ($X = E$), the assumption $\mathbf{(Top)}_{I \geq 0}$ holds and the boundary $\Gamma = \partial\Omega$ is connected;

- in the magnetic case ($X = H$), the domain is topologically trivial, i.e., $\mathbf{(Top)}_{I=0}$ holds.

At the end of this section, we will show that our results still hold in a more general case, when the topological hypothesis is removed.

Furthermore, we know from Theorems 7.5.1 and 7.5.3 that the spaces $\mathcal{V}_E = \boldsymbol{X}_{N,-s}(\Omega;\mathbb{e})$ and $\mathcal{V}_H = \boldsymbol{X}_T(\Omega;\mathbb{\mu})$ are compactly embedded into $\boldsymbol{L}^2(\Omega)$. Thus, all the general assumptions of §4.4 are satisfied: one can apply the space-time regularity results of that section in the scales $\left(\tilde{\mathcal{V}}_X^s\right)_{s\in\mathbb{R}}$ of $\mathtt{A}$-Sobolev spaces built upon $\tilde{\mathcal{V}}_X$, for $X = E,\ H$. The regularity of the data has to be defined in these scales, as well as the scales $\left(\tilde{\mathcal{Q}}_X^s\right)_{s\in\mathbb{R}}$ and $\left(\tilde{\mathcal{F}}_X^s\right)_{s\in\mathbb{R}}$ related to the sesquilinear forms $\tilde{b}_X$. In Table 7.1, we recall and collect the characterisations of the most useful spaces.

Table 7.1. Notations for mixed formulations in electromagnetism.

Spaces	$\tilde{\mathcal{Q}}$	$\tilde{\mathcal{Q}}_w$	$\tilde{\mathcal{Q}}_{ww}$	$\tilde{\mathcal{F}}^0$	$\tilde{\mathcal{F}}^{-2}$	$D(\mathtt{A})$
Electric	$L^2(\Omega)$	$H_0^1(\Omega)$	$\Phi_{N,-s}(\Omega;\mathbb{e})$	$H_0^1(\Omega)$	$H^{-1}(\Omega)$	see below
Magnetic	$L^2_{zmv}(\Omega)$	$H^1_{zmv}(\Omega)$	$\Phi_T(\Omega;\mathbb{\mu})$	$H^1_{zmv}(\Omega)$	$H^1(\Omega)'_{zmv}$	see below

As a first example, we first derive an alternative proof of the well-posedness of the magnetic field equations, as announced in Remark 7.2.7. The right-hand side of (7.37) and (7.51, top), namely $(\mathbb{e}^{-1}\boldsymbol{J}(t)|\,\mathbf{curl}\,\boldsymbol{w})$, can be rewritten as $\langle \boldsymbol{f}(t), \boldsymbol{w}\rangle_{\boldsymbol{X}_T(\Omega;\mathbb{\mu})}$; for any space E measuring time regularity, it holds that $\boldsymbol{f} \in E(0,T;\boldsymbol{X}_T(\Omega;\mathbb{\mu})')$ if $\boldsymbol{J} \in E(0,T;\boldsymbol{L}^2(\Omega))$. As $\boldsymbol{X}_T(\Omega;\mathbb{\mu})' = \tilde{\mathcal{V}}_H^{-1}$, applying the second item of Theorem 4.4.3 (with $s = 0$ there) gives us

> Let $\boldsymbol{J} \in W^{1,1}(0,T;\boldsymbol{L}^2(\Omega))$, $\boldsymbol{H}_0 \in \boldsymbol{X}_T(\Omega;\mathbb{\mu})$ and $\boldsymbol{H}_1 \in \boldsymbol{L}^2(\Omega)$. The problem (7.37), with the initial conditions $\boldsymbol{H}_0$ and $\boldsymbol{H}_1$, admits a unique solution such that $(\boldsymbol{H},\boldsymbol{H}') \in C^0([0,T];\boldsymbol{X}_T(\Omega;\mathbb{\mu})) \times C^0([0,T];\boldsymbol{H}_0(\operatorname{div}\mathbb{\mu},\Omega))$.

Another possible regularity assumption for $\boldsymbol{J}$ is $\mathbb{e}^{-1}\boldsymbol{J} \in L^p(0,T;\boldsymbol{H}_0(\mathbf{curl},\Omega))$ with $p \geq 1$; in this case, $\boldsymbol{f} = \mathbf{curl}(\mathbb{e}^{-1}\boldsymbol{J})$ in the usual sense, and it belongs to $L^p(0,T;\boldsymbol{L}^2(\Omega))$. As the r.h.s. of (7.51, bottom) is zero, the application of Theorem 4.4.8 similarly yields:

> Let $\boldsymbol{J}$ satisfy any one of the following regularity assumptions:
>
> $$\boldsymbol{J} \in W^{1,1}(0,T;\boldsymbol{L}^2(\Omega)), \quad \text{or}$$
> $$\mathbb{e}^{-1}\boldsymbol{J} \in L^p(0,T;\boldsymbol{H}_0(\mathbf{curl},\Omega))\,;$$

and let $\boldsymbol{H}_0 \in \boldsymbol{K}_T(\Omega;\mathbb{\mu})$ and $\boldsymbol{H}_1 \in \boldsymbol{H}_0(\mathrm{div},\mathbb{\mu}\Omega)$. The problem (7.51), with the initial conditions $\boldsymbol{H}_0$ and $\boldsymbol{H}_1$, admits a unique solution such that $(\boldsymbol{H},\boldsymbol{H}') \in C^0([0,T];\boldsymbol{K}_T(\Omega;\mathbb{\mu})) \times C^0([0,T];\boldsymbol{H}_0(\mathrm{div}\,\mathbb{\mu}0,\Omega))$.

In order to analyse numerical schemes that discretise the augmented and mixed augmented formulations, it is desirable to investigate the existence of solutions more regular in both time and space [82, 83]. Let $\mathtt{A}_X$ be the strong operator associated with the augmented sesquilinear form $\tilde{a}_X(\cdot,\cdot)$. Then, one has:

$$D(\mathtt{A}_X) = \left\{ \boldsymbol{u} \in \tilde{\mathcal{V}}_X : \exists \boldsymbol{g} \in \mathcal{H}_X,\ \tilde{a}_X(\boldsymbol{u},\boldsymbol{v}) = {}_2(\boldsymbol{g},\boldsymbol{v})_{\mathcal{H}_X},\ \forall \boldsymbol{v} \in \tilde{\mathcal{V}}_X \right\}.$$

Of course, the weighted scalar product ${}_2(\cdot,\cdot)_{\mathcal{H}_X}$ can be replaced with the standard $\boldsymbol{L}^2$ product in this characterisation. But the above choice will allow us to take the greatest advantage of the double orthogonality properties of Propositions 7.4.3, 7.4.4 and 7.4.8. The norm $\|\boldsymbol{u}\|_{D(\mathtt{A}_X)} := \|\boldsymbol{g}\|_{\mathcal{H}_X}$ is equivalent to the graph norm of $D(\mathtt{A}_X)$ (Proposition 4.4.2).

To proceed with the characterisation of the spaces $D(\mathtt{A}_X)$, let us use the isomorphism $^\sharp$ of footnote [5], p. 274. If $\boldsymbol{u} \in D(\mathtt{A}_E)$, respectively $D(\mathtt{A}_H)$, one formally has:

$$\mathtt{A}_E\boldsymbol{u} = \mathbb{\epsilon}\boldsymbol{g} = \mathbf{curl}\,\mathbb{\mu}^{-1}\,\mathbf{curl}\,\boldsymbol{u} - \mathbb{\epsilon}\,\mathbf{grad}(\mathrm{div}\,\mathbb{\epsilon}\boldsymbol{u})^\sharp, \tag{7.55}$$

$$\text{respectively}\quad \mathtt{A}_H\boldsymbol{u} = \mathbb{\mu}\boldsymbol{g} = \mathbf{curl}\,\mathbb{\epsilon}^{-1}\,\mathbf{curl}\,\boldsymbol{u} - \mathbb{\mu}\,\mathbf{grad}\,\mathrm{div}\,\mathbb{\mu}\boldsymbol{u}.$$

Proposition 7.6.1 *The space $D(\mathtt{A}_E)$ is algebraically and topologically equal to:*

$$\tilde{\boldsymbol{X}}_{N,-s}(\Omega;\mathbb{\epsilon}) = \Big\{ \boldsymbol{u} \in \boldsymbol{X}_{N,-s}(\Omega;\mathbb{\epsilon}) : \mathbb{\mu}^{-1}\,\mathbf{curl}\,\boldsymbol{u} \in \boldsymbol{H}(\mathbf{curl},\Omega) \\ \textit{and } (\mathrm{div}\,\mathbb{\epsilon}\boldsymbol{u})^\sharp \in H^1_0(\Omega) \Big\},$$

i.e., if $s = 0$:

$$\tilde{\boldsymbol{X}}_N(\Omega;\mathbb{\epsilon}) = \left\{ \boldsymbol{u} \in \boldsymbol{X}_N(\Omega;\mathbb{\epsilon}) : \mathbb{\mu}^{-1}\,\mathbf{curl}\,\boldsymbol{u} \in \boldsymbol{H}(\mathbf{curl},\Omega) \textit{ and } \mathrm{div}\,\mathbb{\epsilon}\boldsymbol{u} \in H^1_0(\Omega) \right\},$$

equipped with its canonical norm. Similarly, the space $D(\mathtt{A}_H)$ is algebraically and topologically equal to

$$\tilde{\boldsymbol{X}}_T(\Omega;\mathbb{\mu}) = \left\{ \boldsymbol{u} \in \boldsymbol{X}_T(\Omega;\mathbb{\mu}) : \mathbb{\epsilon}^{-1}\,\mathbf{curl}\,\boldsymbol{u} \in \boldsymbol{H}_0(\mathbf{curl},\Omega) \textit{ and } \mathrm{div}\,\mathbb{\mu}\boldsymbol{u} \in H^1(\Omega) \right\}.$$

Proof. We present the proof in the electric case; the magnetic case is exactly similar. Let $\boldsymbol{u} \in \tilde{\boldsymbol{X}}_{N,-s}(\Omega;\mathbb{\epsilon})$; the field $\boldsymbol{g}$ defined by (7.55) belongs to $\boldsymbol{L}^2(\Omega)$. Using the integration-by-parts formulas (2.20) and (2.21), one finds:

$$\begin{aligned} \tilde{a}_E(\boldsymbol{u},\boldsymbol{v}) &= (\mathbb{\mu}^{-1}\,\mathbf{curl}\,\boldsymbol{u} \mid \mathbf{curl}\,\boldsymbol{v}) + \langle (\mathrm{div}\,\mathbb{\epsilon}\boldsymbol{u})^\sharp, \mathrm{div}\,\mathbb{\epsilon}\boldsymbol{v} \rangle_{H^{-s}(\Omega)} \\ &= (\mathbb{\epsilon}\boldsymbol{g} \mid \boldsymbol{v}), \qquad \forall \boldsymbol{v} \in \boldsymbol{X}_{N,-s}(\Omega;\mathbb{\epsilon}). \end{aligned}$$

i.e., $\boldsymbol{u} \in D(\mathtt{A}_E)$ and

$$\|\boldsymbol{u}\|_{D(\mathtt{A}_E)} := \|\mathbb{\epsilon}^{1/2}\boldsymbol{g}\| \le C\,\|\boldsymbol{u}\|_{\tilde{\boldsymbol{X}}_{N,-s}(\Omega;\mathbb{\epsilon})}$$

for some constant C depending on Ω, $\mathbb{\epsilon}$, $\mathbb{\mu}$, s.

Conversely, let $\boldsymbol{u} \in D(\mathtt{A}_E)$ and $\boldsymbol{g} := \mathbb{e}^{-1}\mathtt{A}_E\boldsymbol{u} \in \boldsymbol{L}^2(\Omega)$. Using Propositions 7.4.3 and 7.4.8, we decompose them into longitudinal and transversal parts, which are orthogonal in $\boldsymbol{L}^2(\Omega)$ and (if applicable) in $\boldsymbol{X}_{N,-s}(\Omega;\mathbb{e})$:

$$\begin{aligned} \boldsymbol{u} &= \boldsymbol{u}_L + \boldsymbol{u}_T, \quad \boldsymbol{u}_L \in \mathbf{grad}[\Phi_{N,-s}(\Omega;\mathbb{e})], \quad \boldsymbol{u}_T \in \boldsymbol{K}_N(\Omega;\mathbb{e})\,; \\ \boldsymbol{g} &= \mathbf{grad}\,\phi_{\boldsymbol{g}} + \boldsymbol{g}_T, \quad \phi_{\boldsymbol{g}} \in H^1_0(\Omega), \quad \boldsymbol{g}_T \in \boldsymbol{H}(\operatorname{div}\mathbb{e}0,\Omega). \end{aligned}$$

By Lemma 4.4.5, we know that $\boldsymbol{u}_L$ and $\boldsymbol{u}_T$ both belong to $D(\mathtt{A}_E)$, and

$$\begin{aligned} &\forall \boldsymbol{v} \in \boldsymbol{X}_{N,-s}(\Omega;\mathbb{e}), \\ &\quad \tilde{a}_E(\boldsymbol{u}_T,\boldsymbol{v}) = (\mathbb{\mu}^{-1}\,\mathbf{curl}\,\boldsymbol{u}_T \mid \mathbf{curl}\,\boldsymbol{v}) = (\mathbb{e}\boldsymbol{g}_T \mid \boldsymbol{v})\,; \qquad (7.56) \\ &\quad \tilde{a}_E(\boldsymbol{u}_L,\boldsymbol{v}) = \langle (\operatorname{div}\mathbb{e}\boldsymbol{u}_L)^\sharp, \operatorname{div}\mathbb{e}\boldsymbol{v}\rangle_{H^{-s}(\Omega)} = (\mathbb{e}\,\mathbf{grad}\,\phi_{\boldsymbol{g}} \mid \boldsymbol{v}). \qquad (7.57) \end{aligned}$$

For any $\boldsymbol{v} \in \boldsymbol{H}_0(\mathbf{curl},\Omega)$, it holds that $\boldsymbol{v}_T \in \boldsymbol{X}_{N,-s}(\Omega;\mathbb{e})$. Thus, (7.56) yields, thanks to double orthogonality,

$$(\mathbb{\mu}^{-1}\,\mathbf{curl}\,\boldsymbol{u}_T \mid \mathbf{curl}\,\boldsymbol{v}) = (\mathbb{\mu}^{-1}\,\mathbf{curl}\,\boldsymbol{u}_T \mid \mathbf{curl}\,\boldsymbol{v}_T) = (\mathbb{e}\boldsymbol{g}_T \mid \boldsymbol{v}_T) = (\mathbb{e}\boldsymbol{g}_T \mid \boldsymbol{v}).$$

Invoking Proposition 2.2.5, this implies that $\mathbb{\mu}^{-1}\,\mathbf{curl}\,\boldsymbol{u} = \mathbb{\mu}^{-1}\,\mathbf{curl}\,\boldsymbol{u}_T \in \boldsymbol{H}(\mathbf{curl},\Omega)$. To handle (7.57), take any $f \in H^{-s}(\Omega)$, and introduce the unique solution $\xi \in H^1_0(\Omega)$ to the elliptic problem:

$$(\mathbb{e}\,\mathbf{grad}\,\xi \mid \mathbf{grad}\,\psi) = -\langle f,\psi\rangle_{H^s_0(\Omega)}\,, \quad \forall \psi \in H^1_0(\Omega),$$

(i.e., $\operatorname{div}\mathbb{e}\,\mathbf{grad}\,\xi = f$), and set $\boldsymbol{v} = \mathbf{grad}\,\xi \in \boldsymbol{X}_{N,-s}(\Omega;\mathbb{e})$. Then,

$$\langle (\operatorname{div}\mathbb{e}\boldsymbol{u}_L)^\sharp, \operatorname{div}\mathbb{e}\,\mathbf{grad}\,\xi\rangle_{H^{-s}(\Omega)} = (\mathbb{e}\,\mathbf{grad}\,\phi_{\boldsymbol{g}} \mid \mathbf{grad}\,\xi) = -\langle f,\phi_{\boldsymbol{g}}\rangle_{H^s_0(\Omega)}\,,$$

i.e., $\langle (\operatorname{div}\mathbb{e}\boldsymbol{u}_L)^\sharp, f\rangle_{H^{-s}(\Omega)} = -\overline{\langle \phi_{\boldsymbol{g}}, f\rangle_{H^{-s}(\Omega)}}$. As f is arbitrary, we deduce $(\operatorname{div}\mathbb{e}\boldsymbol{u}_L)^\sharp = -\overline{\phi_{\boldsymbol{g}}}$ in the sense of $H^s_0(\Omega)$, hence, $(\operatorname{div}\mathbb{e}\boldsymbol{u}_L)^\sharp \in H^1_0(\Omega)$, and finally, $\boldsymbol{u} \in \tilde{\boldsymbol{X}}_{N,-s}(\Omega;\mathbb{e})$. All in all, $D(\mathtt{A}_E) = \tilde{\boldsymbol{X}}_{N,-s}(\Omega;\mathbb{e})$, and the equivalence of norms follows from the open mapping Theorem 4.1.4. ■

As a final application of the theory developed in §4.4, we now give some conditions on the data that ensure that the solution is smoother in time, namely $\boldsymbol{E}$ or $\boldsymbol{H}$ belongs to $W^{2,p}(0,T;D(\mathtt{A}_X)) \cap W^{4,p}(0,T;\mathcal{H}_X)$. This space-time regularity may be used to derive optimal error bounds for some finite element methods.[6] To obtain it, it is sufficient to take $m = 2$, $s = 1$ in Theorems 4.4.4 and 4.4.8. In the case of electric field equations, we find...

Proposition 7.6.2 *In order to have* $\boldsymbol{E} \in W^{2,p}(0,T;\tilde{\boldsymbol{X}}_{N,-s}(\Omega;\mathbb{e})) \cap W^{4,p}(0,T;\boldsymbol{L}^2(\Omega))$ *and* $P_E \in W^{2,p}(0,T;H^1_0(\Omega))$ *if applicable, it is sufficient to assume:*

[6] See [82, 83, 19]. These conditions are actually more stringent than those originating in the approximation of the right-hand side.

- *in the non-mixed framework: either*

$$\boldsymbol{J} \in W^{4,1}(0,T;\boldsymbol{L}^2(\Omega)), \quad \varrho^\sharp \in W^{3,1}(0,T;H^1_0(\Omega)),$$

or

$$\boldsymbol{J} \in W^{3,p}(0,T;\boldsymbol{X}_{N,-s}(\Omega;\mathbb{e})), \quad \mathbb{e}\,\mathbf{grad}\,\varrho^\sharp \in W^{2,p}(0,T;\boldsymbol{X}_{N,-s}(\Omega;\mathbb{e})), \ (^7)$$

together with the higher-order initial data $(\boldsymbol{E}_2,\boldsymbol{E}_3) \in \tilde{\boldsymbol{X}}_{N,-s}(\Omega;\mathbb{e}) \times \boldsymbol{X}_{N,-s}(\Omega;\mathbb{e})$*, where*

$$\begin{aligned}\mathbb{e}\boldsymbol{E}_2 &= -\boldsymbol{J}'(0) - \mathbf{curl}\,\mathbb{\mu}^{-1}\,\mathbf{curl}\,\boldsymbol{E}_0 + \mathbb{e}\,\mathbf{grad}(\operatorname{div}\mathbb{e}\boldsymbol{E}_0 - \varrho(0))^\sharp,\\ \mathbb{e}\boldsymbol{E}_3 &= -\boldsymbol{J}''(0) - \mathbf{curl}\,\mathbb{\mu}^{-1}\,\mathbf{curl}\,\boldsymbol{E}_1 + \mathbb{e}\,\mathbf{grad}(\operatorname{div}\mathbb{e}\boldsymbol{E}_1 - \varrho'(0))^\sharp.\end{aligned}$$

- *in the mixed framework: the same conditions on* $\boldsymbol{J}$ *and* ϱ *as above, plus* $\varrho \in W^{4,p}(0,T;H^{-1}(\Omega))$*, together with* $(\boldsymbol{E}_{2T},\boldsymbol{E}_{3T}) \in \tilde{\boldsymbol{X}}_{N,-s}(\Omega;\mathbb{e}) \times \boldsymbol{X}_{N,-s}(\Omega;\mathbb{e})$*, i.e.,*

$$\begin{aligned}&\boldsymbol{E}_{2T} = -\mathbb{e}^{-1}(\mathbf{curl}\,\mathbb{\mu}^{-1}\,\mathbf{curl}\,\boldsymbol{E}_0 + \boldsymbol{J}'_T(0)) \in \boldsymbol{H}_0(\mathbf{curl},\Omega),\\ &\textit{with} \quad \mathbb{\mu}^{-1}\,\mathbf{curl}\,\boldsymbol{E}_{2T} \in \boldsymbol{H}(\mathbf{curl},\Omega),\\ &\boldsymbol{E}_{3T} = -\mathbb{e}^{-1}(\mathbf{curl}\,\mathbb{\mu}^{-1}\,\mathbf{curl}\,\boldsymbol{E}_1 + \boldsymbol{J}''_T(0)) \in \boldsymbol{H}_0(\mathbf{curl},\Omega).\end{aligned}$$

The same theorems applied to the magnetic field equations give us...

Proposition 7.6.3 *In order to have* $\boldsymbol{H} \in W^{2,p}(0,T;\tilde{\boldsymbol{X}}_T(\Omega;\mathbb{\mu})) \cap W^{4,p}(0,T;\boldsymbol{L}^2(\Omega))$ *and* $P_H \in W^{2,p}(0,T;H^1_{zmv}(\Omega))$ *if applicable, it is sufficient to assume:*

- *in the non-mixed framework:* $\mathbb{e}^{-1}\boldsymbol{J} \in W^{3,p}(0,T;\boldsymbol{H}_0(\mathbf{curl},\Omega))$*, together with the higher-order initial data* $(\boldsymbol{H}_2,\boldsymbol{H}_3) \in \tilde{\boldsymbol{X}}_T(\Omega;\mathbb{\mu}) \times \boldsymbol{X}_T(\Omega;\mathbb{\mu})$*, where:*

$$\begin{aligned}\mathbb{\mu}\boldsymbol{H}_2 &= \mathbf{curl}\,\mathbb{e}^{-1}\boldsymbol{J}(0) - \mathbf{curl}\,\mathbb{e}^{-1}\,\mathbf{curl}\,\boldsymbol{H}_0 + \mathbb{\mu}\,\mathbf{grad}\operatorname{div}\mathbb{\mu}\boldsymbol{H}_0,\\ \mathbb{\mu}\boldsymbol{H}_3 &= \mathbf{curl}\,\mathbb{e}^{-1}\boldsymbol{J}'(0) - \mathbf{curl}\,\mathbb{e}^{-1}\,\mathbf{curl}\,\boldsymbol{H}_1 + \mathbb{\mu}\,\mathbf{grad}\operatorname{div}\mathbb{\mu}\boldsymbol{H}_1.\end{aligned}$$

- *in the mixed framework:* $\mathbb{e}^{-1}\boldsymbol{J} \in W^{3,p}(0,T;\boldsymbol{H}_0(\mathbf{curl},\Omega))$ *again, together with* $(\boldsymbol{H}_2,\boldsymbol{H}_3) \in \tilde{\boldsymbol{K}}_T(\Omega;\mathbb{\mu}) \times \boldsymbol{K}_T(\Omega;\mathbb{\mu})$*.*

  Recall that the r.h.s. of (7.51, bottom) *is zero, while that of* (7.51, top) *automatically belongs, at any time, to* $\boldsymbol{K}_T(\Omega;\mathbb{\mu})$ *under the above assumption. By the same token, the Lagrange multiplier* P_H *is zero.*

As announced at the beginning of the section, one can actually rid oneself of the topological conditions on Ω. The spaces $\boldsymbol{Z}_N(\Omega;\mathbb{e}), \boldsymbol{Z}_T(\Omega;\mathbb{\mu})$ obviously have a doubly orthogonal complement in the spaces $\boldsymbol{X}_{N,-s}(\Omega;\mathbb{e})$, $\boldsymbol{X}_T(\Omega;\mathbb{\mu})$, for the weighted $\boldsymbol{L}^2$ scalar product and the form $\tilde{a}$.

[7] If $\mathbb{e}$ is scalar-valued and belongs to $W^{1,\infty}(\Omega)$, a sufficient condition to ensure this is $\varrho^\sharp \in W^{2,p}(0,T;\Phi_{N,-s}(\Omega;\mathbb{e}))$. In both cases, the condition on ϱ implies $\varrho^\sharp \in W^{2,p}(0,T;H^1_0(\Omega))$, which is needed for the mixed problem.

1. The general theory of §4.4 can still be applied to the component of the fields that is orthogonal to the $\boldsymbol{Z}$-spaces. Actually, it belongs to a space where the form $\tilde{a}$ is coercive and double orthogonality holds.
2. The component of the fields on the $\boldsymbol{Z}$-spaces has been characterised in §6.3.4. Furthermore, these spaces are obviously included in the improved regularity spaces defined in Proposition 7.6.1:

$$\boldsymbol{Z}_N(\Omega;\mathbb{e}) \subset \tilde{\boldsymbol{X}}_{N,-s}(\Omega;\mathbb{e})\,; \quad \boldsymbol{Z}_T(\Omega;\mathbb{\mu}) \subset \tilde{\boldsymbol{X}}_T(\Omega;\mathbb{\mu}),$$

   as well as in any space of type $D(\mathtt{A}_E^s)$, $D(\mathtt{A}_H^s)$. Thus, they have the same space regularity as the latter.
3. The component of the magnetic field along $\boldsymbol{Z}_T(\Omega;\mathbb{\mu})$ is constant (Eq. (6.43)); it does not affect the time regularity of the solution.
4. The component of the electric field along $\boldsymbol{Z}_N(\Omega;\mathbb{e})$ is given by (6.44). Thus, its time regularity is that of $\boldsymbol{J}$ seen as a function with values in $\boldsymbol{L}^2$: again, this does not decrease the regularity of the whole electric field.

8

Analyses of time-harmonic problems

In this chapter, we specifically study the time-harmonic Maxwell equations. They derive from the time-dependent equations by assuming that the time dependence of the data and fields is proportional to $\exp(-\imath\omega t)$, for a pulsation $\omega \geq 0$ (the frequency is equal to $\omega/(2\pi)$). When the pulsation ω is not known, the time-harmonic problem models free vibrations of the electromagnetic fields. One has to solve an eigenproblem, for which both the fields and the pulsation are unknowns. On the other hand, when ω is part of the data, the time-harmonic problem models sustained vibrations. Generally speaking, we refer to this problem as a Helmholtz-like problem, for which the only unknown is the fields.

We refer to Chapter 1 for the models, and we rely on the mathematical tools introduced in Chapters 2, 3, 4, and 6. Unless otherwise specified, we consider complex-valued function spaces.

From the theory (cf. §4.5), we see that one must have some compactness at hand to be able to study both problems. Several compact imbeddings theorems, namely those of $\boldsymbol{X}_{N,-s}(\Omega;\mathfrak{c})$ and $\boldsymbol{X}_T(\Omega;\mathfrak{p})$ in $\boldsymbol{L}^2(\Omega)$, have already been derived in §7.5. As these spaces are defined by perfectly conducting boundary conditions, this will allow us to solve the eigenproblems and the Helmholtz-like problems in a (closed) cavity, i.e., a medium encased in a perfect conductor. In parallel, we also address the case of a truncated exterior problem, namely the diffraction problem around a perfectly conducting object, where truncation is performed with the help of an artificial boundary where an absorbing boundary condition (ABC) is imposed. For that, we need some additional compact imbedding results that are proven in the next section.

8.1 Compact imbeddings: complements

Following the discussion in §7.5, let us address the case of the function space with elements that have a normal trace that belongs to $L^2(\Gamma)$, where $\mathfrak{k}$ is a

tensor field that fulfills (5.10):

$$\boldsymbol{Y}_T(\Omega;\mathfrak{k}) := \{\boldsymbol{f} \in \boldsymbol{H}(\mathbf{curl},\Omega) \cap \boldsymbol{H}(\operatorname{div}\mathfrak{k},\Omega) \ : \ \mathfrak{k}\boldsymbol{f}\cdot\boldsymbol{n}_{|\Gamma} \in L^2(\Gamma)\},$$

endowed with the graph norm

$$\|\boldsymbol{f}\|_{\boldsymbol{Y}_T(\Omega;\mathfrak{k})} := \left\{\|\boldsymbol{f}\|^2_{\boldsymbol{H}(\mathbf{curl},\Omega)} + \|\operatorname{div}\mathfrak{k}\boldsymbol{f}\|^2 + \|\mathfrak{k}\boldsymbol{f}\cdot\boldsymbol{n}\|^2_{L^2(\Gamma)}\right\}^{1/2}.$$

Below, we focus on the compact imbedding of $\boldsymbol{Y}_T(\Omega;\mathfrak{k})$ in $\boldsymbol{L}^2(\Omega)$. Note also that the equivalence of norms in $\boldsymbol{Y}_T(\Omega;\mathfrak{k})$, namely the control of the $\boldsymbol{L}^2(\Omega)$-norm, could be obtained as usual.

Theorem 8.1.1 *Let Ω be a domain such that* $\mathbf{(Top)}_{I=0}$ *or* $\mathbf{(Top)}_{I>0}$ *is fulfilled, and let $\mathfrak{k}$ be a tensor field that fulfills assumption (5.10). It holds that $\boldsymbol{Y}_T(\Omega;\mathfrak{k}) \subset_c \boldsymbol{L}^2(\Omega)$.*

Proof. Let $(\boldsymbol{y}_m)_m$ be a bounded sequence of $\boldsymbol{Y}_T(\Omega;\mathfrak{k})$. For all m, we split $\boldsymbol{y}_m$ continuously into a part that belongs to $\boldsymbol{X}_T(\Omega;\mathfrak{k})$, and a part with a normal trace that matches $\mathfrak{k}\boldsymbol{y}_m\cdot\boldsymbol{n}_{|\Gamma}$. Then, we prove that one can extract a subsequence that converges in $\boldsymbol{L}^2(\Omega)$ from the sequence with normal traces that match those of $(\boldsymbol{y}_m)_m$ and, on the other hand, we use Theorem 7.5.3 to extract a converging subsequence from the sequence of elements of $\boldsymbol{X}_T(\Omega;\mathfrak{k})$.
1. Note that if $(\operatorname{div}\mathfrak{k}\boldsymbol{y}_m|1) = (\mathfrak{k}\boldsymbol{y}_m\cdot\boldsymbol{n},1)_{L^2(\Gamma)}$ is not equal to zero, one has to modify the divergence(ξ) of the part that belongs to $\boldsymbol{X}_T(\Omega;\mathfrak{k})$, because $(\operatorname{div}\mathfrak{k}\boldsymbol{z}|1) = 0$ for all $\boldsymbol{z} \in \boldsymbol{X}_T(\Omega;\mathfrak{k})$. So, let us define the average value $c_m := (\mathfrak{k}\boldsymbol{y}_m\cdot\boldsymbol{n},1)_{L^2(\Gamma)}/area(\Gamma)$ and $c'_m := (\mathfrak{k}\boldsymbol{y}_m\cdot\boldsymbol{n},1)_{L^2(\Gamma)}/vol(\Omega)$.
Let $u_m \in H^1_{zmv}(\Omega)$ be the unique solution to $\operatorname{div}\mathfrak{k}\,\mathbf{grad}\,u_m = c'_m$ in Ω and $\mathfrak{k}\,\mathbf{grad}\,u_m\cdot\boldsymbol{n}_{|\Gamma} = c_m$, or equivalently,

$$\begin{cases} \textit{Find } u_m \in H^1_{zmv}(\Omega) \textit{ such that} \\ \forall q \in H^1_{zmv}(\Omega),\ (\mathfrak{k}\,\mathbf{grad}\,u_m|\,\mathbf{grad}\,q) = -c'_m(1|q) + c_m(1,q)_{L^2(\Gamma)}\,. \end{cases}$$

We remark that one has $u_m = c_m\,\mathtt{u}$, where $\mathtt{u} \in H^1_{zmv}(\Omega)$ is the unique solution to $\operatorname{div}\mathfrak{k}\,\mathbf{grad}\,\mathtt{u} = area(\Gamma)/vol(\Omega)$ in Ω and $\mathfrak{k}\,\mathbf{grad}\,\mathtt{u}\cdot\boldsymbol{n}_{|\Gamma} = 1$. But according to the Cauchy-Schwarz inequality, it holds that $|c_m| \le \|\mathfrak{k}\boldsymbol{y}_m\cdot\boldsymbol{n}\|_{L^2(\Gamma)}/area(\Gamma)^{1/2}$, so $(u_m)_m$ is bounded in the one-dimensional vector space span($\mathtt{u}$). Hence, one can extract a subsequence still denoted $(u_m)_m$ that converges in this space, so that $(\mathbf{grad}\,u_m)_m$ converges in $\boldsymbol{L}^2(\Omega)$.
2. Then, define $g_m := \mathfrak{k}\boldsymbol{y}_m\cdot\boldsymbol{n}_{|\Gamma} - c_m \in L^2(\Gamma)$ and let $v_m \in H^1_{zmv}(\Omega)$ be the unique solution to $\operatorname{div}\mathfrak{k}\,\mathbf{grad}\,v_m = 0$ in Ω and $\mathfrak{k}\,\mathbf{grad}\,v_m\cdot\boldsymbol{n}_{|\Gamma} = g_m$, or equivalently,

$$\begin{cases} \textit{Find } v_m \in H^1_{zmv}(\Omega) \textit{ such that} \\ \forall q \in H^1_{zmv}(\Omega),\ (\mathfrak{k}\,\mathbf{grad}\,v_m|\,\mathbf{grad}\,q) = (g_m,q)_{L^2(\Gamma)}\,. \end{cases}$$

By construction, $(g_m)_m$ is bounded in $L^2(\Gamma)$, so on the one hand, $(v_m)_m$ is bounded in $H^1(\Omega)$, and consequently, $(v_{m|\Gamma})_m$ is bounded in $H^{1/2}(\Gamma)$, and,

on the other hand, thanks to Proposition 2.1.43, one can extract a subsequence still denoted $(g_m)_m$ that converges in $H^{-1/2}(\Gamma)$. Denoting $g_{mn} := g_m - g_n$, $v_{mn} := v_m - v_n$, it follows that

$$\begin{aligned}\|\mathfrak{k}^{1/2}\,\mathbf{grad}\,v_{mn}\|^2 &= \langle g_{mn}, v_{mn}\rangle_{H^{1/2}(\Gamma)} \leq \|g_{mn}\|_{H^{-1/2}(\Gamma)}\,\|v_{mn}\|_{H^{1/2}(\Gamma)}\\ &\leq 2\sup_m(\|v_m\|_{H^{1/2}(\Gamma)})\,\|g_{mn}\|_{H^{-1/2}(\Gamma)}.\end{aligned}$$

So, $(\mathbf{grad}\,v_m)_m$ is a Cauchy sequence in $\boldsymbol{L}^2(\Omega)$, and it converges in this space.
3. Let $\boldsymbol{y}'_m := \boldsymbol{y}_m - \mathbf{grad}(u_m + v_m)$: by construction, one has $\mathbf{curl}\,\boldsymbol{y}'_m = \mathbf{curl}\,\boldsymbol{y}_m$ and $\operatorname{div}\mathfrak{k}\boldsymbol{y}'_m = \operatorname{div}\mathfrak{k}\boldsymbol{y}_m - c'_m$ in Ω and $\mathfrak{k}\boldsymbol{y}'_m\cdot\boldsymbol{n}_{|\Gamma} = 0$. And, it follows that $(\boldsymbol{y}'_m)_m$ is a bounded sequence in $\boldsymbol{X}_T(\Omega;\mathfrak{k})$ (with respect to the graph norm). According to Theorem 7.5.3, we can extract a subsequence that converges in $\boldsymbol{L}^2(\Omega)$, which ends the proof. ■

Remark 8.1.2 *In the same spirit as Remark 7.5.4, we can generalize this last result. Given $s, t \in [0, 1/2[$, one can prove that the function space*

$$\boldsymbol{Y}_{T,-s,-t}(\Omega;\mathfrak{k}) := \{\boldsymbol{f} \in \boldsymbol{H}(\mathbf{curl},\Omega)\ :\ \mathfrak{k}\boldsymbol{f} \in \boldsymbol{H}_{-s}(\operatorname{div},\Omega),\ \mathfrak{k}\boldsymbol{f}\cdot\boldsymbol{n}_{|\Gamma} \in H^{-t}(\Gamma)\}$$

is compactly imbedded in $\boldsymbol{L}^2(\Omega)$ by using the same proof as above, replacing the L^2 scalar products on Ω, respectively on Γ, with $\langle\cdot,\cdot\rangle_{H_0^s(\Omega)}$, respectively $\langle\cdot,\cdot\rangle_{H_0^t(\Gamma)}$.

Finally, we investigate the function space whose elements have a tangential trace that belongs to $\boldsymbol{L}^2_t$ on a part of the boundary, and vanishes elsewhere. More precisely, we consider that the boundary Γ is equal to $\Gamma_P \cup \Gamma_A$, with $\partial\Gamma_P \cap \partial\Gamma_A = \emptyset$, and define

$$\boldsymbol{X}_{N,A}(\Omega;\mathfrak{k}) := \{\boldsymbol{f} \in \boldsymbol{H}_{0,\Gamma_P}(\mathbf{curl},\Omega)\ :\ \operatorname{div}\mathfrak{k}\boldsymbol{f} \in L^2(\Omega),\ \boldsymbol{f}\times\boldsymbol{n}_{|\Gamma_A} \in \boldsymbol{L}^2_t(\Gamma_A)\},$$

endowed with the graph norm

$$\|\boldsymbol{f}\|_{\boldsymbol{X}_{N,A}(\Omega;\mathfrak{k})} := \left\{\|\boldsymbol{f}\|^2_{\boldsymbol{H}(\mathbf{curl},\Omega)} + \|\operatorname{div}\mathfrak{k}\boldsymbol{f}\|^2 + \|\boldsymbol{f}\times\boldsymbol{n}\|^2_{\boldsymbol{L}^2_t(\Gamma_A)}\right\}^{1/2}.$$

Again, we focus on the compact imbedding of $\boldsymbol{X}_{N,A}(\Omega;\mathfrak{k})$ in $\boldsymbol{L}^2(\Omega)$, noting that the equivalence of norms in $\boldsymbol{X}_{N,A}(\Omega;\mathfrak{k})$ could be obtained as usual.

Theorem 8.1.3 *Let Ω be a domain, and let $\mathfrak{k}$ be a tensor field that fulfills assumption (5.10). One has $\boldsymbol{X}_{N,A}(\Omega;\mathfrak{k}) \subset_c \boldsymbol{L}^2(\Omega)$.*

Proof. Consider $(\boldsymbol{y}_m)_m$ a bounded sequence of $\boldsymbol{X}_{N,A}(\Omega;\mathfrak{k})$. Similarly to the proof of Theorem 7.5.1, we split, for all m, the field $\boldsymbol{y}_m$ into three parts. Furthermore, the first two parts – namely $\mathbf{grad}\,q^0_m$; $\boldsymbol{z}^\xi_m := P_{\boldsymbol{Z}^\xi_N}\boldsymbol{y}_m \in \boldsymbol{Z}_N(\Omega;\mathfrak{k})$ – are built as in the above-mentioned proof, and one can extract subsequences $(\mathbf{grad}\,q^0_m)_m$, $(\boldsymbol{z}^\xi_m)_m$ that converge in $\boldsymbol{L}^2(\Omega)$.
Then, let $\boldsymbol{x}_m := \boldsymbol{y}_m - \mathbf{grad}\,q^0_m - \boldsymbol{z}^\xi_m \in \boldsymbol{H}_{0,\Gamma_P}(\mathbf{curl},\Omega)$. The sequence $(\boldsymbol{x}_m)_m$

is bounded in $\boldsymbol{L}^2(\Omega)$. In addition, $\operatorname{div} \mathfrak{c}\boldsymbol{x}_m = 0$ and $\mathbf{curl}\, \boldsymbol{x}_m = \mathbf{curl}\, \boldsymbol{y}_m$ in Ω, $\langle \mathfrak{c}\boldsymbol{x}_m \cdot \boldsymbol{n}, 1\rangle_{H^{1/2}(\Gamma_k)} = 0$ for all k and $\boldsymbol{x}_m \times \boldsymbol{n}_{|\Gamma_A} = \boldsymbol{y}_m \times \boldsymbol{n}_{|\Gamma_A}$. Using Theorem 3.4.1, for every m, there exists a sequence $(\boldsymbol{w}_m)_m$ of elements of $\boldsymbol{H}^1_{zmv}(\Omega)$ such that $\mathfrak{c}\boldsymbol{x}_m = \mathbf{curl}\, \boldsymbol{w}_m$ in Ω, which is bounded in $\boldsymbol{H}^1(\Omega)$. Hence, given $\eta \in]0, 1/2[$, there exists a subsequence, still denoted by $(\boldsymbol{w}_m)_m$, that converges in $\boldsymbol{H}^{1-\eta}(\Omega)$. This implies, on the one hand, that $(\boldsymbol{w}_m)_m$ converges in $\boldsymbol{L}^2(\Omega)$, and on the other hand, that $(\boldsymbol{w}_{m|\Gamma})_m$ converges in $\boldsymbol{L}^2(\Gamma)$. Defining the subsequence $(\boldsymbol{x}_m)_m$ with the same indices and denoting $\boldsymbol{x}_{mn} := \boldsymbol{x}_m - \boldsymbol{x}_n$ and $\boldsymbol{w}_{mn} := \boldsymbol{w}_m - \boldsymbol{w}_n$, one finds, by integration by parts (obtained by the density of smooth fields in $\boldsymbol{H}_{0,\Gamma_P}(\mathbf{curl}, \Omega)$, cf. Definition 2.2.27),

$$\begin{aligned}
\|\mathfrak{c}^{1/2}\boldsymbol{x}_{mn}\|^2 &= (\boldsymbol{x}_{mn} | \,\mathbf{curl}\, \boldsymbol{w}_{mn}) \\
&= (\mathbf{curl}\, \boldsymbol{x}_{mn} | \boldsymbol{w}_{mn}) + (\boldsymbol{x}_{mn} \times \boldsymbol{n}, (\boldsymbol{w}_{mn})_\top)_{\boldsymbol{L}^2_t(\Gamma_A)} \\
&= (\mathbf{curl}\, \boldsymbol{y}_{mn} | \boldsymbol{w}_{mn}) + (\boldsymbol{y}_{mn} \times \boldsymbol{n}, (\boldsymbol{w}_{mn})_\top)_{\boldsymbol{L}^2_t(\Gamma_A)} \\
&\leq 2 \sup_m (\|\boldsymbol{y}_m\|_{\boldsymbol{X}_{N,A}(\Omega;\mathfrak{c})}) \, (\|\boldsymbol{w}_{mn}\| + \|\boldsymbol{w}_{mn}\|_{\boldsymbol{L}^2(\Gamma)}).
\end{aligned}$$

So, $(\boldsymbol{x}_m)_m$ is a Cauchy sequence in $\boldsymbol{L}^2(\Omega)$, and it converges in this space. By construction, one has $\boldsymbol{y}_m := \boldsymbol{x}_m - \mathbf{grad}\, q^0_m - \boldsymbol{z}^\xi_m$, so the subsequence $(\boldsymbol{y}_m)_m$ converges in $\boldsymbol{L}^2(\Omega)$. ■

Remark 8.1.4 *We can generalize this last result. Given $s \in [0, 1[$, one can prove that the function space*

$$\boldsymbol{X}_{N,-s,A}(\Omega; \mathfrak{c}) := \{\boldsymbol{f} \in \boldsymbol{H}_{0,\Gamma_P}(\mathbf{curl}, \Omega) \ : \ \operatorname{div} \mathfrak{c}\boldsymbol{f} \in H^{-s}(\Omega), \ \boldsymbol{f} \times \boldsymbol{n}_{|\Gamma_A} \in \boldsymbol{L}^2_t(\Gamma_A)\}$$

is compactly imbedded in $\boldsymbol{L}^2(\Omega)$ by using the same proof as above, replacing the $L^2(\Omega)$ scalar product with $\langle \cdot, \cdot \rangle_{H^s_0(\Omega)}$.

8.2 Free vibrations in a domain encased in a cavity

In a domain Ω encased in a perfect conductor, i.e., a cavity problem, the free vibrations are governed by the first-order equations (1.52)-(1.55) with zero right-hand sides, plus boundary conditions (5.8) and (5.9). This is the first-order system, whose unknowns are the couple of electromagnetic fields $(\boldsymbol{E}, \boldsymbol{H}) \in \boldsymbol{L}^2(\Omega)^2$, $(\boldsymbol{E}, \boldsymbol{H}) \neq (0, 0)$ and the number $\omega \in \mathbb{R}$, $\omega \geq 0$. As we saw in §1.2.1, this implies the second-order equations (1.58)-(1.61):

$$-\lambda \mathfrak{e}\boldsymbol{E} + \mathbf{curl}(\mathfrak{u}^{-1}\, \mathbf{curl}\, \boldsymbol{E}) = 0, \tag{8.1}$$

$$-\lambda \mathfrak{u}\boldsymbol{H} + \mathbf{curl}(\mathfrak{e}^{-1}\, \mathbf{curl}\, \boldsymbol{H}) = 0, \tag{8.2}$$

$$\operatorname{div} \mathfrak{e}\boldsymbol{E} = 0, \tag{8.3}$$

$$\operatorname{div} \mathfrak{u}\boldsymbol{H} = 0, \tag{8.4}$$

plus boundary conditions (5.8), (5.9) and (7.10): $\boldsymbol{E} \times \boldsymbol{n}_{|\Gamma} = 0$, $\mathfrak{u}\boldsymbol{H} \cdot \boldsymbol{n}_{|\Gamma} = 0$ and $\mathfrak{e}^{-1}\, \mathbf{curl}\, \boldsymbol{H} \times \boldsymbol{n}_{|\Gamma} = 0$. The unknowns are the couple of electromagnetic

fields $(\boldsymbol{E}, \boldsymbol{H}) \in \boldsymbol{H}(\mathbf{curl}, \Omega)^2$, $(\boldsymbol{E}, \boldsymbol{H}) \neq (0,0)$ and the number $\lambda = \omega^2$, $\lambda \geq 0$. As usual, we assume that $\mathbb{e}$ and $\mathbb{\mu}$ are tensor fields that fulfill assumption (5.10). In the second-order equations (8.1)-(8.4), the fields $\boldsymbol{E}$ and $\boldsymbol{H}$ are decoupled. So, one can solve an eigenproblem in $\boldsymbol{E}$ and an eigenproblem in $\boldsymbol{H}$, and finally check that any solution of these two eigenproblems leads to a solution of the first-order system.

8.2.1 Electric eigenproblem

Let us begin with the eigenproblem in the electric field. In this case, the unknowns $\boldsymbol{E}$ and λ are governed by

$$\begin{cases} \textit{Find } (\boldsymbol{E}, \lambda) \in (\boldsymbol{H}(\mathbf{curl}, \Omega) \setminus \{0\}) \times \mathbb{C} \textit{ such that} \\ \mathbf{curl}(\mathbb{\mu}^{-1}\, \mathbf{curl}\, \boldsymbol{E}) = \lambda \mathbb{e} \boldsymbol{E} \text{ in } \Omega, \\ \operatorname{div} \mathbb{e} \boldsymbol{E} = 0 \text{ in } \Omega, \\ \boldsymbol{E} \times \boldsymbol{n} = 0 \text{ on } \Gamma. \end{cases} \tag{8.5}$$

All eigenfields belong to the closed vector subspace $\boldsymbol{K}_N(\Omega; \mathbb{e})$ of $\boldsymbol{X}_N(\Omega; \mathbb{e})$.

Proposition 8.2.1 *The variational formulation*

$$\begin{cases} \text{Find } (\boldsymbol{E}, \lambda) \in (\boldsymbol{K}_N(\Omega; \mathbb{e}) \setminus \{0\}) \times \mathbb{C} \text{ such that} \\ \forall \boldsymbol{v} \in \boldsymbol{K}_N(\Omega; \mathbb{e}),\ (\mathbb{\mu}^{-1}\, \mathbf{curl}\, \boldsymbol{E} | \, \mathbf{curl}\, \boldsymbol{v}) = \lambda (\mathbb{e} \boldsymbol{E} | \boldsymbol{v}) \end{cases} \tag{8.6}$$

is equivalent to (8.5).

Proof. On the one hand, it is clear by integration by parts that if $(\boldsymbol{E}, \lambda)$ is governed by (8.5), then it solves the variational formulation (8.6). On the other hand, consider $(\boldsymbol{E}, \lambda)$ that solves (8.6). Since $\boldsymbol{E}$ belongs to $\boldsymbol{K}_N(\Omega; \mathbb{e})$, one has $\boldsymbol{E} \in \boldsymbol{H}(\mathbf{curl}, \Omega)$ with $\operatorname{div} \mathbb{e} \boldsymbol{E} = 0$ in Ω and $\boldsymbol{E} \times \boldsymbol{n}_{|\Gamma} = 0$. To recover the last equation, consider $\boldsymbol{z} \in \boldsymbol{D}(\Omega)$. Applying a standard procedure, we can subtract the gradient of the scalar field $z \in H_0^1(\Omega)$ characterized by $\operatorname{div} \mathbb{e}\, \mathbf{grad}\, z = \operatorname{div} \mathbb{e} \boldsymbol{z}$, so that $\boldsymbol{v} := \boldsymbol{z} - \mathbf{grad}\, z$ belongs to $\boldsymbol{K}_N(\Omega; \mathbb{e})$. Using it as a test function in (8.6) yields

$$\begin{aligned} \langle \mathbf{curl}(\mathbb{\mu}^{-1}\, \mathbf{curl}\, \boldsymbol{E}), \overline{\boldsymbol{z}} \rangle &= (\mathbb{\mu}^{-1}\, \mathbf{curl}\, \boldsymbol{E} | \, \mathbf{curl}\, \boldsymbol{z}) = (\mathbb{\mu}^{-1}\, \mathbf{curl}\, \boldsymbol{E} | \, \mathbf{curl}\, \boldsymbol{v}) \\ &= \lambda (\mathbb{e} \boldsymbol{E} | \boldsymbol{v}) = \lambda (\mathbb{e} \boldsymbol{E} | \boldsymbol{z} - \mathbf{grad}\, z) = \lambda (\mathbb{e} \boldsymbol{E} | \boldsymbol{z}). \end{aligned}$$

The last equality follows by integration by parts, if one recalls that z belongs to $H_0^1(\Omega)$, whereas $\operatorname{div} \mathbb{e} \boldsymbol{E} = 0$ in Ω. ■

Observe that if one chooses $\boldsymbol{v} = \boldsymbol{E}$ in (8.6), one finds $\lambda \in \mathbb{R}$, $\lambda \geq 0$.
To solve (8.6), one uses Theorem 4.5.13, which considers the solution of an eigenproblem with constraints, set in $V = \boldsymbol{X}_N(\Omega; \mathbb{e})$ and $H = \boldsymbol{L}^2(\Omega)$, where the latter is endowed with $\|\mathbb{e}^{1/2} \cdot \|$. To that aim, we prove below that the closure of $K = \boldsymbol{K}_N(\Omega; \mathbb{e})$ in $\boldsymbol{L}^2(\Omega)$ is the (closed) vector subspace $\boldsymbol{H}(\operatorname{div} \mathbb{e} 0, \Omega)$ (see Definition 2.2.11).

Proposition 8.2.2 *Let Ω be a domain such that* $\mathbf{(Top)}_{I=0}$ *or* $\mathbf{(Top)}_{I>0}$ *is fulfilled, and let $\mathbb{c}$ be a tensor field that fulfills assumption (5.10). Then, $\boldsymbol{K}_N(\Omega;\mathbb{c})$ is dense in $\boldsymbol{H}(\operatorname{div}\mathbb{c}0,\Omega)$.*

Remark 8.2.3 *The spaces $\boldsymbol{K}_N(\Omega;\mathbb{c}) = \mathcal{K}_E$ and $\boldsymbol{H}(\operatorname{div}\mathbb{c}0,\Omega) = \mathcal{L}_E$ have already been encountered in §7.4.2, where we showed that $\boldsymbol{K}_N(\Omega;\mathbb{c})$ satisfies a double orthogonality property within $\boldsymbol{H}_0(\mathbf{curl},\Omega)$ (Proposition 7.4.3). The density result is a consequence of this property (Lemma 4.3.18). Here, we provide an elementary proof.*

Proof. Classically, it is enough to check that any element of the dual space $(\boldsymbol{H}(\operatorname{div}\mathbb{c}0,\Omega))'$ that vanishes on $\boldsymbol{K}_N(\Omega;\mathbb{c})$ is equal to 0. Thanks to the Riesz theorem 4.2.1, any such element can be represented by $\boldsymbol{v}\in\boldsymbol{H}(\operatorname{div}\mathbb{c}0,\Omega)$, and its action by $\boldsymbol{w}\mapsto(\mathbb{c}\boldsymbol{v}|\boldsymbol{w})$. Now, choose $\boldsymbol{w}\in\boldsymbol{Z}_N(\Omega;\mathbb{c})$, which is a subset of $\boldsymbol{H}(\operatorname{div}\mathbb{c}0,\Omega)$. This yields $\langle\mathbb{c}\boldsymbol{v}\cdot\boldsymbol{n},1\rangle_{H^{1/2}(\Gamma_k)}=0$ for all k. According to Theorem 3.6.1, there exist $\boldsymbol{z}\in\boldsymbol{H}_0^{\Sigma}(\operatorname{div}0,\Omega)$ such that $\mathbb{c}\boldsymbol{v}=\mathbf{curl}\,\boldsymbol{z}$ in Ω. Thus, one finds, by integration by parts,

$$\forall\boldsymbol{w}\in\boldsymbol{K}_N(\Omega;\mathbb{c}),\ 0=(\mathbb{c}\boldsymbol{v}|\boldsymbol{w})=(\mathbf{curl}\,\boldsymbol{z}|\boldsymbol{w})=(\boldsymbol{z}|\,\mathbf{curl}\,\boldsymbol{w}).$$

But, we know from Theorem 6.1.4 that the mapping $\boldsymbol{w}\mapsto\mathbf{curl}\,\boldsymbol{w}$ is surjective from $\boldsymbol{H}_0(\mathbf{curl},\Omega)$ onto $\boldsymbol{H}_0^{\Sigma}(\operatorname{div}0,\Omega)$. The surjectivity also holds from $\boldsymbol{K}_N(\Omega;\mathbb{c})$ onto the same function space. As a matter of fact, given $\boldsymbol{w}\in\boldsymbol{H}_0(\mathbf{curl},\Omega)$, one corrects the test function by subtracting the gradient of the scalar field $z\in H_0^1(\Omega)$ defined by $\operatorname{div}\mathbb{c}\,\mathbf{grad}\,z=\operatorname{div}\mathbb{c}\boldsymbol{w}$, so that $\boldsymbol{w}-\mathbf{grad}\,z$ belongs to $\boldsymbol{K}_N(\Omega;\mathbb{c})$ with $\mathbf{curl}(\boldsymbol{w}-\mathbf{grad}\,z)=\mathbf{curl}\,\boldsymbol{w}$ in Ω. Hence, there exists $\boldsymbol{w}'\in\boldsymbol{K}_N(\Omega;\mathbb{c})$ such that $\boldsymbol{z}=\mathbf{curl}\,\boldsymbol{w}'$ in Ω, and one has $\|\boldsymbol{z}\|^2=0$, and also $\boldsymbol{v}=0$. ■

To apply Theorem 4.5.13, we can choose $L=\boldsymbol{H}(\operatorname{div}\mathbb{c}0,\Omega)$. Also, we remark that the double orthogonality property involving $\boldsymbol{K}_N(\Omega;\mathbb{c})$ in $\boldsymbol{X}_N(\Omega;\mathbb{c})$ follows easily from the Helmholtz decomposition (6.16) or (7.47). Finally, we note that (8.6) is equivalently replaced by

$$\begin{cases}\textit{Find } (\boldsymbol{E},\lambda)\in(\boldsymbol{K}_N(\Omega;\mathbb{c})\setminus\{0\})\times\mathbb{C} \textit{ such that}\\ \forall\boldsymbol{v}\in\boldsymbol{K}_N(\Omega;\mathbb{c}),\ (\boldsymbol{E},\boldsymbol{v})_{\boldsymbol{X}_N(\Omega;\mathbb{c})}=(\lambda+1)(\mathbb{c}\boldsymbol{E}|\boldsymbol{v}),\end{cases}\tag{8.7}$$

where $(\cdot,\cdot)_{\boldsymbol{X}_N(\Omega;\mathbb{c})}$ is defined in (6.6), with $\mathbb{b}=\mathbb{p}^{-1}$. Then, we can apply Theorem 4.5.13 to derive the results below, which characterize electric eigenmodes.

Theorem 8.2.4 *Let Ω be a domain such that* $\mathbf{(Top)}_{I=0}$ *or* $\mathbf{(Top)}_{I>0}$ *is fulfilled, and let $\mathbb{c},\mathbb{p}$ be tensor fields that fulfill assumption (5.10). Then, there exists a Hilbert basis $(\boldsymbol{e}_m)_m$ of $\boldsymbol{H}(\operatorname{div}\mathbb{c}0,\Omega)$ made of eigenvectors of Problem (8.7) with corresponding strictly positive eigenvalues $(\lambda_m^E+1)_m$, such that $((\lambda_m^E+1)^{-1/2}\boldsymbol{e}_m)_m$ is a Hilbert basis of $\boldsymbol{K}_N(\Omega;\mathbb{c})$. Finally, the eigenvalues are all of finite multiplicities and they can be reordered as an increasing sequence of real numbers whose limit is $+\infty$.*

8.2.2 Magnetic eigenproblem

Let us continue with the eigenproblem in the magnetic field. The process is very similar to the electric case, so some parts are only sketched. The unknowns $\boldsymbol{H}$ and λ are governed by

$$\begin{cases} \textit{Find } (\boldsymbol{H},\lambda) \in (\boldsymbol{H}(\mathbf{curl},\Omega)\setminus\{0\})\times\mathbb{C} \textit{ such that} \\ \mathbf{curl}(\mathbb{e}^{-1}\,\mathbf{curl}\,\boldsymbol{H}) = \lambda\mathbb{m}\boldsymbol{H} \text{ in } \Omega, \\ \operatorname{div}\mathbb{m}\boldsymbol{H} = 0 \text{ in } \Omega, \\ \mathbb{m}\boldsymbol{H}\cdot\boldsymbol{n} = 0 \text{ on } \Gamma, \\ \mathbb{e}^{-1}\,\mathbf{curl}\,\boldsymbol{H}\times\boldsymbol{n} = 0 \text{ on } \Gamma. \end{cases} \tag{8.8}$$

All eigenfields now belong to the closed vector subspace $\boldsymbol{K}_T(\Omega;\mathbb{m})$ of $\boldsymbol{X}_T(\Omega;\mathbb{m})$.

Proposition 8.2.5 *The variational formulation*

$$\begin{cases} \text{Find } (\boldsymbol{H},\lambda) \in (\boldsymbol{K}_T(\Omega;\mathbb{m})\setminus\{0\})\times\mathbb{C} \text{ such that} \\ \forall\boldsymbol{v}\in\boldsymbol{K}_T(\Omega;\mathbb{m}),\ (\mathbb{e}^{-1}\,\mathbf{curl}\,\boldsymbol{H}|\,\mathbf{curl}\,\boldsymbol{v}) = \lambda(\mathbb{m}\boldsymbol{H}|\boldsymbol{v}) \end{cases} \tag{8.9}$$

is equivalent to (8.8).

Proof. It is clear by integration by parts that if $(\boldsymbol{H},\lambda)$ is governed by (8.8), then it solves the variational formulation (8.9). On the other hand, given $(\boldsymbol{H},\lambda)$ that solves (8.9), one has $\boldsymbol{H}\in\boldsymbol{H}(\mathbf{curl},\Omega)$ with $\operatorname{div}\mathbb{m}\boldsymbol{H}=0$ in Ω and $\mathbb{m}\boldsymbol{H}\cdot\boldsymbol{n}_{|\Gamma}=0$. To recover the first and last equations of (8.8), consider $\boldsymbol{z}\in\boldsymbol{H}(\mathbf{curl}\,\Omega)$. Applying another standard procedure, we can subtract the gradient of the scalar field $z\in H^1_{zmv}(\Omega)$ that solves the (well-posed) variational formulation: for all $z'\in H^1_{zmv}(\Omega)$, $(\mathbb{m}\,\mathbf{grad}\,z|\,\mathbf{grad}\,z') = (\mathbb{m}\boldsymbol{z}|\,\mathbf{grad}\,z')$. By construction, $\boldsymbol{v}:=\boldsymbol{z}-\mathbf{grad}\,z$ now belongs to $\boldsymbol{K}_T(\Omega;\mathbb{m})$ with $\mathbf{curl}\,\boldsymbol{v}=\mathbf{curl}\,\boldsymbol{z}$. Using it as a test function in (8.9) successively yields $\mathbf{curl}(\mathbb{e}^{-1}\,\mathbf{curl}\,\boldsymbol{H}) = \lambda\mathbb{m}\boldsymbol{H}$ in Ω (with $\boldsymbol{z}\in\boldsymbol{D}(\Omega)$), and then $\mathbb{e}^{-1}\,\mathbf{curl}\,\boldsymbol{H}\times\boldsymbol{n}_{|\Gamma}=0$. ■

If one chooses $\boldsymbol{v}=\boldsymbol{H}$ in (8.9), one has $\lambda\in\mathbb{R}$ and $\lambda\geq 0$. As explained in the electric case, one must consider (8.9) as an eigenproblem with constraints, set in $V=\boldsymbol{X}_T(\Omega;\mathbb{m})$ and $H=\boldsymbol{L}^2(\Omega)$, where H is endowed with $\|\mathbb{m}^{1/2}\cdot\|$. We first characterize the closure of $K=\boldsymbol{K}_T(\Omega;\mathbb{m})$ in $\boldsymbol{L}^2(\Omega)$.

Proposition 8.2.6 *Let Ω be a domain such that* $\mathbf{(Top)}_{I=0}$ *or* $\mathbf{(Top)}_{I>0}$ *is fulfilled, and let $\mathbb{m}$ be a tensor field that fulfills assumption (5.10). Then, $\boldsymbol{K}_T(\Omega;\mathbb{m})$ is dense in $\boldsymbol{H}_0(\operatorname{div}\mathbb{m}0,\Omega)$.*

Remark 8.2.7 *The spaces $\boldsymbol{K}_T(\Omega;\mathbb{m})=\mathcal{K}_H$ and $\boldsymbol{H}_0(\operatorname{div}\mathbb{e}0,\Omega)=\mathcal{L}_H$ have already been encountered in §7.4.2, where we showed that $\boldsymbol{K}_T(\Omega;\mathbb{m})$ satisfies a double orthogonality property within $\boldsymbol{H}(\mathbf{curl},\Omega)$ (Proposition 7.4.4). The density result is a consequence of this property (Lemma 4.3.18). Here, we provide an elementary proof.*

Proof. Let us check that any element of the dual space $(\boldsymbol{H}_0(\operatorname{div}\mathbb{m}0,\Omega))'$ that vanishes on $\boldsymbol{K}_T(\Omega;\mathbb{m})$ is equal to 0. Any such element can be represented

by $\boldsymbol{v} \in \boldsymbol{H}_0(\operatorname{div} \mathbb{\mu} 0, \Omega)$, and its action by $\boldsymbol{w} \mapsto (\mathbb{\mu}\boldsymbol{v}|\boldsymbol{w})$. Now, choose $\boldsymbol{w} \in \boldsymbol{Z}_T(\Omega; \mathbb{\mu})$, which is a subset of $\boldsymbol{H}_0(\operatorname{div} \mathbb{\mu} 0, \Omega)$, to find $\langle \mathbb{\mu}\boldsymbol{v} \cdot \boldsymbol{n}, 1\rangle_{\Sigma_i} = 0$ for all i. Due to Theorem 3.5.1, there exists $\boldsymbol{z} \in \boldsymbol{H}_0(\mathbf{curl}, \Omega) \cap \boldsymbol{H}^{\Gamma}(\operatorname{div} 0, \Omega)$ such that $\mathbb{\mu}\boldsymbol{v} = \mathbf{curl}\, \boldsymbol{z}$ in Ω. Hence, one finds, by integration by parts,

$$\forall \boldsymbol{w} \in \boldsymbol{K}_T(\Omega; \mathbb{\mu}),\ 0 = (\mathbb{\mu}\boldsymbol{v}|\boldsymbol{w}) = (\mathbf{curl}\, \boldsymbol{z}|\boldsymbol{w}) = (\boldsymbol{z}|\, \mathbf{curl}\, \boldsymbol{w}).$$

We know from Theorem 6.2.5 that the mapping $\boldsymbol{w} \mapsto \mathbf{curl}\, \boldsymbol{w}$ is surjective from $\boldsymbol{X}_T(\Omega; \mathbb{\mu})$ onto $\boldsymbol{H}^{\Gamma}(\operatorname{div} 0, \Omega)$. The surjectivity also holds from $\boldsymbol{K}_T(\Omega; \mathbb{\mu})$ onto the same function space if one corrects the fields by subtracting an appropriate gradient exactly as above (solving a variational formulation). Hence, there exists $\boldsymbol{w}' \in \boldsymbol{K}_T(\Omega; \mathbb{\mu})$ such that $\boldsymbol{z} = \mathbf{curl}\, \boldsymbol{w}'$ in Ω, and it follows that $\|\boldsymbol{z}\|^2 = 0$, and $\boldsymbol{v} = 0$. ■

We can choose $L = \boldsymbol{H}_0(\operatorname{div} \mathbb{\mu} 0, \Omega)$ to apply Theorem 4.5.13, replacing this time (8.9) with

$$\begin{cases} \textit{Find } (\boldsymbol{H}, \lambda) \in (\boldsymbol{K}_T(\Omega; \mathbb{\mu}) \setminus \{0\}) \times \mathbb{C} \textit{ such that} \\ \forall \boldsymbol{v} \in \boldsymbol{K}_T(\Omega; \mathbb{\mu}),\ (\boldsymbol{H}, \boldsymbol{v})_{\boldsymbol{X}_T(\Omega; \mathbb{\mu})} = (\lambda + 1)(\mathbb{\mu}\boldsymbol{H}|\boldsymbol{v}), \end{cases} \tag{8.10}$$

where $(\cdot, \cdot)_{\boldsymbol{X}_T(\Omega; \mathbb{\mu})}$ is defined in (6.26) with $\mathbb{c} = \mathbb{\varepsilon}^{-1}$. The double orthogonality property involving $\boldsymbol{K}_T(\Omega; \mathbb{\mu})$ in $\boldsymbol{X}_T(\Omega; \mathbb{\mu})$ stems from the Helmholtz decomposition (6.37) or (7.48). Below, we characterize magnetic eigenmodes.

Theorem 8.2.8 *Let Ω be a domain such that* $\mathbf{(Top)}_{I=0}$ *or* $\mathbf{(Top)}_{I>0}$ *is fulfilled, and let $\mathbb{\varepsilon}, \mathbb{\mu}$ be tensor fields that fulfill assumption (5.10). Then, there exists a Hilbert basis $(\boldsymbol{h}_m)_m$ of $\boldsymbol{H}_0(\operatorname{div} \mathbb{\mu} 0, \Omega)$ made of eigenvectors of Problem (8.10) with corresponding strictly positive eigenvalues $(\lambda_m^H + 1)_m$, such that $((\lambda_m^H + 1)^{-1/2} \boldsymbol{h}_m)_m$ is a Hilbert basis of $\boldsymbol{K}_T(\Omega; \mathbb{\mu})$. Finally, the eigenvalues are all of finite multiplicities and they can be reordered as an increasing sequence of real numbers whose limit is $+\infty$.*

8.2.3 Solving the first-order eigenproblem

Let $(\boldsymbol{e}_m, \lambda_m^E)_m$, respectively $(\boldsymbol{h}_m, \lambda_m^H)_m$ be the ordered sequence of electric eigenpairs, respectively magnetic eigenpairs. We study the way in which they are related, thus characterizing electromagnetic eigenmodes.
Consider first an electric eigenpair $(\boldsymbol{e}_m, \lambda_m^E)$. Two cases may occur: $\lambda_m^E = 0$ or $\lambda_m^E > 0$. If $\lambda_m^E = 0$, then the couple of electromagnetic fields $(\boldsymbol{e}_m, 0)$ is an eigenmode of the first-order system, with $\omega = 0$. Indeed, in this case, one has $\|\mathbb{\mu}^{-1/2}\, \mathbf{curl}\, \boldsymbol{e}_m\|^2 = 0$ in Ω. On the other hand, if $\lambda_m^E > 0$, let us define $\boldsymbol{h}'_m = -\imath(\lambda_m^E)^{-1/2} \mathbb{\mu}^{-1}\, \mathbf{curl}\, \boldsymbol{e}_m$. Then, the couple of electromagnetic fields $(\boldsymbol{e}_m, \boldsymbol{h}'_m)$ is an eigenmode of the first-order system, with $\omega = (\lambda_m^E)^{1/2}$.
Consider then a magnetic eigenpair $(\boldsymbol{h}_m, \lambda_m^H)$. The reasoning is very similar, and again, two cases may occur: $\lambda_m^H = 0$ or $\lambda_m^H > 0$. If $\lambda_m^H = 0$, then the couple of electromagnetic fields $(0, \boldsymbol{h}_m)$ is an eigenmode of the first-order system,

with $\omega = 0$, because in this case, one has $\|\mathbb{c}^{-1/2}\,\mathbf{curl}\,\boldsymbol{h}_m\|^2 = 0$ in Ω. On the other hand, if $\lambda_m^H > 0$, define $\boldsymbol{e}'_m = +\imath(\lambda_m^H)^{-1/2}\mathbb{c}^{-1}\,\mathbf{curl}\,\boldsymbol{h}_m$. Then, the couple of electromagnetic fields $(\boldsymbol{e}'_m, \boldsymbol{h}_m)$ is an eigenmode of the first-order system, with $\omega = (\lambda_m^H)^{1/2}$.
To conclude, it follows, by going one last time from either of the above solutions of the first-order system to the second-order eigenproblems, that the set of strictly positive eigenvalues is equal with same multiplicity, namely:

$$\{\lambda_m^E \ : \ \lambda_m^E > 0\} = \{\lambda_m^H \ : \ \lambda_m^H > 0\}.$$

However, it is possible that, when $\omega = 0$, the dimension of the vector space of purely electric eigenmodes – equal to $\dim(\boldsymbol{Z}_N(\Omega;\mathbb{c}))$ – is different from the dimension of the vector space of purely magnetic eigenmodes – equal to $\dim(\boldsymbol{Z}_T(\Omega;\mathbb{\mu}))$. It is even possible that there are no eigenmodes of one kind, while eigenmodes of the other kind exist.

8.3 Sustained vibrations

Generally speaking, the sustained vibrations with pulsation $\omega > 0$ of electromagnetic fields are governed by the first-order equations (1.52)-(1.55):

$$\imath\omega\mathbb{c}\boldsymbol{e} + \mathbf{curl}\,\boldsymbol{h} = \boldsymbol{j}, \tag{8.11}$$

$$-\imath\omega\mathbb{\mu}\boldsymbol{h} + \mathbf{curl}\,\boldsymbol{e} = 0, \tag{8.12}$$

$$\operatorname{div}\mathbb{c}\boldsymbol{e} = r, \tag{8.13}$$

$$\operatorname{div}\mathbb{\mu}\boldsymbol{h} = 0. \tag{8.14}$$

As usual, we assume that $\mathbb{c}$ and $\mathbb{\mu}$ are tensor fields that fulfill assumption (5.10). The data is $(\boldsymbol{j}, r)$, and it fulfills the charge conservation equation $-\imath\omega r + \operatorname{div}\boldsymbol{j} = 0$. The unknowns are the measurable and square integrable electromagnetic fields. Below, we consider several settings.

8.3.1 In a domain encased in a perfect conductor

In a domain Ω encased in a perfect conductor (cavity problem), the sustained vibrations are governed by Eqs. (8.11)-(8.14), plus boundary conditions (5.8) and (5.9): $\boldsymbol{e} \times \boldsymbol{n}_{|\Gamma} = 0$, $\mathbb{\mu}\boldsymbol{h} \cdot \boldsymbol{n}_{|\Gamma} = 0$. This is the first-order system. More precisely, the data $(\boldsymbol{j}, r)$ belongs to $\boldsymbol{L}^2(\Omega) \times H^{-1}(\Omega)$, and it fulfills the charge conservation equation in $H^{-1}(\Omega)$. The unknown is the couple of electromagnetic fields $(\boldsymbol{e}, \boldsymbol{h}) \in \boldsymbol{L}^2(\Omega)^2$. If ω^2 is an eigenvalue (cf. §8.2), the solution to the first-order system – if it exists – is not unique. So, in what follows, we assume that ω^2 is not an eigenvalue, namely that ω^2 does not belong to the (discrete) set of non-zero eigenvalues, which we denote by $\{\lambda_m \ : \ \lambda_m > 0\}$, with values arranged by increasing order.
As we saw in §1.2.1, this implies the second-order equations (1.58)-(1.61):

$$-\omega^2 \mathbb{e}\boldsymbol{e} + \mathbf{curl}(\mathbb{\mu}^{-1}\,\mathbf{curl}\,\boldsymbol{e}) = \imath\omega\boldsymbol{j}, \tag{8.15}$$

$$-\omega^2 \mathbb{\mu}\boldsymbol{h} + \mathbf{curl}(\mathbb{e}^{-1}(\mathbf{curl}\,\boldsymbol{h} - \boldsymbol{j})) = 0, \tag{8.16}$$

$$\operatorname{div} \mathbb{e}\boldsymbol{e} = r, \tag{8.17}$$

$$\operatorname{div} \mathbb{\mu}\boldsymbol{h} = 0, \tag{8.18}$$

plus boundary conditions (5.8), (5.9) and (7.10): $\boldsymbol{e} \times \boldsymbol{n}_{|\Gamma} = 0$, $\mathbb{\mu}\boldsymbol{h} \cdot \boldsymbol{n}_{|\Gamma} = 0$ and $\mathbb{e}^{-1}(\mathbf{curl}\,\boldsymbol{h} - \boldsymbol{j}) \times \boldsymbol{n}_{|\Gamma} = 0$. The unknown is the couple of electromagnetic fields $(\boldsymbol{e}, \boldsymbol{h}) \in \boldsymbol{H}(\mathbf{curl}, \Omega)^2$. In the second-order equations (8.15)-(8.18), the fields $\boldsymbol{e}$ and $\boldsymbol{h}$ are decoupled. So, one can solve a Helmholtz-like problem in $\boldsymbol{e}$ and a Helmholtz-like problem in $\boldsymbol{h}$, and finally check that any solution of these two problems leads to a solution of the first-order system. For this last part, we apply the same process as in §8.2.

Magnetic Helmholtz-like problem

Let us begin with the problem in the magnetic field $\boldsymbol{h}$, which is governed by:

$$\begin{cases} \textit{Find } \boldsymbol{h} \in \boldsymbol{H}(\mathbf{curl}, \Omega) \textit{ such that} \\ -\omega^2 \mathbb{\mu}\boldsymbol{h} + \mathbf{curl}(\mathbb{e}^{-1}(\mathbf{curl}\,\boldsymbol{h} - \boldsymbol{j})) = 0 \text{ in } \Omega, \\ \operatorname{div} \mathbb{\mu}\boldsymbol{h} = 0 \text{ in } \Omega\,; \\ \mathbb{\mu}\boldsymbol{h} \cdot \boldsymbol{n} = 0 \text{ on } \Gamma, \\ \mathbb{e}^{-1}(\mathbf{curl}\,\boldsymbol{h} - \boldsymbol{j}) \times \boldsymbol{n} = 0 \text{ on } \Gamma. \end{cases} \tag{8.19}$$

The magnetic field $\boldsymbol{h}$ belongs to the function space $\boldsymbol{K}_T(\Omega; \mathbb{\mu})$ and one can again build an equivalent variational formulation, as in §8.2.2:

$$\begin{cases} \textit{Find } \boldsymbol{h} \in \boldsymbol{K}_T(\Omega; \mathbb{\mu}) \textit{ such that} \\ \forall \boldsymbol{v} \in \boldsymbol{K}_T(\Omega; \mathbb{\mu}),\ -\omega^2(\mathbb{\mu}\boldsymbol{h}|\boldsymbol{v}) + (\mathbb{e}^{-1}\,\mathbf{curl}\,\boldsymbol{h}|\,\mathbf{curl}\,\boldsymbol{v}) = (\mathbb{e}^{-1}\boldsymbol{j}|\,\mathbf{curl}\,\boldsymbol{v}). \end{cases} \tag{8.20}$$

To solve the Helmholtz-like problem (8.20), we propose two approaches below. Both of them rely on knowledge of a Hilbert basis of $\boldsymbol{K}_T(\Omega; \mathbb{\mu})$, cf. Theorem 8.2.8. The first one proposes an explicit solution, while the second one allows us to solve the problem variationally. Let $(\mathtt{h}_m)_{m\geq 0}$ denote the Hilbert basis[1] of $\boldsymbol{K}_T(\Omega; \mathbb{\mu})$ defined by $\mathtt{h}_m := (\lambda_m + 1)^{-1/2}\boldsymbol{h}_m$. Note that it is also an orthogonal basis for $\boldsymbol{H}_0(\operatorname{div} \mathbb{\mu}0, \Omega)$, endowed with $(\boldsymbol{v}, \boldsymbol{w}) \mapsto (\mathbb{\mu}\boldsymbol{v}|\boldsymbol{w})$.
The variational formulation (8.20) is then equivalent to

$$\begin{cases} \textit{Find } \boldsymbol{h} \in \boldsymbol{K}_T(\Omega; \mathbb{\mu}) \textit{ such that} \\ \forall m \geq 0,\ -\omega^2(\mathbb{\mu}\boldsymbol{h}|\mathtt{h}_m) + (\mathbb{e}^{-1}\,\mathbf{curl}\,\boldsymbol{h}|\,\mathbf{curl}\,\mathtt{h}_m) = (\mathbb{e}^{-1}\boldsymbol{j}|\,\mathbf{curl}\,\mathtt{h}_m). \end{cases} \tag{8.21}$$

Considering now $\boldsymbol{h} := \sum_{m\geq 0} \alpha_m \mathtt{h}_m$ with

[1] Here, we include – if they exist – magnetic eigenmodes with 0 eigenvalue, for which $\mathbf{curl}\,\boldsymbol{h}_m = 0$. There is, at most, a finite number of them. We keep the notation $(\lambda_m)_{m\geq 0}$ for the eigenvalues.

$$\forall m \geq 0,\ \alpha_m := \frac{1+\lambda_m}{\lambda_m - \omega^2}(\mathbb{c}^{-1}\boldsymbol{j}|\,\mathbf{curl}\,\mathtt{h}_m),$$

one finds, by inspection, that $\boldsymbol{h}$ solves (8.21); if $\lambda_m = 0$, notice that one automatically has $\alpha_m = 0$. Moreover, $\boldsymbol{h}$ is the unique solution to (8.21). To prove well-posedness, one relies on the following observation: discarding the modes for which $\lambda_m = 0$, we remark that $((1+1/\lambda_m)^{1/2}\,\mathbf{curl}\,\mathtt{h}_m)_m$ is an orthonormal family in $\boldsymbol{L}^2(\Omega)$ endowed with $(\mathbb{c}^{-1}\cdot|\cdot)$, hence

$$\sum_m \left|(\mathbb{c}^{-1}\boldsymbol{j}|(1+1/\lambda_m)^{1/2}\,\mathbf{curl}\,\mathtt{h}_m)\right|^2 \leq \|\mathbb{c}^{-1/2}\boldsymbol{j}\|^2.$$

Then, one finds

$$\begin{aligned}|\alpha_m| &= \frac{(\lambda_m^2+\lambda_m)^{1/2}}{|\lambda_m-\omega^2|}\left|(\mathbb{c}^{-1}\boldsymbol{j}|(1+1/\lambda_m)^{1/2}\,\mathbf{curl}\,\mathtt{h}_m)\right| \\ &\leq \sup_{\ell\geq 0}\left(\frac{(\lambda_\ell^2+\lambda_\ell)^{1/2}}{|\lambda_\ell-\omega^2|}\right)\left|(\mathbb{c}^{-1}\boldsymbol{j}|(1+1/\lambda_m)^{1/2}\,\mathbf{curl}\,\mathtt{h}_m)\right|,\end{aligned}$$

so that $\quad \|\boldsymbol{h}\|_{\boldsymbol{K}_T(\Omega;\mathbb{p})} \leq \sup_{\ell\geq 0}\left(\frac{(\lambda_\ell^2+\lambda_\ell)^{1/2}}{|\lambda_\ell-\omega^2|}\right)\|\mathbb{c}^{-1/2}\boldsymbol{j}\|.$

Since $\omega^2 \notin \{\lambda_m\ :\ \lambda_m \geq 0\}$ and $\lim_{m\to\infty}\lambda_m = +\infty$, one concludes that $\sup_{\ell\geq 0}\left((\lambda_\ell^2+\lambda_\ell)^{1/2}/|\lambda_\ell-\omega^2|\right) < \infty$.
On the other hand, one can start from the variational formulation (8.20) and use the $\mathbb{T}$-coercivity result of Proposition 4.2.14. To that aim, let us introduce a suitable operator T_H of $\mathcal{L}(\boldsymbol{K}_T(\Omega;\mathbb{p}))$. Since the Hilbert basis $(\mathtt{h}_m)_{m\geq 0}$ is ordered by increasing values of λ_m, there exists an index $M \geq -1$ such that $\lambda_m < \omega^2$ if, and only if, $m \leq M$. Then, T_H is defined by

$$T_H\mathtt{h}_m = \begin{cases} -\mathtt{h}_m & \text{if } \lambda_m < \omega^2, \\ +\mathtt{h}_m & \text{if } \lambda_m > \omega^2. \end{cases}$$

By construction, $T_H^2 = I_{\boldsymbol{K}_T(\Omega;\mathbb{p})}$, hence it is bijective. To prove the well-posedness of the variational formulation (8.20), let us check that the sesquilinear form $a_H\colon (\boldsymbol{v},\boldsymbol{w}) \mapsto -\omega^2(\mathbb{p}\boldsymbol{v}|\boldsymbol{w}) + (\mathbb{c}^{-1}\,\mathbf{curl}\,\boldsymbol{v}|\,\mathbf{curl}\,\boldsymbol{w})$ is $\mathbb{T}$-coercive on $\boldsymbol{K}_T(\Omega;\mathbb{p})$. Given $\boldsymbol{v} \in \boldsymbol{K}_T(\Omega;\mathbb{p})$, it can be decomposed as $\boldsymbol{v} = \sum_{m\geq 0} v_m\mathtt{h}_m$ and, by orthogonality,

$$\begin{aligned}a_H(\boldsymbol{v},T_H\boldsymbol{v}) &= \sum_{m\geq 0}|v_m|^2\left(-\omega^2(\mathbb{p}\mathtt{h}_m|T_H\mathtt{h}_m) + (\mathbb{c}^{-1}\,\mathbf{curl}\,\mathtt{h}_m|\,\mathbf{curl}(T_H\mathtt{h}_m))\right) \\ &= \sum_{M\geq m}|v_m|^2\left(\frac{\omega^2-\lambda_m}{1+\lambda_m}\right) + \sum_{m>M}|v_m|^2\left(\frac{-\omega^2+\lambda_m}{1+\lambda_m}\right) \\ &\geq \inf_{\ell\geq 0}\left(\frac{|\lambda_\ell-\omega^2|}{1+\lambda_\ell}\right)\sum_{m\geq 0}|v_m|^2 = \inf_{\ell\geq 0}\left(\frac{|\lambda_\ell-\omega^2|}{1+\lambda_\ell}\right)\|\boldsymbol{v}\|^2_{\boldsymbol{K}_T(\Omega;\mathbb{p})}.\end{aligned}$$

Since $\omega^2 \notin \{\lambda_m \ : \ \lambda_m \geq 0\}$ and $\lim_{m\to\infty} \lambda_m = +\infty$, one concludes that $\inf_{\ell\geq 0} \big(|\lambda_\ell - \omega^2|/(1+\lambda_\ell)\big) > 0$, and so the sesquilinear form a_H is $\mathbb{T}$-coercive. Hence, the variational formulation (8.20) is well-posed.
Both results are summarized below.

Theorem 8.3.1 *Let Ω be a domain encased in a perfect conductor, such that* $\mathbf{(Top)}_{I=0}$ *or* $\mathbf{(Top)}_{I>0}$ *is fulfilled, and let $\mathbb{c}, \mathbb{\mu}$ be tensor fields that fulfill assumption (5.10). Provided that ω^2 does not belong to the discrete set of eigenvalues of the corresponding eigenproblem, the magnetic Helmholtz-like problem is well-posed.*

Electric Helmholtz-like problem

Let us continue with the Helmholtz-like problem in the electric field $\boldsymbol{e}$. The unknown $\boldsymbol{e}$ is governed by:

$$\begin{cases} \textit{Find } \boldsymbol{e} \in \boldsymbol{H}(\mathbf{curl}, \Omega) \textit{ such that} \\ -\omega^2 \mathbb{c}\boldsymbol{e} + \mathbf{curl}(\mathbb{\mu}^{-1}\,\mathbf{curl}\,\boldsymbol{e}) = \imath\omega\boldsymbol{j} \text{ in } \Omega, \\ \operatorname{div} \mathbb{c}\boldsymbol{e} = r \text{ in } \Omega, \\ \boldsymbol{e} \times \boldsymbol{n} = 0 \text{ on } \Gamma. \end{cases} \tag{8.22}$$

Because one always has $\omega \neq 0$, note that the second equation $\operatorname{div} \mathbb{c}\boldsymbol{e} = r$ in Ω is redundant, as it can be derived from the first one with the help of the charge conservation equation. The electric field belongs to the function space $\boldsymbol{H}_0(\mathbf{curl}, \Omega)$. One can build an equivalent variational formulation in this space, namely

$$\begin{cases} \textit{Find } \boldsymbol{e} \in \boldsymbol{H}_0(\mathbf{curl}, \Omega) \textit{ such that} \\ \forall \boldsymbol{v} \in \boldsymbol{H}_0(\mathbf{curl}, \Omega),\ -\omega^2(\mathbb{c}\boldsymbol{e}|\boldsymbol{v}) + (\mathbb{\mu}^{-1}\,\mathbf{curl}\,\boldsymbol{e}|\,\mathbf{curl}\,\boldsymbol{v}) = \imath\omega(\boldsymbol{j}|\boldsymbol{v}). \end{cases} \tag{8.23}$$

Indeed, it is clear by integration by parts that if $\boldsymbol{e}$ is governed by (8.22), then it solves the variational formulation (8.23). On the other hand, consider $\boldsymbol{e}$ that solves (8.23). One obviously has $\boldsymbol{e} \in \boldsymbol{H}(\mathbf{curl}, \Omega)$ and $\boldsymbol{e} \times \boldsymbol{n}_{|\Gamma} = 0$. Also, taking $\boldsymbol{v} \in \boldsymbol{D}(\Omega)$ as a test function in (8.23), one finds that $-\omega^2\mathbb{c}\boldsymbol{e} + \mathbf{curl}(\mathbb{\mu}^{-1}\,\mathbf{curl}\,\boldsymbol{e}) = \imath\omega\boldsymbol{j}$ in $\boldsymbol{D}'(\Omega)$, so one recovers the first equation of (8.22). Last, using $\boldsymbol{v} = \mathbf{grad}\, v$ with $v \in H_0^1(\Omega)$ as a test function, it now follows that

$$\begin{aligned} \omega^2 \langle \operatorname{div} \mathbb{c}\boldsymbol{e}, v\rangle_{H_0^1(\Omega)} &= -\omega^2(\mathbb{c}\boldsymbol{e}|\,\mathbf{grad}\, v) \overset{(8.23)}{=} \imath\omega(\boldsymbol{j}|\,\mathbf{grad}\, v) \\ &= -\imath\omega\langle \operatorname{div} \boldsymbol{j}, v\rangle_{H_0^1(\Omega)} = \omega^2\langle r, v\rangle_{H_0^1(\Omega)}, \end{aligned}$$

where we used the charge conservation equation for the last equality. Hence, we derive the second equation of (8.22) in $H^{-1}(\Omega)$ because $\omega \neq 0$.
In the sequel, we endow the space of electric fields $\boldsymbol{H}_0(\mathbf{curl}, \Omega)$ with the scalar product $(\boldsymbol{v}, \boldsymbol{w})_{\varepsilon,\mu^{-1}\,\mathbf{curl}} = (\mathbb{c}\boldsymbol{v}|\boldsymbol{w}) + (\mathbb{\mu}^{-1}\,\mathbf{curl}\,\boldsymbol{v}|\,\mathbf{curl}\,\boldsymbol{w})$. To solve the electric Helmholtz-like problem (8.23), we also propose two approaches, which now rely on knowledge of an *ad hoc* Hilbert basis of $\boldsymbol{H}_0(\mathbf{curl}, \Omega)$. To that aim, we recall that one has the Helmholtz decomposition (6.16):

$$\boldsymbol{H}_0(\mathbf{curl},\Omega) = \mathbf{grad}[H_0^1(\Omega)] \overset{\perp_{\varepsilon,\mu^{-1}}}{\oplus} \boldsymbol{K}_N(\Omega;\mathbb{e}).$$

According to the study of the electric eigenproblem, we already have at hand a Hilbert basis of $\boldsymbol{K}_N(\Omega;\mathbb{e})$, here considered as a (closed) vector subspace of $\boldsymbol{H}_0(\mathbf{curl},\Omega)$. Indeed, the scalar products are identical.
On the other hand, the scalar product restricted to $\mathbf{grad}[H_0^1(\Omega)]$ writes $(\boldsymbol{v},\boldsymbol{w}) \mapsto (\mathbb{e}\boldsymbol{v}|\boldsymbol{w})$. Now, we remark that $(v,w) \mapsto (\mathbb{e}\,\mathbf{grad}\,v|\,\mathbf{grad}\,w)$ is a scalar product of $H_0^1(\Omega)$. Based on this observation, we can build a Hilbert basis of $H_0^1(\Omega)$ that yields a Hilbert basis for $\mathbf{grad}[H_0^1(\Omega)]$, as follows. Choose $\eta \in L^\infty(\Omega)$ such that $\eta \geq \eta_-$ almost everywhere with $\eta_- > 0$, and solve

$$\begin{cases} \textit{Find } (v,\lambda) \in (H_0^1(\Omega)\setminus\{0\}) \times \mathbb{C} \textit{ such that} \\ \forall w \in H_0^1(\Omega),\ (\mathbb{e}\,\mathbf{grad}\,v|\,\mathbf{grad}\,w) = \lambda\,(\eta v|w). \end{cases} \tag{8.24}$$

This scalar eigenproblem with Dirichlet boundary condition can be solved with the help of Theorem 4.5.11 for $V = H_0^1(\Omega)$ and $H = L^2(\Omega)$, respectively endowed with the scalar products $(\cdot,\cdot)_V = (\mathbb{e}\,\mathbf{grad}\,\cdot|\,\mathbf{grad}\,\cdot)$ and $(\cdot,\cdot)_H = (\eta\cdot|\cdot)$.

Theorem 8.3.2 *Let Ω be a domain. Let $\mathbb{e}$ be a tensor field that fulfills assumption (5.10) and let $\eta \in L^\infty(\Omega)$ be such that $\eta \geq \eta_- > 0$ almost everywhere. Then, there exists a Hilbert basis $(v_m)_{m\geq 0}$ of $L^2(\Omega)$ made of eigenvectors of Problem (8.24) with corresponding strictly positive eigenvalues $(\lambda_m^D)_{m\geq 0}$, such that $((\lambda_m^D)^{-1/2}v_m)_{m\geq 0}$ is a Hilbert basis for $H_0^1(\Omega)$. Finally, the eigenvalues are all of finite multiplicities, and they can be reordered as an increasing sequence of real numbers whose limit is $+\infty$.*

We denote by $(\boldsymbol{e}_m)_{m\geq 0}$ the Hilbert basis of $\boldsymbol{H}(\operatorname{div}\mathbb{e}0,\Omega)$ made of eigenvectors of Problem (8.7), with associated eigenvalues $(\lambda_m)_{m\geq 0}$ (see Theorem 8.2.4). Now, let $(\mathsf{e}_m)_{m\geq 0}$ denote the Hilbert basis of $\boldsymbol{K}_N(\Omega;\mathbb{e})$ defined by $\mathsf{e}_m := (\lambda_m+1)^{-1/2}\boldsymbol{e}_m$. Then, let $(\mathsf{e}_m)_{m<0}$ denote the Hilbert basis of $\mathbf{grad}[H_0^1(\Omega)]$ defined by $\mathsf{e}_m := (\lambda_{-(1+m)}^D)^{-1/2}\,\mathbf{grad}\,v_{-(1+m)}$.
Observe that $(\mathsf{e}_m)_{m\in\mathbb{Z}}$ is a Hilbert basis for $\boldsymbol{H}_0(\mathbf{curl},\Omega)$ with,

$$\begin{aligned} &\forall m \in \mathbb{Z},\ \forall \boldsymbol{v} \in \boldsymbol{H}_0(\mathbf{curl},\Omega), \\ &(\mathbb{e}\mathsf{e}_m|\boldsymbol{v}) + (\mathbb{\mu}^{-1}\,\mathbf{curl}\,\mathsf{e}_m|\,\mathbf{curl}\,\boldsymbol{v}) = (\lambda_m+1)^{1/2}(\mathbb{e}\mathsf{e}_m|\boldsymbol{v}), \end{aligned}$$

where, by construction, $\lambda_m = 0$ for all $m < 0$. We can now carry on as before. In the electric case, the variational formulation (8.23) is equivalent to

$$\begin{cases} \textit{Find } \boldsymbol{e} \in \boldsymbol{H}_0(\mathbf{curl},\Omega) \textit{ such that} \\ \forall m \in \mathbb{Z},\ -\omega^2(\mathbb{e}\boldsymbol{e}|\mathsf{e}_m) + (\mathbb{\mu}^{-1}\,\mathbf{curl}\,\boldsymbol{e}|\,\mathbf{curl}\,\mathsf{e}_m) = \imath\omega(\boldsymbol{j}|\mathsf{e}_m). \end{cases} \tag{8.25}$$

Let $\boldsymbol{e} := \sum_{m\in\mathbb{Z}} \beta_m \mathsf{e}_m$ with

$$\forall m \in \mathbb{Z},\ \beta_m := \imath\omega\frac{1+\lambda_m}{\lambda_m-\omega^2}(\boldsymbol{j}|\mathsf{e}_m).$$

By inspection, $\boldsymbol{e}$ solves (8.25) and, what is more, it is obviously its only solution. Also,[2]

$$\begin{aligned} |\beta_m| &= \omega \frac{\lambda_m + 1}{|\lambda_m - \omega^2|} \, |(\boldsymbol{j}|\mathsf{e}_m)| \\ &\leq \omega \sup_{\ell \in \mathbb{Z}} \left(\frac{(\lambda_\ell + 1)^{1/2}}{|\lambda_\ell - \omega^2|} \right) (\lambda_m + 1)^{1/2} \, |(\boldsymbol{j}|\mathsf{e}_m)| \,, \\ \text{so} \quad \|\boldsymbol{e}\|_{\boldsymbol{H}_0(\mathbf{curl},\Omega)} &\leq \omega \sup_{\ell \in \mathbb{Z}} \left(\frac{(\lambda_\ell + 1)^{1/2}}{|\lambda_\ell - \omega^2|} \right) \|\mathbb{c}^{-1/2} \boldsymbol{j}\|. \end{aligned}$$

Again, $\omega^2 \notin \{\lambda_m \ : \ m \in \mathbb{Z}\}$, $\lambda_m = 0$ for all $m < 0$ and $\lim_{m \to \infty} \lambda_m = +\infty$, hence $\sup_{\ell \in \mathbb{Z}} \left((\lambda_\ell + 1)^{1/2} / |\lambda_\ell - \omega^2| \right) < \infty$.
On the other hand, one can use the $\mathbb{T}$-coercivity theory once more. It is completely similar to the magnetic case. The operator T_E of $\mathcal{L}(\boldsymbol{H}_0(\mathbf{curl}, \Omega))$, defined by

$$T_E \mathsf{e}_m = \begin{cases} -\mathsf{e}_m & \text{if } \lambda_m < \omega^2, \\ +\mathsf{e}_m & \text{if } \lambda_m > \omega^2, \end{cases}$$

is such that $T_E^2 = I_{\boldsymbol{H}_0(\mathbf{curl},\Omega)}$, hence it is bijective. Now, let $M \geq -1$ be the index such that $\lambda_m < \omega^2$ if, and only if, $m \leq M$. To prove the well-posedness of the variational formulation (8.23), let us check now that the form a_E: $(\boldsymbol{v}, \boldsymbol{w}) \mapsto -\omega^2 (\mathbb{c}\boldsymbol{v}|\boldsymbol{w}) + (\mathbb{\mu}^{-1} \, \mathbf{curl}\, \boldsymbol{v} | \, \mathbf{curl}\, \boldsymbol{w})$ is $\mathbb{T}$-coercive on $\boldsymbol{H}_0(\mathbf{curl}, \Omega)$. Let $\boldsymbol{v} \in \boldsymbol{H}_0(\mathbf{curl}, \Omega)$ be decomposed as $\boldsymbol{v} = \sum_{m \in \mathbb{Z}} v_m \mathsf{e}_m$; by orthogonality,

$$\begin{aligned} a_E(\boldsymbol{v}, T_E \boldsymbol{v}) &= \sum_{m \in \mathbb{Z}} |v_m|^2 \left(-\omega^2 (\mathbb{c}\mathsf{e}_m | T_E \mathsf{e}_m) + (\mathbb{\mu}^{-1} \, \mathbf{curl}\, \mathsf{e}_m | \, \mathbf{curl}(T_E \mathsf{e}_m)) \right) \\ &\geq \inf_{\ell \in \mathbb{Z}} \left(\frac{|\lambda_\ell - \omega^2|}{1 + \lambda_\ell} \right) \sum_{m \in \mathbb{Z}} |v_m|^2 = \inf_{\ell \in \mathbb{Z}} \left(\frac{|\lambda_\ell - \omega^2|}{1 + \lambda_\ell} \right) \|\boldsymbol{v}\|^2_{\boldsymbol{H}(\mathbf{curl},\Omega)}. \end{aligned}$$

Since $\omega^2 \notin \{\lambda_m \ : \ m \in \mathbb{Z}\}$, $\lambda_m = 0$ for all $m < 0$ and $\lim_{m \to \infty} \lambda_m = +\infty$, one has $\inf_{\ell \in \mathbb{Z}} \left(|\lambda_\ell - \omega^2| / (1 + \lambda_\ell) \right) > 0$, and so the sesquilinear form a_E is $\mathbb{T}$-coercive. Hence, the variational formulation (8.23) is well-posed.
The results are summarized below.

Theorem 8.3.3 *Let Ω be a domain encased in a perfect conductor, such that* $\mathbf{(Top)}_{I=0}$ *or* $\mathbf{(Top)}_{I>0}$ *is fulfilled, and let $\mathbb{c}, \mathbb{\mu}$ be tensor fields that fulfill assumption (5.10). Provided that ω^2 does not belong to the discrete set of eigenvalues of the corresponding eigenproblem, the electric Helmholtz-like problem is well-posed.*

[2] Choosing $\boldsymbol{e}_m := \mathsf{e}_m$ for $m < 0$ yields a Hilbert basis of $\boldsymbol{L}^2(\Omega)$ endowed with the scalar product $(\mathbb{c} \cdot |\cdot)$, namely $(\boldsymbol{e}_m)_{m \in \mathbb{Z}}$. Given $\boldsymbol{v} \in \boldsymbol{L}^2(\Omega)$, it holds that $(\mathbb{c}\boldsymbol{v}|\boldsymbol{v}) = \sum_{m \in \mathbb{Z}} |(\mathbb{c}\boldsymbol{v}|\boldsymbol{e}_m)|^2$. It follows that

$$\sum_{m \in \mathbb{Z}} (\lambda_m + 1) |(\boldsymbol{j}|\mathsf{e}_m)|^2 = \sum_{m \in \mathbb{Z}} |(\boldsymbol{j}|\boldsymbol{e}_m)|^2 = (\boldsymbol{j}|\mathbb{c}^{-1}\boldsymbol{j}) = \|\mathbb{c}^{-1/2}\boldsymbol{j}\|^2.$$

Remark 8.3.4 *By analogy, it would be possible to solve the magnetic Helmholtz-like problem in $\boldsymbol{H}(\mathbf{curl}, \Omega)$. For that, we recall that, if we endow $\boldsymbol{H}(\mathbf{curl}, \Omega)$ with the scalar product $(\boldsymbol{v}, \boldsymbol{w}) \mapsto (\mathbb{\mu}\boldsymbol{v}|\boldsymbol{w}) + (\mathbb{\varepsilon}^{-1}\,\mathbf{curl}\,\boldsymbol{v}|\,\mathbf{curl}\,\boldsymbol{w})$, one has the Helmholtz decomposition (6.37):*

$$\boldsymbol{H}(\mathbf{curl}, \Omega) = \mathbf{grad}[H^1_{zmv}(\Omega)] \overset{\perp_{\mu,\varepsilon^{-1}}}{\oplus} \boldsymbol{K}_T(\Omega; \mathbb{\mu}).$$

One then builds a Hilbert basis for the function space $\mathbf{grad}[H^1_{zmv}(\Omega)]$ by solving a scalar eigenproblem in $H^1_{zmv}(\Omega)$, with Neumann boundary condition, namely $(\mathtt{h}_m)_{m<0}$, associated with $\lambda_m = 0$ for all $m < 0$. The process can be completed either through an explicit construction, or through the $\mathbb{T}$-coercivity theory applied to the variational formulation in $\boldsymbol{H}(\mathbf{curl}, \Omega)$.

Solving the first-order problem

Obtaining a solution is very straightforward (recall that $\omega \neq 0$). For instance:

- given $\boldsymbol{h}$ that solves (8.19), the couple $(\imath\omega^{-1}\mathbb{\varepsilon}^{-1}\,\mathbf{curl}\,\boldsymbol{h}, \boldsymbol{h})$ solves the first-order problem (8.11)-(8.14);
- given $\boldsymbol{e}$ that solves (8.22), the couple $(\boldsymbol{e}, -\imath\omega^{-1}\mathbb{\mu}^{-1}\,\mathbf{curl}\,\boldsymbol{e})$ solves the first-order problem (8.11)-(8.14).

8.3.2 Inside a conductor

The medium in Ω is now assumed to be a conductor with a conductivity tensor $\mathbb{\sigma}$. For short, we say that Ω is a conductor domain. It is still encased in a perfect conductor, leading to another cavity problem. The behavior of the fields is governed, as previously, by (8.11)-(8.14), with $\mathbb{\varepsilon}$ replaced with $\mathbb{\varepsilon} + \imath\mathbb{\sigma}\omega^{-1}$, plus boundary conditions (5.8) and (5.9). We handle the electric case, and the magnetic case can be treated similarly. The electric field is governed by the variational formulation:

$$\begin{cases} \textit{Find } \boldsymbol{e} \in \boldsymbol{H}_0(\mathbf{curl}, \Omega) \textit{ such that} \\ \forall \boldsymbol{v} \in \boldsymbol{H}_0(\mathbf{curl}, \Omega),\ -\omega^2(\mathbb{\varepsilon}\boldsymbol{e}|\boldsymbol{v}) - \imath\omega(\mathbb{\sigma}\boldsymbol{e}|\boldsymbol{v}) \\ \qquad\qquad\qquad\qquad + (\mathbb{\mu}^{-1}\,\mathbf{curl}\,\boldsymbol{e}|\,\mathbf{curl}\,\boldsymbol{v}) = \imath\omega(\boldsymbol{j}_{ext}|\boldsymbol{v}), \end{cases} \tag{8.26}$$

with $\boldsymbol{j}_{ext}$ the externally imposed current density. We assume that $\mathbb{\varepsilon}$, $\mathbb{\mu}$ and $\mathbb{\sigma}$ are tensor fields that fulfill assumption (5.10). In this setting, it is possible to verify that the sesquilinear form

$$a_\sigma\ :\ (\boldsymbol{v}, \boldsymbol{w}) \mapsto -\omega^2(\mathbb{\varepsilon}\boldsymbol{v}|\boldsymbol{w}) - \imath\omega(\mathbb{\sigma}\boldsymbol{v}|\boldsymbol{w}) + (\mathbb{\mu}^{-1}\,\mathbf{curl}\,\boldsymbol{v}|\,\mathbf{curl}\,\boldsymbol{w})$$

is coercive on $\boldsymbol{H}_0(\mathbf{curl}, \Omega)$ in the sense of Definition 4.2.6. Given $\boldsymbol{v} \in \boldsymbol{H}_0(\mathbf{curl}, \Omega)$, let $\boldsymbol{c} = \mathbf{curl}\,\boldsymbol{v}$.

$$|a_\sigma(\boldsymbol{v}, \boldsymbol{v})|^2 = (-\omega^2\|\mathbb{\varepsilon}^{1/2}\boldsymbol{v}\|^2 + \|\mathbb{\mu}^{-1/2}\boldsymbol{c}\|^2)^2 + \omega^2\|\mathbb{\sigma}^{1/2}\boldsymbol{v}\|^4$$

$$= \omega^4 \|\mathbb{c}^{1/2}\boldsymbol{v}\|^4 + \|\mathbb{\mu}^{-1/2}\boldsymbol{c}\|^4 - 2\omega^2 \|\mathbb{c}^{1/2}\boldsymbol{v}\|^2 \, \|\mathbb{\mu}^{-1/2}\boldsymbol{c}\|^2 + \omega^2 \|\mathbb{\sigma}^{1/2}\boldsymbol{v}\|^4$$
$$\geq (\omega^4 - \omega^2\eta)\|\mathbb{c}^{1/2}\boldsymbol{v}\|^4 + (1 - \omega^2\eta^{-1})\|\mathbb{\mu}^{-1/2}\boldsymbol{c}\|^4 + \omega^2\|\mathbb{\sigma}^{1/2}\boldsymbol{v}\|^4.$$

The above is true for all $\eta > 0$, thanks to Young's inequality.
According to (5.10), there exists $\beta_\sigma > 0$ such that, for all $\boldsymbol{v} \in \boldsymbol{L}^2(\Omega)$, it holds that $\|\mathbb{\sigma}^{1/2}\boldsymbol{v}\|^4 \geq \beta_\sigma \, \|\mathbb{c}^{1/2}\boldsymbol{v}\|^4$. It follows that

$$|a_\sigma(\boldsymbol{v},\boldsymbol{v})|^2 \geq \omega^2(\omega^2 + \beta_\sigma - \eta)\|\mathbb{c}^{1/2}\boldsymbol{v}\|^4 + (1 - \omega^2\eta^{-1})\|\mathbb{\mu}^{-1/2}\boldsymbol{c}\|^4.$$

Then, one can choose $\eta \in]\omega^2, \omega^2 + \beta_\sigma[$ so that $\gamma_\sigma = \min(\omega^2(\omega^2 + \beta_\sigma - \eta), (1 - \omega^2\eta^{-1})) > 0$, and one concludes that

$$|a_\sigma(\boldsymbol{v},\boldsymbol{v})|^2 \geq \frac{\gamma_\sigma}{2}(\|\mathbb{c}^{1/2}\boldsymbol{v}\|^2 + \|\mathbb{\mu}^{-1/2}\boldsymbol{c}\|^2)^2.$$

In other words, the form a_σ is coercive and the well-posedness of the variational formulation (8.26) is achieved. The result is summarized below.

Theorem 8.3.5 *Let Ω be a conductor domain encased in a perfect conductor, such that* $\mathbf{(Top)}_{I=0}$ *or* $\mathbf{(Top)}_{I>0}$ *is fulfilled, and let $\mathbb{c}, \mathbb{\mu}, \mathbb{\sigma}$ be tensor fields that fulfill assumption (5.10). The electric Helmholtz-like problem in the conductor domain is well-posed.*

To conclude, we recall two simple results. Let the tensor fields $\mathbb{c}, \mathbb{\mu}$ be fixed.
One can easily check that the (best) coercivity constant for $a_\sigma(\cdot,\cdot)$ goes to 0 when $\mathbb{\sigma}$ goes to 0 in $\mathbb{L}^\infty(\Omega)$, that is, when the upper bound σ_+ goes to 0, cf. (5.10). Indeed, given $q \in H_0^1(\Omega) \setminus \{0\}$, one has $a_0(\mathbf{grad}\, q, \mathbf{grad}\, q) < 0$, whereas one can choose e_m so that $\lambda_m > \omega^2$, and $a_0(\mathsf{e}_m, \mathsf{e}_m) > 0$. By continuity, there exists $\boldsymbol{v} \neq 0$ on the line segment $[\mathbf{grad}\, q, \mathsf{e}_m]$ such that $a_0(\boldsymbol{v},\boldsymbol{v}) = 0$. Hence,

$$|a_\sigma(\boldsymbol{v},\boldsymbol{v})| = \omega \, \|\mathbb{\sigma}^{1/2}\boldsymbol{v}\|^2 \leq \frac{\sigma_+}{\varepsilon_-}\|\mathbb{c}^{1/2}\boldsymbol{v}\|^2.$$

So, the (best) coercivity constant goes to 0 when the medium becomes less and less conducting.
More to the point, set $\mathbb{\sigma} = \eta\, \mathbb{\sigma}_1$, where η is a real, strictly positive number that goes to 0, and $\mathbb{\sigma}_1$ a tensor field that fulfills assumption (5.10). Let us assume that there exists m_0 such that $\omega^2 = \lambda_{m_0}$, hence $(\mathbb{\mu}^{-1}\,\mathbf{curl}\,\mathsf{e}_{m_0} \mid \mathbf{curl}\,\boldsymbol{v}) = (\mathbb{c}\mathsf{e}_{m_0} \mid \boldsymbol{v})$ for all $\boldsymbol{v} \in \boldsymbol{H}_0(\mathbf{curl}, \Omega)$, and choose the data $\boldsymbol{j}_{ext}$ such that $(\boldsymbol{j}_{ext}|\mathsf{e}_{m_0}) \neq 0$. Let $\boldsymbol{e}_\eta$ denote the solution to (8.26) for a given η. Then, one has

$$\lim_{\eta \to 0^+} \|\mathbb{\sigma}_1 \boldsymbol{e}_\eta\| = +\infty.$$

Indeed, using $\boldsymbol{v} = \mathsf{e}_{m_0}$ in (8.26) yields $(\mathbb{\sigma}_1\boldsymbol{e}_\eta|\mathsf{e}_{m_0}) = -\eta^{-1}(\boldsymbol{j}_{ext}|\mathsf{e}_{m_0})$. By the Cauchy-Schwarz inequality, it holds that

$$\|\mathbb{\sigma}_1\boldsymbol{e}_\eta\| \geq \frac{1}{\|\mathsf{e}_{m_0}\|}|(\mathbb{\sigma}_1\boldsymbol{e}_\eta|\mathsf{e}_{m_0})| = \eta^{-1}\frac{|(\boldsymbol{j}_{ext}|\mathsf{e}_{m_0})|}{\|\mathsf{e}_{m_0}\|} \to +\infty.$$

Remark 8.3.6 *The same conclusions can be drawn inside a Lorentz material with damping, i.e., with $\gamma_L > 0$ in the definition of the electric permittivity $\mathbb{e}_L$, cf. §1.2.4.*

8.3.3 Diffraction problem

Following §1.6.1, we consider here a diffraction problem around a bounded object (or scattering from a bounded obstacle) $\mathtt{O}$ with connected boundary, which we assume to be perfectly conducting. One adjusts the exterior domain $\mathbb{R}^3 \setminus \overline{\mathtt{O}}$ by *truncation*, which results in a bounded (computational) domain, called Ω. Its boundary Γ is split into two parts:

- a "physical" part $\Gamma_P = \partial\mathtt{O}$ with a perfect conductor boundary condition;
- an "artificial" part, called Γ_A, on which an ABC is imposed, namely an *impedance* boundary condition, which writes

$$\boldsymbol{E} \times \boldsymbol{n} + \mathtt{Z}(\boldsymbol{H}_\top) = 0 \text{ on } \Gamma_A\,, \tag{8.27}$$

  for some operator $\mathtt{Z} \in \mathcal{L}(\boldsymbol{H}_\perp^{-1/2}(\mathrm{curl}_\Gamma, \Gamma_A), \boldsymbol{H}_\parallel^{-1/2}(\mathrm{div}_\Gamma, \Gamma_A))$. A priori, $\mathtt{Z} \neq 0$, otherwise (8.27) reduces to the perfect conductor boundary condition on Γ_A.

For such problems, the time dependence is known: in $\exp(-\imath\omega t)$, with a given pulsation $\omega > 0$. Staying momentarily in the time domain, we recall that, according to (5.21), the electromagnetic energy W is governed by

$$\frac{dW}{dt}(t) + {}_{\gamma_A}\langle \mathtt{Z}(\boldsymbol{H}_\top), \boldsymbol{H}_\top(t)\rangle_{\pi_A} = -(\boldsymbol{J}(t)|\boldsymbol{E}(t)), \quad t > 0\,.$$

So, to ensure uniqueness, one must have ${}_{\gamma_A}\langle \mathtt{Z}\boldsymbol{v}, \boldsymbol{v}\rangle_{\pi_A} \geq 0$ for all admissible fields $\boldsymbol{v}$.
Let us go back to the frequency/pulsation domain and study the truncated problem in greater detail.
We choose a "simple", yet accurate (see the upcoming §8.5.3), model for the impedance. Namely, the action of $\mathtt{Z}$ amounts to multiplying by a scalar, i.e., a real number Z_0, which is independent of ω. The condition on the uniqueness, plus the fact that $\mathtt{Z} \neq 0$, imposes that $Z_0 > 0$.
Obviously, there is some flexibility in the choice of the artificial boundary Γ_A: below, we choose a sphere $\partial B(0, R)$, with $R > 0$ such that $\overline{\mathtt{O}} \subset B(0, R)$, and define $\Omega := (\mathbb{R}^3 \setminus \overline{\mathtt{O}}) \cap B(0, R)$. More generally, it would be enough that Γ_A be polyhedral with no pathological vertices. Indeed, we remark that

$$\boldsymbol{e} \times \boldsymbol{n}_{|\Gamma_A}, (\boldsymbol{h}_\top)_{|\Gamma_A} \in \boldsymbol{H}_\perp^{-1/2}(\mathrm{curl}_\Gamma, \Gamma_A) \cap \boldsymbol{H}_\parallel^{-1/2}(\mathrm{div}_\Gamma, \Gamma_A).$$

As proven earlier (see Remark 5.1.8), this function space is a subset of $\boldsymbol{L}_t^2(\Gamma_A)$. Hence, the natural function space of electric fields is

$$\boldsymbol{H}^{+}_{0,\Gamma_P}(\mathbf{curl},\Omega) := \{\boldsymbol{f} \in \boldsymbol{H}_{0,\Gamma_P}(\mathbf{curl},\Omega) \ : \ \boldsymbol{f}\times\boldsymbol{n}_{|\Gamma_A} \in \boldsymbol{L}^2_t(\Gamma_A)\}.$$

It is endowed with the scalar product

$$(\boldsymbol{v},\boldsymbol{w}) \mapsto (\mathbb{e}\boldsymbol{v}|\boldsymbol{w}) + (\mathbb{p}^{-1}\,\mathbf{curl}\,\boldsymbol{v}|\,\mathbf{curl}\,\boldsymbol{w}) + (\beta\boldsymbol{v}\times\boldsymbol{n},\boldsymbol{w}\times\boldsymbol{n})_{\boldsymbol{L}^2_t(\Gamma_A)},$$

where $\beta \in L^\infty(\Gamma_A)$, $\beta \geq \beta_0 > 0$ a.e. on Γ_A, and $\mathbb{e}$, $\mathbb{p}$ are tensor fields that fulfill (5.10).

Remark 8.3.7 *The function spaces $\boldsymbol{H}^{+}_{0,\Gamma_P}(\mathbf{curl},\Omega)$ and $\mathcal{V}^{TIP}_E$, cf. §7.2.2, are identical.*

In the sequel, we focus on the problem that involves the electric field, bearing in mind that one can recover the total electromagnetic field as before (and also that one could solve the problem in the magnetic field in a similar fashion). Given $(\boldsymbol{j},r) \in \boldsymbol{L}^2(\Omega)\times H^{-1}(\Omega)$ that fulfills the charge conservation equation $-\imath\omega r + \operatorname{div}\boldsymbol{j} = 0$, the electric field $\boldsymbol{e} \in \boldsymbol{H}^{+}_{0,\Gamma_P}(\mathbf{curl},\Omega)$ is governed by

$$-\omega^2\mathbb{e}\boldsymbol{e} + \mathbf{curl}(\mathbb{p}^{-1}\,\mathbf{curl}\,\boldsymbol{e}) = \imath\omega\boldsymbol{j} \text{ and } \operatorname{div}\mathbb{e}\boldsymbol{e} = r \text{ in } \Omega\,,$$

plus a boundary condition on the artificial boundary Γ_A. On Γ_A, using the trace of Ampère's law, one has: $\boldsymbol{e}\times\boldsymbol{n} = -Z_0\boldsymbol{h}_\top = +\imath Z_0/\omega(\mathbb{p}^{-1}\,\mathbf{curl}\,\boldsymbol{e})_\top$. It can be equivalently written as

$$\nu\boldsymbol{e}\times\boldsymbol{n} = (\mathbb{p}^{-1}\,\mathbf{curl}\,\boldsymbol{e})_\top, \text{ with } \nu := -\imath\frac{\omega}{Z_0}.$$

Observe that $\nu \in \imath\mathbb{R}$, with $\Im\nu < 0$.
On the other hand, let us study the corresponding space of scalar potentials. In the present case, one has $\mathbf{grad}[H^{1+}_{0,\Gamma_P}(\Omega)] \subset \boldsymbol{H}^{+}_{0,\Gamma_P}(\mathbf{curl},\Omega)$, where

$$H^{1+}_{0,\Gamma_P}(\Omega) := \{f \in H^1_{0,\Gamma_P}(\Omega) \ : \ f_{|\Gamma_A} \in H^1(\Gamma_A)\}.$$

According to the Poincaré inequality of Proposition 2.1.66, it can be endowed with the norm $\|\cdot\|_{H^{1+}_{0,\Gamma_P}(\Omega)} := (\|\mathbb{e}^{1/2}\,\mathbf{grad}\,\cdot\|^2 + \|\beta^{1/2}\,\mathbf{grad}_\Gamma\,\cdot\|^2_{\boldsymbol{L}^2_t(\Gamma_A)})^{1/2}$.

Proposition 8.3.8 *It holds that*

$$H^1_0(\Omega) = \textit{closure of } \mathcal{D}(\Omega) \textit{ in } H^{1+}_{0,\Gamma_P}(\Omega).$$

Proof. Let $v \in H^1_0(\Omega)$; there exists a sequence $(v_k)_k \in (\mathcal{D}(\Omega))^{\mathbb{N}}$ that converges to v with respect to the $H^1(\Omega)$-norm. However, for all k,l, $\|v_k - v_l\|_{H^{1+}_{0,\Gamma_P}(\Omega)} = \|\mathbb{e}^{1/2}\,\mathbf{grad}(v_k - v_l)\|$, hence $(v_k)_k$ is a Cauchy sequence in $H^{1+}_{0,\Gamma_P}(\Omega)$. By the uniqueness of the limit, v belongs to the closure of $\mathcal{D}(\Omega)$ in $H^{1+}_{0,\Gamma_P}(\Omega)$.
Conversely, let $v \in H^{1+}_{0,\Gamma_P}(\Omega)$ be the limit of a sequence of elements of $\mathcal{D}(\Omega)$ with respect to $\|\cdot\|_{H^{1+}_{0,\Gamma_P}(\Omega)}$. By construction, it also converges in $H^1(\Omega)$-norm (to the same limit), so $v \in H^1_0(\Omega)$, which yields the result. ■

Next, for $\boldsymbol{v} \in \boldsymbol{H}^{+}_{0,\Gamma_P}(\mathbf{curl}, \Omega)$, one has, by integration by parts,

$$(\mathbf{curl}(\mathbb{\mu}^{-1}\,\mathbf{curl}\,\boldsymbol{e})|\boldsymbol{v}) = (\mathbb{\mu}^{-1}\,\mathbf{curl}\,\boldsymbol{e}|\,\mathbf{curl}\,\boldsymbol{v}) + \nu(\boldsymbol{e}\times\boldsymbol{n}, \boldsymbol{v}\times\boldsymbol{n})_{\boldsymbol{L}^2_t(\Gamma_A)}.$$

As a consequence, for the diffraction problem, the equivalent variational formulation in the electric field is

$$\begin{cases} \textit{Find } \boldsymbol{e} \in \boldsymbol{H}^{+}_{0,\Gamma_P}(\mathbf{curl}, \Omega) \textit{ such that} \\ \forall \boldsymbol{v} \in \boldsymbol{H}^{+}_{0,\Gamma_P}(\mathbf{curl}, \Omega), \\ -\omega^2(\mathbb{\varepsilon}\boldsymbol{e}|\boldsymbol{v}) + (\mathbb{\mu}^{-1}\,\mathbf{curl}\,\boldsymbol{e}|\,\mathbf{curl}\,\boldsymbol{v}) \\ \qquad\qquad\qquad +\nu(\boldsymbol{e}\times\boldsymbol{n}, \boldsymbol{v}\times\boldsymbol{n})_{\boldsymbol{L}^2_t(\Gamma_A)} = \imath\omega(\boldsymbol{j}|\boldsymbol{v}). \end{cases} \tag{8.28}$$

Compared to the variational formulation for the electric Helmholtz-like problem (8.23), there is one addition: one uses $\boldsymbol{v} \in \boldsymbol{C}^{\infty}_{\Gamma_P}(\overline{\Omega})$ to find

$$\forall \boldsymbol{v} \in \boldsymbol{C}^{\infty}_{\Gamma_P}(\overline{\Omega}),\ {}_{\pi_A}\langle \nu\boldsymbol{e}\times\boldsymbol{n} - (\mathbb{\mu}^{-1}\,\mathbf{curl}\,\boldsymbol{e})_{\top}, \boldsymbol{v}\times\boldsymbol{n}\rangle_{\gamma_A} = 0.$$

Thanks to the density of $\boldsymbol{C}^{\infty}_{\Gamma_P}(\overline{\Omega})$ in $\boldsymbol{H}_{0,\Gamma_P}(\mathbf{curl}, \Omega)$ (this is Definition 2.2.27), and hence of the tangential traces on Γ_A of $\boldsymbol{C}^{\infty}_{\Gamma_P}(\overline{\Omega})$ in $\boldsymbol{H}^{-1/2}_{\parallel}(\mathrm{div}_{\Gamma}, \Gamma_A)$ (see Corollary 3.1.23), together with the duality identity of Theorem 3.1.25, we conclude that the boundary condition $\nu\boldsymbol{e}\times\boldsymbol{n} = (\mathbb{\mu}^{-1}\,\mathbf{curl}\,\boldsymbol{e})_{\top}$ holds in $\boldsymbol{H}^{-1/2}_{\perp}(\mathrm{curl}_{\Gamma}, \Gamma_A)$. For illustrative purposes, let us assume that $\nu \in \mathbb{R}$, with $\nu > 0$, a purely "mathematical" setting. The process closely follows the solution of the electric Helmholtz-like problem. Below, we set $\beta(\boldsymbol{x}) = \nu$ for almost all $\boldsymbol{x} \in \Gamma_A$.

Introduce $\boldsymbol{K}_{N,A}(\Omega; \mathbb{\varepsilon}) := \boldsymbol{X}_{N,A}(\Omega; \mathbb{\varepsilon}) \cap \boldsymbol{H}(\mathrm{div}\,\mathbb{\varepsilon}0, \Omega)$. One has the orthogonal decomposition:

$$\boldsymbol{H}^{+}_{0,\Gamma_P}(\mathbf{curl}, \Omega) = \mathbf{grad}[H^1_0(\Omega)] \overset{\perp^{+}_{\varepsilon,\mu^{-1}}}{\oplus} \boldsymbol{K}_{N,A}(\Omega; \mathbb{\varepsilon}). \tag{8.29}$$

Indeed, given $\boldsymbol{v} \in \boldsymbol{H}^{+}_{0,\Gamma_P}(\mathbf{curl}, \Omega)$, let us solve

$$\begin{cases} \textit{Find } \phi \in H^1_0(\Omega) \textit{ such that} \\ \forall q \in H^1_0(\Omega),\ (\mathbb{\varepsilon}\,\mathbf{grad}\,\phi|\,\mathbf{grad}\,q) = (\mathbb{\varepsilon}\boldsymbol{v}|\,\mathbf{grad}\,q). \end{cases}$$

One has $\boldsymbol{w} = \boldsymbol{v} - \mathbf{grad}\,\phi \in \boldsymbol{K}_{N,A}(\Omega; \mathbb{\varepsilon})$ by construction and, in addition, $(\mathbf{grad}\,\phi, \boldsymbol{w})_{\boldsymbol{H}^{+}_{0,\Gamma_P}(\mathbf{curl},\Omega)} = (\mathbb{\varepsilon}\,\mathbf{grad}\,\phi|\boldsymbol{w}) = 0$, so (8.29) follows.

As before, we now construct a Hilbert basis for $\boldsymbol{H}^{+}_{0,\Gamma_P}(\mathbf{curl}, \Omega)$ in two steps: a Hilbert basis of $\boldsymbol{K}_{N,A}(\Omega; \mathbb{\varepsilon})$, and a Hilbert basis of $\mathbf{grad}[H^1_0(\Omega)]$. Let us outline the process.

The eigenproblem in $\boldsymbol{K}_{N,A}(\Omega; \mathbb{\varepsilon})$ is

$$\begin{cases} \textit{Find } (\boldsymbol{E}, \lambda) \in (\boldsymbol{K}_{N,A}(\Omega; \mathbb{\varepsilon}) \setminus \{0\}) \times \mathbb{C} \textit{ such that} \\ \forall \boldsymbol{v} \in \boldsymbol{K}_{N,A}(\Omega; \mathbb{\varepsilon}),\ (\mathbb{\mu}^{-1}\,\mathbf{curl}\,\boldsymbol{E}|\,\mathbf{curl}\,\boldsymbol{v}) + \nu(\boldsymbol{E}\times\boldsymbol{n}, \boldsymbol{v}\times\boldsymbol{n})_{\boldsymbol{L}^2_t(\Gamma_A)} = \lambda(\mathbb{\varepsilon}\boldsymbol{E}|\boldsymbol{v}). \end{cases}$$

To apply Theorem 4.5.11, we choose $V = \boldsymbol{K}_{N,A}(\Omega;\mathbb{e})$ and $H = \boldsymbol{H}(\operatorname{div}\mathbb{e}0,\Omega)$. On the one hand, $\boldsymbol{K}_{N,A}(\Omega;\mathbb{e})$ is compactly imbedded in $\boldsymbol{H}(\operatorname{div}\mathbb{e}0,\Omega)$ according to Theorem 8.1.3 and the fact that $\|\mathbb{e}^{1/2}\cdot\|$ is a norm in $\boldsymbol{H}(\operatorname{div}\mathbb{e}0,\Omega)$. On the other hand, $\boldsymbol{K}_{N,A}(\Omega;\mathbb{e})$ is a dense subset of $\boldsymbol{H}(\operatorname{div}\mathbb{e}0,\Omega)$: as a matter of fact, $\boldsymbol{K}_{N,A}(\Omega;\mathbb{e})$ contains $\boldsymbol{K}_N(\Omega;\mathbb{e})$, and one can apply Proposition 8.2.2. Hence, adding to both sides of the eigenproblem variational formulation the quantity $(\mathbb{e}\boldsymbol{E}|\boldsymbol{v})$, one gets a result in the spirit of Theorem 8.2.4, which provides a Hilbert basis of $\boldsymbol{K}_{N,A}(\Omega;\mathbb{e})$. To obtain a Hilbert basis for $\mathbf{grad}[H^1_0(\Omega)]$, we proceed as before, cf. the solution of (8.24). Accreting the two bases together yields a Hilbert basis of $\boldsymbol{H}^+_{0,\Gamma_P}(\mathbf{curl},\Omega)$. One then concludes either by a direct solution of (8.28) (taking the elements of the basis as test functions), or by the $\mathbb{T}$-coercivity theory.

Theorem 8.3.9 *Let Ω be a domain such that* $\mathbf{(Top)}_{I=0}$ *or* $\mathbf{(Top)}_{I>0}$ *is fulfilled, with boundary $\Gamma = \Gamma_P \cup \Gamma_A$ where $\partial\Gamma_P \cap \partial\Gamma_A = \emptyset$ and Γ_P is connected. Let $\mathbb{e},\mathbb{p}$ be tensor fields that fulfill assumption (5.10). Provided that ω^2 does not belong to the discrete set of eigenvalues of the eigenproblem set in $\boldsymbol{K}_{N,A}(\Omega;\mathbb{e})$, the variational formulation (8.28) with $\nu > 0$ is well-posed.*

Let us then go back the "physical" case where $\nu = -\imath\omega/Z_0$ and $Z_0 > 0$. Let $\boldsymbol{e}$ be governed by (8.28); then, thanks to the splitting of (8.29), one can write

$$\boldsymbol{e} = \mathbf{grad}\,\phi_e + \boldsymbol{w}_e,\ \ \phi_e \in H^1_0(\Omega),\ \ \boldsymbol{w}_e \in \boldsymbol{K}_{N,A}(\Omega;\mathbb{e}).$$

In addition, for $q \in H^1_0(\Omega)$, using $\boldsymbol{v} = \mathbf{grad}\,q$ as a test function in (8.28) yields

$$\imath\omega(\boldsymbol{j}|\,\mathbf{grad}\,q) = -\omega^2(\mathbb{e}\boldsymbol{e}|\,\mathbf{grad}\,q) = -\omega^2(\mathbb{e}\,\mathbf{grad}\,\phi_e|\,\mathbf{grad}\,q),$$

as $(\mathbb{e}\boldsymbol{w}_e|\,\mathbf{grad}\,q) = 0$ by integration by parts. Hence, the scalar field ϕ_e is characterized as the only solution to

$$\begin{cases} \textit{Find } \phi_e \in H^1_0(\Omega) \textit{ such that} \\ \forall q \in H^1_0(\Omega),\ (\mathbb{e}\,\mathbf{grad}\,\phi_e|\,\mathbf{grad}\,q) = -\imath\omega^{-1}(\boldsymbol{j}|\,\mathbf{grad}\,q). \end{cases}$$

Observe that, with the help of the charge conservation equation, one can replace the right-hand side above with $-\langle r,q\rangle_{H^1_0(\Omega)}$. In order to determine $\boldsymbol{e} \in \boldsymbol{H}^+_{0,\Gamma_P}(\mathbf{curl},\Omega)$, there remains to find $\boldsymbol{w}_e = \boldsymbol{e} - \mathbf{grad}\,\phi_e \in \boldsymbol{K}_{N,A}(\Omega;\mathbb{e})$. Using $\boldsymbol{v} \in \boldsymbol{K}_{N,A}(\Omega;\mathbb{e})$ as a test function in (8.28) yields:

$$\imath\omega(\boldsymbol{j}|\boldsymbol{v}) = -\omega^2(\mathbb{e}\boldsymbol{w}_e|\boldsymbol{v}) + (\mathbb{p}^{-1}\,\mathbf{curl}\,\boldsymbol{w}_e|\,\mathbf{curl}\,\boldsymbol{v}) - \frac{\imath\omega}{Z_0}(\boldsymbol{w}_e\times\boldsymbol{n},\boldsymbol{v}\times\boldsymbol{n})_{\boldsymbol{L}^2_t(\Gamma_A)},$$

as $(\mathbb{e}\,\mathbf{grad}\,\phi_e|\boldsymbol{v}) = 0$, once more by integration by parts. So we obtain that $\boldsymbol{w}_e$ is governed by

$$\begin{cases} \textit{Find } \boldsymbol{w}_e \in \boldsymbol{K}_{N,A}(\Omega;\mathbb{e}) \textit{ such that} \\ \forall \boldsymbol{v} \in \boldsymbol{K}_{N,A}(\Omega;\mathbb{e}), \\ -\omega^2(\mathbb{e}\boldsymbol{w}_e|\boldsymbol{v}) + (\mathbb{p}^{-1}\,\mathbf{curl}\,\boldsymbol{w}_e|\,\mathbf{curl}\,\boldsymbol{v}) \\ \qquad\qquad -\dfrac{\imath\omega}{Z_0}(\boldsymbol{w}_e\times\boldsymbol{n},\boldsymbol{v}\times\boldsymbol{n})_{\boldsymbol{L}^2_t(\Gamma_A)} = \imath\omega(\boldsymbol{j}|\boldsymbol{v}). \end{cases} \tag{8.30}$$

By orthogonality, one easily goes back to the variational formulation (8.28). On the other hand, to solve the variational formulation (8.30), one again uses the fact that the imbedding of $\boldsymbol{K}_{N,A}(\Omega;\mathbb{e})$ in $\boldsymbol{L}^2(\Omega)$ is compact. In this instance, this result will be used in conjunction with the Fredholm alternative (see Theorem 4.1.18 or Corollary 4.1.19).
Define the sesquilinear form

$$a_+ : (\boldsymbol{v},\boldsymbol{w}) \mapsto (\mathbb{e}\boldsymbol{v}|\boldsymbol{w}) + (\mathbb{p}^{-1}\,\mathbf{curl}\,\boldsymbol{v}|\,\mathbf{curl}\,\boldsymbol{w}) - \frac{\imath\omega}{Z_0}(\boldsymbol{v}\times\boldsymbol{n},\boldsymbol{w}\times\boldsymbol{n})_{\boldsymbol{L}^2_t(\Gamma_A)},$$

which is coercive on $\boldsymbol{K}_{N,A}(\Omega;\mathbb{e})$. Indeed, one has

$$a_+(\boldsymbol{v},\boldsymbol{v}) = \|\mathbb{e}^{1/2}\boldsymbol{v}\|^2 + \|\mathbb{p}^{-1/2}\,\mathbf{curl}\,\boldsymbol{v}\|^2 - \frac{\imath\omega}{Z_0}\|\boldsymbol{v}\times\boldsymbol{n}\|^2_{\boldsymbol{L}^2_t(\Gamma_A)}.$$

It follows that

$$\begin{aligned}|a_+(\boldsymbol{v},\boldsymbol{v})| &\geq \frac{1}{\sqrt{2}}\Big(|\Re(a_+(\boldsymbol{v},\boldsymbol{v}))| + |\Im(a_+(\boldsymbol{v},\boldsymbol{v}))|\Big)\\ &= \frac{1}{\sqrt{2}}\left(\|\mathbb{e}^{1/2}\boldsymbol{v}\|^2 + \|\mathbb{p}^{-1/2}\,\mathbf{curl}\,\boldsymbol{v}\|^2 + \frac{\omega}{Z_0}\|\boldsymbol{v}\times\boldsymbol{n}\|^2_{\boldsymbol{L}^2_t(\Gamma_A)}\right).\end{aligned}$$

Due to the assumptions about $\mathbb{e},\mathbb{p}$ (see (5.10)), and because $\omega, Z_0 > 0$, coerciveness follows. Now, note that (8.30) can be reformulated as

$$\begin{cases}\textit{Find } \boldsymbol{w}_e \in \boldsymbol{K}_{N,A}(\Omega;\mathbb{e}) \textit{ such that}\\ \forall \boldsymbol{v}\in\boldsymbol{K}_{N,A}(\Omega;\mathbb{e}),\ a_+(\boldsymbol{w}_e,\boldsymbol{v}) - (\omega^2+1)(\mathbb{e}\boldsymbol{w}_e|\boldsymbol{v}) = \imath\omega(\boldsymbol{j}|\boldsymbol{v}).\end{cases}$$

Let us introduce the operator $\mathtt{K}\in\mathcal{L}(\boldsymbol{L}^2(\Omega))$, defined by: given $\boldsymbol{g}\in\boldsymbol{L}^2(\Omega)$, let $\mathtt{K}\boldsymbol{g} = i_{\boldsymbol{K}_{N,A}(\Omega;\mathbb{e})\to\boldsymbol{L}^2(\Omega)}\boldsymbol{w}_g$, where $\boldsymbol{w}_g$ is the solution to

$$\begin{cases}\textit{Find } \boldsymbol{w}_g \in \boldsymbol{K}_{N,A}(\Omega;\mathbb{e}) \textit{ such that}\\ \forall \boldsymbol{v}\in\boldsymbol{K}_{N,A}(\Omega;\mathbb{e}),\ a_+(\boldsymbol{w}_g,\boldsymbol{v}) = (\mathbb{e}\boldsymbol{g}|\boldsymbol{v}).\end{cases}$$

By construction, $\mathtt{K}$ is a compact operator of $\mathcal{L}(\boldsymbol{L}^2(\Omega))$. Furthermore, (8.30) is equivalent to

$$\textit{Find } \boldsymbol{w}_e\in\boldsymbol{L}^2(\Omega) \textit{ such that } \{I_{\boldsymbol{L}^2(\Omega)} - (\omega^2+1)\mathtt{K}\}\boldsymbol{w}_e = \imath\omega\mathtt{K}(\mathbb{e}^{-1}\boldsymbol{j}). \quad (8.31)$$

This problem with unknown $\boldsymbol{w}_e$ in $\boldsymbol{L}^2(\Omega)$ falls within the Fredholm alternative. Therefore, to achieve the existence of a solution to (8.31) plus well-posedness, it is equivalent that $\boldsymbol{w}_0 = 0$ is the only solution to

$$\textit{Find } \boldsymbol{w}_0\in\boldsymbol{L}^2(\Omega) \textit{ such that } \{I_{\boldsymbol{L}^2(\Omega)} - (\omega^2+1)\mathtt{K}\}\boldsymbol{w}_0 = 0.$$

Or, going back to the variational formulation, that the only solution to $(8.30)_{\boldsymbol{j}=0}$ is 0. Denoting it by $\boldsymbol{w}_0$, one has $\boldsymbol{w}_0 \in \boldsymbol{H}^+_{0,\Gamma_P}(\mathbf{curl},\Omega)$, and $\operatorname{div}\mathbb{e}\boldsymbol{w}_0 = 0$ in Ω. In addition, taking $\boldsymbol{v} = \boldsymbol{w}_0$ as a test function in

$(8.30)_{\boldsymbol{j}=0}$ and keeping only the imaginary part yields $\|\boldsymbol{w}_0 \times \boldsymbol{n}\|^2_{\boldsymbol{L}^2_t(\Gamma_A)} = 0$, i.e., $\boldsymbol{w}_0 \times \boldsymbol{n}_{|\Gamma_A} = 0$. In particular, $\boldsymbol{w}_0 \in \boldsymbol{H}_0(\mathbf{curl}, \Omega)$. Next, for $\boldsymbol{v} \in \boldsymbol{D}(\Omega)$, let $q \in H^1_0(\Omega)$ be such that $\operatorname{div} \mathbb{e}\, \mathbf{grad}\, q = \operatorname{div} \mathbb{e}\boldsymbol{v}$ in Ω. As usual, $\boldsymbol{v} - \mathbf{grad}\, q$ belongs to $\boldsymbol{K}_{N,A}(\Omega; \mathbb{e})$, and so it can be used as a test function in $(8.30)_{\boldsymbol{j}=0}$. It follows that,

$$\forall \boldsymbol{v} \in \boldsymbol{D}(\Omega),\ \langle -\omega^2 \mathbb{e}\boldsymbol{w}_0 + \mathbf{curl}(\mathbb{\mu}^{-1}\, \mathbf{curl}\, \boldsymbol{w}_0), \overline{\boldsymbol{v}}\rangle = 0,$$

that is, $-\omega^2 \mathbb{e}\boldsymbol{w}_0 + \mathbf{curl}(\mathbb{\mu}^{-1}\, \mathbf{curl}\, \boldsymbol{w}_0) = 0$ in Ω. Similarly, for $\boldsymbol{v} \in \boldsymbol{C}^\infty_{\Gamma_P}(\overline{\Omega})$, we define $q \in H^1_0(\Omega)$ as above, so that $\boldsymbol{v} - \mathbf{grad}\, q \in \boldsymbol{K}_{N,A}(\Omega; \mathbb{e})$ can be used as a test function in $(8.30)_{\boldsymbol{j}=0}$. After integrating by parts, one now finds

$$\forall \boldsymbol{v} \in \boldsymbol{C}^\infty_{\Gamma_P}(\overline{\Omega}),\ {}_{\pi_A}\langle (\mathbb{\mu}^{-1}\, \mathbf{curl}\, \boldsymbol{w}_0)_\top, \boldsymbol{v} \times \boldsymbol{n}\rangle_{\gamma_A} = 0.$$

As previously, we obtain $(\mathbb{\mu}^{-1}\, \mathbf{curl}\, \boldsymbol{w}_0)_\top = 0$ on Γ_A (more precisely, in $\boldsymbol{H}^{-1/2}_\perp(\mathrm{curl}_\Gamma, \Gamma_A)$).
Hence, $\boldsymbol{w}_0$ fulfills two homogeneous boundary conditions on Γ_A, namely, $\boldsymbol{w}_0 \times \boldsymbol{n} = \mathbb{\mu}^{-1}\, \mathbf{curl}\, \boldsymbol{w}_0 \times \boldsymbol{n} = 0$. To conclude that $\boldsymbol{w}_0$ vanishes on Ω, we apply the *unique continuation principle* (cf. [87, 165]).
To that aim, set $\boldsymbol{e}_0 = \boldsymbol{w}_0$ and $\boldsymbol{h}_0 = -\imath/\omega \mathbb{\mu}^{-1}\, \mathbf{curl}\, \boldsymbol{w}_0$ in Ω. By construction, both fields $\boldsymbol{e}_0, \boldsymbol{h}_0$ belong to $\boldsymbol{H}_{0,\Gamma_A}(\mathbf{curl}, \Omega)$, so one can define their continuations by zero to $\Omega^+ := B(0, R+1) \setminus \overline{B(0,R)}$ (recall $\Omega \subset B(0,R)$), still denoted by $\boldsymbol{e}_0$ and $\boldsymbol{h}_0$. Below, we state a result of [205, 171].

Theorem 8.3.10 (`unique continuation principle`) *Let Ω_0 be a connected domain, and let $\mathbb{e}, \mathbb{\mu}$ be tensor fields that fulfill assumption (5.10), with regularity $\mathbb{e}, \mathbb{\mu} \in \mathbb{W}^{1,\infty}(\Omega_0)$. Let $\boldsymbol{e}_0, \boldsymbol{h}_0 \in \boldsymbol{H}(\mathbf{curl}, \Omega_0)$ be such that, for some $\omega_0 > 0$,*

$$\imath\omega_0 \mathbb{e}\boldsymbol{e}_0 + \mathbf{curl}\, \boldsymbol{h}_0 = 0,\ -\imath\omega_0 \mathbb{\mu}\boldsymbol{h}_0 + \mathbf{curl}\, \boldsymbol{e}_0 = 0 \text{ in } \Omega_0.$$

If $\boldsymbol{e}_0$ vanishes in a (non)-trivial ball B_0 of Ω_0 and if there exists $\boldsymbol{x}_0 \in B_0$ such that $\mathbb{\mu}(\boldsymbol{x}_0) = \xi \mathbb{e}(\boldsymbol{x}_0)$ for some $\xi > 0$, then $(\boldsymbol{e}_0, \boldsymbol{h}_0) = (0,0)$ in Ω_0.

In the case when $\mathbb{e}, \mathbb{\mu}$ are globally smooth on $\overline{\Omega}$, one can define a suitable continuation of those tensors to Ω^+. By suitable, we mean that it is understood that the continuations fulfill (5.10) in Ω^+, and furthermore, that there exists a point of Ω^+ such that $\mathbb{e}$ and $\mathbb{\mu}$ are proportional at this point, with a strictly positive multiplicative factor. In this case, all the assumptions of Theorem 8.3.10 are fulfilled for $\boldsymbol{e}_0, \boldsymbol{h}_0$ on $\Omega_0 = int(\overline{\Omega \cup \Omega^+})$ with $\omega_0 = \omega$. One concludes that $\boldsymbol{w}_0 = \boldsymbol{e}_0$ vanishes in Ω, so that the truncated diffraction problem is well-posed.

More generally, if $\mathbb{e}, \mathbb{\mu}$ are only piecewise smooth on $\overline{\Omega}$, one can apply the same process iteratively. To fix ideas, consider a partition of Ω, $\mathcal{P} = (\Omega_p)_{1 \le p \le P}$, such that all components of $\mathbb{e}, \mathbb{\mu}$ are smooth on $\overline{\Omega_p}$, for $1 \le p \le P$.
Let $(\Omega_{p,1})_p$ be the elements of the partition $\mathcal{P}$ such that $meas_\Gamma(\partial\Omega_p \cap \Gamma_A) > 0$.

For each domain $\Omega_{p,1}$, one can apply the same path as before to find that $(\boldsymbol{e}_0, \boldsymbol{h}_0) = (0,0)$ in $\Omega_{p,1}$, with the help of different continuations if necessary. Let $\Omega^1 = \Omega$ and $\Omega_{\{1\}} = int(\overline{\cup_p \Omega_{p,1}})$: due to the global regularity of the fields, one concludes that $\boldsymbol{e}_0, \boldsymbol{h}_0$ vanish in $\Omega_{\{1\}}$. It follows that $\boldsymbol{e}_0, \boldsymbol{h}_0$ both belong to $\boldsymbol{H}_{0,\Gamma_A^2}(\mathbf{curl}, \Omega_2)$, where $\Omega^2 = \Omega^1 \setminus \overline{\Omega_{\{1\}}}$ and $\Gamma_A^2 = (\partial\Omega_{\{1\}} \cap \partial\Omega^2) \setminus \Gamma_P$.
Let $(\Omega_{p,2})_p$ be the remaining elements of $\mathcal{P}$ such that $meas_\Gamma(\partial\Omega_p \cap \Gamma_A^2) > 0$. As above, if one lets $\Omega_{\{2\}} = int(\overline{\cup_p \Omega_{p,2}})$, one obtains that $\boldsymbol{e}_0, \boldsymbol{h}_0$ vanish in $\Omega_{\{2\}}$, and also that they belong to $\boldsymbol{H}_{0,\Gamma_A^3}(\mathbf{curl}, \Omega_3)$, where $\Omega^3 = \Omega^2 \setminus \overline{\Omega_{\{2\}}}$ and $\Gamma_A^3 = (\partial\Omega_{\{2\}} \cap \partial\Omega^3) \setminus \Gamma_P$.
Because Ω is connected, one can carry on and span all the domains of the partition iteratively, so that $\boldsymbol{e}_0, \boldsymbol{h}_0$ globally vanish on Ω, and so does $\boldsymbol{w}_0$. Hence, the truncated diffraction problem is again well-posed.

Theorem 8.3.11 *Let Ω be a domain such that* $\mathbf{(Top)}_{I=0}$ *or* $\mathbf{(Top)}_{I>0}$ *is fulfilled, with boundary $\Gamma = \Gamma_P \cup \Gamma_A$, where $\partial\Gamma_P \cap \partial\Gamma_A = \emptyset$ and Γ_P is connected. Let $\mathfrak{e}, \mathfrak{p}$ be tensor fields that fulfill assumption (5.10) and the coefficient assumption. Then, the truncated diffraction problem (8.28) with impedance $Z_0 > 0$ and $\nu = -\imath\omega/Z_0$ is well-posed.*

8.4 Interface problem between a dielectric and a Lorentz material

Inside a Lorentz material, and in the absence of damping, it has been noted that the electric permittivity can be negative in given pulsation ranges (cf. §1.2.4). We consider here[3] that $\omega \neq 0$ is chosen so that this condition is verified. Then, let Ω be a domain partitioned into the non-trivial partition $\mathcal{P} := (\Omega_p)_{p=+,-}$, with a dielectric in Ω_+ and a Lorentz material in Ω_-, and assume that $\mathfrak{e}$ is a tensor field such that $\delta\,\mathfrak{e}$ fulfills (5.10), with $\delta = +1$ in Ω_+ and $\delta = -1$ in Ω_-. In this setting, the main difference with the "classical" setting is that $(\mathfrak{e}\cdot|\cdot)$ is not a scalar product in $\boldsymbol{L}^2(\Omega)$. This is the main difficulty to overcome, in order to solve the interface problem between a dielectric and a Lorentz material. Because $\omega \neq 0$ and as noted at the end of §8.2, one may still check that it is equivalent to solve the coupled first-order system in $(\boldsymbol{e}, \boldsymbol{h})$, or either one of the second-order systems in $\boldsymbol{e}$, respectively in $\boldsymbol{h}$. In what follows, we focus on solving the electric Helmholtz-like problem (8.22).
To be able to carry out the study, one makes the assumption (H_ε):
the scalar problem with data $g \in H^{-1}(\Omega)$

$$\begin{cases} \textit{Find } q \in H_0^1(\Omega) \textit{ such that} \\ \forall q' \in H_0^1(\Omega),\ (\mathfrak{e}\,\mathbf{grad}\, q | \,\mathbf{grad}\, q') = g(q') \end{cases} \tag{8.32}$$

is *well-posed*. According to Proposition 4.2.14 and Remark 4.2.16, we infer that there exist $\mathbb{T} \in \mathcal{L}(H_0^1(\Omega))$ and $\underline{\alpha} > 0$ such that

[3] The problem to be solved is not static, which is the reason why it has not already been addressed in §§6.1-6.2.

$$\forall q \in H_0^1(\Omega),\ |(\mathbb{e}\,\mathbf{grad}\,q|\,\mathbf{grad}(\mathbb{T}q))| \geq \underline{\alpha}\,\|q\|^2_{H^1(\Omega)}. \tag{8.33}$$

On the other hand, the magnetic permeability $\mathbb{\mu}$ is a tensor field that fulfills (5.10).
In this setting, under assumption (H_ε), let us first build an equivalent variational formulation to the interface electric Helmholtz-like problem (8.22), with data $(\boldsymbol{j}, r) \in \boldsymbol{L}^2(\Omega) \times H^{-1}(\Omega)$ that fulfills the charge conservation equation, and solution $\boldsymbol{e} \in \boldsymbol{H}(\mathbf{curl}, \Omega)$.
Define ϕ_r as the (unique) solution to (8.32) with right-hand side $g(q') = -\langle r, q'\rangle_{H_0^1(\Omega)}$, and let $\boldsymbol{j}_0 = \boldsymbol{j} - \imath\omega\mathbb{e}\,\mathbf{grad}\,\phi_r$. By construction, $\operatorname{div}\boldsymbol{j}_0 = 0$. By inspection, $\boldsymbol{e}$ solves (8.22) with data $(\boldsymbol{j}, r)$ if, and only if, $\boldsymbol{e}_0 = \boldsymbol{e} - \mathbf{grad}\,\phi_r$ solves (8.22) with data $(\boldsymbol{j}_0, 0)$. Hence, characterizing $\boldsymbol{e}$ amounts to characterizing $\boldsymbol{e}_0$. In the sequel, we focus on the latter field $\boldsymbol{e}_0 \in \boldsymbol{K}_N(\Omega; \mathbb{e})$; we refer to (8.22) with solution $\boldsymbol{e}_0$ as $(8.22)_0$. Note in passing the non-orthogonal, albeit direct, Helmholtz decomposition, under assumption (H_ε):

$$\begin{array}{ccccc} \boldsymbol{H}_0(\mathbf{curl}, \Omega) & = & \mathbf{grad}\,H_0^1(\Omega) & \oplus & \boldsymbol{K}_N(\Omega; \mathbb{e}) \\ \rotatebox{90}{$\in$} & & \rotatebox{90}{$\in$} & & \rotatebox{90}{$\in$} \\ \boldsymbol{e} & = & \mathbf{grad}\,\phi_r & + & \boldsymbol{e}_0 \end{array} \tag{8.34}$$

One can build a variational formulation in $\boldsymbol{K}_N(\Omega; \mathbb{e})$ endowed with the $\boldsymbol{H}(\mathbf{curl}, \Omega)$-norm, which is equivalent to the interface electric Helmholtz-like problem $(8.22)_0$. Namely,

$$\begin{cases} \textit{Find } \boldsymbol{e}_0 \in \boldsymbol{K}_N(\Omega; \mathbb{e}) \textit{ such that} \\ \forall \boldsymbol{v} \in \boldsymbol{K}_N(\Omega; \mathbb{e}),\ -\omega^2(\mathbb{e}\boldsymbol{e}_0|\boldsymbol{v}) + (\mathbb{\mu}^{-1}\,\mathbf{curl}\,\boldsymbol{e}_0|\,\mathbf{curl}\,\boldsymbol{v}) = \imath\omega(\boldsymbol{j}_0|\boldsymbol{v}). \end{cases} \tag{8.35}$$

Proposition 8.4.1 *Under assumption (H_ε), $\boldsymbol{e}_0$ solves the interface electric Helmholtz-like problem $(8.22)_0$ if, and only if, $\boldsymbol{e}_0$ solves the variational formulation (8.35).*

Proof. Straightforward using the Helmholtz decomposition (8.34). ■

Second, one can show that (8.35) fits into the coercive+compact framework. This is carried out in several steps.
To begin with, one characterizes the spaces $Q_N(\Omega; \mathbb{e})$ and $\boldsymbol{Z}_N(\Omega; \mathbb{e})$.

Proposition 8.4.2 *Under assumption (H_ε), for every $1 \leq \ell \leq K$, there exists a unique $q_\ell^\varepsilon \in H^1_{\partial\Omega}(\Omega)$ such that $\operatorname{div}\mathbb{e}\,\mathbf{grad}\,q_\ell^\varepsilon = 0$ in Ω, and $q_\ell^\varepsilon = \delta_{k\ell}$ on Γ_k, $\forall k$.*

Proof. Since the trace operator γ_0 is surjective from $H^1(\Omega)$ to $H^{1/2}(\Gamma)$ (Theorem 2.1.62), there exists $q_\ell \in H^1(\Omega)$ whose trace is equal to the function $\delta_{k\ell}$ on Γ. Next, define q^ℓ as the (unique) solution to (8.32) with right-hand side $g(q') = (\mathbb{e}\,\mathbf{grad}\,q_\ell|\,\mathbf{grad}\,q')$. Then, $q_\ell^\varepsilon = q_\ell + q^\ell$ is such that $\operatorname{div}\mathbb{e}\,\mathbf{grad}\,q^\varepsilon = 0$ in Ω, and $q_\ell^\varepsilon = \delta_{k\ell}$ on Γ_k, $\forall k$. This proves existence.
One checks uniqueness simply by noting that the difference of two solutions solves (8.32) with zero right-hand side, so it is equal to zero. ■

Corollary 8.4.3 *Under assumption* (H_ε)*, one has*

$$\dim Q_N(\Omega;\mathbb{c}) = \dim \boldsymbol{Z}_N(\Omega;\mathbb{c}) = K.$$

Proof. To begin with, $(q_\ell^\varepsilon)_{1\le\ell\le K}$ is a free family, and one has $\mathrm{span}_{1\le\ell\le K}(q_\ell^\varepsilon) \subset Q_N(\Omega;\mathbb{c})$. Then, given $q \in Q_N(\Omega;\mathbb{c})$, one remarks that $q - \sum_{\ell=1,K}(q_{|\Gamma_\ell})q_\ell^\varepsilon$ solves (8.32) with $g = 0$, hence $q = \sum_{\ell=1,K}(q_{|\Gamma_\ell})q_\ell^\varepsilon$, so the converse inclusion holds. Il follows, in particular, that $\dim(Q_N(\Omega;\mathbb{c})) = K$.
By definition, $(\mathbf{grad}\, q_\ell^\varepsilon)_{1\le\ell\le K}$ is a free family of $\boldsymbol{Z}_N(\Omega;\mathbb{c})$. On the other hand, given $\boldsymbol{z} \in \boldsymbol{Z}_N(\Omega;\mathbb{c})$, we know from Theorem 3.3.9 that there exists $p \in H^1_{\partial\Omega}(\Omega)$ such that $\boldsymbol{z} = \mathbf{grad}\, p$ in Ω. In addition, $\mathrm{div}\,\mathbb{c}\,\mathbf{grad}\, p = \mathrm{div}\,\mathbb{c}\boldsymbol{z} = 0$ in Ω, so p actually belongs to $Q_N(\Omega;\mathbb{c})$. Hence, $\dim(\boldsymbol{Z}_N(\Omega;\mathbb{c})) = K$. ■

Next, one derives a direct decomposition of $\boldsymbol{K}_N(\Omega;\mathbb{c})$. Define

$$\hat{\boldsymbol{K}}_N(\Omega;\mathbb{c}) := \{\boldsymbol{v} \in \boldsymbol{K}_N(\Omega;\mathbb{c}) \,:\, (\mathbb{c}\boldsymbol{v}|\,\mathbf{grad}\, q_\ell^\varepsilon) = 0,\ 1 \le \ell \le K\}.$$

Proposition 8.4.4 *Under assumption* (H_ε)*, there exists* $(\boldsymbol{P}_k^\varepsilon)_{1\le k\le K} \in (\boldsymbol{K}_N(\Omega;\mathbb{c}))^K$ *such that, for* $1 \le k, \ell \le K$*,* $(\mathbb{c}\,\mathbf{grad}\, q_\ell^\varepsilon|\boldsymbol{P}_k^\varepsilon) = \delta_{k\ell}$*. It follows that*

$$\boldsymbol{K}_N(\Omega;\mathbb{c}) = \hat{\boldsymbol{K}}_N(\Omega;\mathbb{c}) \oplus \mathrm{span}_{1\le k\le K}(\boldsymbol{P}_k^\varepsilon).$$

Proof. Straightforward after checking that the forms $m_\ell \in (\boldsymbol{K}_N(\Omega;\mathbb{c}))'$ defined by $m_\ell(\boldsymbol{v}) = (\mathbb{c}\boldsymbol{v}|\,\mathbf{grad}\, q_\ell^\varepsilon)$ for $1 \le \ell \le K$ are a free family. ■

One can then prove that the imbedding of $\boldsymbol{K}_N(\Omega;\mathbb{c})$ into $\boldsymbol{L}^2(\Omega)$ is compact.

Theorem 8.4.5 *Let* Ω *be a domain such that* $\mathbf{(Top)}_{I=0}$ *or* $\mathbf{(Top)}_{I>0}$ *is fulfilled and that can be partitioned into the non-trivial partition* $\mathcal{P} := (\Omega_p)_{p=+,-}$*, and define* δ *by* $\delta = +1$ *in* Ω_+*,* $\delta = -1$ *in* Ω_-*. Let* $\mathbb{c}$ *be a tensor field such that* $\delta\,\mathbb{c}$ *fulfills (5.10). Assume that* (H_ε) *holds and that the operator* $\mathbb{T}$ *of* (8.33) *also belongs to* $\mathcal{L}(L^2(\Omega))$*. Then, given any* $s \in [0,1[$*, one has* $\boldsymbol{X}_{N,-s}(\Omega;\mathbb{c}) \subset_c \boldsymbol{L}^2(\Omega)$*.*

Proof. Consider $(\boldsymbol{y}_m)_m$ a bounded sequence of $\boldsymbol{X}_{N,-s}(\Omega;\mathbb{c})$. One can proceed as usual, extracting a subsequence that converges in $\boldsymbol{L}^2(\Omega)$ in three steps.
1. Let $q_m^0 \in H_0^1(\Omega)$ solve (8.32) with right-hand side $g(q') = (\mathbb{c}\boldsymbol{y}_m|\,\mathbf{grad}\, q')$. One has, according to (8.33),

$$\begin{aligned}\underline{\alpha}\,\|q_m^0\|^2_{H^1(\Omega)} &\le |(\mathbb{c}\boldsymbol{y}_m|\,\mathbf{grad}(\mathbb{T}q_m^0))| \le \|\,\mathrm{div}\,\mathbb{c}\boldsymbol{y}_m\|_{H^{-1}(\Omega)}\|\mathbb{T}q_m^0\|_{H^1(\Omega)}\\ &\le |||\mathbb{T}|||_{\mathcal{L}(H_0^1(\Omega))}\|\,\mathrm{div}\,\mathbb{c}\boldsymbol{y}_m\|_{H^{-1}(\Omega)}\|q_m^0\|_{H^1(\Omega)},\end{aligned}$$

so $\|q_m^0\|_{H^1(\Omega)} \le \underline{\alpha}^{-1}|||\mathbb{T}|||_{\mathcal{L}(H_0^1(\Omega))}\|\,\mathrm{div}\,\mathbb{c}\boldsymbol{y}_m\|_{H^{-1}(\Omega)}$: $(q_m^0)_m$ is a bounded sequence in $H^1(\Omega)$. Since $s < 1$, there exists a subsequence still denoted by $(q_m^0)_m$ that converges in $H^s(\Omega)$. Moreover, $q_m^0 \in H_0^s(\Omega)$. By assumption, $\mathbb{T} \in \mathcal{L}(L^2(\Omega)) \cap \mathcal{L}(H_0^1(\Omega))$: we know from Proposition 4.1.23 (interpolation

of operators[4]) that $\mathbb{T} \in \mathcal{L}(H_0^s(\Omega))$. Denoting $\boldsymbol{y}_{mn} := \boldsymbol{y}_m - \boldsymbol{y}_n$, etc., it follows that

$$\begin{aligned}\underline{\alpha}\,\|q_{mn}^0\|_{H^1(\Omega)}^2 &\le |(\mathbb{e}\boldsymbol{y}_{mn}|\,\mathbf{grad}(\mathbb{T}q_{mn}^0))| \\ &\le 2\,|||\mathbb{T}|||_{\mathcal{L}(H_0^s(\Omega))}\,\sup_m(\|\operatorname{div}\mathbb{e}\boldsymbol{y}_m\|_{H^{-s}(\Omega)})\|q_{mn}^0\|_{H^s(\Omega)}.\end{aligned}$$

In other words, $(q_m^0)_m$ is a Cauchy sequence in $H^1(\Omega)$, so it converges in this space. As a consequence, $(\mathbf{grad}\,q_m^0)_m$ converges in $\boldsymbol{L}^2(\Omega)$.
2. Let $\boldsymbol{x}_m := \boldsymbol{y}_m - \mathbf{grad}\,q_m^0 \in \boldsymbol{K}_N(\Omega;\mathbb{e})$. According to Proposition 8.4.4, one may split $\boldsymbol{x}_m$ continuously as

$$\boldsymbol{x}_m = \hat{\boldsymbol{x}}_m + \sum_{1\le k\le K}\alpha_m^k\boldsymbol{P}_k^\varepsilon,\ \hat{\boldsymbol{x}}_m \in \hat{\boldsymbol{K}}_N(\Omega;\mathbb{e}),\ (\alpha_m^k)_{1\le k\le K} \in \mathbb{C}^K.$$

Since $(\boldsymbol{x}_m)_m$ is bounded in $\boldsymbol{K}_N(\Omega;\mathbb{e})$, one may extract a converging subsequence of $((\alpha_m^k)_{1\le k\le K})_m$ in $\mathbb{C}^K$, still denoted by $((\alpha_m^k)_{1\le k\le K})_m$.
3. To prove the claim, one has to extract a subsequence from $(\hat{\boldsymbol{x}}_m)_m$ that converges in $\boldsymbol{L}^2(\Omega)$. By construction, the field $\mathbb{e}\hat{\boldsymbol{x}}_m$ belongs to $\boldsymbol{H}(\operatorname{div}0,\Omega)$. According to the definition of $\hat{\boldsymbol{K}}_N(\Omega;\mathbb{e})$ (and of $(q_\ell^\varepsilon)_{1\le\ell\le K}$), one has, in addition, $\langle\mathbb{e}\hat{\boldsymbol{x}}_m\cdot\boldsymbol{n},1\rangle_{H^{1/2}(\Gamma_k)} = 0$ for all k. Then, using Theorem 3.6.1 for every m, one obtains a bounded sequence $(\boldsymbol{w}_m)_m$ of elements of

$$\boldsymbol{K}_T^\Sigma(\Omega) := \{\boldsymbol{w}\in\boldsymbol{K}_T(\Omega)\ :\ \langle\boldsymbol{w}\cdot\boldsymbol{n},1\rangle_{\Sigma_i} = 0,\ 1\le i\le I\}$$

such that $\mathbb{e}\hat{\boldsymbol{x}}_m = \mathbf{curl}\,\boldsymbol{w}_m$ in Ω. Because of the sign-change of $\mathbb{e}$, one must recover some positivity to end the proof.[5] To this end, proceed as follows.
For given $\boldsymbol{w}\in\boldsymbol{K}_T^\Sigma(\Omega)$:
i. Let $r\in H_0^1(\Omega)$ solve (8.32) with right-hand side $g(q') = (\mathbb{e}\,\mathbf{curl}\,\boldsymbol{w}|\,\mathbf{grad}\,q')$.
ii. Introducing

$$\boldsymbol{P} = \sum_{1\le k\le K}(\mathbb{e}\,\mathbf{curl}\,\boldsymbol{w}|\,\mathbf{grad}\,q_k^\varepsilon)\boldsymbol{P}_k^\varepsilon \text{ and } \boldsymbol{v} = \mathbb{e}(\mathbf{curl}\,\boldsymbol{w} - \mathbf{grad}\,r - \boldsymbol{P}),$$

one has $\boldsymbol{v}\in\boldsymbol{H}(\operatorname{div}0,\Omega)$, with $\langle\boldsymbol{v}\cdot\boldsymbol{n},1\rangle_{H^{1/2}(\Gamma_k)} = 0$ for all k. As a matter of fact, $\operatorname{div}\mathbb{e}\boldsymbol{P} = 0$ and $\operatorname{div}\mathbb{e}(\mathbf{grad}\,r - \mathbf{curl}\,\boldsymbol{w}) = 0$ by definition. Furthermore,

$$\begin{aligned}\langle\boldsymbol{v}\cdot\boldsymbol{n},1\rangle_{H^{1/2}(\Gamma_k)} &= \langle\boldsymbol{v}\cdot\boldsymbol{n},q_k^\varepsilon\rangle_{H^{1/2}(\Gamma_k)} = (\boldsymbol{v}\mid\mathbf{grad}\,q_k^\varepsilon) \\ &= (\mathbb{e}\,\mathbf{curl}\,\boldsymbol{w}\mid\mathbf{grad}\,q_k^\varepsilon) - (\mathbb{e}\,\mathbf{grad}\,r\mid\mathbf{grad}\,q_k^\varepsilon) - (\mathbb{e}\boldsymbol{P}\mid\mathbf{grad}\,q_k^\varepsilon).\end{aligned}$$

Indeed, as $r\in H_0^1(\Omega)$, the second term is equal to:

[4] For the property $\mathbb{T}\in\mathcal{L}(H_0^s(\Omega))$ to hold, one must exclude the case $s = 1/2$ (see Propositions 2.1.44 and 2.1.47 for the interpolation of the Sobolev spaces). However, if $s = 1/2$, one simply chooses *any* $s'\in]1/2,1[$, and then step 1. is carried out with a subsequence $(q_m^0)_m$ that converges in $H_0^{s'}(\Omega)$.

[5] As a matter of fact, $(\mathbb{e}\cdot|\cdot)$ is not a scalar product on $\boldsymbol{L}^2(\Omega)$, but $(\mathbb{e}\cdot|\mathbb{e}\cdot)$ is, and the associated norm is obviously equivalent to $\|\cdot\|$.

$$(\mathbb{e}\,\mathbf{grad}\,r \mid \mathbf{grad}\,q_k^\varepsilon) = \langle r\,,\,\underbrace{\operatorname{div}\mathbb{e}\,\mathbf{grad}\,q_k^\varepsilon}_{0}\rangle_{H^{-1}(\Omega)} = 0,$$

while, by Proposition 8.4.4,

$$\begin{aligned}(\mathbb{e}\boldsymbol{P} \mid \mathbf{grad}\,q_k^\varepsilon) &= \sum_{1\le\ell\le K} (\mathbb{e}\,\mathbf{curl}\,\boldsymbol{w} \mid \mathbf{grad}\,q_\ell^\varepsilon)\,\underbrace{(\mathbb{e}\boldsymbol{P}_\ell^\varepsilon \mid \mathbf{grad}\,q_k^\varepsilon)}_{\delta_{k\ell}}\\ &= (\mathbb{e}\,\mathbf{curl}\,\boldsymbol{w} \mid \mathbf{grad}\,q_k^\varepsilon),\end{aligned}$$

which cancels out the first term.
iii. According once more to Theorem 3.6.1, there exists a unique vector potential $\hat{\mathbb{T}}\boldsymbol{w} \in \boldsymbol{K}_T^\Sigma(\Omega)$ such that $\boldsymbol{v} = \mathbf{curl}(\hat{\mathbb{T}}\boldsymbol{w})$ in Ω, and $\|\hat{\mathbb{T}}\boldsymbol{w}\|_{\boldsymbol{H}(\mathbf{curl},\Omega)} \le C\,\|\boldsymbol{w}\|_{\boldsymbol{H}(\mathbf{curl},\Omega)}$ with $C > 0$ independent of $\boldsymbol{w}$.
By construction, $\boldsymbol{w} \mapsto \hat{\mathbb{T}}\boldsymbol{w}$ defines an operator $\hat{\mathbb{T}} \in \mathcal{L}(\boldsymbol{K}_T^\Sigma(\Omega))$.
Recall that $\boldsymbol{K}_T^\Sigma(\Omega)$ is compactly imbedded into $\boldsymbol{L}^2(\Omega)$ (see Theorem 3.5.4); then, going back to $(\boldsymbol{w}_m)_m$, which is a bounded sequence of $\boldsymbol{K}_T^\Sigma(\Omega)$, there exists a subsequence still denoted by $(\boldsymbol{w}_m)_m$ such that $(\hat{\mathbb{T}}\boldsymbol{w}_m)_m$ converges in $\boldsymbol{L}^2(\Omega)$. Now, denoting $\hat{\boldsymbol{x}}_{mn} := \hat{\boldsymbol{x}}_m - \hat{\boldsymbol{x}}_n$, etc., it follows that

$$\begin{aligned}\|\mathbb{e}\hat{\boldsymbol{x}}_{mn}\|^2 &= (\mathbb{e}\hat{\boldsymbol{x}}_{mn}|\,\mathbf{curl}\,\boldsymbol{w}_{mn}) = (\hat{\boldsymbol{x}}_{mn}|\mathbb{e}\,\mathbf{curl}\,\boldsymbol{w}_{mn})\\ &= (\hat{\boldsymbol{x}}_{mn}|\boldsymbol{v}_{mn} + \mathbb{e}\,\mathbf{grad}\,r_{mn} + \mathbb{e}\boldsymbol{P}_{mn})\\ &= (\hat{\boldsymbol{x}}_{mn}|\boldsymbol{v}_{mn}) + (\mathbb{e}\hat{\boldsymbol{x}}_{mn}|\,\mathbf{grad}\,r_{mn}) + (\mathbb{e}\hat{\boldsymbol{x}}_{mn}|\boldsymbol{P}_{mn}).\end{aligned}$$

Above, the sequences $(\boldsymbol{v}_m)_m$, $(r_m)_m$, $(\boldsymbol{P}_m)_m$ have been defined according to steps i and ii; they are bounded in $\boldsymbol{L}^2(\Omega)$, $H_0^1(\Omega)$, $\operatorname{span}\{\boldsymbol{P}_k^\varepsilon\}_{1\le k\le K}$, respectively. The second term vanishes by integration by parts. Because $(\boldsymbol{P}_m)_m$ belongs to a finite-dimensional vector space, it converges up to the extraction of a subsequence; as $(\hat{\boldsymbol{x}}_m)_m$ is bounded in $\boldsymbol{L}^2(\Omega)$, it follows that $\lim_{m,n\to\infty}(\mathbb{e}\hat{\boldsymbol{x}}_{mn} \mid \boldsymbol{P}_{mn}) = 0$. Finally, regarding the first term, one finds, by integration by parts,

$$\begin{aligned}(\hat{\boldsymbol{x}}_{mn}|\boldsymbol{v}_{mn}) &= (\hat{\boldsymbol{x}}_{mn}|\,\mathbf{curl}(\hat{\mathbb{T}}\boldsymbol{w}_{mn})) = (\mathbf{curl}\,\hat{\boldsymbol{x}}_{mn}|\hat{\mathbb{T}}\boldsymbol{w}_{mn})\\ &\le 2\sup_m(\|\,\mathbf{curl}\,\hat{\boldsymbol{x}}_m\|)\,\|\hat{\mathbb{T}}\boldsymbol{w}_{mn}\|.\end{aligned}$$

Hence, $\lim_{m,n\to\infty}(\hat{\boldsymbol{x}}_{mn}|\boldsymbol{v}_{mn}) = 0$: $(\mathbb{e}\hat{\boldsymbol{x}}_m)_m$ converges in $\boldsymbol{L}^2(\Omega)$, and so does $(\hat{\boldsymbol{x}}_m)_m$. This ends the proof. ■

One finally concludes that the interface electric Helmholtz-like problem $(8.22)_0$ is well-posed in the Fredholm sense with the help of Theorem 4.5.7 (coercive+compact framework) and Theorem 4.5.10 (eigenvalues). Indeed, one may rewrite the sesquilinear form a of the problem (8.35) with identical arguments $\boldsymbol{w} \in \boldsymbol{K}_N(\Omega;\mathbb{e})$ as

$$a(\boldsymbol{w},\boldsymbol{w}) = \|\mathbb{\mu}^{-1/2}\,\mathbf{curl}\,\boldsymbol{w}\|^2 + \|\boldsymbol{w}\|^2 - \|\boldsymbol{w}\|^2 - \omega^2(\mathbb{e}\boldsymbol{w}|\boldsymbol{w}).$$

The last two terms are compact perturbations in $\boldsymbol{K}_N(\Omega;\mathbb{c})$ (see Theorem 8.4.5), while it holds that

$$\|\mathbb{\mu}^{-1/2}\,\mathbf{curl}\,\boldsymbol{w}\|^2 + \|\boldsymbol{w}\|^2 \geq \min(1,\mu_{max}^{-1})\|\boldsymbol{w}\|^2_{\boldsymbol{H}(\mathbf{curl},\Omega)}.$$

The conclusion follows.

Theorem 8.4.6 *Let Ω be a domain such that* $\mathbf{(Top)}_{I=0}$ *or* $\mathbf{(Top)}_{I>0}$ *is fulfilled and that can be partitioned into the non-trivial partition $\mathcal{P} := (\Omega_p)_{p=+,-}$, and define δ by $\delta = +1$ in Ω_+, $\delta = -1$ in Ω_-. Let $\mathbb{c}$ be a tensor field such that $\delta\,\mathbb{c}$ fulfills (5.10). Assume that (H_ε) holds and that the operator $\mathbb{T}$ of* (8.33) *also belongs to $\mathcal{L}(L^2(\Omega))$. Then, provided that ω^2 does not belong to a discrete set of $\mathbb{R}$, the interface electric Helmholtz-like problem is well-posed.*

One may further characterize the set of excluded values of ω^2, which corresponds, according to Theorem 4.5.10, to the set of eigenvalues λ of the electric eigenproblem[6] (8.6).
A priori, one has $\lambda \in \mathbb{C}$. Taking $\boldsymbol{v} = \boldsymbol{E}$ in (8.6) yields $\|\mathbb{\mu}^{-1/2}\,\mathbf{curl}\,\boldsymbol{E}\|^2 = \lambda(\mathbb{c}\boldsymbol{E}|\boldsymbol{E})$. If $\lambda = 0$, then $\mathbf{curl}\,\boldsymbol{E} = 0$ in Ω, i.e., $\boldsymbol{E} \in \boldsymbol{Z}_N(\Omega;\mathbb{c})$. Conversely, it is clear that $\boldsymbol{E} \in \boldsymbol{Z}_N(\Omega;\mathbb{c})$ is an eigenmode associated with $\lambda = 0$. If $\lambda \neq 0$, and in addition $(\mathbb{c}\boldsymbol{E}|\boldsymbol{E}) = 0$, one has $\boldsymbol{E} \in \boldsymbol{Z}_N(\Omega;\mathbb{c})$, but we know that $\boldsymbol{E} \in \boldsymbol{Z}_N(\Omega;\mathbb{c})$ is an eigenmode associated with $\lambda = 0$. Hence, for $\lambda \neq 0$, one automatically has $(\mathbb{c}\boldsymbol{E}|\boldsymbol{E}) \neq 0$, and it follows that $\lambda = (\mathbb{c}\boldsymbol{E}|\boldsymbol{E})^{-1}\|\mathbb{\mu}^{-1/2}\,\mathbf{curl}\,\boldsymbol{E}\|^2 \in \mathbb{R}$. So, all eigenvalues belong to $\mathbb{R}$. What is more, one can easily build two sequences $(\boldsymbol{v}_m^+)_m$ and $(\boldsymbol{v}_m^-)_m$, with $\boldsymbol{v}_m^+$ compactly supported in Ω_+, respectively $\boldsymbol{v}_m^-$ compactly supported in Ω_-, and furthermore,

$$\lim_{m\to\infty} \frac{\|\mathbb{\mu}^{-1/2}\,\mathbf{curl}\,\boldsymbol{v}_m^+\|^2}{(\mathbb{c}\boldsymbol{v}_m^+|\boldsymbol{v}_m^+)} = +\infty, \quad \lim_{m\to\infty} \frac{\|\mathbb{\mu}^{-1/2}\,\mathbf{curl}\,\boldsymbol{v}_m^-\|^2}{(\mathbb{c}\boldsymbol{v}_m^-|\boldsymbol{v}_m^-)} = -\infty.$$

To that aim, one uses elements of $\boldsymbol{D}(\Omega_+)$, respectively $\boldsymbol{D}(\Omega_-)$, with shrinking support, such that $(\mathbb{c}_\pm\boldsymbol{v}_m^\pm|\boldsymbol{v}_m^\pm) = \pm 1$ for all m, while $\lim_{m\to\infty}\|\mathbb{\mu}^{-1/2}\,\mathbf{curl}\,\boldsymbol{v}_m^\pm\| = +\infty$. One concludes that the set of excluded values of ω^2 is made of two sequences of real numbers, the first one composed of positive numbers whose limit is $+\infty$ and the second one composed of negative numbers whose limit is $-\infty$.

[6] The study of (8.6) in this setting is *physically irrelevant*. It is useful only for characterizing those excluded values of ω^2. As a matter of fact, in the model under scrutiny, the tensor field $\mathbb{c}$ is a function of ω for the Lorentz material in Ω_-. So, given ω, one first derives $\mathbb{c}_{|\Omega_-} = \hat{\mathbb{c}}_{d,L}(\omega)$, and then one checks whether or not $\lambda = \omega^2$ is an eigenvalue, that is, a solution to (8.6), with permittivity $\mathbb{c}$.

8.5 Comments

8.5.1 Compact imbeddings

The manner in which results are proven for fields with divergence(ε) or divergence(μ) in $L^2(\Omega)$ consists of a variation of the proofs given for fields with divergence in $L^2(\Omega)$ (see §3.2). This can be re-interpreted in an abstract framework. We refer to [77] for an illuminating discussion.
Let us mention one last compact imbedding result, for a function space whose elements fulfill mixed boundary conditions, in $\boldsymbol{L}^2(\Omega)$. More precisely, consider that the boundary Γ is equal to $\overline{\Gamma_1} \cup \overline{\Gamma_2}$, such that $\partial\Gamma_1$ and $\partial\Gamma_2$ are Lipschitz submanifolds of Γ, and define

$$\boldsymbol{Y}_{mix}(\Omega) := \{\boldsymbol{f} \in \boldsymbol{H}(\mathbf{curl}, \Omega) \cap \boldsymbol{H}(\mathrm{div}, \Omega) \,:\, \boldsymbol{f} \times \boldsymbol{n}_{|\Gamma_1} \in \boldsymbol{L}^2_t(\Gamma_1),\ \boldsymbol{f} \cdot \boldsymbol{n}_{|\Gamma_2} \in L^2(\Gamma_2)\}.$$

According to [110], one has $\boldsymbol{Y}_{mix}(\Omega) \subset_c \boldsymbol{L}^2(\Omega)$. It is also mentioned there that one has a similar result replacing $\boldsymbol{H}(\mathbf{curl}, \Omega) \cap \boldsymbol{H}(\mathrm{div}, \Omega)$ with $\boldsymbol{H}(\mathbf{curl}, \Omega) \cap \boldsymbol{H}(\mathrm{div}\, \mathfrak{k}, \Omega)$ for a tensor field $\mathfrak{k} = \xi\, \mathbb{I}_3$ that fulfills assumption (5.10) with piecewise smooth coefficient ξ defined on a partition of Ω.

8.5.2 Limiting amplitude principle

This principle was proposed by Eidus [105] to address the question of the time evolution of the solution to time-dependent equations, in the presence of time-harmonic data: does the solution adopt a time-harmonic behavior (for large times)? In a number of situations, this principle can be rigorously/mathematically proven. It turns out that, provided the data is compactly supported in space, the solution adopts a time-harmonic behavior as t goes to infinity, in bounded regions (of $\mathbb{R}^3$). We refer to [185, 134, 146] and references therein for the mathematical justifications obtained for models of wave propagation. There are exceptions, in particular, for the interface problems with sign-changing coefficients considered in §8.4. We refer to [71].

8.5.3 Diffraction problem

Solving diffraction problems (cf. §1.6), such as scattering from a bounded obstacle, is, in itself, a large subfield of electromagnetic theory. Many monographs have been devoted totally or partially to this topic: we refer the reader to [73, 87, 168, 165]. On the other hand, it is not the purpose of the present monograph to address this topic in great detail. We propose a very rough sketch below on the scattering from a bounded obstacle, which follows [165].
Let the perfectly conducting obstacle be denoted by O. It is assumed that O is a domain with connected boundary. The problem to be solved is set in the (connected) exterior domain $\mathbb{R}^3 \setminus \overline{\mathsf{O}}$, with pulsation $\omega > 0$. The medium is globally inhomogeneous, and homogeneous far away from the obstacle, that

is, $(\varepsilon,\mu)(\boldsymbol{x}) = (\varepsilon_0,\mu_0)$ for $|\boldsymbol{x}| > R_0$, for some $R_0 > 0$ such that $\overline{\mathtt{O}} \subset B(0,R_0)$. The impinging wave is determined by its electric field, denoted by $\boldsymbol{e}_{inc}$. It is governed by

$$-\omega^2\varepsilon_0\boldsymbol{e}_{inc} + \mathbf{curl}({\mu_0}^{-1}\,\mathbf{curl}\,\boldsymbol{e}_{inc}) = \boldsymbol{f} \text{ in } \mathbb{R}^3,$$

with $\boldsymbol{f}$ describing a current source (in free space). For instance, one has $\boldsymbol{f} = 0$ in the case of an impinging plane wave (cf. §1.2.2). Then, the total electric field $\boldsymbol{e}$, equal in $\mathbb{R}^3 \setminus \overline{\mathtt{O}}$ to the sum of the incident field $\boldsymbol{e}_{inc}$ and of the scattered field $\boldsymbol{e}_{sca}$, is governed by

$$\begin{aligned} &-\omega^2\varepsilon\boldsymbol{e} + \mathbf{curl}(\mu^{-1}\,\mathbf{curl}\,\boldsymbol{e}) = \boldsymbol{f} \text{ in } \mathbb{R}^3 \setminus \overline{\mathtt{O}},\\ &\boldsymbol{e} \times \boldsymbol{n}_{|\partial\mathtt{O}} = 0, \end{aligned}$$

plus an outgoing Silver–Müller radiation condition (1.144) on $\boldsymbol{e}_{sca}$, written as

$$\lim_{|\boldsymbol{x}|\to\infty} |\boldsymbol{x}|\Big(\mathbf{curl}\,\boldsymbol{e}_{sca} \times \frac{\boldsymbol{x}}{|\boldsymbol{x}|} - \imath\sqrt{\varepsilon_0\mu_0}\omega\boldsymbol{e}_{sca}\Big) = 0,$$

where the limit is uniform with respect to the directions $\boldsymbol{x}/|\boldsymbol{x}| \in \mathbb{S}^2$.
One has the existence result below, cf. Chapter 10 of [165]. [7]

Theorem 8.5.1 *Let $\mathtt{O}$ be a polyhedral domain with connected boundary. Let ε be piecewise smooth, respectively μ be piecewise constant, in $\mathbb{R}^3 \setminus \overline{\mathtt{O}}$. Assume that $\mathtt{O}$ is a perfectly conducting obstacle. Then, for every incident field $\boldsymbol{e}_{inc}$ that is analytic in any bounded region of $\mathbb{R}^3$, the diffraction problem has one, and only one, solution $\boldsymbol{e}$ in $\boldsymbol{H}_{loc}(\mathbf{curl}, \mathbb{R}^3 \setminus \overline{\mathtt{O}})$.*

Finally, one can prove that the solutions to the truncated exterior problem with scalar, strictly positive impedance Z_0 (see Theorem 8.3.11) approximate the exact solution well. Consider that $\boldsymbol{f} = 0$, and let $\boldsymbol{e}$ denote the solution to the exact diffraction problem. Denote by $\boldsymbol{e}_R$ the solution to the truncated diffraction problem set in $\Omega_R = (\mathbb{R}^3 \setminus \overline{\mathtt{O}}) \cap B(0,R)$ for $R \geq R_0$.
One has the convergence result hereafter, cf. Chapter 13 of [165]. Let $\tilde{\Omega}$ be a fixed domain contained in Ω_{R_0}. Then,

$$\|\boldsymbol{e} - \boldsymbol{e}_R\|_{\boldsymbol{H}(\mathbf{curl},\tilde{\Omega})} \leq \tilde{C}\,R^{-2},$$

where $\tilde{C} > 0$ is independent of R. Above, the value of $\tilde{C}$ may depend on $\tilde{\Omega}$.

8.5.4 Interface problem with sign-changing coefficients

The crucial assumption (H_ε) for solving the interface problem relies on the well-posedness of the scalar interface problem (8.32), with a sign-changing coefficient. This issue has been studied extensively in [57, 169, 54, 75], with

[7] When a field $\boldsymbol{g}$ belongs to $\boldsymbol{H}(\mathbf{curl}, \Omega' \setminus \overline{\mathtt{O}})$ for every open subset Ω' of every compact subset of $\mathbb{R}^3$ such that $\mathtt{O} \subset \Omega'$, one writes $\boldsymbol{g} \in \boldsymbol{H}_{loc}(\mathbf{curl}, \mathbb{R}^3 \setminus \overline{\mathtt{O}})$.

discussions regarding the (optimal) conditions on the contrast between the values of ε at the interface. In particular, it may happen that the interface problem is only well-posed in the Fredholm sense (see [54]).
In the electromagnetics framework, the situation in which the scalar problem (8.32) is only well-posed in the Fredholm sense is handled in [55, 56]. More generally, at the interface between a dielectric and a metamaterial, it may happen that both the electric permittivity and the magnetic permeability have a sign change. One may still achieve well-posedness in the Fredholm sense, or more precisely, establish that the operator associated with the sesquilinear form defining the problem is Fredholm of index 0 (again, see [55, 56]).

8.5.5 Resonances

The study of so-called *resonances* in plasmas constitutes a difficult and active field of research. Plasmas are generally highly inhomogeneous media; in the presence of a strong external magnetic field, they appear highly anisotropic as well [152]. Thus, the signs of the eigenvalues of $\mathbb{e}$, $\mathbb{p}$ vary from place to place, creating resonances at which they vanish. This is basically a sign-changing coefficients situation, but typically "worse" than the one studied in §8.4. In the presence of a small amount of absorption, i.e., a small imaginary part in the eigenvalues, the problem is well-posed [29], thanks to the argument used in §8.3.2. However, the limiting problem obtained when the absorption vanishes is much less well-behaved, at least for certain types of resonances: it is not even well-posed in $\boldsymbol{L}^2(\Omega)$, though one can construct by hand a very singular solution in simple settings [98]; there is no known framework to apply the Fredholm alternative, etc.

9

Dimensionally reduced models: derivation and analyses

In this chapter, we consider some special situations in which the three-dimensional (3D) Maxwell equations can be reformulated as two-dimensional (2D) models. More precisely, the computational domain boils down to a subset of $\mathbb{R}^2$, with respect to a suitable system of coordinates (cylindrical, spherical, cartesian). Nevertheless, the electric and magnetic fields, and other vector quantities, still belong to $\mathbb{R}^3$. Under suitable symmetry assumptions, one gets a single set of 2D equations or, equivalently, a single 2D variational formulation. In the general case, the electromagnetic field would be the solution to an infinite set of 2D equations, or variational formulations, obtained by Fourier analysis.

These simpler models are interesting in several ways. Firstly, they provide another class of approximate models to the original 3D Maxwell equations. Secondly, they are typically easier to solve and to implement than the original equations. And thirdly, they can provide useful frameworks for the accurate computation of the electromagnetic field, for instance when it is strong at some points [15, 16, 17, 18, 20, 21, 22, 81, 82, 83, 113, 114, etc.].

9.1 Two-and-a-half dimensional ($2\frac{1}{2}$D) models

In this first section, we consider the $2\frac{1}{2}$D reduced settings. By this phrase, we mean that the domain satisfies some special symmetry assumptions, but nothing is assumed *a priori* of the data. We will introduce two kinds of commonly used $2\frac{1}{2}$D settings: the axisymmetric one, in which the domain is invariant by rotation; and the prismatic one, in which the domain can be described as a cartesian product $\Omega = \omega \times]0, L[$ of a bounded subset of $\mathbb{R}^2$ by a bounded interval, or equivalently, as a truncated infinite cylinder. Section 9.2 will be devoted to the so-called 2D models, in which the domain *and the data* possess some special symmetries.

This approach can be very useful for modelling some real-life electromagnetic devices, as soon as their geometry:

- is at least close to a (truncated) infinite cylinder, or
- presents an axial symmetry, at least close to the axis.

Furthermore, geometries that are *locally* axisymmetric or prismatic can sometimes be replaced, as a first approximation, by *exactly* axisymmetric or prismatic ones, if the boundary effects can be neglected. Thus, from a modelling point of view, such a $2\frac{1}{2}$D setting can be viewed as an intermediate between a full three-dimensional problem and a two-dimensional one.

In this chapter, as in the previous ones, the object of our study will be the first-order Maxwell system in a domain Ω,

$$\varepsilon \frac{\partial \boldsymbol{E}}{\partial t} - \mathbf{curl}\, \boldsymbol{H} = -\boldsymbol{J}, \tag{9.1}$$

$$\mu \frac{\partial \boldsymbol{H}}{\partial t} + \mathbf{curl}\, \boldsymbol{E} = 0, \tag{9.2}$$

$$\operatorname{div}(\varepsilon \boldsymbol{E}) = \varrho, \tag{9.3}$$

$$\operatorname{div}(\mu \boldsymbol{H}) = 0, \tag{9.4}$$

completed with suitable initial and boundary conditions, and various derived systems, such as

- the electrostatic and magnetostatic systems obtained by setting $\partial_t \cdot = 0$ in (9.1)–(9.4);
- the equivalent systems of second order in time, as previously described at length (see Chapter 7). If we assume, as usual, that ε and μ do not depend on time, they write

$$\varepsilon \frac{\partial^2 \boldsymbol{E}}{\partial t^2} + \mathbf{curl}(\mu^{-1}\, \mathbf{curl}\ \boldsymbol{E}) = -\frac{\partial \boldsymbol{J}}{\partial t}, \tag{9.5}$$

$$\operatorname{div}(\varepsilon \boldsymbol{E}) = \varrho, \tag{9.6}$$

$$\mu \frac{\partial^2 \boldsymbol{H}}{\partial t^2} + \mathbf{curl}(\varepsilon^{-1}\, \mathbf{curl}\ \boldsymbol{H}) = \mathbf{curl}(\varepsilon^{-1} \boldsymbol{J}), \tag{9.7}$$

$$\operatorname{div}(\mu \boldsymbol{H}) = 0\,. \tag{9.8}$$

In this chapter, we shall write the material coefficients $\varepsilon,\ \mu$ as scalars. Nevertheless, many results remain valid for tensor-valued coefficients under certain conditions and with the necessary adaptations, which will be indicated when needed. For the sake of simplicity, we shall often consider the case of vacuum $\varepsilon = \varepsilon_0,\ \mu = \mu_0$, and work with the vector $\boldsymbol{B} = \mu \boldsymbol{H}$.

As far as the boundary conditions are concerned, we assume that the boundary Γ of Ω is made up of two parts: Γ_P and Γ_A, with $\Gamma_P \neq \emptyset$ the perfectly conducting boundary, and Γ_A (possibly empty) an artificial boundary introduced in order to close the domain, where one imposes a Silver–Müller boundary condition, cf. (5.20):

$$\boldsymbol{E} \times \boldsymbol{n} = 0 \quad \text{and} \quad \mu \boldsymbol{H} \cdot \boldsymbol{n} = 0, \text{ respectively } \boldsymbol{B} \cdot \boldsymbol{n} = 0 \quad \text{on } \Gamma_P, \tag{9.9}$$

$$\boldsymbol{E} \times \boldsymbol{n} + \sqrt{\frac{\mu}{\varepsilon}}\, \boldsymbol{H}_\top = \boldsymbol{g}^\star, \quad \text{respectively} \tag{9.10}$$

$$\boldsymbol{E} \times \boldsymbol{n} + c\, \boldsymbol{B}_\top = \boldsymbol{g}^\star \quad \text{on } \Gamma_A, \tag{9.11}$$

where $\boldsymbol{g}^\star \neq 0$ and $\boldsymbol{g}^\star = 0$ correspond, respectively, to the incoming and outgoing waves, cf. (1.137), (5.20). As usual, when $\Gamma_A \neq \emptyset$ (respectively $\Gamma_A = \emptyset$), we deal with an interior or exterior problem (respectively a cavity problem).

9.1.1 Axisymmetric domains

Geometry and cylindrical coordinates

We consider here an axisymmetric domain Ω of $\mathbb{R}^3$, generated by the rotation of a two-dimensional domain ω around the (Oz) axis. (To avoid some inconsistencies, we assume that ω lies entirely on one side of the (Oz) axis.) The boundary of the domain ω is denoted by $\partial\omega = \gamma_a \cup \gamma_b$, where $\gamma_a = \partial\omega \cap (Oz)$ may be empty, and $\gamma_b \neq \emptyset$ generates the boundary Γ of Ω (see Figure 9.1). The plane curve γ_b may be either closed, in which case $\gamma_a = \emptyset$, or open, in which case it is made of one or several connected component(s) whose extremities stand on (Oz) and γ_a of one or several segment(s) of (Oz) lying between these extremities.

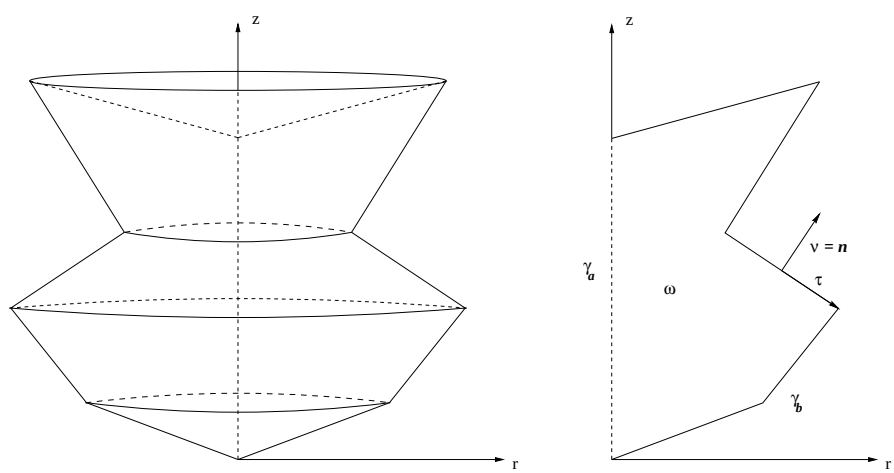

Fig. 9.1. Example of an axisymmetric domain Ω and its meridian section ω.

The natural coordinates for this type of domain are the cylindrical coordinates (r, θ, z), with the basis vectors $(\boldsymbol{e}_r, \boldsymbol{e}_\theta, \boldsymbol{e}_z)$. In these coordinates, a meridian half-plane is defined by the equation $\theta = \text{const.}$, and $(r, z) \in \mathbb{R}^2_+ := \mathbb{R}_+ \times \mathbb{R}$

correspond to cartesian coordinates in a half-plane. Denoting by $\mathbb{S}^1$ the unit circle, the cylindrical-to-cartesian mapping is defined as

$$\begin{aligned}\Phi : \mathbb{R}_+ \times \mathbb{S}^1 \times \mathbb{R} &\longrightarrow \mathbb{R}^3 \\ (r,\theta,z) &\longmapsto (x,y,z) = (r\,\cos\theta, r\,\sin\theta, z)\,;\end{aligned}$$

it is invertible, except at $r = 0$, which corresponds to the axis, and where the coordinate θ is undefined. Hence, we can write

$$\Omega = \Phi(\omega_a \times \mathbb{S}^1) = \Phi\left(\{(r,\theta,z) : \ (r,z) \in \omega_a, \ \theta \in \mathbb{S}^1\}\right),$$

with $\omega_a := \omega \cup \gamma_a$. The volume and surface elements are

$$\begin{cases} d\boldsymbol{x} = r\,dr\,d\theta\,dz \text{ in } \Omega \text{ or } \mathbb{R}^3, \\ d\omega = dr\,dz \text{ in } \omega_a \text{ or } \mathbb{R}^2_+ \simeq \text{a meridian half-plane.} \end{cases}$$

Any scalar field $\breve{v}$ defined on $\mathcal{O} \subset \mathbb{R}^3$ can be represented equivalently as $\breve{v}(x,y,z)$ or $v(r,\theta,z) = \breve{v} \circ \Phi(r,\theta,z)$ defined on $\Phi^{-1}(\mathcal{O}) \subset \mathbb{R}_+ \times \mathbb{S}^1 \times \mathbb{R}$. Similarly, for any vector field $\breve{\boldsymbol{v}}$,

$$\begin{aligned} &\breve{\boldsymbol{v}}(x,y,z) = \breve{v}_x(x,y,z)\,\boldsymbol{e}_x + \breve{v}_y(x,y,z)\,\boldsymbol{e}_y + \breve{v}_z(x,y,z)\,\boldsymbol{e}_z \\ &:= \boldsymbol{v}(r,\theta,z) = v_r(r,\theta,z)\,\boldsymbol{e}_r + v_\theta(r,\theta,z)\,\boldsymbol{e}_\theta + v_z(r,\theta,z)\,\boldsymbol{e}_z\,; \\ \text{where: } &v_r = v_x\,\cos\theta + v_y\,\sin\theta, \quad v_\theta = -v_x\,\sin\theta + v_y\,\cos\theta, \\ &\boldsymbol{e}_r = \boldsymbol{e}_x\,\cos\theta + \boldsymbol{e}_y\,\sin\theta, \quad \boldsymbol{e}_\theta = -\boldsymbol{e}_x\,\sin\theta + \boldsymbol{e}_y\,\cos\theta. \end{aligned}$$

In the following, we shall generally merge $\breve{\boldsymbol{v}}$ and $\boldsymbol{v}$ (and $\breve{v}$ and v as well): that is, we consider the fields as defined on some domain of the physical space $\mathbb{R}^3$, but express them as functions of the cylindrical coordinates, and give their components on the basis $(\boldsymbol{e}_r, \boldsymbol{e}_\theta, \boldsymbol{e}_z)$. With this convention, we can introduce the following important definition.

Definition 9.1.1 *For any vector field* $\boldsymbol{v} = v_r\,\boldsymbol{e}_r + v_\theta\,\boldsymbol{e}_\theta + v_z\,\boldsymbol{e}_z$, *let* $\mathbf{v}_m = v_r\,\boldsymbol{e}_r + v_z\,\boldsymbol{e}_z$. *Then,* $\mathbf{v}_m$ *and* v_θ *are respectively called* meridian *and* azimuthal *components of* $\boldsymbol{v}$.

Finally, we denote by $\boldsymbol{n} = (n_r, 0, n_z)$ the unit outward normal to Ω. Because of the symmetry, there is no θ-component, and the other two components are independent of θ. In a meridian half-plane, $\boldsymbol{\nu} = (n_r, n_z)$ is the unit outward normal to $\partial\omega$, and $\boldsymbol{\tau} = (n_z, -n_r)$ the unit tangential vector such that $(\boldsymbol{\tau}, \boldsymbol{\nu})$ is direct.

Differential operators and boundary conditions

In cylindrical coordinates, the formulas of the gradient, divergence and curl operators are given by, for a scalar field v and a vector field $\boldsymbol{v} = v_r\,\boldsymbol{e}_r + v_\theta\,\boldsymbol{e}_\theta + v_z\,\boldsymbol{e}_z$,

$$
\begin{aligned}
\mathbf{grad}\, v &= \frac{\partial v}{\partial r}\,\boldsymbol{e}_r + \frac{1}{r}\frac{\partial v}{\partial \theta}\,\boldsymbol{e}_\theta + \frac{\partial v}{\partial z}\,\boldsymbol{e}_z,\\
\operatorname{div} \boldsymbol{v} &= \frac{1}{r}\frac{\partial}{\partial r}(r\, v_r) + \frac{1}{r}\frac{\partial v_\theta}{\partial \theta} + \frac{\partial v_z}{\partial z},\\
\mathbf{curl}\, \boldsymbol{v} &= \left(\frac{1}{r}\frac{\partial v_z}{\partial \theta} - \frac{\partial v_\theta}{\partial z}\right)\boldsymbol{e}_r + \left(\frac{\partial v_r}{\partial z} - \frac{\partial v_z}{\partial r}\right)\boldsymbol{e}_\theta\\
&\quad + \frac{1}{r}\left(\frac{\partial}{\partial r}(r\, v_\theta) - \frac{\partial v_r}{\partial \theta}\right)\boldsymbol{e}_z.
\end{aligned}
$$

The scalar Laplacian of v is:

$$
\Delta v = \operatorname{div} \mathbf{grad}\, v = \frac{1}{r}\frac{\partial}{\partial r}(r\,\frac{\partial v}{\partial r}) + \frac{1}{r^2}\frac{\partial^2 v}{\partial \theta^2} + \frac{\partial^2 v}{\partial z^2}.
$$

The vector Laplacian can be computed with the formula $\Delta \boldsymbol{v} = \mathbf{grad}\operatorname{div}\boldsymbol{v} - \mathbf{curl}\,\mathbf{curl}\,\boldsymbol{v}$. Actually, we shall not need its expression in the general case.

We shall always assume that the distribution of boundary conditions on Γ also has an axial symmetry. In other words, γ_b is made up of two parts, γ_P (perfectly conducting) and γ_A (artificial), which are such that

$$
\Gamma_P = \Phi(\gamma_P \times \mathbb{S}^1), \qquad \Gamma_A = \Phi(\gamma_A \times \mathbb{S}^1).
$$

The boundary conditions (9.9)–(9.11) read as

$$
\mathbf{E}_m \cdot \boldsymbol{\tau} = 0, \quad E_\theta = 0, \quad \mu \mathbf{H}_m \cdot \boldsymbol{\nu} = 0, \text{ resp. } \mathbf{B}_m \cdot \boldsymbol{\nu} = 0 \quad \text{on } \Gamma_P, \tag{9.12}
$$

$$
-\mathbf{E}_m \cdot \boldsymbol{\tau} + \sqrt{\mu/\varepsilon}\, H_\theta = g_\theta^\star, \quad E_\theta + \sqrt{\mu/\varepsilon}\, \mathbf{H}_m \cdot \boldsymbol{\tau} = \mathbf{g}_m^\star \cdot \boldsymbol{\tau}, \tag{9.13}
$$

$$
\text{resp.} \quad -\mathbf{E}_m \cdot \boldsymbol{\tau} + c\, B_\theta = g_\theta^\star, \quad E_\theta + c\, \mathbf{B}_m \cdot \boldsymbol{\tau} = \mathbf{g}_m^\star \cdot \boldsymbol{\tau} \quad \text{on } \Gamma_A. \tag{9.14}
$$

9.1.2 Prismatic domains

Geometry

In this setting, we consider a 3D prismatic domain $\Omega = \omega \times]0, L[$, where ω is a domain in the (x, y) plane. Geometrically, the boundary $\partial\Omega$ of the prismatic domain is made of two parts: the *lateral surface* $\Gamma_{\text{lat}} := \partial\omega \times]0, L[$ and the *bases* $\Gamma_0 := \omega \times \{0\}$ and $\Gamma_L := \omega \times \{L\}$. Similarly to the axisymmetric setting, the component n_z of the normal vector $\boldsymbol{n}$ vanishes on Γ_{lat}; furthermore, n_x and n_y do not depend on z. The outward unit normal to $\partial\omega$ in the (x, y) plane is denoted $\boldsymbol{\nu}$, and $\boldsymbol{\tau}$ is the tangential vector such that $(\boldsymbol{\tau}, \boldsymbol{\nu})$ is direct. We have $\boldsymbol{\nu} = (n_x, n_y)$ and $\boldsymbol{\tau} = (n_y, -n_x)$. On the other hand, $\boldsymbol{n} = \pm \boldsymbol{e}_z$ on the bases.

In analogy with the axisymmetric setting, we take the following...

Definition 9.1.2 *For any vector field* $\boldsymbol{v} = v_x\, \boldsymbol{e}_x + v_y\, \boldsymbol{e}_y + v_z\, \boldsymbol{e}_z$, *let* $\mathbf{v}_\perp = v_x\, \boldsymbol{e}_x + v_y\, \boldsymbol{e}_y$. *Then,* $\mathbf{v}_\perp$ *and* v_z *are respectively called* transversal *and* longitudinal *components of* $\boldsymbol{v}$.

We now consider the boundary conditions. On the lateral surface, we assume that the distribution of perfectly conducting and Silver–Müller boundary conditions is invariant by translation. As for the bases, we assume that the distribution of boundary conditions is identical on both, i.e., the perfectly conducting parts of Γ_0 and Γ_L are translations of each other, and similarly for the Silver–Müller parts. In other words, there exist partitions of the transversal domain ω and its boundary $\gamma = \partial\omega$:

$$\omega = \omega_P \cap \omega_A, \quad \gamma = \gamma_P \cup \gamma_A,$$

up to negligible sets, such that the 3D boundaries Γ_P and Γ_A are described as

$$\begin{aligned}
&\Gamma_P = \Gamma_P^0 \cup \Gamma_P^L \cup \Gamma_P^{\mathrm{lat}}, \quad \Gamma_A = \Gamma_A^0 \cup \Gamma_A^L \cup \Gamma_A^{\mathrm{lat}}, \quad \text{where:}\\
&\Gamma_P^0 := \omega_P \times \{0\}, \quad \Gamma_P^L := \omega_P \times \{L\}, \quad \Gamma_P^{\mathrm{lat}} := \gamma_P \times]0, L[\,;\\
&\Gamma_A^0 := \omega_A \times \{0\}, \quad \Gamma_A^L := \omega_A \times \{L\}, \quad \Gamma_A^{\mathrm{lat}} := \gamma_A \times]0, L[\,.
\end{aligned}$$

The conditions (9.9)–(9.11) read as

$$\mathbf{E}_\perp \cdot \boldsymbol{\tau} = 0, \quad E_z = 0, \quad \mu \mathbf{H}_\perp \cdot \boldsymbol{\nu} = 0, \text{ resp. } \mathbf{B}_\perp \cdot \boldsymbol{\nu} = 0 \quad \text{on } \Gamma_P^{\mathrm{lat}}, \tag{9.15}$$

$$E_x = 0, \quad E_y = 0, \quad \mu H_z = 0, \text{ resp. } B_z = 0, \quad \text{on } \Gamma_P^0 \cup \Gamma_P^L\,; \tag{9.16}$$

$$\mathbf{E}_\perp \cdot \boldsymbol{\tau} + \sqrt{\mu/\varepsilon}\, H_z = g_z^\star, \quad -E_z + \sqrt{\mu/\varepsilon}\, \mathbf{H}_\perp \cdot \boldsymbol{\tau} = \mathbf{g}_\perp^\star \cdot \boldsymbol{\tau}, \tag{9.17}$$

$$\text{resp.} \quad \mathbf{E}_\perp \cdot \boldsymbol{\tau} + c\, B_z = g_z^\star, \quad -E_z + c\, \mathbf{B}_\perp \cdot \boldsymbol{\tau} = \mathbf{g}_\perp^\star \cdot \boldsymbol{\tau} \quad \text{on } \Gamma_A^{\mathrm{lat}}, \tag{9.18}$$

$$-\mathbf{E}_\perp \times \mathbf{e}_z + \sqrt{\mu/\varepsilon}\, \mathbf{H}_\perp = \mathbf{g}_\perp^\star, \text{ resp. } -\mathbf{E}_\perp \times \mathbf{e}_z + c\, \mathbf{B}_\perp = \mathbf{g}_\perp^\star \quad \text{on } \Gamma_A^0, \tag{9.19}$$

$$\mathbf{E}_\perp \times \mathbf{e}_z + \sqrt{\mu/\varepsilon}\, \mathbf{H}_\perp = \mathbf{g}_\perp^\star, \text{ resp. } \mathbf{E}_\perp \times \mathbf{e}_z + c\, \mathbf{B}_\perp = \mathbf{g}_\perp^\star \quad \text{on } \Gamma_A^L. \tag{9.20}$$

Prismatic domains may also come up in a slightly different setting, which we will call *prismatic-periodic*. In this case, the physical domain of interest is an infinite cylinder $\omega \times \mathbb{R}$, where ω is a domain in the (x, y) plane, as above. If all the phenomena are periodic in the z coordinate, with a space period L, they can be modelled and simulated using the domain $\Omega = \omega \times]0, L[$, with periodic boundary conditions (in a suitable sense) imposed on the bases.[1] On

[1] The reader may have noticed that an infinite cylinder is not a bounded domain, and thus does not belong in the framework usually adopted in this book. In particular, the various Sobolev compact imbedding theorems do not hold. Furthermore, the periodicity assumption is inconsistent with the finite energy condition. This undermines *a priori* the well-posedness results of Chapters 5–8. More pragmatically, the prismatic-periodic setting may be viewed as an idealisation of the propagation of fields with wavelength L in a cylinder of length much greater than L, provided the boundary effects can be neglected. Under these circumstances, it is reasonable to assume that the energy is finite on a period Ω; this validates *a posteriori* the analyses of Chapters 5–8, which can be easily transposed to the case of periodic boundary conditions in z. If we remove the periodicity condition, and replace it, e.g., with the requirement that the energy be globally finite, there is a "continuous spectrum" phenomenon that cannot be handled through the methods in this book.

the other hand, the boundary conditions on the physical boundary $\partial\omega \times \mathbb{R}$ are treated as above, e.g., the perfect conductor condition is expressed as (9.15).

9.2 Two-dimensional (2D) models

We now consider the 2D reduced models encountered when the domain, as well as the data, verifies some symmetry assumptions. As in Section 9.1, we will introduce two commonly used 2D models. The *fully axisymmetric* model corresponds to an axisymmetric domain (as in §9.1.1) with axisymmetric data (precise definition below). It can describe, for instance, a beam of charged particles close to its axis: the axis of rotation is the beam axis. The *plane* model corresponds to an infinite cylinder $\omega \times \mathbb{R}$ with data invariant by translation.[2]

On the deepest level, symmetry by translation or rotation is best understood from a group-theoretical point of view. However, having applications in mind, we shall be mainly interested in its "practical" consequences, namely all derivatives in the invariant direction (θ in the fully axisymmetric model and z in the plane model) vanish.

Much of the next three subsections is taken from [45, §§1.2.a & 1.2.b], with little or no change. The treatment has been generalised to the case of any group of symmetry (thus including translations and rotations of given axis), as well as time-dependent problems. The reader interested in a practical approach alone may skip to §9.2.3.

9.2.1 Geometric and group-theoretical definitions

We call $\mathcal{R}_\eta$ the rotation of axis (Oz) and angle $\eta \in \mathbb{S}^1$, while $\mathcal{T}_\eta$ is the translation of vector $\eta\, \boldsymbol{e}_z$, for $\eta \in \mathbb{R}$:

$$\forall (x,y,z) \in \mathbb{R}^3,\ \mathcal{R}_\eta(x,y,z) := (x\,\cos\eta - y\,\sin\eta, x\,\sin\eta + y\,\cos\eta, z)\,;$$
$$\mathcal{T}_\eta(x,y,z) := (x,y,\eta+z).$$

The two kinds of operators share a basic feature. Much as $\mathcal{T}_\eta$ is a shift of the *applicate* (the coordinate z), a rotation viewed in cylindrical coordinates appears as a shift of the azimuth. If we define the mapping

$$\begin{aligned} \mathcal{S}_\eta : \mathbb{R}_+ \times \mathbb{S}^1 \times \mathbb{R} &\longrightarrow \mathbb{R}_+ \times \mathbb{S}^1 \times \mathbb{R} \\ (r,\theta,z) &\longmapsto (r,\eta+\theta,z), \end{aligned}$$

[2] This is, once more, inconsistent with the finite energy condition (see footnote [1]). But we shall see that the invariance allows one to work in the "usual" function spaces defined on the transversal section ω, provided a local finiteness condition is satisfied.

where + here denotes the group law of $\mathbb{S}^1$ (addition modulo 2π), and recall the cylindrical-to-cartesian mapping Φ from §9.1.1, we have[3]

$$\mathcal{R}_\eta = \Phi \circ \mathcal{S}_\eta \circ \Phi^{-1}.$$

More deeply, both families of operators form (one-parameter) groups of linear isomorphisms:

$$\forall \zeta, \eta \in \mathbb{S}^1 \text{ respectively } \mathbb{R}, \quad \mathcal{R}_\eta \circ \mathcal{R}_\zeta = \mathcal{R}_{\eta+\zeta}, \quad \text{respectively} \quad \mathcal{T}_\eta \circ \mathcal{T}_\zeta = \mathcal{T}_{\eta+\zeta}.$$

In a more general setting, we suppose we are given an underlying Abelian group G, and a morphism of groups: $\eta \mapsto \mathcal{G}_\eta$ from G to $\mathcal{GL}(\mathbb{R}^3)$, the group of linear isomorphisms of $\mathbb{R}^3$. Moreover, we assume there is a system of coordinates adapted to the orbits of the symmetry group $(\mathcal{G}_\eta)_\eta$, i.e., a bijective and bi-continuous mapping defined in (say) a dense open subset $\mathcal{O} \subset \mathbb{R}^3$:

$$\begin{aligned} \Psi : \mathcal{O} &\longrightarrow \mathsf{S} \times \mathsf{G} \\ \boldsymbol{x} &\longmapsto (\mathbf{x}, \zeta), \end{aligned} \tag{9.21}$$

where S is a suitable manifold, and such that the following identity holds:

$$\forall \eta, \quad \mathcal{G}_\eta = \Psi^{-1} \circ \mathcal{S}_\eta \circ \Psi, \quad \text{where:} \quad \mathcal{S}_\eta(\mathbf{x}, \zeta) := (\mathbf{x}, \zeta + \eta). \tag{9.22}$$

We shall denote by Φ the cartesian-to-adapted coordinate change for functions:

$$\Phi(\check{v}) = \check{v} \circ \Psi^{-1}, \quad \Phi^{-1}(v) = v \circ \Psi, \tag{9.23}$$

for any function $\check{v}$, respectively v, defined on a subset of $\mathbb{R}^3$, respectively $\mathsf{S} \times \mathsf{G}$.

In order to obtain a dimension reduction, we shall suppose that the underlying group G is continuous, and typically one-dimensional. The same holds for the symmetry group $(\mathcal{G}_\eta)_\eta$ and its orbits; thus, $\dim \mathsf{S} < 3$ (typically $\dim \mathsf{S} = 2$). However, the following arguments hold for a discrete group, in which case S is a three-dimensional set: half-space, octant, period, etc.

Symmetry properties of scalar and vector fields

Symmetry groups have natural actions on scalar and vector fields defined on $\mathbb{R}^3$: the right-action of $\mathcal{G}_\eta$ on $\check{v}$ is $\check{v} \circ \mathcal{G}_\eta$. This definition extends naturally to functions defined on a domain $\Omega \subset \mathbb{R}^3$, provided the domain itself is invariant under the action of the group $(\mathcal{G}_\eta)_\eta$ (we shall say $(\mathcal{G}_\eta)_\eta$-*invariant*), i.e., $\forall \boldsymbol{x} \in \Omega,\ \forall \eta \in \mathsf{G},\ \mathcal{G}_\eta(\boldsymbol{x}) \in \Omega$. Equivalently, such a domain can be characterised in the adapted coordinates of (9.21) as

$$\Psi(\Omega \cap \mathcal{O}) = \omega \times \mathsf{G}, \quad \text{for some } \omega \subset \mathsf{S}.$$

As natural examples, the axisymmetric domain of §9.1.1 is $(\mathcal{R}_\eta)_\eta$-invariant, and the infinite cylinder of §9.1.2 is $(\mathcal{T}_\eta)_\eta$-invariant.

[3] The coordinate θ and the mapping Φ^{-1} are undefined on the axis (Oz). On the other hand, the restriction of $\mathcal{R}_\eta$ and $\mathcal{S}_\eta$ to the axis is the identity. This allows for a smooth interpretation of the formula on all $\mathbb{R}^3$.

Definition 9.2.1 *Let $\Omega \subset \mathbb{R}^3$ be a $(\mathcal{G}_\eta)_\eta$-invariant domain. The right-action of the mapping $\mathcal{G}_\eta$ on a distribution $\breve{T} \in \mathcal{D}'(\Omega)$ is*

$$\forall \varphi \in \mathcal{D}(\Omega), \quad \left\langle \breve{T} \circ \mathcal{G}_\eta, \breve{\varphi} \right\rangle = \left\langle \breve{T}, \breve{\varphi} \circ \mathcal{G}_\eta^{-1} \right\rangle.$$

The distribution $\breve{T}$ is said to be $(\mathcal{G}_\eta)_\eta$-invariant *if, and only if,*

$$\forall \eta \in \mathsf{G}, \quad \breve{T} \circ \mathcal{G}_\eta = \breve{T}.$$

The space of such distributions will be denoted $\breve{\mathcal{D}}'(\Omega)$.

Under the assumption (9.22), we see that this means that $(\mathcal{G}_\eta)_\eta$-invariant functions are independent of ζ when expressed in adapted coordinates.

Proposition 9.2.2 *Let $\Omega \subset \mathbb{R}^3$ be a $(\mathcal{G}_\eta)_\eta$-invariant domain. The function $\breve{f}(x, y, z) \in L^1_{\mathrm{loc}}(\Omega)$ is $(\mathcal{G}_\eta)_\eta$-invariant if, and only if, $f := \Phi^{-1}(\breve{f})$ is independent of ζ. Thus, $\partial_\zeta f = 0$; this extends to distributions by duality.*

As particular cases:

- $\breve{f}(x, y, z)$ is invariant by translation if, and only if, it is independent of z, i.e., $\partial_z f = 0$.
- $\breve{f}(x, y, z)$ is invariant by rotation if, and only if, its cylindrical version $f = \breve{f} \circ \Phi$ is independent of θ. Thus, $\partial_\theta f = 0$.

Moreover, these properties also hold for the expression of $\breve{f}$ in any adapted coordinate system. In the translational (respectively rotational) case, adapted systems are made up of the applicate z and some coordinate system in the transversal (x, y) plane, respectively, the azimuth θ and some coordinate system in a meridian half-plane.

Let us now examine the case of vector fields, indispensable for handling Maxwell's equations. The above notion of invariance is sufficient for the translational case: obviously, a vector field is invariant by translation if, and only if, its cartesian coordinates are as well. However, in the rotational case, we shall need the following:

Definition 9.2.3 *Let $\Omega \subset \mathbb{R}^3$ be a $(\mathcal{G}_\eta)_\eta$-invariant domain and $\breve{\boldsymbol{T}} \in \boldsymbol{D}'(\Omega)$ a vector-valued distribution. The left-action of $\mathcal{G}_\eta$ on $\breve{\boldsymbol{T}}$ is defined as*

$$\forall \boldsymbol{\varphi} \in \boldsymbol{D}(\Omega), \quad \left\langle \mathcal{G}_\eta \circ \breve{\boldsymbol{T}}, \breve{\boldsymbol{\varphi}} \right\rangle = \left\langle \breve{\boldsymbol{T}}, \mathcal{G}_\eta^{-1} \circ \breve{\boldsymbol{\varphi}} \right\rangle.$$

Then, $\breve{\boldsymbol{T}}$ is said to be contravariant under the action of the group $(\mathcal{G}_\eta)_\eta$, *or* $(\mathcal{G}_\eta)_\eta$-contravariant *if, and only if,*

$$\forall \eta \in \mathsf{G}, \quad \breve{\boldsymbol{T}} \circ \mathcal{G}_\eta = \mathcal{G}_\eta \circ \breve{\boldsymbol{T}}.$$

The space of such distributions will be denoted $\breve{\boldsymbol{D}}'(\Omega)$.

Then, we have the following fundamental result [45, p. 33]:

Proposition 9.2.4 *Let $\breve{\boldsymbol{f}} \in L^1_{\mathrm{loc}}(\Omega)^3$, with Ω invariant by rotation. Then, $\breve{\boldsymbol{f}}$ is contravariant by rotation if, and only if, its cylindrical components $\breve{f}_r = \breve{f}_x \cos\theta + \breve{f}_y \sin\theta$, $\breve{f}_\theta = -\breve{f}_x \sin\theta + \breve{f}_y \cos\theta$ and $\breve{f}_z$ are invariant by rotation. This property readily extends to distributions.*

Actually, this statement is a particular case of Proposition 9.2.9 below. It can be generalised to any symmetry group $(\mathcal{G}_\eta)_\eta$, using adapted coordinates.

Symmetries of differential operators

Now, we turn to the symmetry properties of differential and boundary operators. Let Ω be a $(\mathcal{G}_\eta)_\eta$-invariant domain. In the rest of this section, we take the following notations:

- $\breve{A}$ is an $M \times M$ system of interior differential operators, i.e., an operator that transforms a function from Ω to $\mathbb{R}^M$ into another function from Ω to $\mathbb{R}^M$.
- $\breve{B}$ is an $m \times M$ system of interior or boundary differential operators, i.e., an operator that transforms a function from Ω to $\mathbb{R}^M$ into a function from Ω (or $\partial\Omega$) to $\mathbb{R}^m$.

Definition 9.2.5 *The operator $\breve{B}$, respectively the couple $(\breve{A}, \breve{B})$ is said to be* $(\mathcal{G}_\eta)_\eta$-symmetric *if, and only if, for all $\eta \in \mathsf{G}$, there exist a linear isomorphism $\mathcal{I}_\eta$ from $\mathbb{R}^M$ to itself, and a linear isomorphism $\mathcal{J}_\eta$ from $\mathbb{R}^m$ to itself, such that any smooth function $\breve{v}$ from Ω to $\mathbb{R}^M$ satisfies*

$$\begin{aligned} \breve{A}\left(\mathcal{I}_\eta\left(\breve{v} \circ \mathcal{G}_\eta\right)\right) &= \mathcal{I}_\eta\left(\left(\breve{A}\,\breve{v}\right) \circ \mathcal{G}_\eta\right) ; \\ \breve{B}\left(\mathcal{I}_\eta\left(\breve{v} \circ \mathcal{G}_\eta\right)\right) &= \mathcal{J}_\eta\left(\left(\breve{B}\,\breve{v}\right) \circ \mathcal{G}_\eta\right). \end{aligned} \tag{9.24}$$

If $(\mathcal{G}_\eta)_\eta$ is the group of rotations $(\mathcal{R}_\eta)_\eta$, we will call the operator $\breve{B}$, respectively the couple $(\breve{A}, \breve{B})$ axisymmetric.

In the case $M = 1$ of a scalar unknown, $\mathcal{I}_\eta$ is nothing but the multiplication by a constant, so the first condition in (9.24) reduces to $\breve{A}(\breve{v} \circ \mathcal{G}_\eta) = (\breve{A}\,\breve{v}) \circ \mathcal{G}_\eta$. Similarly, if $\breve{B}$ is a scalar operator ($m = 1$), the second condition in (9.24) reduces to $\breve{B}(\breve{v} \circ \mathcal{G}_\eta) = (\breve{B}\,\breve{v}) \circ \mathcal{G}_\eta$. This leads naturally to the following definitions for general values of M and m.

Definition 9.2.6 *The operator $\breve{B}$, respectively the couple $(\breve{A}, \breve{B})$ is said to be* $(\mathcal{G}_\eta)_\eta$-invariant *if, and only if, for all η and any smooth function $\breve{v}$ from Ω to $\mathbb{R}^M$, it holds that*

$$\breve{A}(\breve{v} \circ \mathcal{G}_\eta) = (\breve{A}\,\breve{v}) \circ \mathcal{G}_\eta\,; \quad \breve{B}(\breve{v} \circ \mathcal{G}_\eta) = (\breve{B}\,\breve{v}) \circ \mathcal{G}_\eta.$$

Equivalently, one can examine the expression of the differential operators in adapted coordinates, where Φ is defined in (9.23).

$$\tilde{A} = \Phi \circ \breve{A} \circ \Phi^{-1}, \quad \tilde{B} = \Phi \circ \breve{B} \circ \Phi^{-1} \tag{9.25}$$

The $(\mathcal{G}_\eta)_\eta$-invariance of $(\breve{A}, \breve{B})$ is equivalent to the independence of the coefficients of $(\tilde{A}, \tilde{B})$ from the coordinate ζ:

$$\left\{\breve{A}, \breve{B}\right\}(\boldsymbol{x}; \partial_{\boldsymbol{x}}) = \left\{\tilde{A}, \tilde{B}\right\}(\mathbf{x}; \partial_{\mathbf{x}}, \partial_\zeta).$$

For instance, the operators $(\breve{A}, \breve{B})$ are invariant by translation if, and only if, their coefficients (in cartesian coordinates) do not depend on z; they are invariant by rotation if, and only if, they have coefficients independent of θ when expressed in cylindrical coordinates:

$$\left\{\breve{A}, \breve{B}\right\}(x, y, z; \partial_x, \partial_y, \partial_z) = \left\{\tilde{A}, \tilde{B}\right\}(r, z; \partial_r, \partial_\theta, \partial_z).$$

A basic example is the Laplace operator

$$\Delta = \partial_x^2 + \partial_y^2 + \partial_z^2 = \partial_r^2 + r^{-1}\,\partial_r + r^{-2}\,\partial_\theta^2 + \partial_z^2.$$

Dirichlet and Neumann boundary conditions or, more generally, conditions that only depend on the normal derivative ∂_n are invariant by translation (respectively by rotation), provided the domain Ω is as well.

Let us now examine the usual differential operators, gradient, divergence and curl. In the translational case, one immediately checks that they are invariant by translation:

$$\begin{aligned}
&\mathbf{grad}\,(\breve{v} \circ \mathcal{T}_\eta) = (\mathbf{grad}\,\breve{v}) \circ \mathcal{T}_\eta,\\
&\operatorname{div}(\breve{\boldsymbol{v}} \circ \mathcal{T}_\eta) = (\operatorname{div}\breve{\boldsymbol{v}}) \circ \mathcal{T}_\eta, \quad \mathbf{curl}\,(\breve{\boldsymbol{v}} \circ \mathcal{T}_\eta) = (\mathbf{curl}\,\breve{\boldsymbol{v}}) \circ \mathcal{T}_\eta.
\end{aligned}$$

If the domain is invariant by translation, so is the normal vector $\breve{\boldsymbol{n}}$; thus, the boundary operators

$$\breve{\boldsymbol{v}} \mapsto \{\breve{\boldsymbol{v}} \cdot \breve{\boldsymbol{n}},\ \breve{\boldsymbol{v}} \times \breve{\boldsymbol{n}},\ \mathbf{curl}\,\breve{\boldsymbol{v}} \times \breve{\boldsymbol{n}}\}, \tag{9.26}$$

and so on, are invariant by translation.

The picture is more interesting in the rotational case. Consider a smooth enough scalar field $\breve{v}$, and an arbitrary constant vector $\breve{\boldsymbol{e}}_0 \in \mathbb{R}^3$. Recall (cf. §1.5.1) that the gradient of $\breve{v}$ is defined from its differential (or tangent linear mapping) by:

$$\mathbf{grad}\,\breve{v}(\boldsymbol{x}) \cdot \breve{\boldsymbol{e}}_0 = D\breve{v}(\boldsymbol{x}) \bullet \breve{\boldsymbol{e}}_0,$$

where $\bullet$ denotes the duality product between primal and dual three-dimensional vectors. As the rotation $\mathcal{R}_\eta$ is linear, the chain rule gives us

$$[D(\breve{v} \circ \mathcal{R}_\eta)(\boldsymbol{x})] \bullet \breve{\boldsymbol{e}}_0 = [D\breve{v}(\mathcal{R}_\eta \boldsymbol{x}) \circ \mathcal{R}_\eta] \bullet \breve{\boldsymbol{e}}_0 = D\breve{v}(\mathcal{R}_\eta \boldsymbol{x}) \bullet \mathcal{R}_\eta \breve{\boldsymbol{e}}_0$$
$$= \mathbf{grad}\, \breve{v}(\mathcal{R}_\eta \boldsymbol{x}) \cdot \mathcal{R}_\eta \breve{\boldsymbol{e}}_0 = \mathcal{R}_{-\eta}(\mathbf{grad}\, \breve{v}(\mathcal{R}_\eta \boldsymbol{x})) \cdot \breve{\boldsymbol{e}}_0.$$

We have thus proved the identity:

$$\mathbf{grad}\, (\breve{v} \circ \mathcal{R}_\eta) = \mathcal{R}_{-\eta} \left[(\mathbf{grad}\, \breve{v}) \circ \mathcal{R}_\eta \right],$$

so the gradient is *axisymmetric* (i.e., $(\mathcal{R}_\eta)_\eta$-symmetric) with $\mathcal{I}_\eta = \mathsf{Id}$ and $\mathcal{J}_\eta = \mathcal{R}_{-\eta}$. Similarly, let $\breve{\boldsymbol{v}}$ be a smooth enough vector field. Using the following definitions of the divergence by duality, and of the curl as in §1.5.1:

$$\langle \operatorname{div} \breve{\boldsymbol{v}}, \breve{\varphi} \rangle = \langle \breve{\boldsymbol{v}}, \mathbf{grad}\, \breve{\varphi} \rangle, \quad \forall \breve{\varphi} \in \mathcal{D}(\breve{\Omega}),$$
$$(\mathbf{curl}\, \breve{\boldsymbol{v}}) \cdot \breve{\boldsymbol{e}}_0 = \operatorname{div}(\breve{\boldsymbol{v}} \times \breve{\boldsymbol{e}}_0), \quad \forall \breve{\boldsymbol{e}}_0 \in \mathbb{R}^3 \text{ constant},$$

as well as the usual properties

$$(\mathcal{R}_\eta \breve{\boldsymbol{a}}) \cdot (\mathcal{R}_\eta \breve{\boldsymbol{b}}) = \breve{\boldsymbol{a}} \cdot \breve{\boldsymbol{b}}, \quad (\mathcal{R}_\eta \breve{\boldsymbol{a}}) \times (\mathcal{R}_\eta \breve{\boldsymbol{b}}) = \mathcal{R}_\eta(\breve{\boldsymbol{a}} \times \breve{\boldsymbol{b}}), \quad \forall \breve{\boldsymbol{a}},\ \breve{\boldsymbol{b}} \in \mathbb{R}^3, \tag{9.27}$$

we arrive at

$$\operatorname{div} \left[\mathcal{R}_{-\eta} \left(\breve{\boldsymbol{v}} \circ \mathcal{R}_\eta \right) \right] = (\operatorname{div} \breve{\boldsymbol{v}}) \circ \mathcal{R}_\eta,$$
$$\mathbf{curl} \left[\mathcal{R}_{-\eta} \left(\breve{\boldsymbol{v}} \circ \mathcal{R}_\eta \right) \right] = \mathcal{R}_{-\eta} \left[(\mathbf{curl}\, \breve{\boldsymbol{v}}) \circ \mathcal{R}_\eta \right].$$

Thus, these operators are axisymmetric with $\mathcal{I}_\eta = \mathcal{R}_{-\eta}$ and (for the divergence) $\mathcal{J}_\eta = \mathsf{Id}$. With these results, one sees again that the scalar Laplacian $\Delta = \operatorname{div} \mathbf{grad}$ is invariant by rotation. On the other hand, the double curl $\mathbf{curl}\,\mathbf{curl}$ and the vector Laplacian $\Delta = \mathbf{grad} \operatorname{div} - \mathbf{curl}\,\mathbf{curl}$ are axisymmetric with $\mathcal{I}_\eta = \mathcal{R}_{-\eta}$. With the identities (9.27), we check that the vector boundary operators (9.26) are axisymmetric.

9.2.2 Symmetric problems with symmetric data

Let us consider a boundary-value problem of the form

$$\breve{A}\, \breve{u} = \breve{f} \text{ in } \Omega, \quad \breve{B}\, \breve{u} = \breve{g} \text{ on } \partial\Omega; \tag{9.28}$$

or an initial-boundary-value problem, which we may cast in the general form

$$\begin{cases} \partial_t \breve{u} + \breve{A}\, \breve{u} = \breve{f} \text{ in } (0,T) \times \Omega, \quad \breve{B}\, \breve{u} = \breve{g} \text{ on } (0,T) \times \partial\Omega, \\ \breve{u}(0, \boldsymbol{x}) = \breve{u}^0(\boldsymbol{x}) \text{ in } \Omega. \end{cases} \tag{9.29}$$

The framework of (9.28) contains all types of elliptic, saddle-point or Helmholtz-like problems envisaged in §§4.2 and 4.5, while (9.29) covers various evolution problems (of parabolic or hyperbolic type, see §1.5.2) of §4.3. The time-dependent problems with constraints (such as (4.20)) envisaged in this book do not need a special discussion: as seen in the proof of Theorem 4.3.19, they can be decomposed into one unconstrained evolution problem and two static problems with time-dependent data.

In order to study the influence of symmetry on evolution problems, we take the following self-evident conventions. For any time-dependent scalar or vector-valued function $\breve{v}$, one defines the right-action $\breve{v} \circ \mathcal{G}_\eta : (t, \boldsymbol{x}) \mapsto \breve{v}(t, \mathcal{G}_\eta(\boldsymbol{x}))$. Similarly, for a time-dependent vector field $\breve{\boldsymbol{v}}$, the left-action $\mathcal{G}_\eta \circ \boldsymbol{v}$. This is extended to distributions by duality (as in Definitions 9.2.1 and 9.2.3), and allows one to apply the notions of invariance and contravariance to time-dependent scalar- and vector-valued distributions. As usual, we shall use the notation $\breve{v}(t)$ to designate the function $\boldsymbol{x} \mapsto \breve{v}(t, \boldsymbol{x})$ defined on Ω, for any function $\breve{v}$ defined on $(0, T) \times \Omega$. Thus, the statement "$\breve{v}$ is invariant (respectively contravariant) under the action of the group $(\mathcal{G}_\eta)_\eta$" means "$\forall t$, $\breve{v}(t)$ is invariant (respectively contravariant) under the action of the group $(\mathcal{G}_\eta)_\eta$".

The fundamental result on *invariant* problems is the following.

Proposition 9.2.7 *Assume that the domain Ω and the operators $(\breve{A}, \breve{B})$ are $(\mathcal{G}_\eta)_\eta$-invariant. Then:*

1. *If a solution $\breve{u}$ to* (9.28)*, respectively* (9.29)*, is $(\mathcal{G}_\eta)_\eta$-invariant, so are the data $(\breve{f}, \breve{g})$, respectively $(\breve{f}, \breve{g}, \breve{u}^0)$.*
2. *Conversely, if $(\breve{f}, \breve{g})$, respectively $(\breve{f}, \breve{g}, \breve{u}^0)$, are $(\mathcal{G}_\eta)_\eta$-invariant and* (9.28)*, respectively* (9.29)*, has,* at most*, one solution $\breve{u}$ in the suitable function space, then this solution is invariant.*

Proof. As a consequence of Definition 9.2.6, one sees that, if $\breve{u}$ is a solution to (9.28) with data $(\breve{f}, \breve{g})$, then for any η, $\breve{u} \circ \mathcal{G}_\eta$ is a solution corresponding to the data $(\breve{f} \circ \mathcal{G}_\eta, \breve{g} \circ \mathcal{G}_\eta)$. A similar result holds for (9.29), since $\partial_t(\breve{v} \circ \mathcal{G}_\eta) = (\partial_t \breve{v}) \circ \mathcal{G}_\eta$ for any $\breve{v}$ defined on $(0, T) \times \Omega$. The direct statement then follows from Definition 9.2.1.

Similarly, assume that $(\breve{f}, \breve{g})$ (and $\breve{u}^0$ if applicable) are invariant. Let $\breve{u}$ be the corresponding solution, if it exists. Then, for any η, $\breve{u}$ and $\breve{u} \circ \mathcal{G}_\eta$ are solutions corresponding to the same data. By the uniqueness property, they must be equal; hence, $\breve{u}$ is invariant. ■

When everything in the problem (9.28) or (9.29), i.e., the domain, the operators and the data, is $(\mathcal{G}_\eta)_\eta$-invariant, we easily see that this problem is closely linked to the two-dimensional problem

$$A\,u = f \text{ in } \omega, \quad B\,u = g \text{ on } \partial\omega \tag{9.30}$$

or

$$\begin{cases} \partial_t u + A\,u = f \text{ in } (0, T) \times \omega, \quad B\,u = g \text{ on } (0, T) \times \partial\omega, \\ u(0, \mathbf{x}) = u^0(\mathbf{x}) \text{ in } \omega, \end{cases} \tag{9.31}$$

where

$$\{f, g, u^0\}(\mathbf{x}) = \left\{\breve{f}, \breve{g}, \breve{u}^0\right\}(\boldsymbol{x}),$$
$$\{A, B\}\,(\mathbf{x}; \partial_{\mathbf{x}}) = \left\{\tilde{A}, \tilde{B}\right\}(\mathbf{x}; \partial_{\mathbf{x}}, 0),$$

$\tilde{A}$ and $\tilde{B}$ being defined in (9.25). Thus, we have actually reduced the number of variables from 3 to 2, if G is one-dimensional.

In order to handle vector equations such as Maxwell's equations, we shall need a slightly more general framework for *symmetric* problems, related to Definition 9.2.5.

Definition 9.2.8 *Let the operator $\breve{B}$, respectively the couple $(\breve{A}, \breve{B})$ satisfy* (9.24)*. We define the spaces of* $(\mathcal{G}_\eta)_\eta$-symmetric *functions as follows.*

1. *A function $\breve{v}$ from Ω to $\mathbb{R}^M$ or $(0,T) \times \Omega$ to $\mathbb{R}^M$ is $(\mathcal{G}_\eta)_\eta$-symmetric if, and only if,*
$$\forall \eta \in \mathsf{G}, \quad \mathcal{I}_\eta\,(\breve{v} \circ \mathcal{G}_\eta) = \breve{v}. \tag{9.32}$$
2. *A function $\breve{g}$ from $\partial\Omega$ to $\mathbb{R}^m$ or $(0,T) \times \partial\Omega$ to $\mathbb{R}^m$ is $(\mathcal{G}_\eta)_\eta$-symmetric if, and only if,*
$$\forall \eta \in \mathsf{G}, \quad \mathcal{J}_\eta\,(\breve{g} \circ \mathcal{G}_\eta) = \breve{g}. \tag{9.33}$$

When $\breve{v}$ is $(\mathcal{G}_\eta)_\eta$-symmetric in the sense (9.32) and $(\breve{A}, \breve{B})$ are $(\mathcal{G}_\eta)_\eta$-symmetric in the sense (9.24), then $\breve{A}\,\breve{v}$ is $(\mathcal{G}_\eta)_\eta$-symmetric in the sense (9.32) and $\breve{B}\,\breve{v}$ is $(\mathcal{G}_\eta)_\eta$-symmetric in the sense (9.33). Notice that invariance and contravariance are special cases of symmetry, corresponding to $\mathcal{I}_\eta = \mathsf{Id}$ and $\mathcal{I}_\eta = \mathcal{G}_\eta^{-1} = \mathcal{G}_{-\eta}$, respectively. Thus, in the rotational case ($\mathcal{G}_\eta = \mathcal{R}_\eta$), we shall generally use the word *axisymmetric* to designate both invariant scalar fields and contravariant vector fields. Also, the symmetry operator $\mathcal{I}_\eta = \mathcal{R}_{-\eta}$ associated with contravariance by rotation transforms the basis vectors $(\boldsymbol{e}_r, \boldsymbol{e}_\theta, \boldsymbol{e}_z)$ into constant fields, hence the statement of Proposition 9.2.4.

The symmetry property is strongly related to the invariance property, under a natural assumption about the transformations $\mathcal{I}_\eta$ and $\mathcal{J}_\eta$. Let us define the operators P, Q in the adapted coordinates (9.21) as

$$P\,v(\mathbf{x}, \zeta) := \mathcal{I}_\zeta(v(\mathbf{x}, \zeta)), \quad Q\,g(\mathbf{x}, \zeta) := \mathcal{J}_\zeta(g(\mathbf{x}, \zeta)),$$

and $\breve{P}$, $\breve{Q}$ their expression in cartesian coordinates:

$$\breve{P} = \Phi^{-1} \circ P \circ \Phi, \quad \breve{Q} = \Phi^{-1} \circ Q \circ \Phi.$$

Then we have the following fundamental result.

Proposition 9.2.9 *Assume that the mappings $\eta \mapsto \mathcal{I}_\eta$ and $\eta \mapsto \mathcal{J}_\eta$ are morphisms of groups. Let $\breve{v}$ be $(\mathcal{G}_\eta)_\eta$-symmetric in the sense of* (9.32)*, and $\breve{g}$ be $(\mathcal{G}_\eta)_\eta$-symmetric in the sense of* (9.33)*. Then, $\breve{P}\,\breve{v}$ and $\breve{Q}\,\breve{g}$ are $(\mathcal{G}_\eta)_\eta$-invariant.*

This follows from the formula, valid for any v:

$$\forall (\mathbf{x}, \zeta, \eta) \in \mathsf{S} \times \mathsf{G} \times \mathsf{G}, \quad ((\mathcal{I}_\zeta\, v) \circ \mathcal{S}_\eta)\,(\mathbf{x}, \zeta) = \mathcal{I}_{\zeta+\eta}(v \circ \mathcal{S}_\eta)(\mathbf{x}, \zeta),$$

and similarly for g. Recall that $\mathcal{S}_\eta$ is the expression of $\mathcal{G}_\eta$ in adapted coordinates, cf. (9.22). With the help of these operators, it is possible to transform a symmetric problem into an invariant problem.

Proposition 9.2.10 *Let the operators* $(\breve{A}, \breve{B})$ *be* $(\mathcal{G}_\eta)_\eta$*-symmetric, i.e., they satisfy* (9.24)*. Assume, moreover, that* $(\mathcal{I}_\eta)_\eta$ *and* $(\mathcal{J}_\eta)_\eta$ *are groups. Then, the couple*

$$\left(\breve{A}^\star, \breve{B}^\star\right) := \left(\breve{P} \circ \breve{A} \circ \breve{P}^{-1}, \breve{Q} \circ \breve{B} \circ \breve{P}^{-1}\right) \tag{9.34}$$

is $(\mathcal{G}_\eta)_\eta$*-invariant.*

Proof. See [45, p. 16] for the rotational case ($\mathcal{G}_\eta = \mathcal{R}_\eta$, $\zeta = \theta$); the adaptation to the general case is straightforward. ■

This allows for a natural generalisation of (9.25). Defining yet another pair of operators $(\tilde{A}, \tilde{B})$ as

$$\tilde{A} = \Phi \circ \breve{A}^\star \circ \Phi^{-1}, \quad \tilde{B} = \Phi \circ \breve{B}^\star \circ \Phi^{-1}, \tag{9.35}$$

or, equivalently,

$$\begin{aligned} \tilde{A} &= P \circ \hat{A} \circ P^{-1}, \quad \text{with } \hat{A} = \Phi \circ \breve{A} \circ \Phi^{-1}, \\ \tilde{B} &= Q \circ \hat{B} \circ P^{-1}, \quad \text{with } \hat{B} = \Phi \circ \breve{B} \circ \Phi^{-1}, \end{aligned}$$

one sees that the coefficients of the operators $(\tilde{A}, \tilde{B})$ do not depend on the coordinate ζ. Setting, as previously,

$$\{A, B\}(\mathbf{x}; \partial_\mathbf{x}) = \left\{\tilde{A}, \tilde{B}\right\}(\mathbf{x}; \partial_\mathbf{x}, 0), \tag{9.36}$$

we have the following statement.

Proposition 9.2.11 *Assume that the couple of operators* $(\breve{A}, \breve{B})$ *is* $(\mathcal{G}_\eta)_\eta$*-symmetric and acts from a space* $\breve{V}$ *to a space* $\breve{F} \times \breve{G}$*. Define* $\breve{V}_0$*,* $\breve{F}_0$ *and* $\breve{G}_0$ *as the subspaces of* $\breve{V}$*,* $\breve{F}$ *and* $\breve{G}$ *made of* $(\mathcal{G}_\eta)_\eta$*-symmetric functions in the sense of* (9.32)*,* (9.32) *and* (9.33)*, respectively. Then, there exists spaces* V*,* F*,* G *of functions defined on* ω *such that the following mappings are isomorphisms:*

$$P \circ \Phi : \breve{V}_0 \mapsto V, \quad P \circ \Phi : \breve{F}_0 \mapsto F, \quad Q \circ \Phi : \breve{G}_0 \mapsto G.$$

Moreover, the operators (A, B) *defined by* (9.35) *and* (9.36) *are such that the following diagram commutes:*

$$\begin{array}{ccc} \breve{V}_0 & \xrightarrow{\breve{A} \times \breve{B}} & \breve{F}_0 \times \breve{G}_0 \\ {\scriptstyle P \circ \Phi} \downarrow & & \downarrow {\scriptstyle (P \circ \Phi) \times (Q \circ \Phi)} \\ V & \xrightarrow{A \times B} & F \times G \end{array}$$

Thanks to the the above discussion, we can generalise Proposition 9.2.7 and give it a precise formulation. As in Definition 4.2.4, we say that a static problem such as (9.28) is well-posed in the spaces $(\breve{V}, \breve{F}, \breve{G})$ if, for any

$(\breve{f}, \breve{g}) \in \breve{F} \times \breve{G}$, there exists a unique solution $\breve{u} \in \breve{V}$, which depends continuously on $(\breve{f}, \breve{g})$. For the evolution problem (9.29), the notion of well-posedness normally involves spaces expressing time regularity with values in a function space, e.g., for any data

$$\breve{f} \in E_1(\breve{F}), \quad \breve{g} \in E_2(\breve{G}), \quad \breve{u}^0 \in \breve{V},$$

there exists a unique solution $\breve{u} \in E_3(\breve{V})$, with continuous dependence. The spaces E_i measure time regularity; this framework contains the statements of the Hille–Yosida, Stone, and Lions–Magenes theorems, as well as those pertaining to constrained problems, cf. §4.3.

Proposition 9.2.12 *Assume the hypotheses of Proposition 9.2.11, and let the spaces V, F, G be normed in such a way that the isomorphisms of that Proposition are isometries: $\|v\|_V := \|(P \circ \Phi)v\|_{\breve{V}}$, and so on.*

If the problem (9.28) *is well-posed in the spaces $(\breve{V}, \breve{F}, \breve{G})$, its solution is $(\mathcal{G}_\eta)_\eta$-symmetric if, and only if, the data are as well; thus, the problem* (9.30) *is well-posed in the spaces (V, F, G). A similar result holds for* (9.29) *and its reduced version* (9.31).

Comment: the Curie principle

Propositions 9.2.7 and 9.2.12 are mathematical statements of the so-called *Curie principle*, well-known among physicists. Its general formulation goes:

"Effects have the same symmetry as causes."

From the above discussion, we see that it actually follows from two more fundamental principles. The first one is determinism: the same causes produce the same effects. Generally speaking, the "effect" is the solution to the equation(s) of interest (typically partial differential equations, sometimes more intricate), while the various data (right-hand side, initial and/or boundary values, coefficients...) represent the "cause".[4] Determinism means that the governing equation, such as (9.28) or (9.29), admits a unique solution in the "physically reasonable" function space. The second one is the homogeneity and isotropy of space. The laws of physics appear identical, wherever one may be and in whatever direction one may look. Their mathematical expression

[4] Sometimes, an in-depth analysis may allow for some dependence of this data on the solution, expressing a feed-back of the effects on the causes, and leading to a coupled model. An example in electromagnetics: the charged particles that generate the electric and magnetic fields may experience the effects of these fields on their motion. The source terms of Maxwell's equations (charge and current) are then given in function of the solutions to equations governing the motion of particles, where the fields appear as force terms. These equations can be kinetic (e.g., Vlasov, §1.3.1) or hydrodynamic (Euler, Navier–Stokes...; see §1.3.2 for some simplified models).

must be unchanged by the isometries of affine space: translations, reflections, rotations. Thus, it may only involve differential operators (**grad**, div, **curl**, Δ, etc.) "compatible" with these isometries, in the sense of Definitions 9.2.5 or 9.2.6.

On the other hand, the argument breaks down if uniqueness does not hold. In that case, one may have two different solutions $\breve{u}_1$ and $\breve{u}_2$ such that $\breve{u}_2 = \breve{u}_1 \circ \mathcal{G}_\eta$ or $\mathcal{I}_\eta(\breve{u}_1 \circ \mathcal{G}_\eta)$. This phenomenon is known in the physical community under the (slightly misleading) name of "spontaneous symmetry breaking".

9.2.3 Differential operators (continued)

Thanks to the vanishing of θ- or z-derivatives, one can easily check...

Proposition 9.2.13 *For any axisymmetric scalar field v:*

- $\mathbf{grad}\, v$ *is meridian.*

For any axisymmetric vector field $\boldsymbol{v}$:

- *If $\boldsymbol{v}$ is meridian ($v_\theta \equiv 0$), $\mathbf{curl}\, \boldsymbol{v}$ is azimuthal.*
- *If $\boldsymbol{v}$ is azimuthal ($\mathbf{v}_m \equiv 0$), $\mathbf{curl}\, \boldsymbol{v}$ is meridian and* $\operatorname{div} \boldsymbol{v} \equiv 0$.

The above statements remain valid when replacing the words "axisymmetric" with "invariant by translation", "meridian" with "transversal", and "azimuthal" with "longitudinal".

Above, the differential operators are considered in the sense of distributions. As a consequence, one can introduce the two-dimensional first-order operators for axisymmetric vector fields, in the (r, z) coordinates.

$$\operatorname{div} \boldsymbol{v} = \underline{\operatorname{div}}\, \mathbf{v}_m := \frac{1}{r}\frac{\partial}{\partial r}(r\, v_r) + \frac{\partial v_z}{\partial z}\,; \tag{9.37}$$

$$\mathbf{curl}\, \boldsymbol{v} = \underline{\mathbf{curl}}\, v_\theta + (\underline{\operatorname{curl}}\, \mathbf{v}_m)\, \boldsymbol{e}_\theta, \text{ with}$$

$$\underline{\mathbf{curl}}\, v_\theta := -\frac{\partial v_\theta}{\partial z}\, \boldsymbol{e}_r + \frac{1}{r}\frac{\partial}{\partial r}(r\, v_\theta)\, \boldsymbol{e}_z\,; \tag{9.38}$$

$$\underline{\operatorname{curl}}\, \mathbf{v}_m := \frac{\partial v_r}{\partial z} - \frac{\partial v_z}{\partial r}. \tag{9.39}$$

On the other hand, the corresponding gradient operator for axisymmetric scalar fields coincides with the usual gradient in the (r, z) plane:

$$\mathbf{grad}\, v = \underline{\mathbf{grad}}\, v := \frac{\partial v}{\partial r}\, \boldsymbol{e}_r + \frac{\partial v}{\partial z}\, \boldsymbol{e}_z.$$

In the plane case, there also exists a scalar curl operator, denoted by curl, and a vector curl one, denoted by **curl**. The divergence and gradient are defined as usual. These cartesian first-order operators are written as

$$\operatorname{curl} \boldsymbol{v} = \partial_x v_y - \partial_y v_x, \qquad \mathbf{curl}\, v = \partial_y v\, \boldsymbol{e}_x - \partial_x v\, \boldsymbol{e}_y, \tag{9.40}$$

$$\operatorname{div} \boldsymbol{v} = \partial_x v_x + \partial_y v_y, \qquad \mathbf{grad}\, v = \partial_x v\, \boldsymbol{e}_x + \partial_y v\, \boldsymbol{e}_y. \tag{9.41}$$

Using the longitudinal-transversal decomposition $\boldsymbol{v} = \mathbf{v}_\perp + v_z\, \boldsymbol{e}_z$, we obtain the following identities:

$$\mathbf{curl}\, \boldsymbol{v} = \mathbf{curl}\, v_z + (\operatorname{curl} \mathbf{v}_\perp)\, \boldsymbol{e}_z, \quad \operatorname{div} \boldsymbol{v} = \operatorname{div} \mathbf{v}_\perp. \tag{9.42}$$

Of equal interest in the sequel will be identities of the type

$$\mathbf{curl}(\xi^{-1}\, \mathbf{curl}\, \boldsymbol{v}) = \mathbf{curl}(\xi^{-1} \operatorname{curl} \mathbf{v}_\perp) + \operatorname{curl}(\xi^{-1}\, \mathbf{curl}\, v_z)\, \boldsymbol{e}_z, \tag{9.43}$$

under the assumption that ξ does not depend on z. The above formula becomes

$$\mathbf{curl}(\xi^{-1}\, \mathbf{curl}\, \boldsymbol{v}) = \underline{\mathbf{curl}}(\xi^{-1}\, \underline{\operatorname{curl}}\, \mathbf{v}_m) + \underline{\operatorname{curl}}(\xi^{-1}\, \underline{\mathbf{curl}}\, v_\theta)\, \boldsymbol{e}_\theta, \tag{9.44}$$

in the fully axisymmetric case, if ξ does not depend on θ.

9.2.4 The Maxwell's equations

In this subsection, we assume that we are solving Maxwell's equations (static or time-dependent) in one of the frameworks described at the beginning of §9.2, namely, the domain and the data are either invariant by translation or axisymmetric. (The data of Maxwell's equation comprise the charge and current $(\varrho, \boldsymbol{J})$, the initial conditions $(\boldsymbol{E}_0, \boldsymbol{H}_0)$, the incoming wave $\boldsymbol{g}^\star$ if present, and the material coefficients (ε, μ).) As a consequence of the Curie principle, the electromagnetic field is then also invariant by rotation or translation. An interesting feature of these models is that Proposition 9.2.13 allows one to decouple the set of equations in two unrelated subsystems, involving different components of the fields, and set in the meridian or transversal section ω.[5]

These systems turn out to be very similar in both frameworks. Actually, they are even formally identical (with the exception of one sign in (9.50) and (9.59) for the Silver–Müller boundary condition, and one extra equation (9.67) for the longitudinal magnetic field in the plane model) with the following conventions:

- $\mathbf{E}$, $\mathbf{H}$, etc., refer to the meridian components $\mathbf{E}_m$, $\mathbf{H}_m$ in the fully axisymmetric case, and to the transversal components $\mathbf{E}_\perp$, $\mathbf{H}_\perp$ in the plane case.

[5] When (ε, μ) are tensors, one must assume *in addition* that they have a block structure $\begin{pmatrix} \bullet & \bullet & 0 \\ \bullet & \bullet & 0 \\ 0 & 0 & \bullet \end{pmatrix}$ that decouples the meridian/transversal components from the azimuthal/longitudinal one. The reader can easily write the (slight) adaptations induced on the equations in this subsection. Recall (Chapter 5) that (ε, μ) are always assumed to be scalar near the artificial boundary Γ_A, so the Silver–Müller boundary condition is not affected.

- E, H, etc., designate the azimuthal components E_θ, H_θ in the fully axisymmetric case, and the longitudinal components E_z, H_z in the plane case.
- In the fully axisymmetric framework, the notations **curl**, curl, div are understood as the cylindrical 2D operators $\underline{\mathbf{curl}}$, $\underline{\mathrm{curl}}$, $\underline{\mathrm{div}}$ defined in (9.37)–(9.39).

Remark 9.2.14 *However, one should be aware of certain specific features of the fully axisymmetric model, which are not without importance when it comes to practical applications or computational issues [21]. First, the axisymmetric differential operators have singularities on the axis. Second, the variables belong to* weighted *Sobolev spaces; what is more, the radial and axial components of a given vector field (which are both meridian) generally belong to different spaces. We shall develop these points in §9.3.2.*

The two systems

Starting from (9.1)–(9.4), and using the results of §9.2.3, we arrive at the following decoupled systems. The first system of unknowns $(\mathbf{E}, H)$ with data $(\mathbf{J}, \varrho)$ is called *transverse electric (TE)* and is expressed as

$$\varepsilon \frac{\partial \mathbf{E}}{\partial t} - \mathbf{curl}\, H = -\mathbf{J}, \tag{9.45}$$

$$\mu \frac{\partial H}{\partial t} + \mathrm{curl}\, \mathbf{E} = 0, \tag{9.46}$$

$$\mathrm{div}(\varepsilon \mathbf{E}) = \varrho. \tag{9.47}$$

The charge conservation equation reads as

$$\frac{\partial \varrho}{\partial t} + \mathrm{div}\, \mathbf{J} = 0. \tag{9.48}$$

The above equations hold in $(0, T) \times \omega$. The boundary and initial conditions are

$$\mathbf{E} \cdot \boldsymbol{\tau} = 0 \quad \text{on } (0, T) \times \gamma_P, \tag{9.49}$$

$$\delta\, \mathbf{E} \cdot \boldsymbol{\tau} + \sqrt{\mu/\varepsilon}\, H = g^\star \quad \text{on } (0, T) \times \gamma_A, \tag{9.50}$$

$$\mathbf{E}(0) = \mathbf{E}_0 \quad \text{in } \omega, \tag{9.51}$$

$$H(0) = H_0 \quad \text{in } \omega. \tag{9.52}$$

The sign δ in (9.50) is equal to -1 in the fully axisymmetric model, and $+1$ in the plane one, cf. (9.13)–(9.14) and (9.17)–(9.18), respectively. We see that there is no boundary condition for H on γ_P: it is not affected by the 3D boundary condition $\boldsymbol{H} \cdot \boldsymbol{n} = 0$, in contradistinction to E (see (9.57) below). Notice, however, the following property for a plane cavity problem:

$$\frac{\partial}{\partial t} \int_\omega \mu H \, d\omega = \int_\omega 1 \, \mathrm{curl}\, \mathbf{E} \, d\omega = \int_\omega \mathbf{E} \cdot \mathbf{curl}\, 1 \, d\omega - \int_\gamma (\mathbf{E} \cdot \boldsymbol{\tau})\, 1 \, d\gamma = 0. \tag{9.53}$$

This follows from (9.46), (9.49) and the integration-by-parts formula (9.84) (see p. 347 below).

The second system in $(E, \mathbf{H})$ has the data J and is called *transverse magnetic (TM)*. The equations in $(0,T) \times \omega$ are

$$\varepsilon \frac{\partial E}{\partial t} - \operatorname{curl} \mathbf{H} = -J, \tag{9.54}$$

$$\mu \frac{\partial \mathbf{H}}{\partial t} + \mathbf{curl}\, E = 0, \tag{9.55}$$

$$\operatorname{div}(\mu \mathbf{H}) = 0. \tag{9.56}$$

There is no compatibility condition for this problem. The boundary and initial conditions read as

$$E = 0 \quad \text{on } (0,T) \times \gamma_P, \tag{9.57}$$

$$\mathbf{H} \cdot \boldsymbol{\nu} = 0 \quad \text{on } (0,T) \times \gamma_P, \tag{9.58}$$

$$-\delta\, E + \sqrt{\mu/\varepsilon}\, \mathbf{H} \cdot \boldsymbol{\tau} = \mathbf{g}^\star \cdot \boldsymbol{\tau} \quad \text{on } (0,T) \times \gamma_A, \tag{9.59}$$

$$E(0) = E_0 \quad \text{in } \omega, \tag{9.60}$$

$$\mathbf{H}(0) = \mathbf{H}_0 \quad \text{in } \omega, \tag{9.61}$$

where the δ in (9.59) is the same as in (9.50).

Static case

Let us first consider the static case. Thus, we assume that the sources $(\boldsymbol{J}, \varrho)$, the coefficients (ε, μ) and the solution $(\boldsymbol{E}, \boldsymbol{H})$ are independent of time, and that we are dealing with a cavity problem.

For the transverse electric mode $(\mathbf{E}, H)$, Eqs. (9.45)–(9.52) become the following static problem:

$$\mathbf{curl}\, H = \mathbf{J} \quad \text{in } \omega, \tag{9.62}$$

$$\operatorname{div} \mathbf{J} = 0 \quad \text{in } \omega, \tag{9.63}$$

$$\operatorname{curl} \mathbf{E} = 0 \quad \text{in } \omega, \tag{9.64}$$

$$\operatorname{div}(\varepsilon \mathbf{E}) = \varrho \quad \text{in } \omega, \tag{9.65}$$

$$\mathbf{E} \cdot \boldsymbol{\tau} = 0 \quad \text{on } \gamma. \tag{9.66}$$

As previously noted, there is no boundary condition for H, in contradistinction to E (see (9.72) below). On the other hand, Eq. (9.62) only defines H up to an additive constant. In the fully axisymmetric model, there is no ambiguity when γ_a has non-zero length, since H automatically vanishes there (in a weak sense).[6] When $\gamma_a = \emptyset$, i.e., when Ω is included in a torus, and in the plane model, the ambiguity can be removed by imposing, e.g., the condition:

[6] Under the "usual" regularity conditions (see Propositions 9.3.15 and 9.3.20 below). Incidentally, the same holds for E.

$$(\mu H \mid 1)_{L^2_1} = 0 \qquad \text{respectively} \qquad (\mu H \mid 1)_{L^2} = 0, \tag{9.67}$$

as the magnetic field is the solution to a kind of Neumann problem. In the "toric" axisymmetric model, this equation is linked to topological issues (see the discussion at the end of §9.3.2.). In the plane model, it is consistent with (9.53), which holds in the time-dependent case.

As for the transverse magnetic mode of unknowns $(\mathbf{H}, E)$, the static equations write

$$\operatorname{curl} \mathbf{H} = J \quad \text{in } \omega, \tag{9.68}$$
$$\operatorname{div}(\mu \mathbf{H}) = 0 \quad \text{in } \omega, \tag{9.69}$$
$$\mathbf{H} \cdot \boldsymbol{\nu} = 0 \quad \text{on } \gamma, \tag{9.70}$$
$$\mathbf{curl}\, E = 0 \quad \text{in } \omega, \tag{9.71}$$
$$E = 0 \quad \text{on } \gamma. \tag{9.72}$$

The last two equations (9.71)–(9.72) immediately imply $E = 0$ in ω.

Time-dependent case

As usual, it is worthwhile to formulate the Maxwell's equations as systems of second order in time, cf. (9.5)–(9.8). We assume that the material coefficients ε, μ are independent of time. Proceeding as in Chapter 7, one easily derives the results summarised in the next Theorem.[7]

Theorem 9.2.15 *In the TE system of first-order Maxwell equations* (9.45)–(9.52)*, the evolution equations* (9.45)–(9.46) *can be replaced with*

$$\varepsilon \frac{\partial^2 \mathbf{E}}{\partial t^2} + \mathbf{curl}(\mu^{-1} \operatorname{curl} \mathbf{E}) = -\frac{\partial \mathbf{J}}{\partial t} \quad \textit{in } (0,T) \times \omega, \tag{9.73}$$
$$\mu \frac{\partial^2 H}{\partial t^2} + \operatorname{curl}(\varepsilon^{-1} \mathbf{curl}\, H) = \operatorname{curl}(\varepsilon^{-1} \mathbf{J}) \quad \textit{in } (0,T) \times \omega, \tag{9.74}$$

supplemented with the extra initial and boundary conditions

$$\frac{\partial \mathbf{E}}{\partial t}(0) = \mathbf{E}_1 := \varepsilon^{-1}(\mathbf{curl}\, H_0 - \mathbf{J}(0)) \quad \textit{in } \omega, \tag{9.75}$$
$$\frac{\partial H}{\partial t}(0) = H_1 := -\mu^{-1} \operatorname{curl} \mathbf{E}_0 \quad \textit{in } \omega, \tag{9.76}$$
$$\varepsilon^{-1}(\mathbf{curl}\, H - \mathbf{J}) \cdot \boldsymbol{\tau} = 0 \quad \textit{on } (0,T) \times \gamma_P. \tag{9.77}$$

In the TM system of first-order Maxwell equations (9.54)–(9.61)*, the evolution equations* (9.54)–(9.55) *can be replaced with*

[7] Alternatively, these results may be viewed as straightforward consequences of their three-dimensional counterparts of Chapter 7, using the identities (9.43) and (9.44).

$$\varepsilon \frac{\partial^2 E}{\partial t^2} + \operatorname{curl}(\mu^{-1}\,\mathbf{curl}\,E) = -\frac{\partial J}{\partial t} \quad \textit{in } (0,T)\times\omega, \tag{9.78}$$

$$\mu\,\frac{\partial^2 \mathbf{H}}{\partial t^2} + \mathbf{curl}(\varepsilon^{-1}\operatorname{curl}\mathbf{H}) = \mathbf{curl}(\varepsilon^{-1}J) \quad \textit{in } (0,T)\times\omega, \tag{9.79}$$

supplemented with the extra initial and boundary conditions

$$\frac{\partial E}{\partial t}(0) = E_1 := \varepsilon^{-1}(\operatorname{curl}\mathbf{H}_0 - J(0)) \quad \textit{in } \omega, \tag{9.80}$$

$$\frac{\partial \mathbf{H}}{\partial t}(0) = \mathbf{H}_1 := -\mu^{-1}\,\mathbf{curl}\,E_0 \quad \textit{in } \omega, \tag{9.81}$$

$$\varepsilon^{-1}(\operatorname{curl}\mathbf{H} - J) = 0 \quad \textit{on } (0,T)\times\gamma_P. \tag{9.82}$$

Remark 9.2.16 *Eq.* (9.78) *is actually a scalar wave equation. Actually, it follows from* (9.84) *below that the operators* curl *and* **curl** *are dual. The same holds for* $\underline{\mathbf{curl}}$ *and* $\underline{\operatorname{curl}}$*, as can be seen by applying* (2.27) *to an axisymmetric couple* $(\breve{\boldsymbol{f}}, \breve{\boldsymbol{g}})$*, where* $\breve{\boldsymbol{f}} = \mathbf{f}_m$ *is meridian and* $\breve{\boldsymbol{g}} = g_\theta\,\boldsymbol{e}_\theta$ *is azimuthal.*

In the case of uniform scalar material coefficients, e.g., in vacuum $(\varepsilon,\mu) = (\varepsilon_0,\mu_0)$, we obtain the simplified versions of (9.73) and (9.78):

$$\frac{\partial^2 \mathbf{E}}{\partial t^2} + c^2\ \mathbf{curl}\operatorname{curl}\mathbf{E} = -\frac{1}{\varepsilon_0}\frac{\partial \mathbf{J}}{\partial t},$$
$$\frac{\partial^2 E}{\partial t^2} + c^2\operatorname{curl}\mathbf{curl}\,E = -\frac{1}{\varepsilon_0}\frac{\partial J}{\partial t}.$$

As far as the second equation is concerned, notice that $\operatorname{curl}\mathbf{curl} = -\Delta$ in the plane case; in the fully axisymmetric case, one gets a "modified" Laplacian:

$$\underline{\operatorname{curl}}\,\underline{\mathbf{curl}} = -\Delta' := -\left(\partial_r^2 + r^{-1}\,\partial_r + \partial_z^2\right) + r^{-2}.$$

Similar equations for the magnetic induction are, denoting $(\mathbf{B},B) = \mu_0\,(\mathbf{H},H)$,

$$\frac{\partial^2 \mathbf{B}}{\partial t^2} + c^2\ \mathbf{curl}\operatorname{curl}\mathbf{B} = \frac{1}{\varepsilon_0}\,\mathbf{curl}\,J,$$
$$\frac{\partial^2 B}{\partial t^2} + c^2\operatorname{curl}\mathbf{curl}\,B = \frac{1}{\varepsilon_0}\operatorname{curl}\mathbf{J}.$$

The boundary or initial conditions undergo similar simplifications; e.g., the initial conditions of order one are

$$\frac{\partial \mathbf{E}}{\partial t}(0) = c^2\,\mathbf{curl}\,B_0 - \frac{1}{\varepsilon_0}\mathbf{J}(0), \qquad \frac{\partial B}{\partial t}(0) = -\operatorname{curl}\mathbf{E}_0,$$
$$\frac{\partial E}{\partial t}(0) = c^2\ \operatorname{curl}\mathbf{B}_0 - \frac{1}{\varepsilon_0}J(0), \qquad \frac{\partial \mathbf{B}}{\partial t}(0) = -\,\mathbf{curl}\,E_0.$$

9.3 Some results of functional analysis

9.3.1 Prismatic setting (plane model)

We consider invariant-by-translation scalar or vector fields on the infinite cylinder $\omega \times \mathbb{R}$; or, equivalently, fields defined on $\Omega = \omega \times]0, L[$ that do not depend on z. The spaces made of such fields will be denoted by a breve sign over their symbol: $\breve{H}^s(\Omega)$, $\breve{\boldsymbol{H}}(\mathbf{curl}, \Omega)$, $\breve{\boldsymbol{X}}_N(\Omega)\ldots$ The goal of this presentation is to characterise these spaces by their traces in a longitudinal plane, which are function spaces defined on ω.

In this subsection, we shall also put a breve over the letters designating the invariant fields themselves, in order to distinguish $\breve{f}$, $\breve{\boldsymbol{F}}$ (defined on Ω or $\omega \times \mathbb{R}$) from their traces in a transversal plane f, $\boldsymbol{F}$ (defined on ω). Characterising the regularity of such fields on the usual Sobolev scale is not difficult...

Proposition 9.3.1 *The trace operator $\breve{f} \mapsto f$ and the lifting operator $f \mapsto \breve{f}$ are bijective isometries between $\breve{H}^s(\Omega)$ and $H^s(\omega)$, and similarly between $\breve{\boldsymbol{H}}^s(\Omega)$ and $\boldsymbol{H}^s(\omega)$.*

Proof. The result is an immediate consequence of Fubini's theorem for $s = 0$. Extension to positive integral values of s then follows from the usual definition of these spaces, given that all derivatives in z vanish. Finally, the case of non-integral s is handled by interpolation. ■

Boundary conditions are handled in a standard way. One easily checks that trace operators on the lateral surface $\Gamma_{\text{lat}} := \gamma \times]0, L[$ and on a transversal plane commute, for $s > 1/2$:

$$\begin{array}{ccc} \breve{f} \in \breve{H}^s(\Omega) & \mapsto & f \in H^s(\omega) \\ \downarrow & & \downarrow \\ \breve{f}_{|\Gamma_{\text{lat}}} \in \breve{H}^{s-1/2}(\Gamma_{\text{lat}}) & \mapsto & f_{|\gamma} \in H^{s-1/2}(\gamma). \end{array}$$

However, when dealing with trace-free spaces, one should remember that functions in $\breve{H}^s_0(\Omega)$ vanish both on Γ_{lat} and on the bases Γ_0 and Γ_L; combined with invariance by translation, the latter condition does not leave many interesting functions to study. So, we take the following...

Definition 9.3.2 *Let $s \geq 0$. The space $H^s_\diamond(\Omega)$ is defined equivalently as:*

- *The set of restrictions to Ω of functions in $H^s_0(\omega \times \mathbb{R})$.*
- *The closure of the set $\{\varphi \in C^\infty(\Omega) : \operatorname{supp} \varphi \cap \Gamma_{\text{lat}} = \emptyset\}$ within $H^s(\Omega)$.*
- *The space of functions in $H^s(\Omega)$ whose normal derivatives of order $0 \leq j < s - \frac{1}{2}$ vanish on Γ_{lat}.*

The case of $\boldsymbol{H}_\diamond(\mathbf{curl}, \Omega)$ and $\boldsymbol{H}_\diamond(\operatorname{div}, \Omega)$ is similar; for instance, the third definition reads as

$$\boldsymbol{H}_\diamond(\mathbf{curl}, \Omega) = \{\boldsymbol{F} \in \boldsymbol{H}(\mathbf{curl}, \Omega) : \boldsymbol{F} \times \boldsymbol{n} = 0 \text{ on } \Gamma_{\text{lat}}\},$$
$$\boldsymbol{H}_\diamond(\operatorname{div}, \Omega) = \{\boldsymbol{F} \in \boldsymbol{H}(\operatorname{div}, \Omega) : \boldsymbol{F} \cdot \boldsymbol{n} = 0 \text{ on } \Gamma_{\text{lat}}\}.$$

Then, we have:

Proposition 9.3.3 *The trace operator maps $\breve{H}^s_\diamond(\Omega)$ onto $H^s_0(\omega)$, and conversely for the lifting operator.*

Let us now examine the usual spaces of electromagnetics. Due to invariance by translation, both perfect conductor and incoming/outgoing wave conditions can be imposed on the lateral surface only. Thus, the "natural" spaces of electric and magnetic fields in the three-dimensional domain Ω are

$$\begin{aligned}\breve{\boldsymbol{X}}_N(\Omega;\varepsilon) &= \breve{\boldsymbol{H}}_\diamond(\mathbf{curl},\Omega)\cap\breve{\boldsymbol{H}}(\operatorname{div}\varepsilon,\Omega),\\ \breve{\boldsymbol{X}}_T(\Omega;\mu) &= \breve{\boldsymbol{H}}(\mathbf{curl},\Omega)\cap\breve{\boldsymbol{H}}_\diamond(\operatorname{div}\mu,\Omega),\end{aligned}$$

if the perfect conductor condition holds everywhere ($\Gamma_A=\emptyset$); while, in the presence of an artificial boundary Γ_A, we have

$$\begin{aligned}\breve{\boldsymbol{X}}_{N,A}(\Omega;\varepsilon) &= \{\breve{\boldsymbol{u}}\in\breve{\boldsymbol{H}}(\mathbf{curl},\Omega)\cap\breve{\boldsymbol{H}}(\operatorname{div}\varepsilon,\Omega):\breve{\boldsymbol{u}}\times\boldsymbol{n}_{|\Gamma_{\rm lat}}\in\breve{\boldsymbol{L}}^2(\Gamma_{\rm lat}),\ \breve{\boldsymbol{u}}\times\boldsymbol{n}_{|\Gamma_P^{\rm lat}}=0\}\\ \breve{\boldsymbol{X}}_{T,A}(\Omega;\mu) &= \{\breve{\boldsymbol{u}}\in\breve{\boldsymbol{H}}(\mathbf{curl},\Omega)\cap\breve{\boldsymbol{H}}(\operatorname{div}\mu,\Omega):\breve{\boldsymbol{u}}\times\boldsymbol{n}_{|\Gamma_{\rm lat}}\in\breve{\boldsymbol{L}}^2(\Gamma_{\rm lat}),\ \breve{\boldsymbol{u}}\cdot\boldsymbol{n}_{|\Gamma_P^{\rm lat}}=0\}\end{aligned}$$

As usual, we shall write $\breve{\boldsymbol{X}}_N(\Omega)$, $\breve{\boldsymbol{X}}_T(\Omega)$, $\breve{\boldsymbol{X}}_{N,A}(\Omega)$, $\breve{\boldsymbol{X}}_{T,A}(\Omega)$ in the case of constant scalar coefficients; and we shall omit the subscripts $_{N,\,T}$ when making statements valid for both boundary conditions.

To study the traces of these spaces, we first introduce some two-dimensional equivalents of the $\boldsymbol{H}(\operatorname{div})$ and $\boldsymbol{H}(\mathbf{curl})$ spaces.

Definition 9.3.4 *Recall the plane divergence and scalar curl operators from* (9.40) *and* (9.41)*. Defining* $\mathbf{L}^2(\omega):=L^2(\omega)^2$*, we denote*

$$\begin{aligned}\mathbf{H}(\operatorname{div},\omega) &= \left\{\mathbf{u}\in\mathbf{L}^2(\omega):\operatorname{div}\mathbf{u}\in L^2(\omega)\right\},\\ \mathbf{H}(\operatorname{div}\xi,\omega) &= \left\{\mathbf{u}\in\mathbf{L}^2(\omega):\operatorname{div}(\xi\,\mathbf{u})\in L^2(\omega)\right\},\\ \mathbf{H}_0(\operatorname{div}\xi,\omega) &= \{\mathbf{u}\in\mathbf{H}(\operatorname{div}\xi,\omega):\mathbf{u}\cdot\boldsymbol{\nu}=0\ \textit{on}\ \gamma\}\ ;\\ \mathbf{H}(\operatorname{curl},\omega) &= \left\{\mathbf{u}\in\mathbf{L}^2(\omega):\operatorname{curl}\mathbf{u}\in L^2(\omega)\right\},\\ \mathbf{H}_0(\operatorname{curl},\omega) &= \{\mathbf{u}\in\mathbf{H}(\operatorname{curl},\omega):\mathbf{u}\cdot\boldsymbol{\tau}=0\ \textit{on}\ \gamma\}.\end{aligned}$$

On the other hand, the spaces that would likely be denoted $H(\mathbf{curl},\omega)$ and $H(\mathbf{grad},\omega)$ are, in fact, identical to $H^1(\omega)$. Thanks to the identities (9.42), one easily proves:

Proposition 9.3.5 *Let $\breve{\boldsymbol{F}}$ be an invariant-by-translation vector field on Ω, and $\boldsymbol{F}=\mathbf{F}_\perp+F_z\,\boldsymbol{e}_z$ its trace. Let $\breve{\xi}$ be a measurable, invariant-by-translation function satisfying*[8] $0<\xi_*\le\breve{\xi}(x,y,z)\le\xi^*$ *a.e. on Ω for some constants ξ_*, ξ^*. Then, the following characterisations hold:*

[8] If $\breve{\xi}$ is a tensor and has the block structure described in footnote[5], p. 340, these inequalities are to be taken in the sense of symmetric matrices, as in (5.10).

$$\begin{aligned}
\breve{\boldsymbol{F}} \in \breve{\boldsymbol{H}}(\mathbf{curl}, \Omega) &\iff \mathbf{F}_\perp \in \mathbf{H}(\mathrm{curl}, \omega) \ \textit{and}\ F_z \in H^1(\omega)\,; \\
\breve{\boldsymbol{F}} \in \breve{\boldsymbol{H}}_\diamond(\mathbf{curl}, \Omega) &\iff \mathbf{F}_\perp \in \mathbf{H}_0(\mathrm{curl}, \omega) \ \textit{and}\ F_z \in H^1_0(\omega)\,; \\
\breve{\boldsymbol{F}} \in \breve{\boldsymbol{H}}(\mathrm{div}\,\breve{\xi}, \Omega) &\iff \mathbf{F}_\perp \in \mathbf{H}(\mathrm{div}\,\xi, \omega) \ \textit{and}\ F_z \in L^2(\omega)\,; \\
\breve{\boldsymbol{F}} \in \breve{\boldsymbol{H}}_\diamond(\mathrm{div}\,\breve{\xi}, \Omega) &\iff \mathbf{F}_\perp \in \mathbf{H}_0(\mathrm{div}\,\xi, \omega) \ \textit{and}\ F_z \in L^2(\omega).
\end{aligned}$$

From the above results, one can characterise the trace spaces of the "natural" 3D spaces for the augmented formulations.

Proposition 9.3.6 *Under the assumptions of Proposition 9.3.5, it holds that*

$$\begin{aligned}
\breve{\boldsymbol{F}} \in \breve{\boldsymbol{X}}_N(\Omega;\varepsilon) &\iff \mathbf{F}_\perp \in \mathbf{X}_N(\omega;\varepsilon) \ \textit{and}\ F_z \in H^1_0(\omega)\,; \\
\breve{\boldsymbol{F}} \in \breve{\boldsymbol{X}}_T(\Omega;\mu) &\iff \mathbf{F}_\perp \in \mathbf{X}_T(\omega;\mu) \ \textit{and}\ F_z \in H^1(\omega)\,; \\
\breve{\boldsymbol{F}} \in \breve{\boldsymbol{X}}_{N,A}(\Omega;\varepsilon) &\iff \mathbf{F}_\perp \in \mathbf{X}_{N,A}(\omega;\varepsilon) \ \textit{and}\ F_z \in H^1(\omega),\ F_z = 0 \ \textit{on}\ \gamma_P\,; \\
\breve{\boldsymbol{F}} \in \breve{\boldsymbol{X}}_{T,A}(\Omega;\mu) &\iff \mathbf{F}_\perp \in \mathbf{X}_{T,A}(\omega;\mu) \ \textit{and}\ F_z \in H^1(\omega),
\end{aligned}$$

where the "natural" spaces of two-dimensional fields in the longitudinal section are defined as

$$\begin{aligned}
\mathbf{X}_N(\omega;\varepsilon) &= \mathbf{H}_0(\mathrm{curl}, \omega) \cap \mathbf{H}(\mathrm{div}\,\varepsilon, \omega), \\
\mathbf{X}_T(\omega;\mu) &= \mathbf{H}(\mathrm{curl}, \omega) \cap \mathbf{H}_0(\mathrm{div}\,\mu, \omega), \\
\mathbf{X}_{N,A}(\omega;\varepsilon) &= \{\mathbf{u} \in \mathbf{H}(\mathrm{curl}, \omega) \cap \mathbf{H}(\mathrm{div}\,\varepsilon, \omega) : \mathbf{u} \cdot \boldsymbol{\tau}_{|\gamma} \in L^2(\gamma),\ \mathbf{u} \cdot \boldsymbol{\tau}_{|\gamma_P} = 0\}, \\
\mathbf{X}_{T,A}(\omega;\mu) &= \{\mathbf{u} \in \mathbf{H}(\mathrm{curl}, \omega) \cap \mathbf{H}(\mathrm{div}\,\mu, \omega) : \mathbf{u} \cdot \boldsymbol{\tau}_{|\gamma} \in L^2(\gamma),\ \mathbf{u} \cdot \boldsymbol{\nu}_{|\gamma_P} = 0\}.
\end{aligned}$$

The coefficient ε, μ or the subscript $_{N,\,T}$ may be omitted in the notation, with the same conventions as for the spaces of three-dimensional fields.

Before ending this presentation, we notice that all these spaces enjoy properties very similar to their three-dimensional counterparts. One can establish two-dimensional versions of the integration-by-parts formulas (2.25) and (2.27). Below, g is an arbitrary function in $H^1(\omega)$, and the duality pairings on the right-hand sides are understood between $H^{-1/2}(\gamma)$ and $H^{1/2}(\gamma)$.

$$\forall \mathbf{f} \in \mathbf{H}(\mathrm{div}, \omega), \quad \int_\omega \{\mathbf{f} \cdot \mathbf{grad}\, g + \mathrm{div}\,\mathbf{f}\, g\}\, d\omega = \langle \mathbf{f} \cdot \boldsymbol{\nu}, g \rangle. \tag{9.83}$$

$$\forall \mathbf{f} \in \mathbf{H}(\mathrm{curl}, \omega), \quad \int_\omega \{\mathbf{f} \cdot \mathbf{curl}\, g - \mathrm{curl}\,\mathbf{f}\, g\}\, d\omega = \langle \mathbf{f} \cdot \boldsymbol{\tau}, g \rangle. \tag{9.84}$$

The identity (9.83) is a special case of (2.25) when $(\breve{\boldsymbol{f}}, \breve{g})$ are independent of z and $\breve{\boldsymbol{f}}$ is transversal (i.e., $\breve{f}_z = 0$ or $\breve{\boldsymbol{f}} = \mathbf{f} := \mathbf{f}_\perp$). To obtain (9.84), one applies (2.27) to a couple $(\breve{\boldsymbol{f}}, \breve{\boldsymbol{g}})$ independent of z, where, in addition, $\breve{\boldsymbol{f}} = \mathbf{f}$ is transversal and $\breve{\boldsymbol{g}} = g\, \boldsymbol{e}_z$ is longitudinal.

The potential extraction theory of §§3.3 through 3.6 and the compact imbedding Theorems 3.4.4, 3.5.4, 7.5.1, 7.5.3 take on a simpler form, thanks to the following results. (We refer the reader to [164, 184] for extensive discussions and proofs.) For an open set $\omega \subset \mathbb{R}^2$, the topological conditions of §3.2 rewrite as follows:

$(\mathbf{Top})_{I=0}$: Any vector field $\mathbf{u} \in \boldsymbol{C}^1(\omega)$ such that $\operatorname{curl} \mathbf{u} = 0$ is a gradient, i.e., there exists $\varphi \in C^0(\omega)$ such that $\mathbf{u} = \mathbf{grad}\, \varphi$. Such a set ω will also be called *topologically trivial*.

$(\mathbf{Top})_{I>0}$: There exist I curves $(\sigma_i)_{1 \le i \le I}$ such that $\dot{\omega} := \omega \setminus \bigcup_{i=1}^{I} \sigma_i$ is topologically trivial.

Then, we have the following remarkable result.

Theorem 9.3.7 *A bounded, open, connected subset $\omega \subset \mathbb{R}^2$ is topologically trivial if, and only if, it is* simply connected *(i.e., every closed curve can be contracted to a point).*

More generally, ω satisfies the hypothesis $(\mathbf{Top})_{I>0}$ if, and only if, it is I-connected, i.e., there exist I closed curves that cannot be contracted to a point, nor continuously deformed into one another, while staying in ω.

An all-important class of simply connected or topologically trivial subsets is given by the following definition and theorem.

Definition 9.3.8 *A* Jordan curve *is the image of an injective and continuous mapping $\mathbb{S}^1 \to \mathbb{R}^2$, which is homeomorphic to $\mathbb{S}^1$; in particular, it is connected.*

Theorem 9.3.9 `(Jordan, Schoenflies)` *A Jordan curve separates the plane $\mathbb{R}^2$ into two connected components, the inside (bounded) and the outside (unbounded). Furthermore, the inside is homeomorphic to a disc, hence topologically trivial. The inside of a Jordan curve will be called a* Jordan domain.

Remarkably again, a converse statement holds for a large class of subsets, which comprises all domains (open, bounded, connected subsets with a Lipschitz boundary; in particular, locally on one side of their boundary).

Theorem 9.3.10 *Any domain that is simply connected, is actually a Jordan domain.*

In a Jordan domain, the topological conditions are empty, and a simple Weber inequality holds.

Theorem 9.3.11 *The imbedding of $\mathbf{X}(\omega;\xi)$ into $\mathbf{L}^2(\omega)$ is compact. As a consequence, when ω is a Jordan domain, the semi-norm $\|\mathbf{u}\|_{\mathbf{X}} = \mathfrak{a}_\xi(\mathbf{u},\mathbf{u})^{1/2}$, where*

$$\mathfrak{a}_\xi(\mathbf{u},\mathbf{v}) := \int_\omega \{w_1 \operatorname{curl} \mathbf{u} \operatorname{curl} \mathbf{v} + w_2 \operatorname{div}(\xi \mathbf{u}) \operatorname{div}(\xi \mathbf{v})\}\, d\omega, \tag{9.85}$$

and the measurable weight functions w_1, w_2 satisfy $0 < w_{i*} \le w_i(x,y) \le w_i^* < \infty$ for a.e. $(x,y) \in \omega$, defines a norm on $\mathbf{X}(\omega;\xi)$, which is equivalent to the $\mathbf{H}(\operatorname{curl},\omega) \cap \mathbf{H}(\operatorname{div}\xi,\omega)$-graph norm.

A generalisation to more complicated domains is possible along the following lines.

Theorem 9.3.12 *Let ω be a domain and $I > 0$ an integer. The following statements are equivalent:*

1. *ω is homeomorphic to a large open disc, with I small closed discs removed.*
2. *The boundary $\gamma = \partial\omega$ is made of $I+1$ connected components $(\gamma_j)_{0\le j\le I}$, which are Jordan curves. By convention, γ_0 separates ω from an unbounded exterior domain.*
3. *ω satisfies $(\mathbf{Top})_{I>0}$.*

*If ω satisfies these conditions, it will be called an I-*annulus*.*

Theorem 9.3.13 *In a general domain ω, the following expression defines a norm in $\mathbf{X}(\omega;\xi)$, equivalent to the graph norm:*

$$\|\mathbf{u}\|^2_{\mathbf{X}} = \mathfrak{a}_\xi(\mathbf{u},\mathbf{u}) + \|P_{\mathbf{Z}^\xi}\mathbf{u}\|^2_0\,,$$

where $P_{\mathbf{Z}^\xi}$ designates the orthogonal (in both $\mathbf{L}^2(\omega)$ and $\mathbf{H}(\mathrm{curl},\omega)\cap\mathbf{H}(\mathrm{div}\,\xi,\omega)$-graph norms) projection onto the subspace

$$\mathbf{Z}(\omega;\xi) := \{\mathbf{w}\in\mathbf{X}(\omega;\xi) : \mathrm{curl}\,\mathbf{w} = 0 \text{ and } \mathrm{div}(\xi\mathbf{w}) = 0\}.$$

Equivalently, if ω is an I-annulus, and using the notation from Theorem 9.3.12,

$$\|\mathbf{u}\|^2_{\mathbf{X}} = \mathfrak{a}_\xi(\mathbf{u},\mathbf{u}) \;+\; \sum_{1\le i\le I} \left|\langle \xi\mathbf{u}\cdot\boldsymbol{\nu}, 1\rangle_{H^{1/2}(\gamma_i)}\right|^2$$

defines a norm in $\mathbf{X}_N(\omega;\xi)$;

$$\|\mathbf{u}\|^2_{\mathbf{X}} = \mathfrak{a}_\xi(\mathbf{u},\mathbf{u}) \;+\; \sum_{1\le i\le I} \left|\langle \xi\mathbf{u}\cdot\boldsymbol{\nu}, 1\rangle_{H^{1/2}(\sigma_i)}\right|^2$$

defines a norm in $\mathbf{X}_T(\omega;\xi)$.

Remark 9.3.14 *Let us remark that $\boldsymbol{H}(\mathbf{curl},\Omega)\cap\boldsymbol{H}(\mathrm{div}\,\xi,\Omega)\supset\boldsymbol{X}_A(\Omega;\xi)\supset\boldsymbol{X}(\Omega;\xi)$, and similarly, $\mathbf{H}(\mathrm{curl},\omega)\cap\mathbf{H}(\mathrm{div}\,\xi,\omega)\supset\mathbf{X}_A(\omega;\xi)\supset\mathbf{X}(\omega;\xi)$ and that any $\mathbf{u}\in\mathbf{X}_A(\omega)$ such that $\mathbf{u}\cdot\boldsymbol{\tau}_{|\gamma_A}\in H^{1/2}(\gamma_A)$ can be decomposed into*

$$\mathbf{u} = \mathbf{v}+\mathbf{e},\ \text{with } \mathbf{v}\in\mathbf{X}(\omega),\ \mathbf{e}\in\mathbf{H}^1(\omega) \text{ and } \mathbf{e}\cdot\boldsymbol{\tau}_{|\gamma_P},\ \text{respectively } \mathbf{e}\cdot\boldsymbol{\nu}_{|\gamma_P} = 0.$$

9.3.2 Axisymmetric setting (fully axisymmetric model)

Now, we consider invariant (respectively contravariant)-by-rotation scalar (respectively vector) fields on the axisymmetric domain Ω. The spaces made of such fields will be denoted by a breve sign over their symbol: $\breve{L}^2(\Omega)$, $\breve{\boldsymbol{H}}(\mathbf{curl},\Omega)$, $\breve{\boldsymbol{X}}_N(\Omega)$... In this subsection, we shall also put a breve over the letters designating the axisymmetric fields themselves, in order to distinguish $\breve{f}$, $\breve{\boldsymbol{F}}$ (defined on Ω) from their traces in a meridian half-plane f, $\boldsymbol{F}$ (defined on ω).

We shall give (without proofs) the characterisation of the most useful axisymmetric spaces by their traces in a meridian half-plane. These are function spaces defined on ω, which turn out to be weighted Sobolev spaces: the notations are the same as in [45], where the interested reader can find the proofs and the most general versions of the subsequent statements. The main "building blocks" for constructing these spaces are the following:

$$L^2_\tau(\omega) = \{f \text{ measurable on } \omega : \int_\omega |f|^2\, r^\tau\, dr\, dz < \infty\}, \quad \text{for } \tau \in \mathbb{R},$$
$$H^s_\tau(\omega) = \{f \in L^2_\tau(\omega) : \partial_r^l \partial_z^m f \in L^2_\tau(\omega), \forall\, l, m,\ 0 \le l + m \le s\}.$$

The scale $(H^s_\tau(\omega))_{s\ge 0}$ is extended to non-integral values of s by interpolation, as in Definitions 2.1.17 and 4.1.21. The canonical norm of these spaces will be denoted, respectively, $\|\cdot\|_{0,\tau}$, and $\|\cdot\|_{s,\tau}$. A prominent role will be played by $L^2_1(\omega)$, which appears as the space of traces of scalar fields in $L^2(\Omega)$, and cylindrical coordinates of vector fields in $\boldsymbol{L}^2(\Omega)$. Upon this space, we build another, dimensionally homogeneous Sobolev scale $(V^s_1(\omega))_{s\ge 0}$, defined as

$$V^s_1(\omega) := \left\{w \in H^s_1(\omega) : r^{\ell+m-s}\, \partial_r^\ell \partial_z^m w \in L^2_1(\omega),\ \forall \ell, m \text{ s.t. } 0 \le \ell + m \le \lfloor s \rfloor\right\},$$

where $\lfloor s \rfloor$ denotes the integral part of s. One can check that the general definition reduces to

$$V^s_1(\omega) = \left\{w \in H^s_1(\omega) : \partial_r^j w\big|_{\gamma_a} = 0, \text{ for all } j \in \mathbb{N} \text{ s.t. } j < s - 1\right\}, \tag{9.86}$$

when s is not an integer, while for the first values of $s \in \mathbb{N}$, we have:

$$V^0_1(\omega) = L^2_1(\omega), \quad V^1_1(\omega) = H^1_1(\omega) \cap L^2_{-1}(\omega), \quad V^2_1(\omega) = H^2_1(\omega) \cap H^1_{-1}(\omega).$$

The canonical norm of $V^s_1(\omega)$ is denoted by $|\!|\!|\cdot|\!|\!|_{s,1}$; it is equivalent to $|\cdot|_{s,1}$, except for $s \in \mathbb{N} \setminus \{0\}$. It is worth noting [44, Prop. 1.e.1] that, for $m \in \mathbb{N}$ and $\sigma \in (0,1)$, $V^{m+\sigma}_1(\omega)$ is the interpolate of order σ between $V^m_1(\omega)$ and $V^{m+1}_1(\omega)$.

In order to handle the Dirichlet condition, we introduce the subspaces $H^s_{1,\diamond}(\omega)$ and $V^s_{1,\diamond}(\omega)$ of functions that vanish on the *physical boundary* γ_b. The difference in the notation is to remind us of the following fact.

Proposition 9.3.15 *Let $w \in V^1_1(\omega)$. Then, $w_{|\gamma_a} = 0$ in the sense of $L^2(\gamma_a)$.*

Proof. See [163, Prop. 4.1] or [17, Proposition 3.18]. ■

For $s > 1$, the functions of $V^s_1(\omega)$ even vanish in a strong sense on the axis (see (9.86)).

We now characterise the traces of axisymmetric scalar and vector Sobolev spaces of exponent smaller than two, which are the only ones we shall need in this book.

Proposition 9.3.16 *Let $\breve{f}$ be an invariant-by-rotation scalar field defined on Ω, and f its trace in a meridian half-plane. Then, we have the following equivalences:*

$$\begin{aligned}
&\breve{f} \in \breve{L}^2(\Omega) \iff f \in L^2_1(\omega), \quad \breve{f} \in \breve{H}^s(\Omega) \iff f \in H^s_1(\omega), \quad \textit{for } 0 \le s < 2,\\
&\breve{f} \in \breve{H}^2(\Omega) \iff f \in H^2_1(\omega) \textit{ and } \partial_r f \in L^2_{-1}(\omega).
\end{aligned}$$

Let $\breve{\boldsymbol{F}}$ be a contravariant-by-rotation vector field defined on Ω, and $\boldsymbol{F}$ its trace in a meridian half-plane. Then, we have the following equivalences:

$$\begin{aligned}
&\breve{\boldsymbol{F}} \in \breve{\boldsymbol{L}}^2(\Omega) \iff \boldsymbol{F} \in L^2_1(\omega)^3 := \boldsymbol{L}^2_1(\omega),\\
&\breve{\boldsymbol{F}} \in \breve{\boldsymbol{H}}^s(\Omega) \iff (F_r, F_\theta, F_z) \in H^s_1(\omega) \times H^s_1(\omega) \times H^s_1(\omega), \quad \textit{for } 0 \le s < 1.\\
&\breve{\boldsymbol{F}} \in \breve{\boldsymbol{H}}^s(\Omega) \iff (F_r, F_\theta, F_z) \in V^s_1(\omega) \times V^s_1(\omega) \times H^s_1(\omega), \quad \textit{for } 1 \le s < 2.
\end{aligned}$$

Equivalently, the characterisation (9.86) *of $V^s_1(\omega)$ shows that the meridian components of fields in $\boldsymbol{H}^s(\Omega)$ span the space*

$$\mathcal{H}^s(\omega) := \{\mathbf{F}_m : \boldsymbol{F} \in \boldsymbol{H}^s(\Omega)\} = V^s_1(\omega) \times H^s_1(\omega),$$

while the azimuthal components span $V^s_1(\omega)$. If $\breve{f}$ or $\breve{\boldsymbol{F}}$ vanishes on Γ, then f, respectively the coordinates of $\boldsymbol{F}$ belong to the space $H^s_{1,\diamond}(\omega)$ or $V^s_{1,\circ}(\omega)$.

Let us now examine the spaces related to the divergence and curl operators. Similarly to Definition 9.3.4, we introduce some axisymmetric equivalents of the $\boldsymbol{H}(\mathrm{div})$ and $\boldsymbol{H}(\mathbf{curl})$ spaces.

Definition 9.3.17 *Recall the axisymmetric divergence and scalar curl operators from* (9.37) *and* (9.39)*. Using the notation $\mathbf{L}^2_1(\omega)^2 := L^2_1(\omega)^2$, we call:*

$$\begin{aligned}
\mathbf{H}(\underline{\mathrm{div}}, \omega) &= \left\{\mathbf{u} \in \mathbf{L}^2_1(\omega) : \underline{\mathrm{div}}\, \mathbf{u} \in L^2_1(\omega)\right\},\\
\mathbf{H}(\underline{\mathrm{div}}\, \xi, \omega) &= \left\{\mathbf{u} \in \mathbf{L}^2_1(\omega) : \underline{\mathrm{div}}(\xi\, \mathbf{u}) \in L^2_1(\omega)\right\},\\
\mathbf{H}_\diamond(\underline{\mathrm{div}}\, \xi, \omega) &= \{\mathbf{u} \in \mathbf{H}(\underline{\mathrm{div}}\, \xi, \omega) : \mathbf{u} \cdot \boldsymbol{\nu} = 0 \textit{ on } \gamma_b\}\ ;\\
\mathbf{H}(\underline{\mathrm{curl}}, \omega) &= \left\{\mathbf{u} \in \mathbf{L}^2_1(\omega) : \underline{\mathrm{curl}}\, \mathbf{u} \in L^2_1(\omega)\right\},\\
\mathbf{H}_\diamond(\underline{\mathrm{curl}}, \omega) &= \{\mathbf{u} \in \mathbf{H}(\underline{\mathrm{curl}}, \omega) : \mathbf{u} \cdot \boldsymbol{\tau} = 0 \textit{ on } \gamma_b\}.
\end{aligned}$$

On the other hand, the space that would likely be denoted $H(\underline{\mathbf{grad}}, \omega)$ is $H^1_1(\omega)$, while $H(\underline{\mathbf{curl}}, \omega)$ is, in fact, $V^1_1(\omega)$. To prove this, we need an imbedding result, which will be useful now and then.

Lemma 9.3.18 *The space $H^1_{-1}(\omega)$ is continuously imbedded in $L^2_{-3}(\omega)$.*

Proof. This is a Hardy inequality (see [17, Lemma 4.9]). ■

Proposition 9.3.19 *It holds that:*

$$\underline{\mathbf{curl}}\, v \in L^2_1(\omega) \iff (rv) \in H^1_{-1}(\omega) \iff v \in V^1_1(\omega).$$

Proof. The first equivalence stems from the definition (9.38) of $\underline{\mathbf{curl}}$. The second can be obtained through simple calculations, using the previous Lemma, together with the obvious fact that a function is $L^2_\tau(\omega)$ if, and only if, its product by r belongs to $L^2_{\tau-2}(\omega)$. ■

Thanks to the formulas (9.37)–(9.39), one easily proves:

Proposition 9.3.20 *Let $\breve{\boldsymbol{F}}$ be a contravariant-by-rotation vector field on Ω, and $\boldsymbol{F} = \mathbf{F}_m + F_\theta\, \boldsymbol{e}_\theta$ its trace. Let $\breve{\xi}$ be a measurable, invariant-by-rotation function satisfying*[9] $0 < \xi_* \leq \breve{\xi}(r,\theta,z) \leq \xi^*$ *a.e. on Ω for some constants ξ_*, ξ^*. Then, the following characterisations hold true:*

$$\begin{aligned}
\breve{\boldsymbol{F}} \in \breve{\boldsymbol{H}}(\mathbf{curl},\Omega) &\iff \mathbf{F}_m \in \mathbf{H}(\underline{\mathrm{curl}},\omega) \text{ and } F_\theta \in V^1_1(\omega)\,;\\
\breve{\boldsymbol{F}} \in \breve{\boldsymbol{H}}_0(\mathbf{curl},\Omega) &\iff \mathbf{F}_m \in \mathbf{H}_\diamond(\underline{\mathrm{curl}},\omega) \text{ and } F_\theta \in V^1_{1,\circ}(\omega)\,;\\
\breve{\boldsymbol{F}} \in \breve{\boldsymbol{H}}(\mathrm{div}\,\breve{\xi},\Omega) &\iff \mathbf{F}_m \in \mathbf{H}(\underline{\mathrm{div}}\,\xi,\omega) \text{ and } F_\theta \in L^2_1(\omega)\,;\\
\breve{\boldsymbol{F}} \in \breve{\boldsymbol{H}}_0(\mathrm{div}\,\breve{\xi},\Omega) &\iff \mathbf{F}_m \in \mathbf{H}_\diamond(\underline{\mathrm{div}}\,\xi,\omega) \text{ and } F_\theta \in L^2_1(\omega).
\end{aligned}$$

From the above results, one can characterise the trace spaces of the "natural" 3D spaces for the augmented formulations.

Proposition 9.3.21 *Under the assumptions of Proposition 9.3.20, it holds that*

$$\begin{aligned}
\breve{\boldsymbol{F}} \in \breve{\boldsymbol{X}}_N(\Omega;\varepsilon) &\iff \mathbf{F}_m \in \mathbf{X}_N(\omega;\varepsilon) \text{ and } F_\theta \in V^1_{1,\circ}(\omega)\,;\\
\breve{\boldsymbol{F}} \in \breve{\boldsymbol{X}}_T(\Omega;\mu) &\iff \mathbf{F}_m \in \mathbf{X}_T(\omega;\mu) \text{ and } F_\theta \in V^1_1(\omega)\,;\\
\breve{\boldsymbol{F}} \in \breve{\boldsymbol{X}}_{N,A}(\Omega;\varepsilon) &\iff \mathbf{F}_m \in \mathbf{X}_{N,A}(\omega;\varepsilon) \text{ and } F_\theta \in V^1_1(\omega),\ F_\theta = 0 \text{ on } \gamma_P\,;\\
\breve{\boldsymbol{F}} \in \breve{\boldsymbol{X}}_{T,A}(\Omega;\mu) &\iff \mathbf{F}_m \in \mathbf{X}_{T,A}(\omega;\mu) \text{ and } F_\theta \in V^1_1(\omega),
\end{aligned}$$

where the "natural" spaces of two-dimensional fields in the meridian section are defined as

$$\begin{aligned}
\mathbf{X}_N(\omega;\varepsilon) &= \mathbf{H}_\diamond(\underline{\mathrm{curl}},\omega) \cap \mathbf{H}(\underline{\mathrm{div}}\,\varepsilon,\omega),\\
\mathbf{X}_T(\omega;\mu) &= \mathbf{H}(\underline{\mathrm{curl}},\omega) \cap \mathbf{H}_\diamond(\underline{\mathrm{div}}\,\mu,\omega),\\
\mathbf{X}_{N,A}(\omega;\varepsilon) &= \{\mathbf{u} \in \mathbf{H}(\underline{\mathrm{curl}},\omega) \cap \mathbf{H}(\underline{\mathrm{div}}\,\varepsilon,\omega) : \mathbf{u}\cdot\boldsymbol{\tau}_{|\gamma_b} \in L^2_1(\gamma_b),\ \mathbf{u}\cdot\boldsymbol{\tau}_{|\gamma_P} = 0\},\\
\mathbf{X}_{T,A}(\omega;\mu) &= \{\mathbf{u} \in \mathbf{H}(\underline{\mathrm{curl}},\omega) \cap \mathbf{H}(\underline{\mathrm{div}}\,\mu,\omega) : \mathbf{u}\cdot\boldsymbol{\tau}_{|\gamma_b} \in L^2_1(\gamma_b),\ \mathbf{u}\cdot\boldsymbol{\nu}_{|\gamma_P} = 0\}.
\end{aligned}$$

In the above notations, we may omit the subscripts $_{N,\ T}$ or coefficients ε, μ in the same circumstances as in the plane case.

The properties of these spaces parallel those of their three-dimensional and plane counterparts. Topological conditions are more intricate than in the plane case: simple connectivity and connected boundary are no longer equivalent, for instance. A simple assumption that trivialises the topology of the axisymmetric domain is the following.

[9] See footnote [8], p. 346.

Definition 9.3.22 *Let ω be a domain in the plane (r, z). It is said to have a* simple axisymmetric topology*, or to be a* SAT domain*, if, and only if, the following three conditions are satisfied:*

1. *ω is included in the half plane $[r > 0]$;*
2. *$\partial\omega$ is a Jordan curve;*
3. *both $\gamma_a := \{\mathbf{x} \in \partial\omega : r(\mathbf{x}) = 0\}$ and $\gamma_b := \{\mathbf{x} \in \partial\omega : r(\mathbf{x}) > 0\}$ are connected and have a non-zero length.*

All this implies that the axisymmetric domain Ω generated by the rotation of ω around γ_a is simply connected, and that its boundary Γ is connected.

Theorem 9.3.23 *The imbedding of $\mathbf{X}(\omega; \xi)$ into $\mathbf{L}^2_1(\omega)$ is compact. As a consequence, when ω is a SAT domain, the semi-norm $\|\mathbf{u}\|_{\mathbf{X}} = \mathfrak{a}_\xi(\mathbf{u}, \mathbf{u})^{1/2}$, where*

$$\mathfrak{a}_\xi(\mathbf{u}, \mathbf{v}) := \int_\omega \{w_1 \ \underline{\mathrm{curl}}\, \mathbf{u} \ \underline{\mathrm{curl}}\, \mathbf{v} + w_2 \ \underline{\mathrm{div}}(\xi \mathbf{u}) \ \underline{\mathrm{div}}(\xi \mathbf{v})\} \, r \, d\omega, \tag{9.87}$$

and the measurable weight functions w_1, w_2 satisfy $0 < w_{i*} \le w_i(r, z) \le w_i^* < \infty$ for a.e. $(r, z) \in \omega$, defines a norm on $\mathbf{X}(\omega; \xi)$, which is equivalent to the $\mathbf{H}(\underline{\mathrm{curl}}, \omega) \cap \mathbf{H}(\underline{\mathrm{div}}\, \xi, \omega)$-graph norm.

More generally, assume that ω is an I-annulus (as defined in Theorem 9.3.12) included in the half plane $[r > 0]$ (see Figure 9.2). Then, each

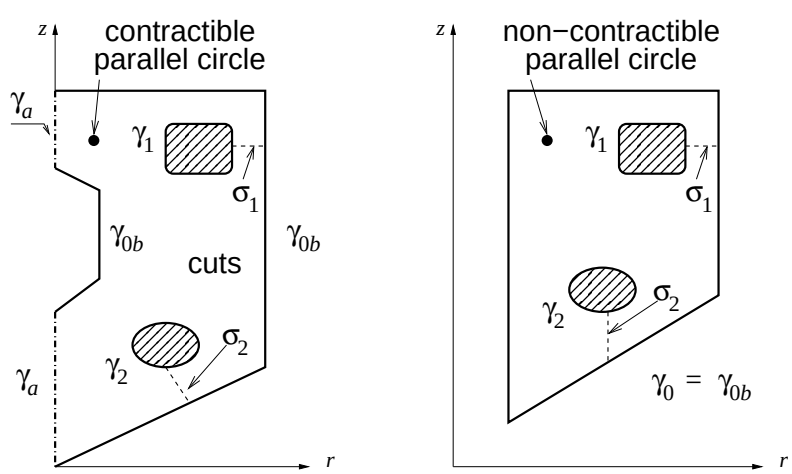

Fig. 9.2. Topological conditions for an axisymmetric domain Ω and its meridian section ω.

of the inner boundaries $(\gamma_i)_{1 \le i \le I}$ generates a connected component of Γ; but the total number $K + 1$ of these components can be greater than $I + 1$, as $\gamma_{0b} := \gamma_0 \cap \gamma_b$ can be disconnected. On the other hand, each cut $(\sigma_i)_{1 \le i \le I}$

associated with γ_i generates an axisymmetric manifold Σ_i that serves as a cut for Ω, which is "seen" by the meridian components of vector fields. But there is another possible non-triviality in the topology of Ω, as seen in the right-hand part of Figure 9.2. If $\gamma_a = \emptyset$, i.e., $\gamma_0 = \gamma_{0b}$, a parallel circle drawn in Ω (i.e., the set of points of cylindrical coordinates (r_0, θ, z_0), with $(r_0, z_0) \in \omega$ and $\theta \in \mathbb{S}^1$) cannot be contracted to a point. Similarly, the vector field $\boldsymbol{u} = r^{-1}\,\boldsymbol{e}_\theta \in \boldsymbol{C}^1(\Omega)$ has zero curl, but it is not the gradient of a (single-valued) function in Ω. In this case, a meridian section serves as a cut; this non-triviality is only "felt" by the azimuthal components of vector fields (cf. Eq. (9.67)). The issue disappears if γ_a has a non-zero length (see Figure 9.2, left); in the limiting case when $\gamma_a \neq \emptyset$ had zero length, Ω would not be a domain, in the sense that it is not everywhere on one side only of its boundary.

Finally, the following adaptation of Theorem 9.3.13 holds.

Theorem 9.3.24 *In a general domain ω, the following expression defines a norm in $\mathbf{X}(\omega;\xi)$, equivalent to the graph norm:*

$$\|\mathbf{u}\|^2_{\mathbf{X}} = \mathfrak{a}_\xi(\mathbf{u},\mathbf{u}) + \|P_{\mathbf{Z}^\xi}\mathbf{u}\|^2_{0,1}\,,$$

where $P_{\mathbf{Z}^\xi}$ designates the orthogonal (in both $\mathbf{L}^2_1(\omega)$ and $\mathbf{H}(\underline{\mathrm{curl}},\omega)\cap\mathbf{H}(\underline{\mathrm{div}}\,\xi,\omega)$-graph norms) projection onto the subspace

$$\mathbf{Z}(\omega;\xi) := \{\mathbf{w} \in \mathbf{X}(\omega;\xi) : \underline{\mathrm{curl}}\,\mathbf{w} = 0 \text{ and } \underline{\mathrm{div}}(\xi\mathbf{w}) = 0\}.$$

Equivalently, if ω is an I-annulus, as in Figure 9.2, let $(\gamma_{b,k})_{1\le k\le K}$ designate both the $(\gamma_i)_{1\le i\le I}$ and the connected components of γ_{0b}, except the one that separates ω from an unbounded subset of the half-plane $[r>0]$. Then,

$$\|\mathbf{u}\|^2_{\mathbf{X}} = \mathfrak{a}_\xi(\mathbf{u},\mathbf{u}) \;+\; \sum_{1\le k\le K}\left|\langle \xi\mathbf{u}\cdot\boldsymbol{\nu}, 1\rangle_{H^{1/2}_1(\gamma_{b,k})}\right|^2$$

defines a norm in $\mathbf{X}_N(\omega;\xi)$;

$$\|\mathbf{u}\|^2_{\mathbf{X}} = \mathfrak{a}_\xi(\mathbf{u},\mathbf{u}) \;+\; \sum_{1\le i\le I}\left|\langle \xi\mathbf{u}\cdot\boldsymbol{\nu}, 1\rangle_{H^{1/2}_1(\sigma_i)}\right|^2$$

defines a norm in $\mathbf{X}_T(\omega;\xi)$.

9.4 Existence and uniqueness results (2D problems)

In this section, we present existence and uniqueness results for the 2D models, static and time-dependent. The proofs will be omitted, as they either are similar to the three-dimensional (3D) framework, or rely on it. Namely:

- For the fully axisymmetric model, one uses the results from Chapters 5-6. Invoking the Curie principle (Propositions 9.2.7 and 9.2.12), the solution to the 3D static and time-dependent equations are axisymmetric if the data are as well. Using §§9.1.1 and 9.2.3, one can rephrase each 3D result as two statements on the meridian and azimuthal components.
- On the other hand, the plane model does not satisfy a finite energy condition in 3D[10]: it is necessary to reason directly in two dimensions. This is not difficult: the properties of the spaces $\mathbf{H}(\mathrm{curl}, \omega)$, $\mathbf{H}(\mathrm{div}, \omega)$, etc., are totally similar to those of their counterparts in a 3D domain. For instance, the integration-by-parts formulas (9.83)–(9.84) allow one to derive similar variational formulations.

Nevertheless, we present the two models at once, as we did in §9.2.4. To this end, we take the conventions of that subsection, plus the following ones.

- The spaces $\mathbf{X}(\omega; \xi)$, $\mathbf{X}_A(\omega; \xi)$ are those of Proposition 9.3.6 in the plane model, and Proposition 9.3.21 in the fully axisymmetric model. The other spaces are itemised in Table 9.1.
- The scalar product $(\cdot \mid \cdot)$, without any subscript, is that of $L^2(\omega)$ or $\mathbf{L}^2(\omega)$ in the plane model, and that of $L^2_1(\omega)$ or $\mathbf{L}^2_1(\omega)$ in the fully axisymmetric model.
- The subscript $_{zmv}$ designates subspaces of functions f such that $(f \mid 1) = 0$; i.e., in the fully axisymmetric model, the "zero mean value" is taken with respect to the weight function r.

To simplify the discussion and avoid some technicalities, we assume that the charge density ϱ belongs to $L^2(\omega)$, respectively $L^2_1(\omega)$. The regularity parameter s of Chapters 6 and 7 is thus taken as $s = 0$; and we omit it from the notation $\mathbf{X}_N(\omega; \varepsilon)$.

9.4.1 Static problems

Theorem 9.4.1 *Let ω be a Jordan or SAT domain (Definitions 9.3.8 and 9.3.22), and let $\mathbf{J} \in \mathbf{L}(\omega)$, with $\mathrm{div}\, \mathbf{J} = 0$, and $\varrho \in F^{-1}(\omega)$. The static TE model (9.62)–(9.67) admits a unique solution $(\mathbf{E}, H) \in \mathbf{X}_N(\omega; \varepsilon) \times X_T(\omega)$, which depends continuously on the data $(\varrho, \mathbf{J})$ in the aforementioned spaces.*

When γ or γ_b is not connected (cf. Theorems 9.3.13 and 9.3.24), the problem is still well-posed if supplemented with the data of:

- *either the projection $\mathsf{e} = P_{\mathbf{Z}^\varepsilon_N} \mathbf{E}$ of $\mathbf{E}$ onto the space $\mathbf{Z}_N(\omega; \varepsilon)$;*
- *or the fluxes $(\langle \varepsilon \mathbf{E} \cdot \boldsymbol{\nu}, 1 \rangle)_{1 \le k \le K}$ of $\varepsilon \mathbf{E}$ on the connected components $(\gamma_k)_{1 \le k \le K}$ or $(\gamma_{b,k})_{1 \le k \le K}$, excepting the component which separates ω from an unbounded exterior domain.*

[10] See footnote [1], p. 328.

Table 9.1. Notations of §9.4.

Spaces	Plane	Fully axi.	Spaces	Plane	Fully axi.
$X_N(\omega)$	$H_0^1(\omega)$	$V_{1,\circ}^1(\omega)$	$L(\omega)$	$L^2(\omega)$	$L_1^2(\omega)$
$X_T(\omega)$	$H_{zmv}^1(\omega)$	$V_1^1(\omega)$	$\mathbf{L}(\omega)$	$\mathbf{L}^2(\omega)$	$\mathbf{L}_1^2(\omega)$
$X_N(\omega)$	see (9.96)	see (9.97)	$F^0(\omega)$	$H_0^1(\omega)$	$H_{1,\diamond}^1(\omega)$
$X_{T,A}(\omega)$	$H_{zmv}^1(\omega)$	$V_1^1(\omega)$	$F^{-1}(\omega)$	$L^2(\omega)$	$L_1^2(\omega)$
$Q_N(\omega)$	$L^2(\omega)$	$L_1^2(\omega)$	$F^{-2}(\omega)$	$H^{-1}(\omega)$	$H_{1,\diamond}^1(\omega)'$
$Q_T(\omega)$	$L_{zmv}^2(\omega)$	$L_{1,zmv}^2(\omega)$	$\mathbf{C}(\omega)$	$\mathbf{H}(\mathrm{curl},\omega)$	$\mathbf{H}(\underline{\mathrm{curl}},\omega)$
$L(\gamma_A)$	$L^2(\gamma_A)$	$L_1^2(\gamma_A)$	$\mathbf{C}_0(\omega)$	$\mathbf{H}_0(\mathrm{curl},\omega)$	$\mathbf{H}_\diamond(\underline{\mathrm{curl}},\omega)$

The duality brackets are to be taken between $H^{-1/2}(\gamma_k)$ and $H^{1/2}(\gamma_k)$, respectively $H_1^{-1/2}(\gamma_k)$ and $H_1^{1/2}(\gamma_k)$; this is equivalent to the knowledge of the total surface charge on these components.

Theorem 9.4.2 *Let ω be a Jordan or SAT domain, and let $J \in L(\omega)$. The static TM model* (9.68)–(9.72) *admits a unique solution $(\mathbf{H}, E) \in \mathbf{X}_T(\omega;\mu) \times X_N(\omega)$, which depends continuously on J.*

In the more general case, when ω is an I-annulus (cf. Theorems 9.3.13 and 9.3.24), the problem is still well-posed if supplemented with the data of:

- *either the projection $\mathtt{h} = P_{\mathbf{Z}_T^\mu}\mathbf{H}$ of $\mathbf{H}$ onto the space $\mathbf{Z}_T(\omega;\mu)$;*
- *or the fluxes $(\langle \mu\mathbf{H}\cdot\boldsymbol{\nu}, 1\rangle)_{1\le i\le I}$ of $\mu\mathbf{H}$ through the cuts $(\sigma_i)_{1\le i\le I}$.*

The duality brackets are as in the previous theorem.

9.4.2 Time-dependent problems (standard regularity)

We focus on augmented formulations (as in §7.4) for the transversal components; recall that the longitudinal components are solutions to scalar wave equations. However, similar results can be obtained through the semi-group theory, or using unaugmented variational formulations. To begin with, we examine the cavity problem.

We first consider the TE system (9.45)–(9.52). In all cases, we assume that the initial conditions satisfy

$$(\mathbf{E}_0, \mathbf{E}_1, H_0, H_1) \in \mathbf{X}_N(\omega;\varepsilon) \times \mathbf{L}(\omega) \times X_T(\omega) \times L(\omega).$$

Theorem 9.4.3 *Assume that the right-hand sides* $(\varrho, \mathbf{J})$ *have the regularity*

$$\mathbf{J} \in H^1(0,T;\mathbf{L}(\omega))\,; \tag{9.88}$$

$$\textit{either:} \quad \varrho \in L^2(0,T;F^0(\omega)), \quad \textit{or:} \quad \varrho \in H^1(0,T;F^{-1}(\omega)). \tag{9.89}$$

1. *There is a unique solution to the augmented variational formulation of* (9.73) *and* (9.75)*:*

$$\begin{cases} \textit{Find } \mathbf{E} \in \mathbf{X}_N(\omega;\varepsilon) \textit{ such that} \\ \forall \mathbf{F} \in \mathbf{X}_N(\omega;\varepsilon), \\ \dfrac{d^2}{dt^2}(\varepsilon\mathbf{E} \mid \mathbf{F}) + \alpha_\varepsilon^\mu(\mathbf{E},\mathbf{F}) = -\dfrac{d}{dt}(\mathbf{J} \mid \mathbf{F}) + (\varrho \mid \operatorname{div}\varepsilon\mathbf{F}), \end{cases} \tag{9.90}$$

   where $\alpha_\varepsilon^\mu(\cdot,\cdot)$ *is a particular case of the form* $\mathfrak{a}_\xi$ *of* (9.85), (9.87)*:*

$$\alpha_\varepsilon^\mu(\mathbf{u},\mathbf{v}) := (\mu^{-1}\operatorname{curl}\mathbf{u} \mid \operatorname{curl}\mathbf{v}) + (\operatorname{div}\varepsilon\mathbf{u} \mid \operatorname{div}\varepsilon\mathbf{v}).$$

   This solution has the regularity $\mathbf{E} \in C^0([0,T];\mathbf{X}_N(\omega;\varepsilon)) \cap C^1([0,T];\mathbf{L}(\omega))$*, and depends continuously on the data* $(\mathbf{J},\varrho)$ *in the above spaces.*
2. *Similarly, there is a unique solution to the variational formulation of* (9.74) *and* (9.76)–(9.77)*:*

$$\begin{cases} \textit{Find } H \in X_T(\omega) \textit{ such that} \\ \forall C \in X_T(\omega), \\ \dfrac{d^2}{dt^2}(\mu H \mid C) + (\varepsilon^{-1}\,\mathbf{curl}\,H \mid \mathbf{curl}\,C) = (\varepsilon^{-1}\mathbf{J} \mid \mathbf{curl}\,C). \end{cases} \tag{9.91}$$

   It satisfies $H \in C^0([0,T];X_T(\omega)) \cap C^1([0,T];L(\omega)))$*, with continuous dependence on* $\mathbf{J}$*.*
3. *If the charge conservation equation* (9.48) *holds — which implies* $\varrho \in H^2(0,T;F^{-2}(\omega))$ *— and the initial data satisfies* $\operatorname{div}\varepsilon\mathbf{E}_0 = \varrho(0)$*, then* $(\mathbf{E},H)$ *is the solution to the TE Maxwell equations* (9.45)–(9.52) *between the times* $t=0$ *and* $t=T$*.*

Next, we transpose the results of Theorem 7.4.9.

Theorem 9.4.4 *Assume that the right-hand sides satisfy* (9.88) *and* either one *of the two conditions:*

$$\left.\begin{array}{l} \varrho \in L^2(0,T;F^0(\omega)) \cap C^0([0,T];F^{-1}(\omega)) \cap H^2(0,T;F^{-2}(\omega)), \\ \text{or:} \quad \varrho \in H^1(0,T;F^{-1}(\omega)) \cap H^2(0,T;F^{-2}(\omega))\,; \end{array}\right\} \tag{9.92}$$

while the initial data and values satisfy

$$\operatorname{div}\varepsilon\mathbf{E}_0 = \varrho(0), \qquad \varrho'(0) + \operatorname{div}\mathbf{J}(0) = 0. \tag{9.93}$$

1. *There is a unique solution to the mixed augmented variational formulation of* (9.73) *and* (9.75)*:*

$$\begin{cases} \textit{Find } (\mathbf{E}, P_E) \in \mathbf{X}_N(\omega;\varepsilon) \times Q_N(\omega) \textit{ such that} \\ \forall \mathbf{F} \in \mathbf{X}_N(\omega;\varepsilon), \\ \dfrac{d^2}{dt^2}(\varepsilon\mathbf{E} \mid \mathbf{F}) + \alpha_\varepsilon^\mu(\mathbf{E},\mathbf{F}) + (P_E \mid \operatorname{div}\varepsilon\mathbf{F}) = -\dfrac{d}{dt}(\mathbf{J} \mid \mathbf{F}) + (\varrho \mid \operatorname{div}\varepsilon\mathbf{F}), \\ \forall q \in Q_N(\omega), \quad (\operatorname{div}\varepsilon\mathbf{E} \mid q) = (\varrho \mid q)\,; \end{cases}$$

and it has the regularity:

$$\mathbf{E} \in C^0([0,T];\mathbf{X}_N(\omega;\varepsilon)) \cap C^1([0,T];\mathbf{L}(\omega)), \quad P_E \in L^2(0,T;Q_N(\omega)).$$

2. *Assuming, moreover, that* (9.48) *holds and* H *is the solution to* (9.91), *then* $(\mathbf{E}, H)$ *is the solution to the TE Maxwell equations between* $t = 0$ *and* $t = T$.

We now turn to the TM system (9.54)–(9.61). In all cases, we assume that the initial conditions satisfy

$$(\mathbf{H}_0, \mathbf{H}_1, E_0, E_1) \in \mathbf{X}_T(\omega;\mu) \times \mathbf{L}(\omega) \times X_N(\omega) \times L(\omega).$$

Theorem 9.4.5 *Assume that the right-hand side* J *satisfies*

$$J \in H^1(0,T;L(\omega)). \tag{9.94}$$

1. *There is a unique solution to the augmented variational formulation of* (9.79) *and* (9.81)–(9.82)*:*

$$\begin{cases} \textit{Find } \mathbf{H} \in \mathbf{X}_T(\omega;\mu) \textit{ such that} \\ \forall \mathbf{C} \in \mathbf{X}_T(\omega;\mu), \quad \dfrac{d^2}{dt^2}(\mu\mathbf{H} \mid \mathbf{C}) + \alpha_\mu^\varepsilon(\mathbf{H},\mathbf{C}) = (\varepsilon^{-1}J \mid \operatorname{curl}\mathbf{C})\,; \end{cases}$$

notice that the indices ε, μ *are reversed with respect to* (9.90). *It has the regularity:*

$$\mathbf{H} \in C^0([0,T];\mathbf{X}_T(\omega;\mu)) \cap C^1([0,T];\mathbf{L}(\omega)),$$

and depends continuously on the data $J \in H^1(0,T;L(\omega))$.

2. *Similarly, there is a unique solution to the variational formulation of* (9.78) *and* (9.80)*:*

$$\begin{cases} \textit{Find } E \in X_N(\omega) \textit{ such that} \\ \forall F \in X_N(\omega), \\ \dfrac{d^2}{dt^2}(\varepsilon E \mid F) + (\mu^{-1}\,\mathbf{curl}\,E \mid \mathbf{curl}\,F) = -\dfrac{d}{dt}(J \mid F), \end{cases} \tag{9.95}$$

which satisfies: $E \in C^0([0,T];X_N(\omega)) \cap C^1([0,T];L(\omega))$, *with continuous dependence on* J.

3. *If the initial data satisfies* $\mathbf{H}_0 \in \mathbf{K}_T(\omega;\mu) := \mathbf{H}_0(\operatorname{div}\mu\,0,\omega) \cap \mathbf{H}(\operatorname{curl},\omega)$, *then* $(E, \mathbf{H})$ *is the solution to the TM Maxwell equations* (9.54)–(9.61) *between the time* $t = 0$ *and* $t = T$, *and it holds that*

$$\mathbf{H} \in C^0([0,T];\mathbf{K}_T(\omega;\mu)) \times C^1([0,T];\mathbf{H}_0(\operatorname{div}\mu\,0,\omega)).$$

Theorem 9.4.6 *Assume* $\mathbf{H}_0 \in \mathbf{K}_T(\omega;\mu)$*, and* $J \in H^1(0,T;L(\omega))$*.*

1. *There is a unique solution to the mixed augmented variational formulation of* (9.79) *and* (9.81)–(9.82)*:*

$$\begin{cases} \text{Find } (\mathbf{H}, P_H) \in \mathbf{X}_T(\omega;\mu) \times Q_T(\omega) \text{ such that} \\ \forall \mathbf{C} \in \mathbf{X}_T(\omega;\mu), \\ \dfrac{d^2}{dt^2}(\mu\mathbf{H} \mid \mathbf{C}) + \alpha_\mu^\varepsilon(\mathbf{H},\mathbf{C}) + (P_H \mid \operatorname{div}\mu\,\mathbf{C}) = (\varepsilon^{-1}J \mid \operatorname{curl}\mathbf{C}), \\ \forall q \in Q_T(\omega), \quad (\operatorname{div}\mu\mathbf{H} \mid q) = 0\,; \end{cases}$$

and it has the regularity

$$\mathbf{H} \in C^0([0,T];\mathbf{K}_T(\omega;\mu)) \cap C^1([0,T];\mathbf{L}(\omega)), \quad P_H \in L^2(0,T;Q_T(\omega)).$$

2. *If* E *is the solution to* (9.95)*, then* $(E,\mathbf{H})$ *is the solution to the TM Maxwell equations* (9.54)–(9.61) *between the time* $t=0$ *and* $t=T$*.*

Now, we proceed to the interior or exterior problem, for which the Silver–Müller boundary conditions (9.50), (9.59) hold on $\gamma_A \neq \emptyset$. As seen in §§9.3.1 and 9.3.2, the relevant spaces for the longitudinal or azimuthal electric fields are

$$X_{N,A}(\omega) := \left\{ w \in H^1(\omega) : w = 0 \text{ on } \gamma_P \right\} \quad \text{(plane model)}\,; \tag{9.96}$$

$$X_{N,A}(\omega) := \left\{ w \in H^1_1(\omega) : w = 0 \text{ on } \gamma_P \right\} \quad \text{(fully axi. model)}\,; \tag{9.97}$$

while for the magnetic fields, it is $X_{T,A}(\omega) = X_T(\omega)$ in both models. The notation $(\cdot \mid \cdot)_A$ denotes the scalar product of $L^2(\gamma_A)$, respectively $L^2_1(\gamma_A)$. We recall that $\delta = -1$ in the fully axisymmetric model, and $\delta = +1$ in the plane model.

We first consider the TE system. In all cases, we assume that the initial conditions satisfy

$$(\mathbf{E}_0, \mathbf{E}_1, H_0, H_1) \in \mathbf{X}_{N,A}(\omega;\varepsilon) \times \mathbf{L}(\omega) \times X_{T,A}(\omega) \times L(\omega).$$

Theorem 9.4.7 *Assume* (9.88) *and* (9.89)*, while the incoming wave* $g^\star$ *(if applicable) satisfies*

$$g^\star \in H^1(0,T;L(\gamma_A)). \tag{9.98}$$

1. *There is a unique solution to the augmented variational formulation of* (9.73) *and* (9.75)*:*

$$\begin{cases} \text{Find } \mathbf{E} \in \mathbf{X}_{N,A}(\omega;\varepsilon) \text{ such that} \\ \forall \mathbf{F} \in \mathbf{X}_{N,A}(\omega;\varepsilon), \\ \dfrac{d^2}{dt^2}(\varepsilon\mathbf{E} \mid \mathbf{F}) + \alpha_\varepsilon^\mu(\mathbf{E},\mathbf{F}) + \sqrt{\dfrac{\varepsilon}{\mu}}\,\dfrac{d}{dt}\left(\overline{\mathbf{F}\cdot\boldsymbol{\tau}} \mid \overline{\mathbf{E}\cdot\boldsymbol{\tau}}\right)_A \\ \qquad\qquad = -\dfrac{d}{dt}(\mathbf{J} \mid \mathbf{F}) + (\varrho \mid \operatorname{div}\varepsilon\mathbf{F}) + \delta\sqrt{\dfrac{\varepsilon}{\mu}}\,\dfrac{d}{dt}\left(\overline{\mathbf{F}\cdot\boldsymbol{\tau}} \mid \overline{g^\star}\right)_A. \end{cases}$$

It has the regularity

$$\mathbf{E} \in C^0([0,T];\mathbf{X}_{N,A}(\omega;\varepsilon)) \cap C^1([0,T];\mathbf{L}(\omega)),$$

and depends continuously on the data $(\mathbf{J},\varrho,g^\star)$ *in the relevant spaces.*

2. *Similarly, there is a unique solution to the variational formulation*[11] *of* (9.74) *and* (9.76)–(9.77)*:*

$$\begin{cases} \textit{Find } H \in X_{T,A}(\omega) \textit{ such that} \\ \forall C \in X_{T,A}(\omega), \\ \dfrac{d^2}{dt^2}(\mu H \mid C) + (\varepsilon^{-1}\,\mathbf{curl}\,H \mid \mathbf{curl}\,C) + \sqrt{\dfrac{\mu}{\varepsilon}}\,\dfrac{d}{dt}\,(H \mid C)_A \\ \qquad\qquad = (\varepsilon^{-1}\mathbf{J} \mid \mathbf{curl}\,C) - \dfrac{d}{dt}\,(g^\star \mid C)_A\,. \end{cases} \tag{9.99}$$

It satisfies $H \in C^0([0,T];X_{T,A}(\omega)) \cap C^1([0,T];L(\omega)))$*, with continuous dependence on* $(\mathbf{J},g^\star)$*.*

3. *If the data have the regularity*

$$\mathbf{J} \in H^2(0,T;\mathbf{L}(\omega)), \quad g^\star \in H^2(0,T;L(\gamma_A)), \tag{9.100}$$

the charge conservation equation (9.48) *holds — which implies* $\varrho \in H^3(0,T;F^{-2}(\omega))$ *— and the initial data and values satisfy*

$$\begin{cases} (\mathbf{E}_1,H_1) \in \mathbf{X}_{N,A}(\omega;\varepsilon) \times X_{T,A}(\omega)\,, \\ \delta\,\mathbf{E}_0\cdot\boldsymbol{\tau} + \sqrt{\varepsilon/\mu}\,H_0 = g^\star(0) \textit{ on } \gamma_A\,, \\ \delta\,\mathbf{E}_1\cdot\boldsymbol{\tau} + \sqrt{\varepsilon/\mu}\,H_1 = (g^\star)'(0) \textit{ on } \gamma_A\,; \end{cases} \tag{9.101}$$

then, $(\mathbf{E},H)$ *is the solution to the TE Maxwell equations* (9.45)–(9.52) *between the times* $t=0$ *and* $t=T$*.*

Theorem 9.4.8 *Assume that* $(\mathbf{J},\varrho,g^\star)$ *satisfy* (9.88)*,* (9.92) *and* (9.98)*, while the initial data and values satisfy* (9.93)*.*

1. *There is a unique solution to the mixed augmented variational formulation of* (9.73) *and* (9.75)*:*

$$\begin{cases} \textit{Find } (\mathbf{E},P_E) \in \mathbf{X}_{N,A}(\omega;\varepsilon) \times Q_N(\omega) \textit{ such that} \\ \forall \mathbf{F} \in \mathbf{X}_{N,A}(\omega;\varepsilon), \\ \dfrac{d^2}{dt^2}(\varepsilon\mathbf{E} \mid \mathbf{F}) + \alpha_\varepsilon^\mu(\mathbf{E},\mathbf{F}) + \sqrt{\dfrac{\varepsilon}{\mu}}\,\dfrac{d}{dt}\,\left(\overline{\mathbf{F}\cdot\boldsymbol{\tau}} \mid \overline{\mathbf{E}\cdot\boldsymbol{\tau}}\right)_A + (P_E \mid \operatorname{div}\varepsilon\mathbf{F}) \\ \qquad\qquad = -\dfrac{d}{dt}(\mathbf{J} \mid \mathbf{F}) + (\varrho \mid \operatorname{div}\varepsilon\mathbf{F}) + \delta\sqrt{\dfrac{\varepsilon}{\mu}}\,\dfrac{d}{dt}\,\left(\overline{\mathbf{F}\cdot\boldsymbol{\tau}} \mid \overline{g^\star}\right)_A\,, \\ \forall q \in Q_N(\omega), \quad (\operatorname{div}\varepsilon\mathbf{E} \mid q) = (\varrho \mid q)\,; \end{cases}$$

and it has the regularity

$$\mathbf{E} \in C^0([0,T];\mathbf{X}_{N,A}(\omega;\varepsilon)) \cap C^1([0,T];\mathbf{L}(\omega)), \quad P_E \in L^2(0,T;Q_N(\omega)).$$

[11] From the definition $\boldsymbol{k}^\star = \sqrt{\varepsilon/\mu}\,\boldsymbol{g}^\star \times \boldsymbol{n}$ (cf. §7.1) we recall that $\sqrt{\mu/\varepsilon}\,\boldsymbol{k}^\star \times \boldsymbol{n} = -\boldsymbol{g}^\star$, as $\boldsymbol{g}^\star$ is tangential.

2. *Assuming, moreover, that* (9.48), (9.100) *and* (9.101) *hold, and that* H *is the solution to* (9.99), *then* $(\mathbf{E}, H)$ *is the solution to the TE Maxwell equations between* $t = 0$ *and* $t = T$.

We now turn to the TM system. In all cases, we assume that the initial conditions satisfy

$$(\mathbf{H}_0, \mathbf{H}_1, E_0, E_1) \in \mathbf{X}_{T,A}(\omega;\mu) \times \mathbf{L}(\omega) \times X_{N,A}(\omega) \times L(\omega).$$

Theorem 9.4.9 *Assume that the current density* J *satisfies* (9.94), *while the incoming wave* $\mathbf{g}^\star$ *(if applicable) satisfies*

$$\mathbf{g}^\star \cdot \boldsymbol{\tau} \in H^1(0,T;L(\gamma_A)). \tag{9.102}$$

1. *There is a unique solution to the augmented variational formulation*[12] *of* (9.79) *and* (9.81)–(9.82)*:*

$$\begin{cases} \textit{Find } \mathbf{H} \in \mathbf{X}_{T,A}(\omega;\mu) \textit{ such that} \\ \forall \mathbf{C} \in \mathbf{X}_{T,A}(\omega;\mu), \\ \dfrac{d^2}{dt^2}(\mu\mathbf{H} \mid \mathbf{C}) + \alpha_\mu^\varepsilon(\mathbf{H},\mathbf{C}) + \sqrt{\dfrac{\mu}{\varepsilon}}\,\dfrac{d}{dt}\left(\mathbf{H}\cdot\boldsymbol{\tau} \mid \mathbf{C}\cdot\boldsymbol{\tau}\right)_A \\ \qquad\qquad = (\varepsilon^{-1}J \mid \operatorname{curl}\mathbf{C}) - \dfrac{d}{dt}\left(\mathbf{g}^\star\cdot\boldsymbol{\tau} \mid \mathbf{C}\cdot\boldsymbol{\tau}\right)_A. \end{cases}$$

   It has the regularity:

$$\mathbf{H} \in C^0([0,T];\mathbf{X}_{T,A}(\omega;\mu)) \cap C^1([0,T];\mathbf{L}(\omega)),$$

   and depends continuously on the data $(J, \mathbf{g}^\star\cdot\boldsymbol{\tau})$ *in the relevant spaces.*
2. *Similarly, there is a unique solution to the variational formulation of* (9.78) *and* (9.80)*:*

$$\begin{cases} \textit{Find } E \in X_{N,A}(\omega) \textit{ such that} \\ \forall F \in X_{N,A}(\omega), \\ \dfrac{d^2}{dt^2}(\varepsilon E \mid F) + (\mu^{-1}\,\mathbf{curl}\,E \mid \mathbf{curl}\,F) + \sqrt{\dfrac{\varepsilon}{\mu}}\,\dfrac{d}{dt}\left(\overline{F} \mid \overline{E}\right)_A \\ \qquad\qquad = -\dfrac{d}{dt}(J \mid F) - \delta\sqrt{\dfrac{\varepsilon}{\mu}}\,\dfrac{d}{dt}\left(\overline{F} \mid \overline{\mathbf{g}^\star\cdot\boldsymbol{\tau}}\right)_A, \end{cases} \tag{9.103}$$

   which satisfies: $E \in C^0([0,T];X_{N,A}(\omega)) \cap C^1([0,T];L(\omega))$, *with continuous dependence on* $(J, \mathbf{g}^\star\cdot\boldsymbol{\tau})$.
3. *If the data have the regularity*

$$J \in H^2(0,T;L(\omega)), \quad \mathbf{g}^\star\cdot\boldsymbol{\tau} \in H^2(0,T;L(\gamma_A))\,; \tag{9.104}$$

   and the initial data and values satisfy

[12] See footnote [11].

$$\begin{cases} \mathbf{H}_0 \in \mathbf{K}_{T,A}(\omega;\mu) := \mathbf{H}(\operatorname{div}\mu\, 0,\omega) \cap \mathbf{X}_{T,A}(\omega;\mu)\,, \\ (\mathbf{H}_1, E_1) \in \mathbf{K}_{T,A}(\omega;\mu) \times X_{N,A}(\omega)\,, \\ -\delta\, E_0 + \sqrt{\varepsilon/\mu}\,\mathbf{H}_0 \cdot \boldsymbol{\tau} = \mathbf{g}^\star(0) \cdot \boldsymbol{\tau} \ \text{ on } \gamma_A\,, \\ -\delta\, E_1 + \sqrt{\varepsilon/\mu}\,\mathbf{H}_1 \cdot \boldsymbol{\tau} = (\mathbf{g}^\star)'(0) \cdot \boldsymbol{\tau} \ \text{ on } \gamma_A\,, \end{cases} \tag{9.105}$$

then $(E, \mathbf{H})$ *is the solution to the TM Maxwell equations* (9.54)–(9.61) *between the time* $t = 0$ *and* $t = T$*, and it holds that*

$$\mathbf{H} \in C^0([0,T]; \mathbf{K}_{T,A}(\omega;\mu)) \times C^1([0,T]; \mathbf{H}_{0,\gamma_P}(\operatorname{div}\mu\, 0,\omega)).$$

Theorem 9.4.10 *Assume* $\mathbf{H}_0 \in \mathbf{K}_T(\omega;\mu)$*, and* $(J, \mathbf{g}^\star)$ *satisfy* (9.94) *and* (9.102)*.*

1. *There is a unique solution to the mixed augmented variational formulation of* (9.79) *and* (9.81)–(9.82)*:*

$$\begin{cases} \text{Find } (\mathbf{H}, P_H) \in \mathbf{X}_{T,A}(\omega;\mu) \times Q_T(\omega) \text{ such that} \\ \forall \mathbf{C} \in \mathbf{X}_{T,A}(\omega;\mu), \\ \dfrac{d^2}{dt^2}(\mu\mathbf{H} \mid \mathbf{C}) + \alpha_\mu^\varepsilon(\mathbf{H}, \mathbf{C}) + \sqrt{\dfrac{\mu}{\varepsilon}}\,\dfrac{d}{dt}\,(\mathbf{H}\cdot\boldsymbol{\tau} \mid \mathbf{C}\cdot\boldsymbol{\tau})_A + (P_H \mid \operatorname{div}\mu\,\mathbf{C}) \\ \qquad\qquad = (\varepsilon^{-1} J \mid \operatorname{curl}\mathbf{C}) - \dfrac{d}{dt}\,(\mathbf{g}^\star\cdot\boldsymbol{\tau} \mid \mathbf{C}\cdot\boldsymbol{\tau})_A\,, \\ \forall q \in Q_T(\omega), \quad (\operatorname{div}\mu\mathbf{H} \mid q) = 0\,; \end{cases}$$

   and it has the regularity

$$\mathbf{H} \in C^0([0,T]; \mathbf{X}_{T,A}(\omega;\mu)) \cap C^1([0,T]; \mathbf{L}(\omega)), \quad P_H \in L^2(0,T; Q_T(\omega)).$$

2. *Assuming, moreover, that* (9.104) *and* (9.105) *hold, and that* E *is the solution to* (9.103)*, then* $(E, \mathbf{H})$ *is the solution to the TM Maxwell equations* (9.54)–(9.61) *between the time* $t = 0$ *and* $t = T$*.*

9.4.3 Time-dependent problems (improved regularity)

In this section, we adapt the results of §7.6 to the 2D case. For ease of exposition, we do not separate between the TE and TM systems, but between the vector (transversal or meridian) and scalar (longitudinal or azimuthal) components of $\boldsymbol{E}$ and $\boldsymbol{H}$. We recall that these results only apply to the cavity problem.

For the vector components, the electric and magnetic Maxwell operators $\mathtt{A}_E$, $\mathtt{A}_H$ are defined as follows, cf. Proposition 7.6.1. Their domain is $D(\mathtt{A}_E) = \tilde{\mathbf{X}}_N(\omega;\varepsilon)$, $D(\mathtt{A}_H) = \tilde{\mathbf{X}}_T(\omega;\mu)$, where

$$\tilde{\mathbf{X}}_N(\omega;\varepsilon) := \left\{\mathbf{u} \in \mathbf{X}_N(\omega;\varepsilon) : \mu^{-1}\operatorname{curl}\boldsymbol{u} \in X_T(\omega) \text{ and } \operatorname{div}\varepsilon\boldsymbol{u} \in F^0(\omega)\right\},$$
$$\tilde{\mathbf{X}}_T(\omega;\mu) := \left\{\mathbf{u} \in \mathbf{X}_T(\omega;\mu) : \varepsilon^{-1}\operatorname{curl}\boldsymbol{u} \in X_N(\omega) \text{ and } \operatorname{div}\mu\boldsymbol{u} \in F^0_m(\omega)\right\},$$

and we have set $F^0_m(\omega) = H^1_{zmv}(\omega)$ in the plane model, $F^0_m(\omega) = H^1_{1,zmv}(\omega)$ in the fully axisymmetric model; these spaces are equipped with their graph norm. The values of the operators are, respectively,

$$\mathtt{A}_E\mathbf{u} = \mathbf{curl}\,\mu^{-1}\,\mathrm{curl}\,\mathbf{u} - \varepsilon\,\mathbf{grad}\,\mathrm{div}\,\varepsilon\mathbf{u},$$
$$\mathtt{A}_H\mathbf{u} = \mathbf{curl}\,\varepsilon^{-1}\,\mathrm{curl}\,\mathbf{u} - \mu\,\mathbf{grad}\,\mathrm{div}\,\mu\mathbf{u}.$$

Let us set $\tilde{Q}_N(\omega) = H_0^1(\omega)$ and $\tilde{Q}_T(\omega) = H_{zmv}^1(\omega)$ in the plane model, and $\tilde{Q}_N(\omega) = H_{1,\diamond}^1(\omega)$ and $\tilde{Q}_T(\omega) = H_{1,zmv}^1(\omega)$ in the fully axisymmetric model. Then, the counterparts of Propositions 7.6.2 and 7.6.3 are as follows.

Proposition 9.4.11 *In order to have* $\mathbf{E} \in W^{2,p}(0,T;\tilde{\mathbf{X}}_N(\omega;\varepsilon)) \cap W^{4,p}(0,T;\mathbf{L}(\omega))$ *and* $P_E \in W^{2,p}(0,T;\tilde{Q}_N(\omega))$ *if applicable, it is sufficient to assume:*

- *in the non-mixed framework: either*

$$\mathbf{J} \in W^{4,1}(0,T;\mathbf{L}(\omega)), \quad \varrho \in W^{3,1}(0,T;F^0(\omega)),$$

or

$$\mathbf{J} \in W^{3,p}(0,T;\mathbf{X}_N(\omega;\varepsilon)), \quad \varepsilon\,\mathbf{grad}\,\varrho \in W^{2,p}(0,T;\mathbf{X}_N(\omega;\varepsilon)), \ (^{13})$$

together with the higher-order initial data $(\mathbf{E}_2,\mathbf{E}_3) \in \tilde{\mathbf{X}}_N(\omega;\varepsilon) \times \mathbf{X}_N(\omega;\varepsilon)$, *where*

$$\varepsilon\mathbf{E}_2 = -\mathbf{J}'(0) - \mathbf{curl}\,\mu^{-1}\,\mathrm{curl}\,\mathbf{E}_0 + \varepsilon\,\mathbf{grad}(\mathrm{div}\,\varepsilon\mathbf{E}_0 - \varrho(0)),$$
$$\varepsilon\mathbf{E}_3 = -\mathbf{J}''(0) - \mathbf{curl}\,\mu^{-1}\,\mathrm{curl}\,\mathbf{E}_1 + \varepsilon\,\mathbf{grad}(\mathrm{div}\,\varepsilon\mathbf{E}_1 - \varrho'(0)).$$

- *in the mixed framework: the same conditions on* $\mathbf{J}$ *and* ϱ *as above, plus* $\varrho \in W^{4,p}(0,T;F^{-2}(\omega))$, *together with* $(\mathbf{E}_{2T},\mathbf{E}_{3T}) \in \tilde{\mathbf{X}}_N(\omega;\varepsilon) \times \mathbf{X}_N(\omega;\varepsilon)$, *i.e.,*

$$\mathbf{E}_{2T} = -\varepsilon^{-1}(\mathbf{curl}\,\mu^{-1}\,\mathrm{curl}\,\mathbf{E}_0 + \mathbf{J}_T'(0)) \in \mathbf{C}_0(\omega),$$
$$\textit{with} \quad \mu^{-1}\,\mathbf{curl}\,\mathbf{E}_{2T} \in \mathbf{C}(\omega),$$
$$\mathbf{E}_{3T} = -\varepsilon^{-1}(\mathbf{curl}\,\mu^{-1}\,\mathrm{curl}\,\mathbf{E}_1 + \mathbf{J}_T''(0)) \in \mathbf{C}_0(\omega).$$

Proposition 9.4.12 *In order to have* $\mathbf{H} \in W^{2,p}(0,T;\tilde{\mathbf{X}}_T(\omega;\mu)) \cap W^{4,p}(0,T;\mathbf{L}(\omega))$ *and* $P_H \in W^{2,p}(0,T;\tilde{Q}_T(\omega))$ *if applicable, it is sufficient to assume:*

- *in the non-mixed framework:* $\varepsilon^{-1}J \in W^{3,p}(0,T;X_N(\omega))$, *together with the higher-order initial data* $(\mathbf{H}_2,\mathbf{H}_3) \in \tilde{\mathbf{X}}_T(\omega;\mu) \times \mathbf{X}_T(\omega;\mu)$, *where:*

$$\mu\mathbf{H}_2 = \mathbf{curl}\,\varepsilon^{-1}J(0) - \mathbf{curl}\,\varepsilon^{-1}\,\mathrm{curl}\,\mathbf{H}_0 + \mu\,\mathbf{grad}\,\mathrm{div}\,\mu\mathbf{H}_0,$$
$$\mu\mathbf{H}_3 = \mathbf{curl}\,\varepsilon^{-1}J'(0) - \mathbf{curl}\,\varepsilon^{-1}\,\mathrm{curl}\,\mathbf{H}_1 + \mu\,\mathbf{grad}\,\mathrm{div}\,\mu\mathbf{H}_1.$$

[13] If $\varepsilon \in W^{1,\infty}(\omega)$, a sufficient condition to ensure this is $\varrho \in W^{2,p}(0,T;\Phi_N(\omega;\varepsilon))$, where the space $\Phi_N(\omega;\varepsilon)$ is defined in a manner analogous to (7.53), viz.:

$$\Phi_N(\omega;\varepsilon) = \left\{\varphi \in H_0^1(\omega) : \mathrm{div}(\varepsilon\,\mathbf{grad}\,\varphi) \in L^2(\omega)\right\} \quad \text{(plane)},$$
$$\Phi_N(\omega;\varepsilon) = \left\{\varphi \in H_{1,\diamond}^1(\omega) : \underline{\mathrm{div}}(\varepsilon\,\underline{\mathbf{grad}}\,\varphi) \in L_1^2(\omega)\right\} \quad \text{(fully axisymmetric)}.$$

In both cases, the condition on ϱ implies $\varrho \in W^{2,p}(0,T;F^0(\omega))$, which is needed for the mixed problem.

- *in the mixed framework:* $\varepsilon^{-1}J \in W^{3,p}(0,T;X_N(\omega))$ *again, together with* $(\mathbf{H}_2,\mathbf{H}_3) \in \tilde{\mathbf{K}}_T(\omega;\mu) \times \mathbf{K}_T(\omega;\mu)$.

  As in 3D, we have denoted $\tilde{\mathbf{K}}_T(\omega;\mu) := \tilde{\mathbf{X}}_T(\omega;\mu) \cap \mathbf{K}_T(\omega;\mu)$. *Recall that* $\mathbf{H}(t) \in \mathbf{K}_T(\omega;\mu)$ *at any time in this framework, and that the Lagrange multiplier* P_H *is zero.*

As for as the scalar components, the operators A_E, A_H are defined by their domain (equipped with its graph norm)

$$D(A_E) = \tilde{X}_N(\omega) := \left\{u \in X_N(\omega) : \mu^{-1}\,\mathbf{curl}\,u \in \mathbf{C}(\omega)\right\},$$
$$D(A_H) = \tilde{X}_T(\omega) := \left\{u \in X_T(\omega) : \varepsilon^{-1}\,\mathbf{curl}\,u \in \mathbf{C}_0(\omega)\right\},$$

and their values

$$A_E u = \operatorname{curl}\mu^{-1}\,\mathbf{curl}\,u, \quad A_H u = \operatorname{curl}\varepsilon^{-1}\,\mathbf{curl}\,u.$$

They reduce to (modified) Laplacians when ε or μ are constant. The improved regularity results take on a simpler form, as the scalar components are not involved in the divergence conditions. The improved regularity results write...

Proposition 9.4.13 *In order to have* $E \in W^{2,p}(0,T;\tilde{X}_N(\omega)) \cap W^{4,p}(0,T;L(\omega))$, *it is sufficient to assume:*

$$\text{either} \quad J \in W^{4,1}(0,T;L(\omega)), \quad \text{or} \quad J \in W^{3,p}(0,T;X_N(\omega));$$

together with the higher-order initial data $(E_2,E_3) \in \tilde{X}_N(\omega) \times X_N(\omega)$, *where*

$$\varepsilon E_2 = -J'(0) - \operatorname{curl}\mu^{-1}\,\mathbf{curl}\,E_0, \qquad \varepsilon E_3 = -J''(0) - \operatorname{curl}\mu^{-1}\,\mathbf{curl}\,E_1.$$

Proposition 9.4.14 *In order to have* $H \in W^{2,p}(0,T;\tilde{X}_T(\omega)) \cap W^{4,p}(0,T;L(\omega))$, *it is sufficient to assume:* $\varepsilon^{-1}\mathbf{J} \in W^{3,p}(0,T;\mathbf{C}_0(\omega))$, *together with the higher-order initial data* $(H_2,H_3) \in \tilde{X}_T(\omega) \times X_T(\omega)$, *where:*

$$\mu H_2 = \operatorname{curl}\varepsilon^{-1}(\mathbf{J}(0) - \mathbf{curl}\,H_0), \qquad \mu H_3 = \operatorname{curl}\varepsilon^{-1}(\mathbf{J}'(0) - \mathbf{curl}\,H_1).$$

10

Analyses of coupled models

In this chapter, we analyse the coupled models introduced in §1.3, namely the Vlasov–Poisson, Vlasov–Maxwell and magnetohydrodynamics (MHD) systems. They are basic models of charged particle, plasma and conducting fluid physics. We present the useful mathematical tools, and a variety of existence and uniqueness results for several types of solution.

10.1 The Vlasov–Maxwell and Vlasov–Poisson systems

In this section, we return to the kinetic models introduced in §1.3.1. We review the various types of solution and the known well-posedness results, first, (§10.1.2) for a linearised problem, and next, (§§10.1.3–10.1.4) for the original, non-linear models.

10.1.1 The models

We consider a system consisting of charged particles interacting through the self-consistent electromagnetic fields that they generate. They may follow either the non-relativistic or the relativistic laws of motion. To simplify the discussion, we shall assume that there is only one species of particles, and we set the constants $m,\ q,\ \varepsilon_0,\ c$ to one. If the particles are actually negatively charged, the model remains coherent by changing the sign of the electromagnetic unknowns $\boldsymbol{E},\ \boldsymbol{B},\ V$. Many-species models do not pose greater difficulties, nor do models with a so-called *neutralising background*, whose density and flux $(\rho_{\mathrm{b}}, \boldsymbol{j}_{\mathrm{b}})$ are given, provided they satisfy a continuity equation $\partial_t \rho_{\mathrm{b}} + \operatorname{div} \boldsymbol{j}_{\mathrm{b}} = 0$. To cover both relativistic and non-relativistic models, we write the Vlasov equation as

$$\frac{\partial f}{\partial t} + \boldsymbol{v}(\boldsymbol{\xi}) \cdot \nabla_{\boldsymbol{x}} f + (\boldsymbol{E} + \boldsymbol{v}(\boldsymbol{\xi}) \times \boldsymbol{B}) \cdot \nabla_{\boldsymbol{\xi}} f = 0\,; \tag{10.1}$$

$$\boldsymbol{v}(\boldsymbol{\xi}) = \frac{\boldsymbol{\xi}}{\sqrt{1+|\boldsymbol{\xi}|^2}} \quad \text{(relativistic case)}, \quad \text{respectively}$$

$$\boldsymbol{v}(\boldsymbol{\xi}) = \boldsymbol{\xi} \quad \text{(non-relativistic case)}.$$

The variable $\boldsymbol{\xi}$ plays the role of a momentum ($\boldsymbol{p}$) or velocity ($\boldsymbol{v}$). The electromagnetic fields $\boldsymbol{E}$, $\boldsymbol{B}$ are governed by Maxwell's equations in vacuum, or by approximate models. The charge and current densities are

$$\varrho(t,\boldsymbol{x}) = \int_{\mathbb{R}^3_\xi} f(t,\boldsymbol{x},\boldsymbol{\xi})\, d\boldsymbol{\xi}, \tag{10.2}$$

$$\boldsymbol{J}(t,\boldsymbol{x}) = \int_{\mathbb{R}^3_\xi} f(t,\boldsymbol{x},\boldsymbol{\xi})\, \boldsymbol{v}(\boldsymbol{\xi})\, d\boldsymbol{\xi}. \tag{10.3}$$

These satisfy the differential charge conservation equation $\partial_t \varrho + \operatorname{div} \boldsymbol{J} = 0$.

The Vlasov equation (10.1) is a *transport equation*, i.e., a first-order hyperbolic equation. It must be supplied with initial conditions

$$f(0,\boldsymbol{x},\boldsymbol{\xi}) = f_0(\boldsymbol{x},\boldsymbol{\xi}), \tag{10.4}$$

and, unless the problem is set in all space, boundary conditions. If $\boldsymbol{x}$ belongs to some open set $\Omega \subset \mathbb{R}^3_x$, the Vlasov equation is set on $T\Omega := \Omega \times \mathbb{R}^3_\xi$. Denoting (as in the previous chapters) by $\boldsymbol{n}(\boldsymbol{x})$ the outgoing unit normal vector at $\boldsymbol{x} \in \Gamma := \partial\Omega$, the phase-space boundary $\Gamma \times \mathbb{R}^3_\xi$ is divided into its *incoming*, *outgoing*, *grazing*, and non-smooth parts:

$$\Sigma^- := \{(\boldsymbol{x},\boldsymbol{\xi}) \in \Gamma \times \mathbb{R}^3 : \boldsymbol{n}(\boldsymbol{x}) \cdot \boldsymbol{\xi} < 0\}, \quad \Sigma^+ := \{(\boldsymbol{x},\boldsymbol{\xi}) : \boldsymbol{n}(\boldsymbol{x}) \cdot \boldsymbol{\xi} > 0\},$$
$$\Sigma^\circ := \{(\boldsymbol{x},\boldsymbol{\xi}) : \boldsymbol{n}(\boldsymbol{x}) \cdot \boldsymbol{\xi} = 0\}, \quad \Sigma^{NS} := \{(\boldsymbol{x},\boldsymbol{\xi}) : \boldsymbol{n}(\boldsymbol{x}) \text{ does not exist}\}.$$

If Γ is Lipschitz, both the non-smooth and the grazing boundaries are negligible w.r.t. the standard boundary measure. The boundary conditions for f are imposed on the incoming boundary only. The commonest ones are:

- the *inflow* (or *incoming flux*) condition, corresponding to a non-homogeneous Dirichlet condition:

$$f(t,\boldsymbol{x},\boldsymbol{\xi}) = f_{\text{in}}(t,\boldsymbol{x},\boldsymbol{\xi}) \quad \text{on } \Sigma^-\,; \tag{10.5}$$

- the *specular reflection* condition, which can be thought of as an equivalent of the homogeneous Neumann condition:

$$f(t,\boldsymbol{x},\boldsymbol{\xi}) = f(t,\boldsymbol{x},\boldsymbol{\xi}') \quad \text{on } \Sigma^-, \text{ where } \quad \boldsymbol{\xi}' = \boldsymbol{\xi} - 2\,(\boldsymbol{n}(\boldsymbol{x}) \cdot \boldsymbol{\xi})\,\boldsymbol{n}(\boldsymbol{x})\,; \tag{10.6}$$

  notice that $\boldsymbol{\xi}'$ is outgoing when $\boldsymbol{\xi}$ is incoming. It can be generalized as a *diffuse reflection* condition, where the incoming fluxes appear as weighted averages of the outgoing ones:

$$f(t,\boldsymbol{x},\boldsymbol{\xi}) = \int_{\Sigma^+(\boldsymbol{x})} k(\boldsymbol{x},\boldsymbol{\xi},\boldsymbol{\zeta})\, f(t,\boldsymbol{x},\boldsymbol{\zeta})\, d\boldsymbol{\zeta}, \quad \text{on } \Sigma^-,$$
$$\text{where} \quad \Sigma^+(\boldsymbol{x}) := \{\boldsymbol{\xi} \in \mathbb{R}^3 : \boldsymbol{n}(\boldsymbol{x}) \cdot \boldsymbol{\xi} > 0\}\,;$$

- the *emission-absorption* condition, which resembles the Fourier condition:

$$f(t,\boldsymbol{x},\boldsymbol{\xi}) = a(t,\boldsymbol{x},\boldsymbol{\xi})\, f(t,\boldsymbol{x},\boldsymbol{\xi}') + f_{\text{in}}(t,\boldsymbol{x},\boldsymbol{\xi}) \quad \text{on } \Sigma^-, \tag{10.7}$$

  with $0 \le a \le 1$ in principle — a diffuse version is also possible.

The *Vlasov–Maxwell system*, hereafter abbreviated VM, is formed by the Vlasov equation (10.1), the initial condition (10.4), and (when relevant) a boundary condition such as (10.5) or (10.7); the coupling relations (10.2)–(10.3); and Maxwell's equations in vacuum, with their initial and (when relevant) boundary conditions. For the sake of simplicity, we assume that these are the perfectly conducting ones if $\Omega \neq \mathbb{R}^3_x$. Absorbing boundary conditions can be dealt with through the tools introduced in §7.

Similarly, the (non-relativistic) *Vlasov–Poisson (VP) system* writes

$$\frac{\partial f}{\partial t} + \boldsymbol{\xi} \cdot \nabla_{\boldsymbol{x}} f - \nabla_{\boldsymbol{x}} V \cdot \nabla_{\boldsymbol{\xi}} f = 0\,;$$
$$-\Delta_{\boldsymbol{x}} V = \varrho,$$

supplemented by an initial condition for f, and boundary conditions for f and V if $\Omega \neq \mathbb{R}^n_x$.

Dimensionally reduced models (as in §9) are also used, for the ease of both analysis and simulation. In the physical space dimensions ($\boldsymbol{x} \in \mathbb{R}^3_x$), the domain Ω and the distribution function are invariant under the action of some continuous symmetry group. In the kinetic dimensions ($\boldsymbol{\xi} \in \mathbb{R}^3_\xi$), the distribution is factored: for instance, in a prismatic domain or an infinite cylinder, one may have

$$f(t,\boldsymbol{x},\boldsymbol{\xi}) = \mathfrak{f}(t,\mathbf{x}_\perp,\boldsymbol{\xi}_\perp)\, \mathcal{M}(\xi_z), \tag{10.8}$$

for some given function $\mathcal{M}$. The charge density is then independent of z. In the Vlasov–Poisson framework, the Curie principle stipulates that the electric potential V and field $\boldsymbol{E}$ are invariant by translation, and $\boldsymbol{E}$ is transversal ($E_z = 0$). Thus, one arrives at the reduced model

$$\frac{\partial \mathfrak{f}}{\partial t} + \boldsymbol{\xi}_\perp \cdot \nabla_{\mathbf{x}_\perp} \mathfrak{f} - \nabla_{\mathbf{x}_\perp} V \cdot \nabla_{\boldsymbol{\xi}_\perp} \mathfrak{f} = 0\,;$$
$$-\Delta_{\mathbf{x}_\perp} V = \varrho = \int_{\mathbb{R}^2_\xi} \mathfrak{f}(t,\mathbf{x}_\perp,\boldsymbol{\xi}_\perp)\, d\boldsymbol{\xi}_\perp.$$

The current density is also invariant by translation; it is transversal, i.e., $\boldsymbol{J}(t,\boldsymbol{x}) = \mathbf{J}_\perp(t,\mathbf{x}_\perp)$, if the first moment of $\mathcal{M}$ vanishes: $\int_{\mathbb{R}} \mathcal{M}(\xi)\, \xi\, d\xi = 0$. It

is thus possible to couple a transverse electric Maxwell system (9.45)–(9.52) with a non-relativistic Vlasov equation:

$$\frac{\partial \mathfrak{f}}{\partial t} + \boldsymbol{\xi}_\perp \cdot \nabla_{\mathbf{x}_\perp} \mathfrak{f} + (\mathbf{E}_\perp + B_z\, \boldsymbol{\xi}_\perp^\perp) \cdot \nabla_{\boldsymbol{\xi}_\perp} \mathfrak{f} = 0\,, \tag{10.9}$$

with $\boldsymbol{\xi}_\perp^\perp = \xi_y\, \boldsymbol{e}_x - \xi_x\, \boldsymbol{e}_y$. In a relativistic framework, the decoupling is hindered by the function $\boldsymbol{v}(\boldsymbol{\xi})$, which mixes the components. However, if the particles are monokinetic in z ($\xi_z \equiv 0$, or $\mathcal{M} = \delta$, the Dirac function in (10.8)), one arrives [122] at a relativistic version of (10.9). Again invoking the Curie principle, we see that the functions f deduced by (10.8) from the solution $\mathfrak{f}$ to the reduced models are solutions to the original models, provided the initial and boundary data of the latter are themselves of the form (10.8) with a suitable $\mathcal{M}$. The same principle can be applied to other symmetry groups of various dimensions.

Remark 10.1.1 *In both the physical and mathematical communities, one usually talks about an n-dimensional model (nD) when $\boldsymbol{x} \in \mathbb{R}^n_x$ and $\boldsymbol{\xi} \in \mathbb{R}^n_\xi$. Models in which the kinetic space has one more dimension than the position space — so as to allow a more complex interplay between the particle dynamics and the magnetic field — have also been studied in the literature [120, 121]. They are often called $1\frac{1}{2}D$ or $2\frac{1}{2}D$.*

10.1.2 Linear Vlasov equation

Framework

In this subsection, we review some of the mathematical tools needed to solve the *initial-boundary value problem* for a *linear transport equation*. Later on, these concepts will be applied fruitfully to the VP and VM systems, where the non-linearity only stems from the coupling with other equations. No proofs will be given; we refer the reader to [35].[1]

Let $\Omega \subset \mathbb{R}^n_x$ be a piecewise smooth domain, and introduce the phase-space-time slab $Q_T := (0,T) \times \Omega \times \mathbb{R}^d_\xi = (0,T) \times T\Omega$. Assume we are given two vector fields $\boldsymbol{b} : \mathbb{R}^d_\xi \to \mathbb{R}^n$ and $\boldsymbol{a} : \overline{Q_T} \to \mathbb{R}^d$. As before, we call Σ^- and Σ^+ the incoming and outgoing parts of phase-space boundary $\Gamma \times \mathbb{R}^d_\xi$:

$$\Sigma^\pm := \left\{ (\boldsymbol{x}, \boldsymbol{\xi}) \in \Gamma \times \mathbb{R}^d_\xi : \pm \boldsymbol{b}(\boldsymbol{\xi}) \cdot \boldsymbol{n}(\boldsymbol{x}) > 0 \right\},$$

and $B_T^\pm := (0,T) \times \Sigma^\pm$. The trace on B_T^-, respectively B_T^+ of a function u defined on Q_T is denoted u_-, respectively u_+. Furthermore, we call Π_t the slice at time t:

[1] That work is written for the case $\boldsymbol{b}(\boldsymbol{\xi}) = \boldsymbol{\xi}$ in (10.10) below, corresponding to a non-relativistic model with $n = d$; and it assumes a stronger time regularity than (A1) for the force field $\boldsymbol{a}$. None of these assumptions is essential.

$$\Pi_t = \{(t, \boldsymbol{x}, \boldsymbol{\xi}) : (\boldsymbol{x}, \boldsymbol{\xi}) \in \Omega \times \mathbb{R}^d_\xi\},$$

and write, as usual, $u(t)$ for the function $(\boldsymbol{x}, \boldsymbol{\xi}) \mapsto u(t, \boldsymbol{x}, \boldsymbol{\xi})$. We shall consider the following problem:

$$Yu := \partial_t u + \boldsymbol{b}(\boldsymbol{\xi}) \cdot \nabla_{\boldsymbol{x}} u + \boldsymbol{a}(t, \boldsymbol{x}, \boldsymbol{\xi}) \cdot \nabla_{\boldsymbol{\xi}} u = 0 \quad \text{in } Q_T\,; \tag{10.10}$$

$$u(0) = u_0 \quad \text{in } T\Omega\,; \tag{10.11}$$

$$u_- = Ku_+ + u_{\text{in}} \quad \text{on } B_T^-\,. \tag{10.12}$$

Following a classical point of view [196], we may regard the differential operator Y as a vector field on $\overline{Q_T}$. Notice that, as its time component is 1, this field vanishes nowhere. The meaning of the initial and boundary conditions (10.11), (10.12) will be specified later. The operator K maps some function space on B_T^+ to another on B_T^-; it may describe various boundary conditions: inflow ($K = 0$), specular or diffuse reflection ($\|K\| = 1$ in a suitable space), emission-absorption ($\|K\| < 1$), etc.

In the whole subsection, we shall assume that the field $\boldsymbol{a}$ is $\boldsymbol{\xi}$-divergence-free, i.e.,

$$\sum_{j=1}^d \frac{\partial}{\partial \xi_j} a_j(t, \boldsymbol{x}, \boldsymbol{\xi}) = 0 \quad \text{in the sense of } \mathcal{D}'(Q_T). \tag{10.13}$$

This condition is obviously satisfied in the Vlasov–Poisson case ($\boldsymbol{a} = \boldsymbol{E}$ independent of $\boldsymbol{\xi}$), and one checks that it also holds for the Vlasov–Maxwell system. It naturally leads to recast the so-called *advective form* of the transport equation (10.10) into the *conservative form*:

$$\partial_t u + \operatorname{div}_{x,\xi}(u\,\boldsymbol{A}) = 0 \quad \text{in } Q_T\,, \tag{10.14}$$

where $\boldsymbol{A}$ is the $(n+d)$-dimensional vector field $(\boldsymbol{b}, \boldsymbol{a})$ on $T\Omega$. Thus, the operator Y is formally skew-adjoint. Furthermore, an integral conservation property holds, which justifies the "conservative" terminology. Introducing the measure on $(0, T) \times \Gamma \times \mathbb{R}^d_\xi$:

$$d\nu := |\boldsymbol{b} \cdot \boldsymbol{n}|\, d\Gamma(\boldsymbol{x}) d\boldsymbol{\xi}\, dt, \quad \text{where: } d\Gamma = \text{surface measure on } \Gamma, \tag{10.15}$$

the integration-by-parts formula (2.18) applied to (10.14) formally gives us

$$\int_{T\Omega} u(0)\, d\boldsymbol{x} d\boldsymbol{\xi} + \int_{B_T^-} u_-\, d\nu = \int_{T\Omega} u(T)\, d\boldsymbol{x} d\boldsymbol{\xi} + \int_{B_T^+} u_+\, d\nu\,. \tag{10.16}$$

From the above formula, it appears coherent to separate the boundary ∂Q_T into its entry and exit parts: $D_T^- := B_T^- \cup \Pi_0$, $D_T^+ := B_T^+ \cup \Pi_T$. (The grazing and non-smooth parts are ignored; anyway, they do not play any role in the formulations.) The boundary measure being defined as

$$d\nu = d\boldsymbol{x} d\boldsymbol{\xi} \quad \text{on } \Pi_0 \text{ and } \Pi_T, \quad d\nu \text{ given by (10.15) on } B_T^\pm\,, \tag{10.17}$$

and the traces as

$$u^- := (u(0), u_-), \quad u^+ := (u(T), u_+),$$

Eq. (10.16) takes the compact form $\int_{D_T^-} u^-\, d\nu = \int_{D_T^+} u^+\, d\nu$.

We now present the various types of solution that have been defined for the system (10.10)–(10.12). In a first approach, we assume that inflow boundary conditions are applied when relevant ($\Omega \neq \mathbb{R}^n_x$), i.e., the operator $K = 0$ in (10.12). In this case, the initial and boundary conditions (10.11), (10.12) can be summarised as the *entry condition*

$$u^- = g \text{ on } D_T^-, \quad \text{where:} \quad g := (u_0, u_{\text{in}}). \tag{10.18}$$

The modifications induced by other boundary conditions will be sketched at the end of the subsection.

Weak and renormalised solutions

Classical solutions (i.e., C^1 in $(t, \boldsymbol{x}, \boldsymbol{\xi})$) are not necessarily the most appropriate framework for solving the system (10.10)–(10.12). But suppose, for the moment, that there exists a C^1 solution u. Multiplying the conservative form (10.14) by a test function φ chosen within a space of C^1 functions with compact support

$$\Phi_- := \left\{\varphi \in C^1_c(\overline{Q_T}) : \operatorname{supp}\varphi \cap D_T^+ = \emptyset\right\}, \tag{10.19}$$

and using the integration-by-parts formula (2.18), we arrive at:

$$\int_{Q_T} u\,(Y\varphi)\,d\mu + \int_{T\Omega} u_0\,\varphi(0)\,d\boldsymbol{x}d\boldsymbol{\xi} + \int_{B_T^-} u_{\text{in}}\,\varphi\,d\nu = 0. \tag{10.20}$$

We have written $d\mu = d\boldsymbol{x}d\boldsymbol{\xi}\,dt$ for short. This motivates the definition of weak solutions.

Definition 10.1.2 *Let (p, q) be two conjugate exponents: $\frac{1}{p} + \frac{1}{q} = 1$, and let:*

$$\begin{aligned} &g \in L^p_{loc}(D_T^-), \quad \text{i.e.:} \quad u_0 \in L^p_{loc}(T\Omega), \quad u_{\text{in}} \in L^p_{loc}(B_T^-, d\nu); \\ &\boldsymbol{b} \in L^q_{loc}(\mathbb{R}^d_\xi)^n; \quad \boldsymbol{a} \in L^q_{loc}(Q_T)^d. \end{aligned}$$

A weak L^p_{loc} solution *to* (10.10), (10.18) *is a function $u \in L^p_{loc}(Q_T)$ such that* (10.20) *holds for all $\varphi \in \Phi_-$.*

Remark 10.1.3 *A few comments on this definition:*

- *The assumption $\boldsymbol{b} \in L^q_{loc}(\mathbb{R}^d_\xi)^n$ implies that $\boldsymbol{b} \cdot \boldsymbol{n} \in L^q_{loc}(\Sigma^-)$.*
- *To check the entry condition* (10.18)*, one has to develop an "anisotropic" trace theory: there is a trace theorem that states that functions $w \in L^p_{loc}(Q_T)$ such that $Yw \in L^p_{loc}(Q_T)$ have well-defined traces $w^\pm \in L^p_{loc}(D_T^\pm, d\nu)$.*[2]

[2] The trace theory from [35] can be reconciled with the one presented here. Following [130, Lemma 2.1], the space of test functions used in [35] and $C^1_c(\overline{Q_T})$ admit a common subspace that is dense in $W^{1,p}(Q_T)$ for $1 \leq p < \infty$. This shows the equality of traces in the sense of $W^{-1/q,q}(\partial Q_T)$, where $\frac{1}{p} + \frac{1}{q} = 1$.

- *When* $g \in L^p(D_T^-, d\nu)$ *and* $u \in L^p(Q_T)$*, we shall speak of a* weak L^p solution.

An interesting generalisation[3] is the following [103]. Formally, if u is a solution to (10.10), then so is any function $\beta(u)$. However, $\beta(u)$ can be locally, even globally, integrable when u is not. For instance, if the function β satisfies the conditions

$$\beta \in C^0(\mathbb{R}) \cap L^\infty(\mathbb{R}), \quad \beta \equiv 0 \text{ in a neighbourhood of } 0, \tag{10.21}$$

then it suffices to have

$$w \in L^0(\mathcal{O}, d\mu) := \{w \ \mu\text{-measurable on } \mathcal{O} : \forall \lambda > 0, \ \mu\left([|w| > \lambda]\right) < +\infty\}$$

in order to ensure $\beta(w) \in L^1(\mathcal{O}) \cap L^\infty(\mathcal{O})$. This leads to the definition of a new type of solution.

Definition 10.1.4 *Let*

$$\begin{aligned} &g \in L^0(D_T^-, d\nu), \quad \text{i.e.:} \quad u_0 \in L^0(T\Omega), \quad u_{\text{in}} \in L^0(B_T^-, d\nu); \\ &\boldsymbol{b} \in L^1_{loc}(\mathbb{R}^d_\xi)^n; \quad \boldsymbol{a} \in L^1_{loc}(Q_T)^d. \end{aligned}$$

A renormalised solution *to* (10.10), (10.18) *is a function* $u \in L^0(Q_T)$ *such that* $\beta(u)$ *is a weak* L^1 *solution, with entry data* $\beta(g)$*, for all functions* $\beta(\cdot)$ *satisfying* (10.21).

Characteristic (mild) solutions

A fundamental object in the study of Equation (10.10) is the so-called *characteristic system* of ordinary differential equations

$$\boldsymbol{X}'(s) = \boldsymbol{b}(\boldsymbol{\Xi}(s)), \quad \boldsymbol{\Xi}'(s) = \boldsymbol{a}(s, \boldsymbol{X}(s), \boldsymbol{\Xi}(s)). \tag{10.22}$$

The particular solution (assuming it is unique and exists locally, i.e., on an open *existence interval* $I \ni t$) corresponding to the initial condition

$$\boldsymbol{X}(t) = \boldsymbol{x}, \quad \boldsymbol{\Xi}(t) = \boldsymbol{\xi},$$

will be denoted $(\boldsymbol{X}(s; t, \boldsymbol{x}, \boldsymbol{\xi}), \boldsymbol{\Xi}(s; t, \boldsymbol{x}, \boldsymbol{\xi}))$. The integral curves of (10.22) are referred to as *the characteristics*, so as to distinguish them from the integral curves of the vector field Y, i.e., the set of triples $(s, \boldsymbol{X}(s), \boldsymbol{\Xi}(s))$, where $(\boldsymbol{X}(s), \boldsymbol{\Xi}(s))$ solves (10.22).

Using elementary calculus, one proves two easy but fundamental results.

[3] Especially for applications to non-linear problems, where it allows one to relax the assumptions on the data: compare Theorems 10.1.17 and 10.1.18 below.

Proposition 10.1.5 *Any (smooth enough) solution u to* (10.10) *is constant along the integral curves of Y, i.e., for any $(t, \boldsymbol{x}, \boldsymbol{\xi}) \in \overline{Q_T}$, the function $\psi(s) := u(s, \boldsymbol{X}(s; t, \boldsymbol{x}, \boldsymbol{\xi}), \boldsymbol{\Xi}(s; t, \boldsymbol{x}, \boldsymbol{\xi}))$ satisfies $\psi'(s) = 0$ for all s in the existence interval of the characteristic.*

Therefore, in order to find the value of $u(t, \boldsymbol{x}, \boldsymbol{\xi})$, one just has to follow the characteristics back until one meets the initial ($s = 0$) or boundary ($(\boldsymbol{X}, \boldsymbol{\Xi}) \in \Sigma^-$) condition.

Lemma 10.1.6 *Under the condition* (10.13)*, the Jacobian of the characteristic mapping, i.e., the $(n + d)$-dimensional determinant*

$$J(s; t, \boldsymbol{x}, \boldsymbol{\xi}) = \det \frac{\partial(\boldsymbol{X}(s; t, \boldsymbol{x}, \boldsymbol{\xi}), \boldsymbol{\Xi}(s; t, \boldsymbol{x}, \boldsymbol{\xi}))}{\partial(\boldsymbol{x}, \boldsymbol{\xi})}$$

is equal to 1 *for all (s, t) and $(\boldsymbol{x}, \boldsymbol{\xi})$, as long as the characteristics exist.*

To keep things simple, we shall make two general assumptions.

(A1) The vector field $\boldsymbol{b}$ is locally Lipschitz-continuous:[4] $\boldsymbol{b} \in C^{0,1}_{loc}(\mathbb{R}^d_\xi)^n$. The field $\boldsymbol{a}$ belongs to $L^1_{loc}(0, T; C^{0,1}_{loc}(T\Omega)^d)$, and satisfies (10.13).

(A2) No characteristic reaches infinity in finite time, i.e., any integral curve remains in a bounded region of $\overline{Q_T}$.

Assumption (A1) implies the local existence and uniqueness of characteristics, by an easy extension of the classical Cauchy–Lipschitz theorem [133, Theorem 5.3, Chapter I]; they belong to $W^{1,1}_{loc}(I; T\Omega) \subset C^0(I; T\Omega)$ on their existence interval I. The assumption also ensures that Yw is meaningful for any $w \in L^p_{loc}(Q_T), 1 \le p < \infty$.
A sufficient condition for (A2) is

$$|\boldsymbol{b}(\boldsymbol{\xi})| \le C_b\,(1 + |\boldsymbol{\xi}|), \quad |\boldsymbol{a}(t, \boldsymbol{x}, \boldsymbol{\xi})| \le C_a\,(1 + |\boldsymbol{x}| + |\boldsymbol{\xi}|) \tag{10.23}$$

for some C_a, C_b: apply Gronwall's lemma 7.2.1 to $e(s) = 1 + |\boldsymbol{X}(s)|^2 + |\boldsymbol{\Xi}(s)|^2$. As a consequence of (A2), integral curves can be extended (toward the past and the future) as long as they remain in Q_T, i.e., characteristics can be extended as long as they remain in $T\Omega$.

Under (A1) and (A2), one can associate each characteristic (or integral curve) with its entry and exit times

$$s_-(t, \boldsymbol{x}, \boldsymbol{\xi}) := \inf\{s \in (0, T) : (s, \boldsymbol{X}(s; t, \boldsymbol{x}, \boldsymbol{\xi}), \boldsymbol{\Xi}(s; t, \boldsymbol{x}, \boldsymbol{\xi})) \in Q_T\},$$
$$s_+(t, \boldsymbol{x}, \boldsymbol{\xi}) := \sup\{s \in (0, T) : (s, \boldsymbol{X}(s; t, \boldsymbol{x}, \boldsymbol{\xi}), \boldsymbol{\Xi}(s; t, \boldsymbol{x}, \boldsymbol{\xi})) \in Q_T\}.$$

By compactness, the integral curves can be extended continuously and unambiguously to $s = s_-$ and s_+. This leads to the (new) definition of the entry and exit points and sets

[4] As usual, this means $\boldsymbol{b} \in C^{0,1}(K)^n$ for any compact set $K \subset \mathbb{R}^d_\xi$ (see Definition 2.1.22 and its footnote for the space $C^{0,1}$ of Lipschitz-continuous functions and its topology).

$$(\boldsymbol{X}_\pm, \boldsymbol{\Xi}_\pm)(t, \boldsymbol{x}, \boldsymbol{\xi}) := (\boldsymbol{X}, \boldsymbol{\Xi})(s_\pm(t, \boldsymbol{x}, \boldsymbol{\xi}); t, \boldsymbol{x}, \boldsymbol{\xi}),$$
$$D_T^\pm := \{(s_\pm, \boldsymbol{X}_\pm, \boldsymbol{\Xi}_\pm)(t, \boldsymbol{x}, \boldsymbol{\xi}) : (t, \boldsymbol{x}, \boldsymbol{\xi}) \in Q_T\}.$$

As Y vanishes nowhere, the extremities of the integral curves necessarily lie on ∂Q_T, and each point of ∂Q_T is the entry (respectively exit) point of, at most, one integral curve. However, neither $D_T^+ \cap D_T^-$ nor $\partial Q_T \setminus (D_T^+ \cup D_T^-)$ are necessarily empty; but one proves that they are negligible for the measure $d\nu$ defined in (10.17). Up to negligible sets, one has $D_T^+ = B_T^+ \cup \Pi_T$ and $D_T^- = B_T^- \cup \Pi_0$, as before. Therefore, we deduce from Proposition 10.1.5 that a classical solution u to (10.10) verifies

$$\begin{aligned} u(t, \boldsymbol{x}, \boldsymbol{\xi}) &= g(s_-(t, \boldsymbol{x}, \boldsymbol{\xi}), \boldsymbol{X}_-(t, \boldsymbol{x}, \boldsymbol{\xi}), \boldsymbol{\Xi}_-(t, \boldsymbol{x}, \boldsymbol{\xi})), \quad \text{i.e.,} \\ u(t, \boldsymbol{x}, \boldsymbol{\xi}) &= u_0(\boldsymbol{X}_-(t, \boldsymbol{x}, \boldsymbol{\xi}), \boldsymbol{\Xi}_-(t, \boldsymbol{x}, \boldsymbol{\xi})) \quad \text{if } s_-(t, \boldsymbol{x}, \boldsymbol{\xi}) = 0, \\ u(t, \boldsymbol{x}, \boldsymbol{\xi}) &= u_{\text{in}}(s_-(t, \boldsymbol{x}, \boldsymbol{\xi}), \boldsymbol{X}_-(t, \boldsymbol{x}, \boldsymbol{\xi}), \boldsymbol{\Xi}_-(t, \boldsymbol{x}, \boldsymbol{\xi})) \\ &\qquad \text{if } s_- > 0, \text{ and thus } (\boldsymbol{X}_-, \boldsymbol{\Xi}_-) \in \Sigma^-. \end{aligned} \tag{10.24}$$

Following the usual pattern, one takes these formulas as the definition of a new type of solution, which is "weaker" than classical solutions, but nevertheless "stronger" than the weak solutions of Definition 10.1.2.

Definition 10.1.7 *Let* $(\boldsymbol{b}, \boldsymbol{a})$ *be two fields satisfying (A1) and (A2), and let* $g \in L^p(D_T^-, d\nu)$*. The* characteristic *or* mild L^p solution *to* (10.10), (10.18) *is the function* u *defined on* Q_T *by* (10.24).

By definition, a mild solution is unique. Using Lemma 10.1.6, one checks that it satisfies the weak formulation (10.20): it is a weak solution. The same lemma allows one to prove that $u \in L^p(Q_T)$. Actually, for any w within the space

$$E^p(Q_T) := \left\{ w \in L^p(Q_T) : Yw \in L^p(Q_T) \text{ and } w^\pm \in L^p(D_T^\pm, d\nu) \right\},$$

it holds that

$$\int_{D_T^+} \left|w^+\right|^p \, d\nu = \int_{D_T^-} \left|w^-\right|^p \, d\nu \; + \; p \int_{Q_T} \operatorname{sgn} w \, |w|^{p-1} \, Yw \, d\mu. \tag{10.25}$$

Interestingly [35], under the assumptions (A1), (A2), and $g \in L^p(D_T^-, d\nu)$, any weak L^p solution to (10.10), (10.18) is also a mild solution. Thus, weak solutions enjoy an existence and uniqueness property in this case, and one can define a solution operator

$$\mathcal{T} : L^p(D_T^-, d\nu) \to E^p(Q_T), \quad g \mapsto u.$$

Existence under weaker assumptions can be obtained through a limiting process or a fixed point theorem; uniqueness depends on the method used. For example, renormalised solutions have an existence and uniqueness theorem under the following assumptions.

(R1) The vector field $\boldsymbol{b}$ belongs to $W^{1,1}_{loc}(\mathbb{R}^d_\xi)^n$, and $\boldsymbol{\xi} \mapsto \boldsymbol{b}(\boldsymbol{\xi})/(1+|\boldsymbol{\xi}|)$ belongs to $L^1(\mathbb{R}^d_\xi)^n + L^\infty(\mathbb{R}^d_\xi)^n$.

The field $\boldsymbol{a}$ belongs to $L^1(0,T;W^{1,1}_{loc}(T\Omega)^d)$, and satisfies (10.13). The field

$$(t,\boldsymbol{x},\boldsymbol{\xi}) \mapsto \frac{\boldsymbol{a}(t,\boldsymbol{x},\boldsymbol{\xi})}{1+|\boldsymbol{x}|+|\boldsymbol{\xi}|} \text{ belongs to } L^1\left(0,T;L^1(T\Omega)^d + L^\infty(T\Omega)^d\right),$$

where the Banach space

$$\begin{aligned} &L^1(\mathcal{O}) + L^\infty(\mathcal{O}) := \\ &\qquad \{w \text{ measurable on } \mathcal{O} : \exists u \in L^1(\mathcal{O}),\ v \in L^\infty(\mathcal{O}) \text{ s.t. } w = u+v\}, \\ &\|w\|_{L^1(\mathcal{O})+L^\infty(\mathcal{O})} := \inf\{\|u\|_{L^1(\mathcal{O})} + \|v\|_{L^\infty(\mathcal{O})} : u+v=w\}. \end{aligned}$$

In turn, this allows one to define so-called *weak characteristics* [103].

Other boundary conditions

Before leaving this subsection, we return to the case when the operator K is different from zero in the boundary condition (10.11). The entry condition (10.18) is thus replaced with the *entry-exit condition*

$$u^- = \mathcal{K}u^+ + g, \quad \text{where:} \quad \mathcal{K}(u(T),u_+) := (0, Ku_+). \tag{10.26}$$

We suppose that K is a bounded operator from $L^p(B^+_T, d\nu)$ to $L^p(B^-_T, d\nu)$ for some p, and that it is local in time, i.e., $K(k(t)\,w) = k(t)\,Kw$ for all $w \in L^p(B^+_T, d\nu)$ and $k(\cdot)$ smooth enough. The operator $\mathcal{K}$ enjoys the same properties; and $\|\mathcal{K}\| = \|K\|$ as an operator from $L^p(D^+_T, d\nu)$ to $L^p(D^-_T, d\nu)$.

In a first step, let us assume $\|K\| < 1$: this is an emission-absorption-type condition. We look for the solution to the problem (10.10), (10.26) by identifying it with the solution to an inflow problem

$$Yu = 0 \text{ in } Q_T, \quad u^- = g^* \quad \text{on } D^-_T,$$

i.e., as $u = \mathcal{T}g^*$. This is possible if, and only if, $g^* = \mathcal{K}u^+ + g$, or equivalently,

$$(I-\mathcal{L})g^* = g, \quad \text{where:} \quad \mathcal{L}g^* := \mathcal{K}\left(\mathcal{T}g^*\right)^+ . \tag{10.27}$$

By (10.25), the linear mapping $g \mapsto (\mathcal{T}g)^+$ is of norm 1 as an operator from $L^p(D^-_T, d\nu)$ to $L^p(D^+_T, d\nu)$. Therefore, $\|\mathcal{L}\| = \|K\| < 1$, and Eq. (10.27) admits a unique solution [63, Exercise 6.14 in the English edition]. In other words, the problem (10.10)–(10.12) admits a unique solution $u \in E^p(Q_T)$ if $g \in L^p(D^-_T, d\nu)$, i.e., $u_0 \in L^p(T\Omega)$ and $u_{\text{in}} \in L^p(B^-_T, d\nu)$.

The case $\|K\| = 1$, corresponding to a specular or diffuse reflection, is more difficult. One has to assume, in addition, that $u_{\text{in}} = 0$ (which is physically relevant), and that $Kw \geq 0$ whenever $w \geq 0$. By an approximation procedure, one shows the existence and uniqueness of a solution $u \in L^p(Q_T)$ for any $u_0 \in L^p(T\Omega)$.

As far as regularity is concerned, one introduces the following definitions, which generalise the inflow case.

Definition 10.1.8 *Under the assumptions of Definition 10.1.2, a* weak L^p_{loc} solution *to* (10.10), (10.26) *is a couple* $(u, u_+) \in L^p_{loc}(Q_T) \times L^p_{loc}(B_T^+, d\nu)$ *such that the following holds for all* $\varphi \in \Phi := C^1_c([0,T) \times \overline{T\Omega})$*:*

$$\int_{Q_T} u\,(Y\varphi)\,d\mu + \int_{T\Omega} u_0\,\varphi(0)\,d\boldsymbol{x}d\boldsymbol{\xi} - \int_{B_T^+} u_+\,\varphi_+\,d\nu + \int_{B_T^-} (Ku_+ + u_{\rm in})\,\varphi_-\,d\nu = 0. \tag{10.28}$$

Remark 10.1.9 *Of course,* u_+ *coincides with the trace of* u *on* B_T^+*. But the existence of the latter is not guaranteed until one checks* $Yu = 0$ *by taking* $\varphi \in \mathcal{D}(Q_T)$ *in* (10.28)*, cf. Remark 10.1.3. The solution is still called a weak* L^p *solution if* $g = (u_0, u_{\rm in}) \in L^p(D_T^-, d\nu)$ *and* $u \in L^p(Q_T)$*.*

Definition 10.1.10 *The* characteristic *or* mild L^p solution *to* (10.10), (10.26) *is a weak solution such that* u *coincides with the mild solution, in the sense of Definition 10.1.7, of an inflow problem with a suitable entry data* g^**, cf.* (10.27)*.*

10.1.3 Weak and renormalised solutions for Vlasov–Poisson and Vlasov–Maxwell

This subsection, as well as the next one, is chiefly taken from [59] and references therein. Again, we shall omit proofs. *Mutatis mutandis*, we keep the notations of §§10.1.1 and 10.1.2. Again, we set

$$\boldsymbol{v}(\boldsymbol{\xi}) := \frac{\boldsymbol{\xi}}{\sqrt{1+|\boldsymbol{\xi}|^2}} \quad \text{(relativistic)}, \quad \boldsymbol{v}(\boldsymbol{\xi}) := \boldsymbol{\xi} \quad \text{(non-relativistic)},$$

and $\boldsymbol{b}(\boldsymbol{\xi})$ is equal to $\boldsymbol{v}(\boldsymbol{\xi})$ if $\boldsymbol{x}$ and $\boldsymbol{\xi}$ have the same dimensionality. In the case of a "half-dimensional" model, as in Remark 10.1.1, $\boldsymbol{b}(\boldsymbol{\xi})$ is a suitable projection of $\boldsymbol{v}(\boldsymbol{\xi})$, e.g., $\boldsymbol{b}(\boldsymbol{\xi}) := \boldsymbol{v}(\boldsymbol{\xi})_\perp$ for a $2\frac{1}{2}$D model. All in all, the general Vlasov–Maxwell system writes

$$\frac{\partial f}{\partial t} + \boldsymbol{b}(\boldsymbol{\xi}) \cdot \nabla_{\boldsymbol{x}} f + (\boldsymbol{E} + \boldsymbol{v}(\boldsymbol{\xi}) \times \boldsymbol{B}) \cdot \nabla_{\boldsymbol{\xi}} f = 0 \quad \text{in } Q_T, \tag{10.29}$$

$$f_- = Kf_+ + f_{\rm in} \quad \text{on } B_T^-, \tag{10.30}$$

$$f(0) = f_0 \quad \text{in } T\Omega, \tag{10.31}$$

$$\frac{\partial \boldsymbol{E}}{\partial t} - \mathbf{curl}\,\boldsymbol{B} = -\boldsymbol{j}[f], \quad \frac{\partial \boldsymbol{B}}{\partial t} + \mathbf{curl}\,\boldsymbol{E} = 0 \quad \text{in } (0,T) \times \Omega, \tag{10.32}$$

$$\operatorname{div} \boldsymbol{E} = \rho[f], \quad \operatorname{div} \boldsymbol{B} = 0 \quad \text{in } (0,T) \times \Omega, \tag{10.33}$$

$$\boldsymbol{E} \times \boldsymbol{n} = 0, \quad \boldsymbol{B} \cdot \boldsymbol{n} = 0 \quad \text{on } (0,T) \times \Gamma, \tag{10.34}$$

$$\boldsymbol{E}(0) = \boldsymbol{E}_0, \quad \boldsymbol{B}(0) = \boldsymbol{B}_0 \quad \text{in } \Omega, \tag{10.35}$$

$$\begin{pmatrix} \rho[f] \\ \boldsymbol{j}[f] \end{pmatrix} = \int_{\mathbb{R}^d_\xi} f(t,\boldsymbol{x},\boldsymbol{\xi}) \begin{pmatrix} 1 \\ \boldsymbol{v}(\boldsymbol{\xi}) \end{pmatrix} d\boldsymbol{\xi} \quad \text{in } (0,T) \times \Omega. \tag{10.36}$$

The notations above are the usual ones for three-dimensional vectors. Lesser-dimensional systems are obtained as explained in §10.1.1. They are handled in the same manner, taking care of:

- the dimensionalities of the electromagnetic variables: $\boldsymbol{E}$ necessarily belongs to the same space $\mathbb{R}^d$ as $\boldsymbol{\xi}$, while the dimensionality d_B of the magnetic field may be different, cf. (10.9);
- the suitable reinterpretation of the curl operators in (10.32), cf. §9, and of the cross-product in (10.29), cf. (10.9) again.

The self-consistent particle density and flux $(\rho[f], \boldsymbol{j}[f])$ automatically satisfy the continuity equation $\partial_t \rho[f] + \operatorname{div} \boldsymbol{j}[f] = 0$ (integrate (10.29) in $\boldsymbol{\xi}$). Thus, Eqs. (10.32) and (10.33) are compatible, and we know from §§5 and 7 that the Gauss equation is satisfied at any time if, and only if, it holds for the initial data. The same pattern prevails for the constraints $\operatorname{div} \boldsymbol{B} = 0$ and $\boldsymbol{B} \cdot \boldsymbol{n} = 0$ on the magnetic field. So, we shall say that the initial conditions of the VM system are *compatible* if, and only if,

$$\operatorname{div} \boldsymbol{E}_0 = \rho[f_0] \quad \text{and} \quad \operatorname{div} \boldsymbol{B}_0 = 0 \text{ in } \Omega, \quad \boldsymbol{B}_0 \cdot \boldsymbol{n} = 0 \text{ on } \Gamma. \tag{10.37}$$

Definition 10.1.11 *Let the spaces of test functions be*

$$\Phi = C^1_c([0,T) \times \overline{T\Omega}), \quad \boldsymbol{\Psi}_E = C^1_c([0,T) \times \overline{\Omega})^d, \quad \boldsymbol{\Psi}_B = C^1_c([0,T) \times \Omega)^{d_B}.$$

Assume we are given compatible initial conditions $(f_0, \boldsymbol{E}_0, \boldsymbol{B}_0) \in L^p_{loc}(T\Omega) \times \boldsymbol{L}^q_{loc}(\Omega) \times \boldsymbol{L}^q_{loc}(\Omega)$*, with* $\frac{1}{p} + \frac{1}{q} = 1$*, and an incoming data* $f_{\text{in}} \in L^p_{loc}(B^-_T, d\nu)$*. A weak solution to* (10.29)–(10.36) *is a quadruple* $(f, f_+, \boldsymbol{E}, \boldsymbol{B}) \in L^p_{loc}(Q_T) \times L^p_{loc}(B^+_T) \times \boldsymbol{L}^q_{loc}((0,T) \times \Omega) \times \boldsymbol{L}^q_{loc}((0,T) \times \Omega)$ *such that, for all* $(\varphi, \boldsymbol{\psi}_E, \boldsymbol{\psi}_B) \in \Phi \times \boldsymbol{\Psi}_E \times \boldsymbol{\Psi}_B$*,*

$$\begin{aligned}
&\int_{Q_T} f \left[\frac{\partial \varphi}{\partial t} + \boldsymbol{b}(\boldsymbol{\xi}) \cdot \nabla_{\boldsymbol{x}} \varphi + (\boldsymbol{E} + \boldsymbol{v}(\boldsymbol{\xi}) \times \boldsymbol{B}) \cdot \nabla_{\boldsymbol{\xi}} \varphi \right] d\mu \\
&\quad + \int_{T\Omega} f_0 \, \varphi(0) \, d\boldsymbol{x} d\boldsymbol{\xi} - \int_{B^+_T} f_+ \, \varphi \, d\nu + \int_{B^-_T} (K f_+ + f_{\text{in}}) \, \varphi \, d\nu = 0, \qquad (10.38)
\end{aligned}$$

$$\begin{aligned}
&\int_0^T \int_\Omega \left[\boldsymbol{E} \cdot \frac{\partial \boldsymbol{\psi}_E}{\partial t} + \boldsymbol{B} \cdot \mathbf{curl}\, \boldsymbol{\psi}_E - \boldsymbol{j}[f] \cdot \boldsymbol{\psi}_E \right] d\boldsymbol{x} \, dt \\
&\quad + \int_\Omega \boldsymbol{E}_0 \cdot \boldsymbol{\psi}_E(0) \, d\boldsymbol{x} = 0, \qquad (10.39)
\end{aligned}$$

$$\int_0^T \int_\Omega \left[\boldsymbol{B} \cdot \frac{\partial \boldsymbol{\psi}_B}{\partial t} - \boldsymbol{E} \cdot \mathbf{curl}\, \boldsymbol{\psi}_B \right] d\boldsymbol{x} \, dt + \int_\Omega \boldsymbol{B}_0 \cdot \boldsymbol{\psi}_B(0) \, d\boldsymbol{x} = 0. \tag{10.40}$$

We shall also consider the n-dimensional (non-relativistic) Vlasov–Poisson system:

$$\frac{\partial f}{\partial t} + \boldsymbol{\xi} \cdot \nabla_{\boldsymbol{x}} f + \boldsymbol{E} \cdot \nabla_{\boldsymbol{\xi}} f = 0 \qquad \text{in } Q_T, \tag{10.41}$$

$$\mathbf{curl}\, \boldsymbol{E} = 0, \quad \operatorname{div} \boldsymbol{E} = \rho[f] \qquad \text{in } (0,T) \times \Omega, \tag{10.42}$$

$$\rho[f] = \int_{\mathbb{R}^n_\xi} f(t, \boldsymbol{x}, \boldsymbol{\xi})\, d\boldsymbol{\xi} \qquad \text{in } (0,T) \times \Omega, \tag{10.43}$$

plus initial and boundary conditions (see (10.30), (10.31), (10.34, left)).

Definition 10.1.12 *Let $\Psi := C^1_c([0,T) \times \Omega)$, the other notations being as in Definition 10.1.11. A weak solution to* (10.41)–(10.43)*, with the initial and boundary conditions (see* (10.30)*,* (10.31)*,* (10.34, left)*), is a triple $(f, f_+, \boldsymbol{E}) \in L^p_{loc}(Q_T) \times L^p_{loc}(B^+_T) \times \boldsymbol{L}^q_{loc}((0,T) \times \Omega)$ such that, for all $(\varphi, \boldsymbol{\psi}_E, \psi) \in \Phi \times \boldsymbol{\Psi}_E \times \Psi$,*

$$\int_{Q_T} f \left[\frac{\partial \varphi}{\partial t} + \boldsymbol{\xi} \cdot \nabla_{\boldsymbol{x}} \varphi + \boldsymbol{E} \cdot \nabla_{\boldsymbol{\xi}} \varphi \right] d\mu$$
$$+ \int_{T\Omega} f_0\, \varphi(0)\, d\boldsymbol{x} d\boldsymbol{\xi} - \int_{B^+_T} f_+\, \varphi\, d\nu + \int_{B^-_T} (K f_+ + f_{\text{in}})\, \varphi\, d\nu = 0, \tag{10.44}$$

$$\int_0^T \int_\Omega \left[\boldsymbol{E} \cdot (\mathbf{curl}\, \boldsymbol{\psi}_E + \mathbf{grad}\, \psi) + \rho[f]\, \psi \right] d\boldsymbol{x}\, dt = 0. \tag{10.45}$$

Remark 10.1.13 *In both models, the term on B^+_T is not needed for an inflow boundary condition ($K = 0$); in this case, the variable f_+ is redundant, and it suffices to take $\varphi \in \Phi_-$ (see* (10.19)*). All boundary terms disappear when $\Omega = \mathbb{R}^n_x$.*

As for renormalised solutions, their definition is similar to the linear case. For the sake of simplicity, we only consider inflow boundary conditions if $\Omega \neq \mathbb{R}^n_x$.

Definition 10.1.14 *Let $g = (f_0, f_{\text{in}}) \in L^0(D^-_T, d\nu)$ and $(\boldsymbol{E}_0, \boldsymbol{B}_0) \in \boldsymbol{L}^1_{loc}(\Omega) \times \boldsymbol{L}^1_{loc}(\Omega)$. A renormalised solution to the Vlasov–Poisson, respectively Vlasov–Maxwell system is a couple $(f, \boldsymbol{E}) \in L^0(Q_T) \times \boldsymbol{L}^1_{loc}((0,T) \times \Omega)$, respectively a triple $(f, \boldsymbol{E}, \boldsymbol{B}) \in L^0(Q_T) \times \boldsymbol{L}^1_{loc}((0,T) \times \Omega) \times \boldsymbol{L}^1_{loc}((0,T) \times \Omega)$ such that $(\beta(u), \boldsymbol{E})$, respectively $(\beta(u), \boldsymbol{E}, \boldsymbol{B})$ is a weak solution, with entry data $\beta(g)$, for all functions $\beta(\cdot)$ satisfying* (10.21)*.*

The proof of existence of weak solutions consists in first obtaining smooth solutions to an appropriate mollified problem, by applying a fixed point theorem (typically, the Picard–Banach [63, Theorem V.7], [78, Theorem 3.7-1] or Schauder [62, Theorems II.2.9 and II.2.10], [78, Theorem 9.12-1] theorems) to the linear equation, and then pass to the limit in uniform *a priori* estimates. Generally speaking, there is no uniqueness result for this type of solution, though partial results exist that we shall review later.

To begin with, we examine the case in which $\Omega = \mathbb{R}^n_x$. The first estimates are the maximum-minimum principle, and the preservation of all L^p norms: for all $t \in (0,T)$, it holds that

$$\inf_{\mathbb{R}^{n+d}_{x,\xi}} f(t) = \inf_{\mathbb{R}^{n+d}_{x,\xi}} f_0, \quad \sup_{\mathbb{R}^{n+d}_{x,\xi}} f(t) = \sup_{\mathbb{R}^{n+d}_{x,\xi}} f_0, \quad \|f(t)\|_{L^p(\mathbb{R}^{n+d}_{x,\xi})} = \|f_0\|_{L^p(\mathbb{R}^{n+d}_{x,\xi})},$$

thanks, respectively, to the preservation of f along the characteristics

$$\boldsymbol{X}'(s) = \boldsymbol{b}(\boldsymbol{\Xi}(s)), \;\; \boldsymbol{\Xi}'(s) = \boldsymbol{E}(s,\boldsymbol{X}(s)) + \boldsymbol{v}(\boldsymbol{\Xi}(s)) \times \boldsymbol{B}(s,\boldsymbol{X}(s)) \tag{10.46}$$

respectively $\boldsymbol{X}'(s) = \boldsymbol{\Xi}(s), \;\; \boldsymbol{\Xi}'(s) = \boldsymbol{E}(s,\boldsymbol{X}(s))$ (10.47)

and to the volume-preserving property of the characteristic flow (Lemma 10.1.6), cf. Eqs. (10.24) and (10.25). An all-important conservation property is that of energy. The kinetic energy of one particle being

$$\kappa(\boldsymbol{\xi}) = \sqrt{1+|\boldsymbol{\xi}|^2} - 1 \text{ (relativistic)}, \quad \kappa(\boldsymbol{\xi}) = \tfrac{1}{2}\,|\boldsymbol{\xi}|^2 \text{ (non-relativistic)}, \tag{10.48}$$

the total energy, defined as

$$\mathcal{E}(t) := \int_{\mathbb{R}^{n+d}_{x,\xi}} \kappa(\boldsymbol{\xi})\, f(t,\boldsymbol{x},\boldsymbol{\xi})\, d\boldsymbol{x}d\boldsymbol{\xi} \; + \int_{\mathbb{R}^n_x} \frac{|\boldsymbol{E}(t,\boldsymbol{x})|^2 + |\boldsymbol{B}(t,\boldsymbol{x})|^2}{2}\, d\boldsymbol{x}$$

in the VM case, and

$$\mathcal{E}(t) := \int_{\mathbb{R}^{2n}_{x,\xi}} \frac{|\boldsymbol{\xi}|^2}{2}\, f(t,\boldsymbol{x},\boldsymbol{\xi})\, d\boldsymbol{x}d\boldsymbol{\xi} \; + \int_{\mathbb{R}^n_x} \frac{|\boldsymbol{E}(t,\boldsymbol{x})|^2}{2}\, d\boldsymbol{x}$$

in the VP case, is conserved by smooth solutions ($\mathcal{E}'(t) = 0$).

As an immediate consequence, some of the *moments* $\mu_m(t,\boldsymbol{x}) := \int_{\mathbb{R}^d_\xi} |\boldsymbol{\xi}|^m\, f(t,\boldsymbol{x},\boldsymbol{\xi})\, d\boldsymbol{\xi}$ remain integrable in $\boldsymbol{x}$ as time goes on, namely $m = 1$ for a relativistic model and $m = 2$ for a non-relativistic one. In the VP case, the electrostatic field in the VP model can be defined by the convolution in $\boldsymbol{x}$:

$$\boldsymbol{E} = \boldsymbol{G}_n * \rho[f], \quad \text{where:} \quad \boldsymbol{G}_n(\boldsymbol{x}) = \frac{\boldsymbol{x}}{\varpi_n\, |\boldsymbol{x}|^n}, \tag{10.49}$$

and ϖ_n is the $(n-1)$-dimensional area of the unit sphere of $\mathbb{R}^n$: $\varpi_1 = 2$, $\varpi_2 = 2\pi$, $\varpi_3 = 4\pi$, etc. Together with Hölder inequalities (Proposition 2.1.3), the boundedness of moments allows one to bound the density and electrostatic field in suitable L^p norms.

Proposition 10.1.15 *The following* a priori *estimates hold for the VP system:*

$$\|\rho[f(t)]\|_{L^{1+2/n}} \le C_n\, \|f_0\|^{2/(n+2)}_{L^\infty}\, \mathcal{E}(0)^{n/(n+2)}$$

and if $n \ge 3$,

$$\|\boldsymbol{E}(t)\|_{\boldsymbol{L}^p} \le C_n\, \|f_0\|^{2/(n+2)}_{L^\infty}\, \mathcal{E}(0)^{n/(n+2)}, \quad \textit{with} \quad \frac{1}{p} = \frac{n}{n+2} - \frac{1}{n}.$$

The last estimate follows from a Hardy–Sobolev–Littlewood inequality.

Lemma 10.1.16 *Let $1 < b < +\infty$ and $1 < p < b'$, with $\frac{1}{b} + \frac{1}{b'} = 1$. The convolution by $|\boldsymbol{x}|^{n/b}$ defines a bounded operator from $L^p(\mathbb{R}^n_x)$ to $L^q(\mathbb{R}^n_x)$, with $\frac{1}{q} = \frac{1}{p} + \frac{1}{b} - 1$.*

Using the line of proof sketched above, it is possible to prove the existence of weak solutions to the VP system under nearly minimal conditions.

Theorem 10.1.17 *Assume $n \geq 3$, and let $f_0 \in L^1 \cap L^\infty(\mathbb{R}^{2n}_{x,\xi})$, $f_0 \geq 0$, such that*

$$|\boldsymbol{\xi}|^2 f_0 \in L^1(\mathbb{R}^{2n}_{x,\xi}), \quad \boldsymbol{G}_n * \rho[f_0] \in \boldsymbol{L}^2(\mathbb{R}^n_x).$$

There exists a function $f : [0,T] \mapsto L^\infty(\mathbb{R}^{2n}_{x,\xi})$, continuous in time for the weak-$*$ topology, such that $(f, \boldsymbol{E}) = (f, \boldsymbol{G}_n * \rho[f])$ is a solution to (10.44)–(10.45)*, and satisfies, for any $t \geq 0$,*

$$\|f(t)\|_{L^p(\mathbb{R}^{2n}_{x,\xi})} \leq \|f_0\|_{L^p(\mathbb{R}^{2n}_{x,\xi})}, \ 1 \leq p \leq +\infty, \quad \mathcal{E}(t) \leq \mathcal{E}(0).$$

In dimension 3, it is enough [137] to have $f_0 \in L^1 \cap L^{p^*}(\mathbb{R}^6_{x,\xi})$, for $p^* \geq (12 + 3\sqrt{5})/11)$; furthermore, mass is exactly preserved: $\int_{\mathbb{R}^6_{x,\xi}} f(t)\ d\boldsymbol{x}d\boldsymbol{\xi} = \int_{\mathbb{R}^6_{x,\xi}} f_0\ d\boldsymbol{x}d\boldsymbol{\xi}$.

For renormalised solutions, we have the result by DiPerna and Lions [101].

Theorem 10.1.18 *Let $f_0 \in L^1 \cap L^{9/7}(\mathbb{R}^6_{x,\xi})$, $f_0 \geq 0$, such that*

$$\begin{aligned} &|\boldsymbol{\xi}|^2 f_0 \in L^1(\mathbb{R}^6_{x,\xi}), \quad f_0 \ln^+ f_0 \in L^1(\mathbb{R}^6_{x,\xi}), \\ &\rho[f_0] \ \left(|\boldsymbol{x}|^{-1} * \rho[f_0]\right) \in L^1(\mathbb{R}^3_x), \quad \boldsymbol{G}_3 * \rho[f_0] \in \boldsymbol{L}^2(\mathbb{R}^3_x), \end{aligned}$$

where $\ln^+ s = \max(\ln s, 0)$. There exists a renormalised solution $f \in C^0(0, +\infty; L^1(\mathbb{R}^6_{x,\xi}))$ to the Vlasov–Poisson system, such that $f \ln^+ f \in C^0(0, +\infty; L^1(\mathbb{R}^6_{x,\xi}))$, and $\mathcal{E}(t) \leq \mathcal{E}(0)$ for all $t > 0$.

The strong continuity in time is ensured by the extra conditions on f_0, which propagate in time and ensure weak compactness in L^1 according to the Dunford–Pettis criterion [63].

As mentioned above, uniqueness is only known to hold under restrictive conditions *on the solution itself*. Let us mention the following results by Zhidkov [210] and Loeper [160].

Theorem 10.1.19 *Let $f_0 \in L^1 \cap L^\infty(\mathbb{R}^{2n}_{x,\xi})$, with compact support in $(\boldsymbol{x}, \boldsymbol{\xi})$. There exists,* at most*, one weak solution f to the VP system with a support uniformly bounded on any finite time interval, i.e.,*

$$\forall T > 0, \ \exists K_T \text{ compact in } \mathbb{R}^{2n}_{x,\xi} : \forall t \in [0,T] \text{ and } (\boldsymbol{x}, \boldsymbol{\xi}) \notin K_T, \ f(t, \boldsymbol{x}, \boldsymbol{\xi}) = 0.$$

Furthermore, this solution is exactly energy-preserving: $\mathcal{E}(t) = \mathcal{E}(0)$ for all $t > 0$.

Theorem 10.1.20 *Let $f_0 \in L^1(\mathbb{R}^{2n}_{x,\xi})$ or $L^0(\mathbb{R}^{2n}_{x,\xi})$. There exists,* at most, *one weak or renormalised solution f to the VP system such that the density is bounded on any bounded time interval, i.e., $\|\rho[f]\|_{L^\infty(0,T;L^\infty(\mathbb{R}^n_x))} < +\infty$ for any finite $T > 0$.*

As for the VM system, the situation is less favourable, as the Maxwell's equations do not have good properties in L^p spaces for $p \neq 2$. The only available estimate is the L^2 bound given by the energy. Furthermore, hyperbolic equations do not have the regularising properties of elliptic ones. This inconvenience can be partly compensated for by using so-called *averaging lemmas* (see, e.g., [102]), which furnish some compactness and allow one to pass to the limit in the nonlinear term $f\,(\boldsymbol{E} + \boldsymbol{v} \times \boldsymbol{B}) \cdot \nabla_{\boldsymbol{\xi}} \varphi$ in (10.38).

All in all, using...

Proposition 10.1.21 *The following* a priori *estimates hold for the relativistic VM system:*

$$\|\rho[f(t)]\|_{L^{4/3}} + \|\boldsymbol{j}[f(t)]\|_{L^{4/3}} \leq C\,\|f_0\|^{1/4}_{L^\infty} \left(\mathcal{E}(0) + \int_{\mathbb{R}^{n+d}_{x,\xi}} f_0\, d\boldsymbol{x}\, d\boldsymbol{\xi} \right).$$

...we obtain the existence of weak solutions.

Theorem 10.1.22 *Let $f_0 \in L^1 \cap L^\infty(\mathbb{R}^n_x \times \mathbb{R}^d_\xi)$, with $f_0 \geq 0$ and $\kappa(\boldsymbol{\xi})\, f_0 \in L^1(\mathbb{R}^n_x \times \mathbb{R}^d_\xi)$, cf.* (10.48)*. Let $(\boldsymbol{E}_0, \boldsymbol{B}_0) \in \boldsymbol{L}^2(\mathbb{R}^n_x) \times \boldsymbol{L}^2(\mathbb{R}^n_x)$ verify the compatibility conditions* (10.37)*.*

There exists a triple $(f, \boldsymbol{E}, \boldsymbol{B}) : [0,T] \mapsto L^\infty(\mathbb{R}^n_x \times \mathbb{R}^d_\xi) \times \boldsymbol{L}^2(\mathbb{R}^n_x) \times \boldsymbol{L}^2(\mathbb{R}^n_x)$, continuous in time for the weak-$*$ topology, which is a solution to (10.38)–(10.40) *in the relativistic case, and satisfies, for any $t \geq 0$,*

$$f(t) \geq 0, \quad \|f(t)\|_{L^p(\mathbb{R}^{n+d}_{x,\xi})} = \|f_0\|_{L^p(\mathbb{R}^{n+d}_{x,\xi})},\ 1 \leq p \leq +\infty, \quad \mathcal{E}(t) \leq \mathcal{E}(0).$$

The proof of exact conservation of L^p norms and charge is credited to Rein [180].

In a non-relativistic framework, one gets a similar result from DiPerna and Lions [102].

Theorem 10.1.23 *Let $f_0 \in L^1 \cap L^{p^*}(\mathbb{R}^n_x \times \mathbb{R}^n_\xi)$, with p^* large enough, $f_0 \geq 0$ and $|\boldsymbol{\xi}|^2 f_0 \in L^1(\mathbb{R}^n_x \times \mathbb{R}^d_\xi)$. Let $(\boldsymbol{E}_0, \boldsymbol{B}_0) \in \boldsymbol{L}^2(\mathbb{R}^d_x) \times \boldsymbol{L}^2(\mathbb{R}^d_x)$ verify the compatibility conditions* (10.37)*.*

There exists a triple $(f, \boldsymbol{E}, \boldsymbol{B}) : [0,T] \mapsto L^1 \cap L^{p^*}(\mathbb{R}^n_x \times \mathbb{R}^d_\xi) \times \boldsymbol{L}^2(\mathbb{R}^n_x) \times \boldsymbol{L}^2(\mathbb{R}^n_x)$, continuous in time for the weak topology, which is a solution to (10.38)–(10.40) *in the non-relativistic case, and satisfies, for any $t \geq 0$,*

$$f(t) \geq 0, \quad \|f(t)\|_{L^p(\mathbb{R}^{n+d}_{x,\xi})} \leq \|f_0\|_{L^p(\mathbb{R}^{n+d}_{x,\xi})},\ 1 \leq p \leq p^*, \quad \mathcal{E}(t) \leq \mathcal{E}(0).$$

The minimal value of p^* is 2 when $n = d = 3$.

Taking boundary conditions into account when $\Omega \neq \mathbb{R}^n_x$ is slightly more technical, but basically leads to similar conclusions under reasonable assumptions. For instance, we have the following result credited to Bostan [58] for the VP system with inflow boundary conditions.

Theorem 10.1.24 *Assume that the domain Ω is smooth, and that the boundary condition on B_T^- reads as $f_- = f_{\rm in}$. Let $g = (f_0, f_{\rm in}) \in L^1 \cap L^\infty(D_T^-; d\nu)$, with $g \geq 0$ and $\kappa(\boldsymbol{\xi})\, g \in L^1(D_T^-; d\nu)$. There exists a weak solution $(f, f_+, \boldsymbol{E}, \boldsymbol{B})$ to* (10.38)–(10.40)*, which satisfies, for any $T \geq 0$,*

$$0 \leq f \leq \|g\|_{L^\infty}, \quad 0 \leq f_+ \leq \|g\|_{L^\infty}\,; \qquad \sup_{t\in[0,T]} \mathcal{E}(t) + \int_{B_T^+} \kappa(\boldsymbol{\xi})\, f_+\, d\nu \leq C\,,$$

where the constant C depends on Ω, T, f_0 and $f_{\rm in}$.

Furthermore, if there exist two non-increasing functions $F_0,\ F_{\rm in} : \mathbb{R}^+ \to \mathbb{R}^+$ such that

$$f_0(\boldsymbol{x}, \boldsymbol{\xi}) \leq F_0(|\boldsymbol{\xi}|), \quad f_{\rm in}(\boldsymbol{x}, \boldsymbol{\xi}) \leq F_{\rm in}(|\boldsymbol{\xi}|), \quad \int_{\mathbb{R}^n_\xi} (F_0(|\boldsymbol{\xi}| + F_{\rm in}(|\boldsymbol{\xi}|))\, d\boldsymbol{\xi} \leq +\infty,$$

then:

- *$\boldsymbol{E} \in L^\infty(0, T; \boldsymbol{L}^\infty(\Omega))$ and $\rho[f] \in L^\infty(0, T; L^\infty(\Omega))$ for all $T > 0$;*
- *the mappings $t \mapsto \int_{T\Omega} f(t)\, d\boldsymbol{x} d\boldsymbol{\xi}$ and $t \mapsto \mathcal{E}(t)$ are absolutely continuous, and it holds that*

$$\begin{aligned}
\frac{d}{dt} \int_{T\Omega} f(t)\, d\boldsymbol{x} d\boldsymbol{\xi} \;+\; \int_{\Sigma^+} f_+(t)\, (\boldsymbol{\xi} \cdot \boldsymbol{n}(\boldsymbol{x}))\, d\Gamma(\boldsymbol{x}) d\boldsymbol{\xi} \\
= \int_{\Sigma^-} f_{\rm in}(t)\, |\boldsymbol{\xi} \cdot \boldsymbol{n}(\boldsymbol{x})|\, d\Gamma(\boldsymbol{x}) d\boldsymbol{\xi}\,; \\
\mathcal{E}'(t) \;+\; \int_{\Sigma^+} \kappa(\boldsymbol{\xi})\, f_+(t)\, (\boldsymbol{\xi} \cdot \boldsymbol{n}(\boldsymbol{x}))\, d\Gamma(\boldsymbol{x}) d\boldsymbol{\xi} \\
= \int_{\Sigma^-} \kappa(\boldsymbol{\xi})\, f_{\rm in}(t)\, |\boldsymbol{\xi} \cdot \boldsymbol{n}(\boldsymbol{x})|\, d\Gamma(\boldsymbol{x}) d\boldsymbol{\xi}\,.
\end{aligned}$$

For the VM system with inflow and emission-absorption conditions, the following result holds according to [130].

Theorem 10.1.25 *Assume that the boundary $\Gamma \in C^{1,\mu}$ for $\mu > 0$, and that the boundary condition on B_T^- takes the form*[5] (10.7)*, with $0 \leq a \leq 1 - \epsilon < 1$. Let $g = (f_0, f_{\rm in}) \in L^1 \cap L^{p^*}(D_T^-; d\nu)$ for some $p^* \in [2, +\infty]$, with $g \geq 0$ and $\kappa(\boldsymbol{\xi})\, g \in L^1(D_T^-; d\nu)$. Let $(\boldsymbol{E}_0, \boldsymbol{B}_0) \in \boldsymbol{L}^2(\Omega) \times \boldsymbol{L}^2(\Omega)$ verify the compatibility conditions* (10.37)*.*

[5] According to [130], the proof also works for a general condition (10.30), under the condition $\|K\| < 1$.

There exists a weak solution $(f, f_+, \boldsymbol{E}, \boldsymbol{B})$ *to* (10.38)–(10.40)*, which satisfies, for any* $T \geq 0$ *and* $1 \leq p \leq p^*$*,*

$$\epsilon^{1/p} \|f_+\|_{L^p(B_T^+;d\nu)} + \|f\|_{L^p(Q_T)} \leq 2e^T \left[\|f_0\|_{L^p(T\Omega)} + \epsilon^{-1} \|f_{\text{in}}\|_{L^p(B_T^-;d\nu)}\right],$$

$$\int_0^T \mathcal{E}(t)\, dt \leq e^T \left[\mathcal{E}(0) + \int_{B_T^-} \kappa(\boldsymbol{\xi})\, f_{\text{in}}\, d\nu\right].$$

For the specular reflection condition, it is possible to take the limit $\epsilon \to 0$, as $f_{\text{in}} \equiv 0$. Thus, we arrive at the result...

Theorem 10.1.26 *Assume that the boundary* $\Gamma \in C^{1,\mu}$ *for* $\mu > 0$*, and that the boundary condition on* B_T^- *reads as* (10.6)*. Let* $f_0 \in L^1 \cap L^\infty(T\Omega)$*, with* $f_0 \geq 0$ *and* $\kappa(\boldsymbol{\xi})\, f_0 \in L^1(T\Omega)$*. Let* $(\boldsymbol{E}_0, \boldsymbol{B}_0) \in \boldsymbol{L}^2(\Omega) \times \boldsymbol{L}^2(\Omega)$ *verify the compatibility conditions* (10.37)*.*

There exists a weak solution $(f, f_+, \boldsymbol{E}, \boldsymbol{B})$ *to* (10.38)–(10.40)*, which satisfies, for any* $T \geq 0$ *and* $1 \leq p \leq +\infty$*,*

$$\|f\|_{L^p(Q_T)} \leq 2e^T \|f_0\|_{L^p(T\Omega)}, \qquad \int_0^T \mathcal{E}(t)\, dt \leq e^T\, \mathcal{E}(0),$$
$$\|f_+\|_{L^\infty(B_T^+;d\nu)} \leq 2e^T \|f_0\|_{L^\infty(T\Omega)}.$$

10.1.4 Strong solutions for Vlasov–Poisson and Vlasov–Maxwell

We group under this name the classical (i.e., C^1) and mild solutions, the latter being defined as follows.

Definition 10.1.27 *A mild solution to the Vlasov–Poisson or Vlasov–Maxwell systems is a weak solution (in the sense of Definitions 10.1.12, respectively 10.1.11) such that* $f \in L^p(Q_T)$*, the fields* $\boldsymbol{b}$ *(defined at the beginning of §10.1.3) and* $\boldsymbol{a} := \boldsymbol{E}$*, respectively* $\boldsymbol{E} + \boldsymbol{v}(\boldsymbol{\xi}) \times \boldsymbol{B}$ *satisfy the conditions (A1) and (A2), and* f *coincides with the mild* L^p *solution (in the sense of Definitions 10.1.7 or 10.1.10) to the linear Vlasov equation with advection fields* $\boldsymbol{b}$ *and* $\boldsymbol{a}$*.*

These solutions are "strong enough" to define characteristics, at least locally, which leads not only to an improved regularity, but also (as said above) to the exact preservation of various L^p norms and energy. Furthermore, they are generally unique.

The existence of such solutions can be obtained by the same principle as in the previous subsection. In the Vlasov–Poisson case, the crux is to have Lipschitz bounds on the electric field, which ensure that (A1) and (A2) hold, cf. (10.23). This is decomposed into two steps: the first consists in reducing the problem to estimating the decay of f with respect to $\boldsymbol{\xi}$, and the second in obtaining this decay practically from *a priori* estimates. The second step can

be achieved, either by characteristic estimates (as in [136]) or by *dispersion estimates* (*à la* Strichartz, see, e.g., [159]). The latter correspond to averaging lemmas by a Fourier transform in $(\boldsymbol{x}, \boldsymbol{\xi})$, and provide some regularity for the solution of hyperbolic equations.

Theorem 10.1.28 *Assume that the initial condition f_0 satisfies* either one *of the following assumptions [202, 136]:*

1. *$f_0 \in W^{1,\infty} \cap L^1(\mathbb{R}^n_x \times \mathbb{R}^n_\xi)$, and there exist $K > 0$ and $\alpha > 2n$ such that*

$$f_0(\boldsymbol{x}, \boldsymbol{\xi}) \leq K\,(1 + |\boldsymbol{x}|)^{-\alpha}\,(1 + |\boldsymbol{\xi}|)^{-\alpha}\,; \tag{10.50}$$

2. *$f_0 \in C^1 \cap L^1(\mathbb{R}^n_x \times \mathbb{R}^n_\xi)$, and there exist $K > 0$ and $\alpha > n$ such that*

$$f_0(\boldsymbol{x}, \boldsymbol{\xi}) + |\nabla_{\boldsymbol{x}} f_0(\boldsymbol{x}, \boldsymbol{\xi})| + |\nabla_{\boldsymbol{\xi}} f_0(\boldsymbol{x}, \boldsymbol{\xi})| \leq K\,(1 + |\boldsymbol{\xi}|)^{-\alpha}\,. \tag{10.51}$$

There exists a unique strong solution to the Vlasov–Poisson system (10.41)–(10.43) *in $\Omega = \mathbb{R}^n_x$, which is global (i.e., it exists for all $t > 0$) if $n = 2$ and local (defined on an interval $(0, T)$ for T small enough) if $n = 3$.*

In higher dimensions, there are counter-examples to local existence [136]. On the other hand, there are global existence results in 3D under additional assumptions: bounded support [186] or small data [30].

Theorem 10.1.29 *Let $f_0 \in C^1_c(\mathbb{R}^3_x \times \mathbb{R}^3_\xi)$ be compactly supported in $\boldsymbol{\xi}$:*

$$\exists Q_0 : \quad f_0(\boldsymbol{x}, \boldsymbol{\xi}) = 0 \text{ for } |\boldsymbol{\xi}| \geq Q_0. \tag{10.52}$$

The strong solution given by the previous theorem is global, and remains compactly supported at all finite time.

Theorem 10.1.30 *Let $f_0 \in C^1 \cap L^1(\mathbb{R}^3_x \times \mathbb{R}^3_\xi)$ such that*

$$f_0(\boldsymbol{x}, \boldsymbol{\xi}) + |\nabla_{\boldsymbol{x}} f_0(\boldsymbol{x}, \boldsymbol{\xi})| + |\nabla_{\boldsymbol{\xi}} f_0(\boldsymbol{x}, \boldsymbol{\xi})| \leq \epsilon\,(1 + |\boldsymbol{x}|)^{-4}\,(1 + |\boldsymbol{\xi}|)^{-4}\,.$$

For small enough ϵ, there exists a unique, global strong solution to the Vlasov–Poisson system (10.41)–(10.43) *in $\Omega = \mathbb{R}^3_x$.*

When $\Omega \neq \mathbb{R}^n_x$, existence is only known under very restrictive assumptions, among others:

- either Ω is a half-space, or it is bounded, smooth *and* convex;
- f_0 and f_{in} are compactly supported in $\boldsymbol{x}$ *and* $\boldsymbol{\xi}$, and satisfy some compatibility conditions.

These solutions are global [131, 138, 139].

Remark 10.1.31 *The conditions* (10.50) *or* (10.51) *are satisfied by the all-important (local) Maxwellian distribution*

$$f_0(\boldsymbol{x},\boldsymbol{\xi}) = \frac{\rho(\boldsymbol{x})}{(2\pi\,\Theta(\boldsymbol{x}))^{n/2}}\,\exp -\frac{|\boldsymbol{\xi}-\boldsymbol{u}(\boldsymbol{x})|^2}{2\,\Theta(\boldsymbol{x})}\,,$$

provided the density, bulk velocity *and* temperature *functions* ρ, $\boldsymbol{u}$, Θ *are well-behaved. On the other hand, assuming a compactly supported distribution is not very realistic. Collisions, which are inevitable in a real plasma, can give arbitrarily high velocity to particles, and make the distribution function tend towards a Maxwellian [59].*

As an *amuse-gueule*, we will sketch the *local* existence and uniqueness proof of mild solutions *with compact support in velocity* to the Vlasov–Poisson system in $\mathbb{R}^n$. Firstly, one estimates the divergence of characteristics for a linear Vlasov equation. Consider two final conditions $(t,\boldsymbol{x}_1,\boldsymbol{\xi}_1)$ and $(t,\boldsymbol{x}_2,\boldsymbol{\xi}_2)$; we use the shorthand

$$(\boldsymbol{X}_i(s),\boldsymbol{\Xi}_i(s)) := (\boldsymbol{\Xi}(s;t,\boldsymbol{x}_i,\boldsymbol{\xi}_i),\boldsymbol{\Xi}(s;t,\boldsymbol{x}_i,\boldsymbol{\xi}_i))\,,\quad i=1,\ 2.$$

Integrating the characteristic system (10.47) backward yields

$$\begin{aligned}
&|\boldsymbol{X}_1(\tau)-\boldsymbol{X}_1(\tau)| + |\boldsymbol{\Xi}_1(\tau)-\boldsymbol{\Xi}_2(\tau)|\\
&\le |\boldsymbol{x}_1-\boldsymbol{x}_2| + |\boldsymbol{\xi}_1-\boldsymbol{\xi}_2| + \int_\tau^t \{|\boldsymbol{\Xi}_1(s)-\boldsymbol{\Xi}_2(s)| + |\boldsymbol{E}(s,\boldsymbol{X}_1(s))-\boldsymbol{E}(s,\boldsymbol{X}_2(s))|\}\,ds\\
&\le |\boldsymbol{x}_1-\boldsymbol{x}_2| + |\boldsymbol{\xi}_1-\boldsymbol{\xi}_2| + \int_\tau^t \{|\boldsymbol{\Xi}_1(s)-\boldsymbol{\Xi}_2(s)| + \|\nabla\boldsymbol{E}(s)\|_{\mathbb{L}^\infty}\,|\boldsymbol{X}_1(s)-\boldsymbol{X}_2(s)|\}\,ds.
\end{aligned}$$

Hence, by Gronwall's lemma,

$$\begin{aligned}
&|\boldsymbol{X}_1(\tau)-\boldsymbol{X}_1(\tau)| + |\boldsymbol{\Xi}_1(\tau)-\boldsymbol{\Xi}_2(\tau)|\\
&\qquad\le (|\boldsymbol{x}_1-\boldsymbol{x}_2| + |\boldsymbol{\xi}_1-\boldsymbol{\xi}_2|)\,\exp\int_\tau^t (1+\|\nabla\boldsymbol{E}(s)\|_{\mathbb{L}^\infty})\,ds.
\end{aligned}$$

As $f(t,\boldsymbol{x}_i,\boldsymbol{\xi}_i) = f_0(\boldsymbol{X}_i(0),\boldsymbol{\Xi}_i(0))$, cf. (10.24), one deduces that

$$\|\nabla f(t)\|_{\boldsymbol{L}^\infty(\mathbb{R}^{2n}_{x,\xi})} \le \|\nabla f_0\|_{\boldsymbol{L}^\infty(\mathbb{R}^{2n}_{x,\xi})}\,\exp\int_0^t (1+\|\nabla\boldsymbol{E}(s)\|_{\mathbb{L}^\infty(\mathbb{R}^n_x)})\,ds. \quad (10.53)$$

A similar calculation allows one to estimate the divergence of the characteristics $(\boldsymbol{X}^1,\boldsymbol{\Xi}^1)$, $(\boldsymbol{X}^2,\boldsymbol{\Xi}^2)$ associated with two different force fields $\boldsymbol{E}^1$, $\boldsymbol{E}^2$, but *with the same final condition*:

$$\begin{aligned}
&\left|\boldsymbol{X}^1(0)-\boldsymbol{X}^2(0)\right| + \left|\boldsymbol{\Xi}^1(0)-\boldsymbol{\Xi}^2(0)\right|\\
&\qquad\le \left[\exp t\left(1+\left\|\nabla\boldsymbol{E}^2\right\|_{\mathbb{L}^\infty((0,t)\times\mathbb{R}^n_x)}\right)\right]\int_0^t \|\boldsymbol{E}^1-\boldsymbol{E}^2\|_{\boldsymbol{L}^\infty(\mathbb{R}^n_x)}\,ds\,.
\end{aligned}$$

Let $f^1,\ f^2$ be the respective solutions with forces $\boldsymbol{E}^1,\ \boldsymbol{E}^2$ and *the same initial condition* f_0. From the previous bound, we deduce that

$$\|f^1(t) - f^2(t)\|_{L^\infty(\mathbb{R}^{2n}_{x,\xi})} \leq \|\nabla f_0\|_{\boldsymbol{L}^\infty(\mathbb{R}^{2n}_{x,\xi})} \times \\ \times \left[\exp t\left(1 + \left\|\nabla \boldsymbol{E}^2\right\|_{\mathbb{L}^\infty((0,t)\times\mathbb{R}^n_x)}\right)\right] \int_0^t \|\boldsymbol{E}^1 - \boldsymbol{E}^2\|_{\boldsymbol{L}^\infty(\mathbb{R}^n_x)}\, ds\,. \quad (10.54)$$

Secondly, one derives support estimates. Following the characteristics backward shows that $f(t)$ is compactly supported in $\boldsymbol{\xi}$ if (10.52) holds:

$$|\boldsymbol{\xi}| \geq Q(t) := Q_0 + \int_0^t \|\boldsymbol{E}(s)\|_{\boldsymbol{L}^\infty(\mathbb{R}^n_x)}\, ds \quad \Longrightarrow \quad f(t,\boldsymbol{x},\boldsymbol{\xi}) = 0. \quad (10.55)$$

However, if $f(t)$ is Lipschitz and compactly supported in $\boldsymbol{\xi}$, the associated density is bounded and Lipschitz:

$$\begin{cases} \|\rho[f(t)]\|_{L^\infty(\mathbb{R}^n_x)} \leq \pi_n\, Q(t)^n\, \|f(t)\|_{L^\infty(\mathbb{R}^{2n}_{x,\xi})}\,, \\ \|\nabla\rho[f(t)]\|_{\boldsymbol{L}^\infty(\mathbb{R}^n_x)} \leq \pi_n\, Q(t)^n\, \|\nabla_{\boldsymbol{x}} f(t)\|_{\boldsymbol{L}^\infty(\mathbb{R}^{2n}_{x,\xi})}\,, \end{cases} \quad (10.56)$$

where π_n is the n-dimensional volume of the unit ball ($\pi_1 = 2,\ \pi_2 = \pi,\ \pi_3 = \frac{4}{3}\pi$, etc.).

Thirdly, one proves some new properties of the convolution by the kernel introduced in (10.49).

Lemma 10.1.32 *Let $g \in L^1 \cap W^{1,\infty}(\mathbb{R}^n_x)$. Then, $\boldsymbol{F} = \boldsymbol{G}_n * g$ belongs to $\boldsymbol{W}^{1,\infty}(\mathbb{R}^n_x)$, and satisfies*

$$\|\boldsymbol{F}\|_{\boldsymbol{L}^\infty} \leq c_1\, \|g\|_{L^\infty} + \|g\|_{L^1}\,; \quad (10.57)$$

$$\|\nabla\boldsymbol{F}\|_{\mathbb{L}^\infty} \leq c_2\, \left[1 + \|g\|_{L^1} + \|g\|_{L^\infty}\,(1 + \ln(1 + \|\nabla g\|_{\boldsymbol{L}^\infty}))\right]. \quad (10.58)$$

The constants $c_1,\ c_2$ only depend on the dimension.

Proof. The first bound follows from:

$$\boldsymbol{F}(\boldsymbol{x}) = \int_{\mathbb{R}^n} \frac{\boldsymbol{y}}{|\boldsymbol{y}|^n}\, g(\boldsymbol{x}-\boldsymbol{y})\, d\boldsymbol{y} = \int_{|\boldsymbol{y}|\leq 1} + \int_{|\boldsymbol{y}|>1}$$

$$|\boldsymbol{F}(\boldsymbol{x})| \leq \|g\|_{L^\infty} \int_{|\boldsymbol{y}|\leq 1} \frac{d\boldsymbol{y}}{|\boldsymbol{y}|^{n-1}} + \int_{|\boldsymbol{y}|>1} |g(\boldsymbol{x}-\boldsymbol{y})|\, d\boldsymbol{y}.$$

The second estimate is established by a technical calculation [136, 59]. ■

Finally, one concludes by using a fixed point argument. Fix an arbitrary time interval $(0,T)$, and consider the following subset of $L^\infty(0,T;\boldsymbol{W}^{1,\infty}(\mathbb{R}^n))$:

$$B_{R,S,T} = \Big\{\boldsymbol{w} \in L^\infty(0,T;\boldsymbol{W}^{1,\infty}(\mathbb{R}^n)) : \|\boldsymbol{w}\|_{L^\infty(0,T;\boldsymbol{L}^\infty(\mathbb{R}^n))} \leq R \\ \text{and } \|\nabla\boldsymbol{w}\|_{L^\infty(0,T;\mathbb{L}^\infty(\mathbb{R}^n))} \leq S\Big\}.$$

It is a closed subset of $L^\infty(0,T;\boldsymbol{L}^\infty(\mathbb{R}^n))$ in the canonical norm $\|\cdot\|_{L^\infty(\boldsymbol{L}^\infty)}$ of the latter space; this is an easy consequence of the Banach–Alaoglu theorem [63]. Thus, it is a complete metric space for $\|\cdot\|_{L^\infty(\boldsymbol{L}^\infty)}$.

The mapping $\mathcal{F}$ is defined as follows. Given $\boldsymbol{E} \in L^\infty(0,T;\boldsymbol{W}^{1,\infty}(\mathbb{R}^n))$, let f be the solution to the forced Vlasov equation with initial data f_0 and advection fields $\boldsymbol{a} = \boldsymbol{E}$ and $\boldsymbol{b} = \boldsymbol{\xi}$. Then, for any $t \in (0,T)$, set $(\mathcal{F}\boldsymbol{E})(t) = \boldsymbol{\mathfrak{E}}(t) := \boldsymbol{G}_n * \rho[f(t)]$. By the above arguments, $\mathcal{F}$ maps $L^\infty(0,T;\boldsymbol{W}^{1,\infty}(\mathbb{R}^n))$ to itself, provided $f_0 \in L^1 \cap W^{1,\infty}(\mathbb{R}^{2n}_{x,\xi})$ has a compact support in $\boldsymbol{\xi}$. Quantitatively, Eqs. (10.55), (10.56) and (10.57) yield

$$\|\boldsymbol{\mathfrak{E}}(t)\|_{\boldsymbol{L}^\infty} \le C_1 + C_2 \left(\int_0^t \|\boldsymbol{E}(s)\|_{\boldsymbol{L}^\infty}\, ds\right)^n$$

for some constants $C_1,\ C_2$ depending on f_0. In other words,

$$\|\boldsymbol{E}\|_{L^\infty(\boldsymbol{L}^\infty)} \le R \implies \|\boldsymbol{\mathfrak{E}}\|_{L^\infty(\boldsymbol{L}^\infty)} \le C_1 + C_2\, R^n\, T^n.$$

Thus, $\|\boldsymbol{\mathfrak{E}}\|_{L^\infty(\boldsymbol{L}^\infty)} \le R$ for $R > C_1$ and T small enough. Then, using (10.53) and (10.58), one arrives at

$$\|\nabla\boldsymbol{\mathfrak{E}}(t)\|_{\mathbb{L}^\infty} \le G_1(R) + G_2(R) \int_0^t \|\nabla\boldsymbol{E}(s)\|_{\mathbb{L}^\infty}\, ds\,.$$

So, $\mathcal{F}$ maps $B_{R,S,T}$ to itself for $R > C_1,\ S > G_1(R)$ and T small enough. Now, taking $\boldsymbol{E}^1$ and $\boldsymbol{E}^2$ in $B_{R,S,T}$, one invokes (10.54) and (10.57) again and finds, for $\boldsymbol{\mathfrak{E}}^1 = \mathcal{F}\boldsymbol{E}^1,\ \boldsymbol{\mathfrak{E}}^2 = \mathcal{F}\boldsymbol{E}^2$,

$$\|\boldsymbol{\mathfrak{E}}^1(t) - \boldsymbol{\mathfrak{E}}^2(t)\|_{\boldsymbol{L}^\infty} \le G_3(R,S,T) \int_0^t \|\boldsymbol{E}^1 - \boldsymbol{E}^2\|_{\boldsymbol{L}^\infty}\, ds\,,$$

where the function G_3 is nondecreasing w.r.t. the three arguments. Restricting T again if necessary, one sees that $\mathcal{F}$ defines a contraction mapping on $B_{R,S,T}$. By the Picard–Banach fixed point theorem, it admits a unique fixed point $\boldsymbol{E} \in B_{R,S,T}$, which defines a unique mild solution f to the Vlasov–Poisson system with the initial condition f_0 on the time interval $(0,T)$.

For the *relativistic* Vlasov–Maxwell system, the first step (estimating the decay of f) has been obtained by Glassey and Strauss [123].

Theorem 10.1.33 *Let $f_0 \in C^1(\mathbb{R}^{n+d}_{x,\xi}),\ f_0 \ge 0$ have a bounded support in $\boldsymbol{\xi}$, as in* (10.52)*, and let $(\boldsymbol{E}_0, \boldsymbol{B}_0) \in C^2(\mathbb{R}^n_x)^d$ satisfy the compatibility conditions* (10.37)*. Assume there is an* a priori *bound on momenta, i.e., there exists a function $Q : \mathbb{R}^+ \to \mathbb{R}^+$ such that any strong solution to the relativistic VM system* (10.38)–(10.40) *in $\mathbb{R}^n_x$ satisfies $f(t,\boldsymbol{x},\boldsymbol{\xi}) = 0$ for $|\boldsymbol{\xi}| \ge Q(t)$. Then, there exists a unique and global classical solution.*

The support condition can be replaced [151] with a boundedness condition on $(\boldsymbol{E}, \boldsymbol{B})$. Both are essentially equivalent, cf. (10.55). The basic idea is that the

formation of singularities is prevented by the characteristic speed of Maxwell's equations (equal to 1 in rescaled units) remaining apart from that of the Vlasov equation (at most, equal to $Q\,(1+Q^2)^{-1/2}$). So, to extend this result to a non-relativistic model, one has to assume a priori that $Q(t)$ remains strictly less than 1, which is less natural: the acceleration of particles by the electromagnetic fields tends to create, given enough time, particles of arbitrarily large momentum, i.e., arbitrarily large velocity in non-relativistic dynamics.

On the other hand, the decay estimate has so far been proven [120, 121, 122] in the $1\frac{1}{2}$D, 2D and $2\frac{1}{2}$D frameworks (see Remark 10.1.1); the 3D case remains open. The various existence and uniqueness results for the dimensions less than three have similar forms.

Theorem 10.1.34 *Let $f_0 \in C^1(\mathbb{R}^{n+d}_{x,\xi})$ be non-negative and have a bounded support in $\boldsymbol{\xi}$, and $(\boldsymbol{E}_0, \boldsymbol{B}_0) \in \left[C^2 \cap W^{2,\infty}(\mathbb{R}^n_x)\right]^d$ be compatible. There exist a unique and global classical solution $(f, \boldsymbol{E}, \boldsymbol{B})$ to the relativistic VM system in $\mathbb{R}^n_x$, and a bounding function $Q : \mathbb{R}^+ \to \mathbb{R}^+$ such that $f(t, \boldsymbol{x}, \boldsymbol{\xi}) = 0$ for $|\boldsymbol{\xi}| \geq Q(t)$.*

For the non-relativistic case, one only has a local existence and uniqueness theorem, credited to Wollman [208].

Theorem 10.1.35 *Let $f_0 \in H^s(\mathbb{R}^6_{x,\xi})$, $s \geq 5$, be non-negative and have a bounded support* in $\boldsymbol{x}$ and $\boldsymbol{\xi}$, *and $(\boldsymbol{E}_0, \boldsymbol{B}_0) \in \boldsymbol{H}^s(\mathbb{R}^3_x)$ be compatible. There exist $T > 0$, depending on the initial data, and a unique classical solution $(f, \boldsymbol{E}, \boldsymbol{B})$ to the non-relativistic VM system in $\mathbb{R}^3_x$, which satisfies $f \in C(0, T; H^s(\mathbb{R}^6_{x,\xi})) \cap C^1(0, T; H^{s-1}(\mathbb{R}^6_{x,\xi}))$.*

10.2 Magnetohydrodynamics

In this section, we will review the existence and uniqueness results on the incompressible, viscous, resistive MHD equations, introduced at the end of §1.3.2. As we shall see, these equations admit a (time-dependent) variational formulation; so, the notions of weak and strong solutions are similar to those introduced in §4.3.

10.2.1 The model

We start from the model (1.101)–(1.103). To simplify the discussion, we assume that:

1. The problem is set in a bounded domain Ω (in the sense of §2). The latter is regular in the following sense: any point of the boundary admits a neighbourhood $\mathcal{U}$ such that, either $\Omega \cap \mathcal{U}$ is convex, or $\partial\Omega \cap \mathcal{U}$ is smooth enough (at least $C^{1,1}$).

2. The fluid is encased in a perfectly conducting container. Thus, the boundary condition for the magnetic field $\boldsymbol{B}$ is the perfectly conducting one. For the velocity field $\boldsymbol{u}$, we take the no-slip or Dirichlet condition, as usual, in the presence of viscosity.[6]
3. The viscosity ν, magnetic permeability μ, and Spitzer conductivity σ_S of the fluid are all constant. (Recall that the density ρ was already assumed to be constant.)

This model fits within the framework of cavity problems.
Throughout the whole section, we denote $Q_T := (0,T)\times\Omega$, $\Sigma_T := (0,T)\times\partial\Omega$. Using the appropriate system of units for the unknowns $(\boldsymbol{u},\boldsymbol{B},p)$, and the time and space variables $(t,\boldsymbol{x})$, we rewrite the system (1.101)–(1.103) with its initial and boundary conditions as

$$\frac{\partial \boldsymbol{u}}{\partial t} - \eta_u\,\Delta\boldsymbol{u} + (\boldsymbol{u}\cdot\nabla)\boldsymbol{u} - (\mathbf{curl}\,\boldsymbol{B})\times\boldsymbol{B} + \mathbf{grad}\,p = \boldsymbol{f} \quad \text{in } Q_T, \tag{10.59}$$

$$\frac{\partial \boldsymbol{B}}{\partial t} + \eta_B\ \mathbf{curl}\,\mathbf{curl}\,\boldsymbol{B} - \mathbf{curl}(\boldsymbol{u}\times\boldsymbol{B}) = 0 \quad \text{in } Q_T, \tag{10.60}$$

$$\operatorname{div}\boldsymbol{u} = 0 \quad \text{in } Q_T, \qquad \boldsymbol{u} = 0 \quad \text{on } \Sigma_T, \tag{10.61}$$

$$\operatorname{div}\boldsymbol{B} = 0 \quad \text{in } Q_T, \qquad \boldsymbol{B}\cdot\boldsymbol{n} = 0 \text{ and } \mathbf{curl}\,\boldsymbol{B}\times\boldsymbol{n} = 0 \quad \text{on } \Sigma_T, \tag{10.62}$$

$$\boldsymbol{u}(0) = \boldsymbol{u}_0 \quad \text{in } \Omega, \tag{10.63}$$

$$\boldsymbol{B}(0) = \boldsymbol{B}_0 \quad \text{in } \Omega, \tag{10.64}$$

Recall that $(\boldsymbol{a}\cdot\nabla)\boldsymbol{b}$ stands for $\sum_{i=1}^3 a_i\,\partial_{x_i}\boldsymbol{b}$. The condition $\mathbf{curl}\,\boldsymbol{B}\times\boldsymbol{n} = 0$ is similar to (7.10), as the term $\boldsymbol{u}\times\boldsymbol{B}$ plays the role of a current and vanishes on the boundary thanks to the second part of (10.61). The constant coefficients $\eta_u,\ \eta_B$ are called the inverse hydrodynamic and magnetic Reynolds numbers.

A two-dimensional version would be as follows, using the notations of §9:

$$\frac{\partial \mathbf{u}}{\partial t} - \eta_u\,\Delta\mathbf{u} + (\mathbf{u}\cdot\nabla)\mathbf{u} - (\operatorname{curl}\mathbf{B})\,\mathbf{B}^\perp + \mathbf{grad}\,p = \mathbf{f} \quad \text{in } Q_T, \tag{10.65}$$

$$\frac{\partial \mathbf{B}}{\partial t} + \eta_B\ \mathbf{curl}\operatorname{curl}\mathbf{B} - \mathbf{curl}(\mathbf{u}\cdot\mathbf{B}^\perp) = 0 \quad \text{in } Q_T, \tag{10.66}$$

with obvious adaptations for (10.61)–(10.64). It is derived from the 3D model by assuming that the domain is invariant by translation and setting $\partial_z = 0,\ u_z = 0$ and $B_z =$ constant.

Setting $\boldsymbol{B} = 0$, Eqs. (10.59), (10.61), (10.63) constitute an incompressible Navier–Stokes system. Therefore, one cannot expect more from our system than what is known for Navier–Stokes, viz., global existence and uniqueness of weak and strong solutions in 2D, global existence of weak solutions and local existence and uniqueness of strong ones in 3D, under suitable assumptions about the right-hand side $\boldsymbol{f}$ and the initial data $(\boldsymbol{u}_0,\boldsymbol{B}_0)$. As a matter of

[6] We refer to the textbooks [199, 118, 62] for the various statements about fluid mechanics in general, and the Stokes and Navier–Stokes equations in particular.

fact [188], similar results hold for (10.59)–(10.64) and its 2D version, because the evolution equations (10.59)–(10.60) or (10.65)–(10.66), roughly speaking, share the same structure. Reinterpreting the pressure variable p as the Lagrange multiplier associated with the constraint $\operatorname{div} \boldsymbol{u} = 0$, the symmetry between them becomes more apparent if we add to the left-hand side of (10.60) the (vanishing) terms $-\eta_B \, \mathbf{grad} \operatorname{div} \boldsymbol{B} + \mathbf{grad}\, p_B$, with $p_B = 0$. In the language of §7.4.2, we use a mixed augmented formulation: both Eqs. (10.60) and (10.59) appear as vector heat equations with non-linear first-order terms and linear constraints.

Furthermore, the non-linear terms also have a similar structure. Using the identities

$$\begin{aligned}
\mathbf{curl}(\boldsymbol{a} \times \boldsymbol{b}) &= (\operatorname{div} \boldsymbol{b})\, \boldsymbol{a} - (\operatorname{div} \boldsymbol{a})\, \boldsymbol{b} + (\boldsymbol{b} \cdot \nabla)\boldsymbol{a} - (\boldsymbol{a} \cdot \nabla)\boldsymbol{b}, \\
\mathbf{grad}(\boldsymbol{a} \cdot \boldsymbol{b}) &= \boldsymbol{a} \times \mathbf{curl}\, \boldsymbol{b} + \boldsymbol{b} \times \mathbf{curl}\, \boldsymbol{a} + (\boldsymbol{a} \cdot \nabla)\boldsymbol{b} + (\boldsymbol{b} \cdot \nabla)\boldsymbol{a},
\end{aligned}$$

and using $\operatorname{div} \boldsymbol{u} = \operatorname{div} \boldsymbol{B} = 0$, we rewrite the evolution equations (10.59)–(10.60) as [188]:

$$\frac{\partial \boldsymbol{u}}{\partial t} - \eta_u \, \Delta \boldsymbol{u} + (\boldsymbol{u} \cdot \nabla)\boldsymbol{u} - (\boldsymbol{B} \cdot \nabla)\boldsymbol{B} + \mathbf{grad}\, p_u = \boldsymbol{f} \quad \text{in } Q_T, \tag{10.67}$$

$$\frac{\partial \boldsymbol{B}}{\partial t} + \eta_B \, \Delta \boldsymbol{B} + (\boldsymbol{u} \cdot \nabla)\boldsymbol{B} - (\boldsymbol{B} \cdot \nabla)\boldsymbol{u} + \mathbf{grad}\, p_B = 0 \quad \text{in } Q_T, \tag{10.68}$$

$$\text{with:} \quad p_u := p + \tfrac{1}{2}\, |\boldsymbol{B}|^2.$$

We keep the constraint equations (10.61)–(10.62) and initial conditions (10.63)–(10.64).

10.2.2 Variational formulation and energy equality

At each time t, the variables $(\boldsymbol{u}(t), p_u(t))$ belong to $\boldsymbol{H}_0^1(\Omega) \times L^2_{zmv}(\Omega)$ as usual, and $\boldsymbol{B}(t) \in \boldsymbol{X}_T(\Omega) = \boldsymbol{H}(\mathbf{curl}, \Omega) \cap \boldsymbol{H}_0(\operatorname{div}, \Omega)$, as argued in §5.2.1. The vanishing multiplier $p_B(t)$ is also seen as an element of $L^2_{zmv}(\Omega)$; this will be justified below. Due to the regularity assumption about Ω, the space $\boldsymbol{X}_T(\Omega)$ is algebraically and topologically equal to $\boldsymbol{H}_T^1(\Omega) := \boldsymbol{H}^1(\Omega) \cap \boldsymbol{H}_0(\operatorname{div}, \Omega)$, i.e., the canonical $\boldsymbol{X}$ norm is equivalent to the $\boldsymbol{H}^1$ norm. This follows from [48, 50] in the general case. Simpler proofs are given in [118] (see Proposition I.3.1 for a 2D domain, Theorem I.3.8 for a $C^{1,1}$ 3D domain, and Theorem I.3.9 for a convex polyhedron), and [17, §5] and [18, Theorem 3.12] for an axisymmatric domain. For the sake of conciseness, we introduce synthetic notations for the variables and function spaces:

$$\begin{aligned}
&\boldsymbol{\Phi} = \begin{pmatrix} \boldsymbol{u} \\ \boldsymbol{B} \end{pmatrix}, \quad P = \begin{pmatrix} p_u \\ p_B \end{pmatrix}, \quad \boldsymbol{F} = \begin{pmatrix} \boldsymbol{f} \\ 0 \end{pmatrix}; \\
&\mathcal{H} = \boldsymbol{L}^2(\Omega) \times \boldsymbol{L}^2(\Omega), \quad \mathcal{V} = \boldsymbol{H}_0^1(\Omega) \times \boldsymbol{H}_T^1(\Omega), \\
&\mathcal{Q} = L^2_{zmv}(\Omega) \times L^2_{zmv}(\Omega).
\end{aligned}$$

Assuming $\boldsymbol{F} \in L^2(0,T;\mathcal{V}')$, i.e., $\boldsymbol{f} \in L^2(0,T;\boldsymbol{H}^{-1}(\Omega))$, one takes the dot product of (10.67) by $\boldsymbol{v} \in \boldsymbol{H}_0^1(\Omega)$ and the dot product of (10.68) by $\boldsymbol{C} \in \boldsymbol{H}_T^1(\Omega)$, and adds the resulting equations. Similarly, one multiplies the divergence constraints by $q_u \in L^2_{zmv}(\Omega)$ and $q_B \in L^2_{zmv}(\Omega)$, and adds the resulting equations. Thus, one arrives at the mixed formulation:
Find $\boldsymbol{\Phi} \in L^2(0,T;\mathcal{V})$ *and* $P \in H^{-1}(0,T;\mathcal{Q})$ *such that, for all* $(\boldsymbol{\Psi}, Q) \in \mathcal{V} \times \mathcal{Q}$,

$$\frac{d}{dt}(\boldsymbol{\Phi}(t) \mid \boldsymbol{\Psi}) + a(\boldsymbol{\Phi}(t), \boldsymbol{\Psi}) + c(\boldsymbol{\Phi}(t); \boldsymbol{\Phi}(t), \boldsymbol{\Psi}) + b(\boldsymbol{\Psi}, P(t)) = \langle \boldsymbol{F}(t), \boldsymbol{\Psi} \rangle, \tag{10.69}$$

$$b(\boldsymbol{\Phi}(t), Q) = 0, \tag{10.70}$$

$$\boldsymbol{\Phi}(0) = \boldsymbol{\Phi}_0, \tag{10.71}$$

where we have set

$$\begin{aligned}
\boldsymbol{\Psi} &= \begin{pmatrix} \boldsymbol{v} \\ \boldsymbol{C} \end{pmatrix}, \quad Q = \begin{pmatrix} q_u \\ q_B \end{pmatrix}; \\
a(\boldsymbol{\Phi}, \boldsymbol{\Psi}) &:= \eta_u\, a_u(\boldsymbol{u}, \boldsymbol{v}) + \eta_B\, a_B(\boldsymbol{B}, \boldsymbol{C}) \;:=\; \eta_u\, (\mathbf{grad}\, \boldsymbol{u} \mid \mathbf{grad}\, \boldsymbol{v}) \\
&\qquad + \eta_B\, \{(\mathbf{curl}\, \boldsymbol{B} \mid \mathbf{curl}\, \boldsymbol{C}) + (\operatorname{div} \boldsymbol{B} \mid \operatorname{div} \boldsymbol{C})\}, \\
b(\boldsymbol{\Psi}, Q) &:= (\operatorname{div} \boldsymbol{v} \mid q_u) + (\operatorname{div} \boldsymbol{C} \mid q_B), \\
c(\boldsymbol{\Phi}_1; \boldsymbol{\Phi}_2, \boldsymbol{\Phi}_3) &:= d(\boldsymbol{u}_1; \boldsymbol{u}_2, \boldsymbol{u}_3) - d(\boldsymbol{B}_1; \boldsymbol{B}_2, \boldsymbol{u}_3) \\
&\qquad + d(\boldsymbol{u}_1; \boldsymbol{B}_2, \boldsymbol{B}_3) - d(\boldsymbol{B}_1; \boldsymbol{u}_2, \boldsymbol{B}_3), \quad \text{with:} \qquad (10.72) \\
d(\boldsymbol{a}_1; \boldsymbol{a}_2, \boldsymbol{a}_3) &:= \int_\Omega (\boldsymbol{a}_1 \cdot \nabla) \boldsymbol{a}_2 \cdot \boldsymbol{a}_3 \, d\Omega \qquad (10.73)
\end{aligned}$$

Let us comment on the various terms appearing in this formulation. The bilinear form a is used to define the energy norm $\|\boldsymbol{\Psi}\|^2_{\mathcal{V}} := a(\boldsymbol{\Psi}, \boldsymbol{\Psi}) = \eta_u \, \|\, \mathbf{grad}\, \boldsymbol{v}\|^2_{\boldsymbol{L}^2(\Omega)} + \eta_B \|\boldsymbol{C}\|^2_{\boldsymbol{X}}$, which is equivalent to the canonical norm of $\mathcal{V}$. The dual norm of $\mathcal{V}'$ is, of course, defined with respect to the latter.

The bilinear form b satisfies an inf-sup condition in $\mathcal{V} \times \mathcal{Q}$, as established, respectively, in [118, Theorem I.5.1] for the Stokes part $(\boldsymbol{u}, p_u)$ and [85, Theorem 7.5] for the Maxwell part $(\boldsymbol{B}, p_B)$. Its kernel is

$$\begin{aligned}
\mathcal{K} &:= \boldsymbol{K}_0(\Omega) \times \boldsymbol{K}_T(\Omega) \\
&:= \left(\boldsymbol{H}_0^1(\Omega) \cap \boldsymbol{H}(\operatorname{div} 0, \Omega)\right) \times \left(\boldsymbol{H}(\mathbf{curl}, \Omega) \cap \boldsymbol{H}_0(\operatorname{div} 0, \Omega)\right).
\end{aligned}$$

Unlike $\boldsymbol{K}_T(\Omega)$, the kernel $\boldsymbol{K}_0(\Omega)$ does not satisfy a double orthogonality property (Definition 4.3.17) in $\boldsymbol{H}_0^1(\Omega)$ and $\boldsymbol{L}^2(\Omega)$. Actually, this is not too much of a drawback, because the part of the variable $\boldsymbol{u}$ that is orthogonal to $\boldsymbol{K}_0(\Omega)$ (in any sense...) vanishes.

The *trilinear* form $c(\boldsymbol{\Phi}_1; \boldsymbol{\Phi}_2, \boldsymbol{\Phi}_3)$ is well-defined for all $(\boldsymbol{\Phi}_1, \boldsymbol{\Phi}_2, \boldsymbol{\Phi}_3) \in \mathcal{V}^3$ and continuous thanks to Sobolev imbeddings. The product operator is continuous [62, Prop. II.1.17] from $L^p(\Omega) \times L^q(\Omega)$ to $L^r(\Omega)$, with $\frac{1}{r} = \frac{1}{p} + \frac{1}{q}$, as can be readily checked. Moreover, in both two and three dimensions [63],

$H^1(\Omega) \subset L^q(\Omega)$ for $q \le 6$; by duality, $L^p(\Omega) \subset H^1(\Omega)'$ for $p \ge \frac{6}{5}$. In particular, for $q = 4$ one has the estimate

$$\|w\|_{L^4} \le C \, \|w\|_{L^2}^{1-d/4} \, \|w\|_{H^1}^{d/4},$$

with d the space dimension. This implies that

$$\begin{aligned} |c(\boldsymbol{\Phi}_1; \boldsymbol{\Phi}_2, \boldsymbol{\Phi}_3)| &\le C \, \|\boldsymbol{\Phi}_1\|_{\boldsymbol{L}^4} \, \|\boldsymbol{\Phi}_2\|_{\boldsymbol{H}^1} \, \|\boldsymbol{\Phi}_3\|_{\boldsymbol{L}^4} \\ &\le C \, \|\boldsymbol{\Phi}_1\|_{\mathcal{H}}^{1-d/4} \, \|\boldsymbol{\Phi}_1\|_{\mathcal{V}}^{d/4} \, \|\boldsymbol{\Phi}_2\|_{\mathcal{V}} \, \|\boldsymbol{\Phi}_3\|_{\mathcal{H}}^{1-d/4} \, \|\boldsymbol{\Phi}_3\|_{\mathcal{V}}^{d/4}. \end{aligned} \tag{10.74}$$

Furthermore, it is skew-symmetric in the second and third variables, i.e.,

$$\forall (\boldsymbol{\Phi}_1, \boldsymbol{\Phi}_2) \in \mathcal{K} \times \mathcal{V}, \quad c(\boldsymbol{\Phi}_1; \boldsymbol{\Phi}_2, \boldsymbol{\Phi}_2) = 0. \tag{10.75}$$

Actually, a simple integration by parts in (10.73) proves that, for $\boldsymbol{a}_1 \in \boldsymbol{H}(\mathrm{div}, \Omega)$ and $(\boldsymbol{a}_2, \boldsymbol{a}_3) \in \boldsymbol{C}^1(\overline{\Omega})^2$,

$$d(\boldsymbol{a}_1; \boldsymbol{a}_2, \boldsymbol{a}_3) + d(\boldsymbol{a}_1; \boldsymbol{a}_3, \boldsymbol{a}_2) + \int_\Omega (\mathrm{div}\, \boldsymbol{a}_1) \, \boldsymbol{a}_2 \cdot \boldsymbol{a}_3 \, d\Omega = \int_{\partial\Omega} (\boldsymbol{a}_1 \cdot \boldsymbol{n}) \, \boldsymbol{a}_2 \cdot \boldsymbol{a}_3 \, d\Gamma.$$

By a density argument, one infers $d(\boldsymbol{a}_1; \boldsymbol{a}_2, \boldsymbol{a}_3) + d(\boldsymbol{a}_1; \boldsymbol{a}_3, \boldsymbol{a}_2) = 0$ for any $(\boldsymbol{a}_2, \boldsymbol{a}_3) \in \boldsymbol{H}^1(\Omega)$ and $\boldsymbol{a}_1 \in \boldsymbol{H}_0(\mathrm{div}\, 0, \Omega)$; then, (10.75) follows from the definition (10.72).

All in all, the formulation (10.69)–(10.71) has exactly the same structure as the weak formulation of the incompressible Navier–Stokes equations [199, 62]. Eq. (10.69) must hold in $H^{-1}(0, T)$; the meaning of the initial condition (10.71) will be specified later. Setting $\boldsymbol{\Psi} = \boldsymbol{\Phi}(t)$, using (10.75) and integrating in time, we have an energy conservation equality for smooth enough solutions:

$$\frac{1}{2} \, \|\boldsymbol{\Phi}(t)\|_{\mathcal{H}}^2 + \int_0^t \|\boldsymbol{\Phi}(s)\|_{\mathcal{V}}^2 \, ds = \frac{1}{2} \, \|\boldsymbol{\Phi}_0\|_{\mathcal{H}}^2 + \int_0^t \langle \boldsymbol{F}(s), \boldsymbol{\Phi}(s) \rangle \, ds, \tag{10.76}$$

from which we deduce an energy bound

$$\|\boldsymbol{\Phi}(t)\|_{\mathcal{H}}^2 + \int_0^t \|\boldsymbol{\Phi}(s)\|_{\mathcal{V}}^2 \, ds \le \|\boldsymbol{\Phi}_0\|_{\mathcal{H}}^2 + \int_0^t \|\boldsymbol{F}(s)\|_{\mathcal{V}'}^2 \, ds. \tag{10.77}$$

10.2.3 The linear stationary equations

Keeping only the linear terms in (10.69)–(10.70) and setting the time derivatives to zero, we consider the following mixed problem:
Find $(\boldsymbol{\Phi}, P) \in \mathcal{V} \times \mathcal{Q}$ *such that, for all* $(\boldsymbol{\Psi}, Q) \in \mathcal{V} \times \mathcal{Q}$,

$$a(\boldsymbol{\Phi}, \boldsymbol{\Psi}) + b(\boldsymbol{\Psi}, P) = \langle \boldsymbol{F}, \boldsymbol{\Psi} \rangle_{\mathcal{V}} \tag{10.78}$$

$$b(\boldsymbol{\Phi}, Q) = 0. \tag{10.79}$$

In this subsection, $\boldsymbol{F} = \begin{pmatrix} \boldsymbol{F}_u \\ \boldsymbol{F}_B \end{pmatrix} \in \mathcal{V}'$ does not necessarily have the same structure as in (10.69). The above problem is thus equivalent to the conjunction of a Stokes problem and a magnetostatic problem:

$$\begin{aligned} \eta_u\, a_u(\boldsymbol{u}, \boldsymbol{v}) + (p_u \mid \operatorname{div} \boldsymbol{v}) &= \langle \boldsymbol{F}_u, \boldsymbol{v} \rangle_{\boldsymbol{H}_0^1(\Omega)} \\ (\operatorname{div} \boldsymbol{u} \mid q_u) &= 0, \\ \eta_B\, a_B(\boldsymbol{B}, \boldsymbol{C}) + (p_B \mid \operatorname{div} \boldsymbol{C}) &= \langle \boldsymbol{F}_B, \boldsymbol{C} \rangle_{\boldsymbol{X}_T(\Omega)} \\ (\operatorname{div} \boldsymbol{B} \mid q_B) &= 0. \end{aligned}$$

The source problem (10.78)–(10.79) is well-posed for all $\boldsymbol{F} \in \mathcal{V}'$ by the Babuška–Brezzi Theorem 4.2.19. As argued there, it can be rewritten as

$$\mathtt{A}\boldsymbol{\Phi} = \boldsymbol{\Pi}_{\mathcal{K}} \boldsymbol{F},$$

where $\mathtt{A} : \mathcal{K} \to \mathcal{K}'$ is the operator defined by the form a *on the kernel of* $b(\cdot, \cdot)$:

$$\langle \mathtt{A}\boldsymbol{\Phi}, \boldsymbol{\Psi} \rangle_{\mathcal{K}} = a(\boldsymbol{\Phi}, \boldsymbol{\Psi}),$$

and $\boldsymbol{\Pi}_{\mathcal{K}} : \mathcal{V}' \to \mathcal{K}'$ is a restriction operator: $\langle \boldsymbol{\Pi}_{\mathcal{K}} \boldsymbol{F}, \boldsymbol{\Psi} \rangle_{\mathcal{K}} = \langle \boldsymbol{F}, \boldsymbol{\Psi} \rangle_{\mathcal{V}}$.

We also consider the eigenproblem with constraints

$$\begin{aligned} a(\boldsymbol{e}_i, \boldsymbol{\Psi}) + b(\boldsymbol{\Psi}, \chi_i) &= \lambda_i\, (\boldsymbol{e}_i \mid \boldsymbol{\Psi}) \\ b(\boldsymbol{e}_i, Q) &= 0, \end{aligned}$$

or equivalently,

$$\mathtt{A}\boldsymbol{e}_i = \lambda_i\, \boldsymbol{e}_i.$$

From [118, Theorem I.2.8], we deduce that the space

$$\mathcal{L} := \boldsymbol{H}_0(\operatorname{div} 0, \Omega) \times \boldsymbol{H}_0(\operatorname{div} 0, \Omega)$$

is the closure of $\mathcal{K}$ within $\mathcal{H}$. As the imbedding $\mathcal{V} \subset \mathcal{H}$ — or equivalently, $\mathcal{K} \subset \mathcal{L}$ — is compact, Theorem 4.5.13 shows the existence of a sequence $(\lambda_i)_{i \in \mathbb{N}}$ of strictly positive eigenvalues tending to $+\infty$, and of a Hilbert basis $(\boldsymbol{e}_i)_{i \in \mathbb{N}}$ of $\mathcal{L}$ such that $(\lambda_i^{1/2}\, \boldsymbol{e}_i)_i$ is a Hilbert basis for $\mathcal{K}$. As in §4.4, we define the $\mathtt{A}$-Sobolev scale $(\mathcal{K}^s)_{s \in \mathbb{R}}$; these spaces naturally appear as Cartesian products $\mathcal{K}^s = \boldsymbol{K}_u^s \times \boldsymbol{K}_B^s$. Furthermore, $\mathcal{K}^{-1}$ appears as the dual space of $\mathcal{K}$ with $\mathcal{L}$ as the pivot space, different from the usual dual space $\mathcal{K}'$. The component $\boldsymbol{K}_u^{-1}$ relevant for the instationary model is $\boldsymbol{K}_u^{-1} = \{\boldsymbol{f} \in \boldsymbol{H}^{-1}(\Omega) : \operatorname{div} \boldsymbol{f} = 0\}$. On the other hand, $\mathcal{K}'$ is not a space of distributions.

We then have the following regularity results.

Proposition 10.2.1 *Assume that the boundary Γ is smooth enough, or that Ω is a* convex *polygon ($d = 2$), polyhedron or axisymmetric domain ($d = 3$). There exist two exponents $s_\star^u$, $s_\star^B > 1$ such that the solution $\boldsymbol{\Phi} = (\boldsymbol{u}, \boldsymbol{B})$ to* (10.78)–(10.79) *satisfies:*

$$\forall s \in [1, s_\star^u), \qquad \boldsymbol{F}_u \in \boldsymbol{H}^{s-2}(\Omega) \implies \boldsymbol{u} \in \boldsymbol{H}^s(\Omega),$$
$$\forall s \in [1, s_\star^B), \qquad \boldsymbol{F}_B \in \boldsymbol{H}^{s-2}(\Omega) \implies \boldsymbol{B} \in \boldsymbol{H}^s(\Omega).$$

Hence, $\boldsymbol{K}_u^s = \boldsymbol{K}_0(\Omega) \cap \boldsymbol{H}^s(\Omega)$ *and* $\boldsymbol{K}_B^s = \boldsymbol{K}_T(\Omega) \cap \boldsymbol{H}^s(\Omega)$ *for* $1 \le s < s_\star^u$ *and* $1 \le s < s_\star^B$*, respectively.*

Proof. For the magnetic variable $\boldsymbol{B}$, see [89] for the general case and [82] for the case of axisymmetric domains; though those works chiefly deal with electric field equations, the adaptation to the magnetic boundary condition is not too difficult. For the fluid variable $\boldsymbol{u}$, see [62, Proposition III.3.18], [126, §6.2] or [45, Theorem IX.1.6] for the respective cases of a $C^{1,1}$ domain, a (convex) polygon and a (convex) axisymmetric domain. The case of a convex polyhedron can be dealt with by combining the ideas of [89] with those of the above works, the crux being the ellipticity of both the Stokes and magnetostatic equations. ■

10.2.4 Weak and strong solutions to the evolution problem

We return to the evolution problem (10.69)–(10.71). The famous theorem proved by Leray [155] for the incompressible Navier–Stokes equations has its counterpart for our system.

Theorem 10.2.2 *Let* $T > 0$*,* $\boldsymbol{\Phi}_0 \in \mathcal{L}$ *and* $\boldsymbol{F} \in L^2(0,T;\mathcal{V}')$ *(i.e.,* $\boldsymbol{f} \in L^2(0,T;\boldsymbol{H}^{-1}(\Omega))$*). There exists a solution* $(\boldsymbol{\Phi}, P)$ *to* (10.69)–(10.71)*, which has the regularity*

$$\boldsymbol{\Phi} \in L^\infty(0,T;\mathcal{L}) \cap L^2(0,T;\mathcal{K}), \quad \boldsymbol{\Phi}' \in L^{4/d}(0,T;\mathcal{K}') \cap L^2(0,T;\mathcal{K}^{-d/2}),$$
$$P \in W^{-1,\infty}(0,T;\mathcal{Q}),$$

where d *is the space dimension. Furthermore:*

- *if* $d = 2$*, this solution is* unique*, with* $\boldsymbol{\Phi} \in C^0([0,T];\mathcal{L})$ *satisfying the energy conservation equality* (10.76)*;*
- *if* $d = 3$*,* $\boldsymbol{\Phi}$ *belongs to* $C^0([0,T];\mathcal{K}^{-1/4})$*; seen as a function* $[0,T] \to \mathcal{H}$*, it is continuous for the weak topology; and it satisfies the energy dissipation* inequality*:*

$$\frac{1}{2}\|\boldsymbol{\Phi}(t)\|_{\mathcal{H}}^2 + \int_0^t \|\boldsymbol{\Phi}(s)\|_{\mathcal{V}}^2\,ds \le \frac{1}{2}\|\boldsymbol{\Phi}_0\|_{\mathcal{H}}^2 + \int_0^t \langle \boldsymbol{F}(s), \boldsymbol{\Phi}(s)\rangle\,ds. \tag{10.80}$$

The existence of more regular solutions can also be proven under assumptions similar to the Navier–Stokes case.

Theorem 10.2.3 *Let* $T > 0$*,* $\boldsymbol{\Phi}_0 \in \mathcal{K}$ *and* $\boldsymbol{F} \in L^2(0,T;\mathcal{H})$ *(i.e.,* $\boldsymbol{f} \in L^2(0,T;\boldsymbol{L}^2(\Omega))$*). Then, if* $d = 2$*, there exists a unique solution* $(\boldsymbol{\Phi}, P)$ *to* (10.69)–(10.71)*, which satisfies the energy equality* (10.76)*, and has the regularity*

$$\boldsymbol{\Phi} \in C^0([0,T];\mathcal{K}) \cap L^2(0,T;\mathcal{K}^2), \quad \boldsymbol{\Phi}' \in L^2(0,T;\mathcal{L}),$$
$$P \in L^2(0,T;H^1(\Omega) \times H^1(\Omega)).$$

If $d = 3$, all the above conclusions remain valid, provided T is less than a limiting value $T_\star > 0$, depending on Ω, η_u, η_B, $\boldsymbol{\Phi}_0$ and $\boldsymbol{F}$. Furthermore, there exists a constant $C := C(\Omega, \eta_u, \eta_B)$ such that if $\boldsymbol{F} \in L^\infty(0,T;\mathcal{H})$ and

$$\|\boldsymbol{\Phi}_0\|_{\mathcal{V}} \leq C, \quad \|\boldsymbol{F}\|_{L^\infty(0,T;\mathcal{H})} \leq C,$$

then, $T_\star = +\infty$.

We will only sketch the proof of Theorem 10.2.2. Following an argument used many times in §4, it is equivalent to consider a problem set in the kernel: *Find $\boldsymbol{\Phi} \in L^2(0,T;\mathcal{K})$ such that, for all $\boldsymbol{\Psi} \in \mathcal{K}$,*

$$\frac{d}{dt}(\boldsymbol{\Phi}(t) \mid \boldsymbol{\Psi}) + a(\boldsymbol{\Phi}(t), \boldsymbol{\Psi}) + c(\boldsymbol{\Phi}(t); \boldsymbol{\Phi}(t), \boldsymbol{\Psi}) = \langle \boldsymbol{F}(t), \boldsymbol{\Psi} \rangle, \tag{10.81}$$

$$\boldsymbol{\Phi}(0) = \boldsymbol{\Phi}_0. \tag{10.82}$$

Remark that, for any $\boldsymbol{\Phi} \in L^2(0,T;\mathcal{K})$ satisfying (10.81) and any $\boldsymbol{\Psi} \in \mathcal{K}$, the derivative of $t \mapsto (\boldsymbol{\Phi}(t) \mid \boldsymbol{\Psi})$ is identified with a function in $L^1(0,T)$. This allows one to give a meaning to $(\boldsymbol{\Phi}(0) \mid \boldsymbol{\Psi})$, and then to identify $\boldsymbol{\Phi}(0)$ as an element of $\mathcal{L}$, as $\mathcal{K}$ is dense in $\mathcal{L}$. In the same spirit, the evolution equation (10.81) can be written in operator form:

$$\boldsymbol{\Phi}'(t) + \mathtt{A}\,\boldsymbol{\Phi}(t) + \mathtt{C}(\boldsymbol{\Phi}(t); \boldsymbol{\Phi}(t)) = \boldsymbol{\Pi}_{\mathcal{K}}\,\boldsymbol{F}(t) \quad \text{in } L^1(0,T;\mathcal{K}').$$

Of course, the bilinear operator $\mathtt{C} : \mathcal{K} \times \mathcal{K} \to \mathcal{K}'$ is defined as $\forall \boldsymbol{\Psi} \in \mathcal{K}$, $\langle \mathtt{C}(\boldsymbol{\Phi}_1; \boldsymbol{\Phi}_2), \boldsymbol{\Psi} \rangle_{\mathcal{K}} := c(\boldsymbol{\Phi}_1; \boldsymbol{\Phi}_2, \boldsymbol{\Psi})$. Using the continuity and skew-symmetry properties (10.74) and (10.75), one finds the continuity bound:

$$\|\mathtt{C}(\boldsymbol{\Phi}; \boldsymbol{\Phi})\|_{\mathcal{K}'} \leq C\,\|\boldsymbol{\Phi}\|_{\mathcal{H}}^{1-d/2}\,\|\boldsymbol{\Phi}\|_{\mathcal{V}}^{d/2}. \tag{10.83}$$

This problem is solved by a *Galerkin approximation method*. We introduce the finite-dimensional space spanned by the eigenfunctions of the operator $\mathtt{A}$:

$$\mathcal{K}_N := \operatorname{span}\{\boldsymbol{e}_1, \dots, \boldsymbol{e}_N\}.$$

Notice that the orthogonal projection operator in $\mathcal{V}$-norm $\boldsymbol{P}_N : \mathcal{K} \to \mathcal{K}_N$ is also orthogonal in $\mathcal{H}$-norm; so, it admits an extension to $\mathcal{L}$. Then, we consider the evolution problem set in $\mathcal{K}_N$:
Find $\boldsymbol{\Phi}_N \in C^1([0,T];\mathcal{K}_N)$ such that, for all $\boldsymbol{\Psi}_N \in \mathcal{K}_N$,

$$\frac{d}{dt}(\boldsymbol{\Phi}_N(t) \mid \boldsymbol{\Psi}_N) + a(\boldsymbol{\Phi}_N(t), \boldsymbol{\Psi}_N) + c(\boldsymbol{\Phi}_N(t); \boldsymbol{\Phi}_N(t), \boldsymbol{\Psi}_N) = \langle \boldsymbol{F}_N(t), \boldsymbol{\Psi}_N \rangle, \tag{10.84}$$

$$\boldsymbol{\Phi}_N(0) = \boldsymbol{\Phi}_0^N, \tag{10.85}$$

where $\boldsymbol{F}_N$ is a suitable regularisation in time of $\boldsymbol{F}$ (with $\boldsymbol{F}_N \to \boldsymbol{F}$ in $L^2(0,T;\mathcal{V}')$), and $\boldsymbol{\Phi}_0^N = \boldsymbol{P}_N \boldsymbol{\Phi}_0$. Being equivalent to a Cauchy problem for an ordinary differential equation in a finite-dimensional space, the above problem

admits a unique solution for small enough T. Then, the energy bound (10.77) gives us

$$\|\boldsymbol{\Phi}_N(t)\|_{\mathcal{H}}^2 + \int_0^t \|\boldsymbol{\Phi}_N(s)\|_{\mathcal{V}}^2\, ds \le \|\boldsymbol{\Phi}_0^N\|_{\mathcal{H}}^2 + \int_0^t \|\boldsymbol{F}_N(s)\|_{\mathcal{V}'}^2\, ds,$$

which has two consequences. First, $\boldsymbol{\Phi}_N(t)$ remains bounded in $\mathcal{K}_N$ (all norms are equivalent in a finite-dimensional space), as long as the right-hand side is finite. By the usual theorems on ordinary differential equations, one deduces that the solution exists on any interval $(0,T)$ such that $\boldsymbol{F} \in L^2(0,T;\mathcal{V}')$. Second, one has the uniform bound:

$$\|\boldsymbol{\Phi}_N\|_{L^\infty(0,T;\mathcal{H})} + \|\boldsymbol{\Phi}_N\|_{L^2(0,T;\mathcal{V})} \le M,$$

where M will denote a generic constant depending only on the domain Ω, the existence time T, the parameters (η_u, η_B) and the data $\boldsymbol{\Phi}_0$ and $\boldsymbol{f}$. Using the imbedding $H^1(\Omega) \subset L^6(\Omega)$, one deduces other bounds on the non-linear term:

$$\|\mathtt{C}(\boldsymbol{\Phi}_N;\boldsymbol{\Phi}_N)\|_{L^2(0,T;\boldsymbol{L}^1(\Omega))} \le \|\boldsymbol{\Phi}_N\|_{L^\infty(0,T;\boldsymbol{L}^2(\Omega))}\, \|\nabla\boldsymbol{\Phi}_N\|_{L^2(0,T;\boldsymbol{L}^2(\Omega))} \le M,$$
$$\|\mathtt{C}(\boldsymbol{\Phi}_N;\boldsymbol{\Phi}_N)\|_{L^1(0,T;\boldsymbol{L}^{3/2}(\Omega))} \le \|\boldsymbol{\Phi}_N\|_{L^2(0,T;\boldsymbol{L}^6(\Omega))}\, \|\nabla\boldsymbol{\Phi}_N\|_{L^2(0,T;\boldsymbol{L}^2(\Omega))} \le M,$$

and by interpolation,

$$\|\mathtt{C}(\boldsymbol{\Phi}_N;\boldsymbol{\Phi}_N)\|_{L^{4/3}(0,T;\boldsymbol{L}^{6/5}(\Omega))} \le M. \tag{10.86}$$

On the other hand, using (10.83), one can derive another bound:

$$\|\mathtt{C}(\boldsymbol{\Phi}_N;\boldsymbol{\Phi}_N)\|_{L^{4/d}(0,T;\mathcal{K}')} \le M\,;$$

and rewriting the evolution equation (10.84) in operator form as

$$\boldsymbol{\Phi}_N'(t) + \mathtt{A}\boldsymbol{\Phi}_N(t) + \boldsymbol{P}_N^t\mathtt{C}(\boldsymbol{\Phi}_N(t);\boldsymbol{\Phi}_N(t)) = \boldsymbol{P}_N^t\boldsymbol{\Pi}_{\mathcal{K}}\boldsymbol{F}_N(t),$$

one can bound the time derivative as

$$\|\boldsymbol{\Phi}_N'\|_{L^{4/d}(0,T;\mathcal{K}')} \le M,$$

where d is the space dimension. Alternatively, this bound is a direct consequence of (10.86) if $d = 3$. Passing to the limit as N goes to infinity, one has some weak and weak-$*$ convergence results (up to subsequences):

$$\boldsymbol{\Phi}_N \rightharpoonup \boldsymbol{\Phi} \text{ in } L^2(0,T;\mathcal{K}),\ \ \boldsymbol{\Phi}_N \overset{*}{\rightharpoonup} \boldsymbol{\Phi} \text{ in } L^\infty(0,T;\mathcal{L}),$$
$$\boldsymbol{\Phi}_N' \rightharpoonup \boldsymbol{\Phi}' \text{ in } L^{4/d}(0,T;\mathcal{K}'),\ \ \mathtt{C}(\boldsymbol{\Phi}_N;\boldsymbol{\Phi}_N) \rightharpoonup \boldsymbol{G} \text{ in } L^{4/3}(0,T;\boldsymbol{L}^{6/5}(\Omega)).$$

The fact that the first two limits are identical, and the third is equal to their time derivative, is obvious by imbedding the spaces into $\mathcal{D}'(0,T;\mathcal{K}')$. On the other hand, we need some compactness result in order to prove $\boldsymbol{G} = \mathtt{C}(\boldsymbol{\Phi};\boldsymbol{\Phi})$. The following one is of very general use.

Theorem 10.2.4 (`Aubin [26]`, `Simon [192]`) *Let $B_0 \subset B_1 \subset B_2$ be Banach spaces such that the imbedding $B_0 \hookrightarrow B_1$ is* compact, *and the imbedding $B_1 \hookrightarrow B_2$ is* continuous. *For any $p,\ r \in [1, +\infty]$, let $E_{p,r}$ be the space*

$$E_{p,r} = \{w \in L^p(0,T;B_0) : w' \in L^r(0,T;B_2)\}\,.$$

1. *If $p < +\infty$, then $E_{p,r} \subset L^p(0,T;B_1)$, with compact imbedding;*
2. *If $p = +\infty$ and $r > 1$, then $E_{p,r} \subset C([0,T];B_1)$, with compact imbedding.*

Applying the theorem to $B_0 = \mathcal{K},\ B_1 = \mathcal{L},\ B_2 = \mathcal{K}'$, we see that

$$\boldsymbol{\Phi}_N \to \boldsymbol{\Phi} \text{ in } L^2(0,T;\mathcal{L}) \quad \text{(strongly)}.$$

But $\mathtt{C}$ is continuous as a bilinear operator from $L^2(0,T;\mathcal{L}) \times L^2(0,T;\mathcal{K})$ to $L^1(0,T;\boldsymbol{L}^1(\Omega))$. By a classical argument [62, Prop. II.1.12], one deduces that $\mathtt{C}(\boldsymbol{\Phi}_N;\boldsymbol{\Phi}_N) \rightharpoonup \mathtt{C}(\boldsymbol{\Phi};\boldsymbol{\Phi})$ in $L^1(0,T;\boldsymbol{L}^1(\Omega))$, i.e., $\boldsymbol{G} = \mathtt{C}(\boldsymbol{\Phi};\boldsymbol{\Phi})$.

To check that $\boldsymbol{\Phi}$ is a solution to (10.81)–(10.82), take any $\boldsymbol{\Psi} \in \mathcal{K}$ and set $\boldsymbol{\Psi}_N = \boldsymbol{P}_N\boldsymbol{\Psi}$. As $\boldsymbol{\Psi}_N \to \boldsymbol{\Psi}$ strongly in $\mathcal{K}$ while $\boldsymbol{\Phi}_N \rightharpoonup \boldsymbol{\Phi}$, $\boldsymbol{\Phi}'_N \rightharpoonup \boldsymbol{\Phi}'$, $\mathtt{C}(\boldsymbol{\Phi}_N;\boldsymbol{\Phi}_N) \rightharpoonup \mathtt{C}(\boldsymbol{\Phi};\boldsymbol{\Phi})$ in the suitable spaces, it is possible [63, Prop. 3.5], [78, Theorem 5.12-4] to pass to the limit in (10.84), giving (10.81); checking the initial condition is not difficult.

Uniqueness of solutions and energy conservation appear strongly linked. Roughly speaking, to derive (10.76), one has to assume that $\boldsymbol{\Phi}$ and $\boldsymbol{\Phi}'$ belong to dual spaces. In two dimensions, this is the case, as $\boldsymbol{\Phi}' \in L^2(0,T;\mathcal{K}')$ and $\boldsymbol{\Phi} \in L^2(0,T;\mathcal{K})$. Similarly, consider two solutions $\boldsymbol{\Phi}_1,\ \boldsymbol{\Phi}_2$ to (10.69)–(10.71), and let $\boldsymbol{\Phi} := \boldsymbol{\Phi}_1 - \boldsymbol{\Phi}_2$. If one writes two copies of the system (10.69)–(10.71) with the respective unknowns $\boldsymbol{\Phi}_1$ and $\boldsymbol{\Phi}_2$, subtracts them, and takes the test function $\boldsymbol{\Psi} = \boldsymbol{\Phi}(t)$, one finds, after some manipulations,

$$\frac{1}{2}\,\|\boldsymbol{\Phi}(t)\|^2_{\mathcal{H}} + \int_0^t \|\boldsymbol{\Phi}(s)\|^2_{\mathcal{V}}\,ds + \int_0^t c(\boldsymbol{\Phi}(s);\boldsymbol{\Phi}_2(s),\boldsymbol{\Phi}(s))\,ds = \frac{1}{2}\,\|\boldsymbol{\Phi}(0)\|^2_{\mathcal{H}}.$$

Then, ones uses the bound (10.74) and the Young inequality to derive

$$\|\boldsymbol{\Phi}(t)\|^2_{\mathcal{H}} \le \|\boldsymbol{\Phi}(0)\|^2_{\mathcal{H}} + C\int_0^t \|\boldsymbol{\Phi}_2(s)\|^2_{\mathcal{V}}\,\|\boldsymbol{\Phi}(s)\|^2_{\mathcal{H}}\,ds.$$

But $\boldsymbol{\Phi}(0) = \boldsymbol{\Phi}_1(0) - \boldsymbol{\Phi}_2(0) = 0$; a generalized version of Gronwall's Lemma [62, Lemma II.4.8] allows one to conclude that $\|\boldsymbol{\Phi}(t)\|^2_{\mathcal{H}} = 0$ for all t.

All these arguments break down in three dimensions, as it only holds that $\boldsymbol{\Phi}' \in L^{4/3}(0,T;\mathcal{K}')$. Nevertheless, the well-known property of weak convergence (if $\boldsymbol{\Phi}_N \rightharpoonup \boldsymbol{\Phi}$ in some space, then $\|\boldsymbol{\Phi}\| \le \liminf \|\boldsymbol{\Phi}_N\|$, see [63, Prop. 3.5] or [78, Theorem 5.12-2]) implies the energy inequality (10.80). On the other hand, if there is a solution $\boldsymbol{\Phi} \in L^4(0,T;\mathcal{K})$, then $\boldsymbol{\Phi}$ and $\boldsymbol{\Phi}'$ *do* belong to dual spaces, so energy conservation holds as expected and the solution is unique within this class. There is even a stronger result [62, Theorem IV.2.7]: if there exist a solution in $L^4(0,T;\mathcal{K})$ and another solution that satisfies the energy equality (10.76) for $t < T$, they coincide on $(0,T)$.

The existence and regularity of the Lagrange multiplier P is proved as usual (see, e.g., Theorem 4.3.19); the other statements of Theorem 10.2.2 are proved using techniques similar to the above. The proof of Theorem 10.2.3 rests on estimates obtained by taking the test function $\boldsymbol{\Psi} = \mathtt{A}\boldsymbol{\Phi}(t)$ in (10.81); uniqueness in 3D follows from the above discussion.

References

1. **S. Abarbanel and D. Gottlieb**, A mathematical analysis of the PML method, *J. Comput. Phys.*, **134**, 357–363 (1997).
2. **S. Abarbanel, D. Gottlieb, J.S. Hestaven**, Non-linear PML equations for time-dependent electromagnetics in three dimensions, *J. Sci. Comput.*, **28**, 125–137 (2006).
3. **R.A. Adams**, *Sobolev spaces*, Academic Press, New York (1975).
4. **R.A. Adams, J.J.F. Fournier**, *Sobolev spaces. Second edition*, Academic Press, New York (2003).
5. **A. Alonso, A. Valli**, Some remarks on the characterization of the space of tangential traces of $H(\mathbf{rot};\Omega)$ and the construction of an extension operator, *Manuscripta Math.*, **89**, 159–178 (1996).
6. **A. Alonso Rodriguez, A. Valli**, Voltage and current excitation for time-harmonic eddy-current problems, *SIAM J. Appl. Math.*, **68**, 1477–1494 (2008).
7. **J.J. Ambrosiano, S.T. Brandon, E. Sonnendrücker**, A finite element formulation of the Darwin PIC model for use on unstructured grids, *J. Comput. Phys.*, **121**, 281–297 (1995).
8. **G. Amendola**, On the asymptotic behavior for an electromagnetic system with a dissipative boundary condition, *IMA Journal of Applied Mathematics*, **70**, 270–292 (2005).
9. **C. Amrouche**, `Private communication` (2011).
10. **C. Amrouche, C. Bernardi, M. Dauge, V. Girault**, Vector potentials in three-dimensional non-smooth domains, *Math. Meth. Appl. Sci.*, **21**, 823–864 (1998).
11. **X. Antoine, H. Barucq, A. Bendali**, Bayliss-Turkell-like radiation conditions on surfaces of arbitrary shape, *J. Math. Anal. Appl.*, **229**, 184–211 (1999).
12. **A.A. Arseneev**, Local uniqueness and existence of classical solution of Vlasov's system of equations, *Soviet. Math, Dokl.*, **15**, 1223–1225 (1974).
13. **A.A. Arseneev**, Global existence of a weak solution of Vlasov's system of equations, *U.S.S.R. Comput. Math. and Math. Phys.*, **15**, 131–143 (1975).
14. **F. Assous, P. Ciarlet, Jr.**, Modèles et méthodes pour les équations de Maxwell, Graduate course, Versailles - Saint-Quentin-en-Yvelines University, France (2003). (in French)

15. **F. Assous, P. Ciarlet, Jr., E. Garcia**, Résolution des équations de Maxwell instationnaires avec charges dans un domaine singulier bidimensionnel, *C. R. Acad. Sci. Paris, Ser. I*, **330**, 391–396 (2000).
16. **F. Assous, P. Ciarlet, Jr., E. Garcia, J. Segré**, Time-dependent Maxwell's equations with charges in singular geometries, *Comput. Methods Appl. Mech. Engrg*, **196**, 665–681 (2006).
17. **F. Assous, P. Ciarlet, Jr., S. Labrunie**, Theoretical tools to solve the axisymmetric Maxwell equations, *Math. Meth. Appl. Sci.*, **25**, 49–78 (2002).
18. **F. Assous, P. Ciarlet, Jr., S. Labrunie**, Solution of axisymmetric Maxwell equations, *Math. Meth. Appl. Sci.*, **26**, 861–896 (2003).
19. **F. Assous, P. Ciarlet, Jr., S. Labrunie**, *Computational electromagnetism in complex geometries*, In preparation.
20. **F. Assous, P. Ciarlet, Jr., S. Labrunie, J. Segré**, Numerical solution to the time-dependent Maxwell equations in axisymmetric singular domains: the singular complement method, *J. Comput. Phys.*, **191**, 147–176 (2003).
21. **F. Assous, P. Ciarlet Jr., J. Segré**, Numerical solution to the time-dependent Maxwell equations in two-dimensional singular domain: the singular complement method, *J. Comput. Phys.* **161**, 218–249 (2000).
22. **F. Assous, P. Ciarlet, Jr., E. Sonnendrücker**, Resolution of the Maxwell equations in a domain with reentrant corners, *Modél. Math. Anal. Numér.*, **32**, 359–389 (1998).
23. **F. Assous, P. Degond, E. Heintzé, P.-A. Raviart, J. Segré**, On a finite element method for solving the three-dimensional Maxwell equations, *J. Comput. Phys.*, **109**, 222–237 (1993).
24. **F. Assous, F. Tsipis**, A PIC method for solving a paraxial model of highly relativistic beams, *J. Comput. Appl. Math.*, **227**, 136-146 (2008).
25. **F.V. Atkinson**, On Sommerfeld's Radiation Condition, *Philos. Mag.*, **40**, 645–651 (1949).
26. **T. Aubin**, Un théorème de compacité, *C. R. Acad. Sci. Paris* **256**, 5042–5044 (1963).
27. **I. Babuska**, The finite element method with Lagrange multipliers, *Numer. Math.*, **20**, 179–192 (1973).
28. **A. Bachelot, V. Lange**, Time dependent integral method for Maxwell's equations with impedance boundary condition, in *Boundary element technology*, **10**, Eds. C.A. Brebbia, M.H. Aliabadah, Wessex Institute of Technology, Southampton, pp. 137–144 (1995).
29. **A. Back, T. Hattori, S. Labrunie, J.R. Roche, P. Bertrand**, Electromagnetic wave propagation and absorption in magnetised plasmas: variational formulations and domain decomposition, *Math. Model. Numer. Anal.*, **49**, 1239–1260 (2015).
30. **C. Bardos, P. Degond**, Existence globale et comportement asymptotique de l'équation de Vlasov–Poisson, *C. R. Acad. Sc. Paris, Ser I*, **297**, 321–324 (1983).
31. **R. Barthelmé**, Le problème de conservation de la charge dans le couplage des équations de Vlasov et de Maxwell, PhD Thesis, Strasbourg 1 University, France (2005). (in French)
32. **R. Barthelmé, P. Ciarlet, Jr., E. Sonnendrücker**, Generalized formulations of Maxwell's equations for numerical Vlasov–Maxwell simulations, *Math. Models Meth. App. Sci.*, **17**, 657–680 (2007).

33. **H. Barucq, M. Fontes**, Well-posedness and exponential stability of Maxwell-like systems coupled with strongly absorbing layers, *J. Math. Pures Appl.*, **87**, 253–273 (2007).
34. **H. Barucq, B. Hanouzet**, Asymptotic behavior of solutions to Maxwell's system in bounded domains with absorbing Silver-Müller's condition on the exterior boundary, *Asymptotic Analysis*, **15**, 25–40 (1997).
35. **R. Beals, V. Protopopescu**, Abstract time-dependent transport equations, *J. Math. Anal. Appl.*, **121**, 370–405 (1987).
36. **E. Bécache, S. Fauqueux, P. Joly**, Stability of perfectly matched layers, group velocities and anisotropic waves, *J. Comput. Phys.*, **188**, 399–433 (2003).
37. **E. Bécache, P. Joly**, On the analysis of Bérenger's perfectly matched layers for Maxwell's equations, *Math. Model. Numer. Anal.*, **36**, 87–119 (2002).
38. **S. Benachour, F. Filbet, P. Laurençot, E. Sonnendrücker**, Global existence for the Vlasov–Darwin system in $\mathbb{R}^3$ for small initial data, *Math. Meth. Appl. Sci.*, **26**, 297–319 (2003).
39. **A. Bendali, P. Guillaume**, Non-reflecting boundary conditions for waveguides, *Math. Comp.*, **68**, 123–144 (1999).
40. **A. Bendali, L. Halpern**, Conditions aux limites absorbantes pour le système de Maxwell dans le vide en dimension 3, *C. R. Acad. Sci. Paris, Ser. I*, **307**, 1011–1013 (1988).
41. **J.-P. Bérenger**, A perfectly matched layer for the absorption of electromagnetic waves, *J. Comput. Phys.*, **114**, 185–200 (1994).
42. **J.-P. Bérenger**, Three-dimensional perfectly matched layer for the absorption of electromagnetic waves, *J. Comput. Phys.*, **127**, 363–379 (1996).
43. **A.J. Berkhout**, *Seismic migration*, Elsevier, Amsterdam, Oxford, New York, Tokyo (1984).
44. **C. Bernardi, M. Dauge, Y. Maday**, Polynomials in weighted Sobolev spaces: basics and trace liftings. Internal Report 92039, Laboratoire d'analyse numérique, Université Pierre et Marie Curie, 1992.
45. **C. Bernardi, M. Dauge, Y. Maday**, *Spectral methods for axisymmetric domains*, Series in Applied Mathematics, Gauthier-Villars, Paris and North Holland, Amsterdam (1999).
46. **C. Bernardi, M. Dauge, Y. Maday**, Compatibility of traces on the edges and corners of a polyhedron, *C. R. Acad. Sci. Paris, Ser. I*, **331**, 679–684 (2000).
47. **C.K. Birdsall, A.B. Langdon**, *Plasmas physics via computer simulation*, Mac Graw-Hill, New York (1985).
48. **M.Sh. Birman, M.Z. Solomyak**, L^2-Theory of the Maxwell operator in arbitrary domains, *Russian Math. Surveys*, **42**, 75-96 (1987).
49. **M.Sh. Birman, M.Z. Solomyak**, Maxwell operator in regions with nonsmooth boundaries, *Sib. Math. J.*, **28**, 12–24 (1987).
50. **M.Sh. Birman, M.Z. Solomyak**, Construction in a piecewise smooth domain of a function of the class H^2 from the value of the conormal derivative, *J. Sov. Math.*, **49**, 1128-1136 (1990).
51. **D. Boffi, F. Brezzi, L. Gastaldi**, On the convergence of eigenvalues for mixed formulations, *Annali Sc. Norm. Sup. Pisa Cl. Sci.*, **25**, 131–154 (1997).
52. **V.A. Bokil, M.W. Buksas**, Comparison of finite difference and mixed finite element methods for perfectly matched layer models, *Commun. Comput. Phys.*, **2**, 806–826 (2007).

53. **A. Bonito, J.-L. Guermond, F. Luddens**, Regularity of the Maxwell equations in heterogeneous media and Lipschitz domains, *J. Math. Anal. Appl.*, **408**, 498–512 (2013).
54. **A.-S. Bonnet-Ben Dhia, L. Chesnel, P. Ciarlet, Jr.**, T-coercivity for scalar interface problems between dielectrics and metamaterials, *Math. Mod. Num. Anal.*, **46**, 1363–1387 (2012).
55. **A.-S. Bonnet-Ben Dhia, L. Chesnel, P. Ciarlet, Jr.**, Two-dimensional Maxwell's equations with sign-changing coefficients, *Applied Numerical Mathematics*, **79**, 29–41 (2014).
56. **A.-S. Bonnet-Ben Dhia, L. Chesnel, P. Ciarlet, Jr.**, T-coercivity for the Maxwell problem with sign-changing coefficients, *Communications in Partial Differential Equations*, **39**, 1007–1031 (2014).
57. **A.-S. Bonnet-Ben Dhia, P. Ciarlet, Jr., C. M. Zwölf**, Time harmonic wave diffraction problems in materials with sign-shifting coefficients, *J. Comput. Appl. Math.*, **234**, 1912–1919 (2010). (Corrigendum *J. Comput. Appl. Math.*, **234**, 2616 (2010))
58. **M. Bostan**, Weak solutions for the Vlasov-Poisson initial-boundary value problem with bounded electric field, *Chin. Ann. Math. Ser. B* **28**, 389–420 (2007).
59. **F. Bouchut, F. Golse, M. Pulvirenti**, *Kinetic equations and asymptotic theory*, Gauthier-Villars, Series in Applied Mathematics (2000).
60. **A. de la Bourdonnaye**, Décomposition de $H_{div}^{-1/2}(\Gamma)$ et nature de l'opérateur de Steklov-Poincaré du problème extérieur de l'électromagnétisme, *C. R. Acad. Sci. Paris, Ser. I*, **316**, 369–372 (1993).
61. **J. Bourgain, H. Brezis, P. Mironescu**, Another look at Sobolev spaces, in *Optimal control and partial differential equations*, Eds. J.L. Menaldi *et al*, IOP Press, pp. 439–455 (2001).
62. **F. Boyer, P. Fabrie**, *Eléments d'analyse pour l'étude de quelques modèles d'écoulements de fluides visqueux incompressibles*, Mathématiques & Applications **52**, Springer, Berlin/Heidelberg/New York (2006).
63. **H. Brezis**, *Analyse fonctionnelle. Théorie et applications*, Masson, Paris (1983). *Functional analysis, Sobolev spaces and Partial Differential Equations*, Universitext, Springer (2011).
64. **F. Brezzi**, On the existence, uniqueness and approximation of saddle point problems arising from Lagrange multipliers, *R.A.I.R.O. Anal. Numér.*, **R2**, 129–151 (1974).
65. **F. Brezzi, M. Fortin**, *Mixed and hybrid finite element methods*, Springer Verlag, New York (1991).
66. **A. Buffa**, Hodge decompositions on the boundary of nonsmooth domains: the multi-connected case, *Math. Models Meth. App. Sci.*, **11**, 147–176 (2001).
67. **A. Buffa, P. Ciarlet, Jr.**, On traces for functional spaces related to Maxwell's equations. Part I: an integration by parts formula in Lipschitz polyhedra, *Math. Meth. Appl. Sci.*, **24**, 9–30 (2001).
68. **A. Buffa, P. Ciarlet, Jr.**, On traces for functional spaces related to Maxwell's equations. Part II: Hodge decompositions on the boundary of Lipschitz polyhedra and applications, *Math. Meth. Appl. Sci.*, **24**, 31–48 (2001).
69. **A. Buffa, M. Costabel, C. Schwab**, Boundary element methods for Maxwell's equations on non-smooth domains, *Numer. Math.*, **92**, 679–710 (2002).

70. **A. Buffa, M. Costabel, D. Sheen**, On traces for $H(\mathbf{curl}, \Omega)$ in Lipschitz domains, *J. Math. Anal. Appl.*, **276**, 845–867 (2002).
71. **M. Cassier**, Etude de deux problèmes de propagation d'ondes transitoires. 1) Focalisation spatio-temporelle en acoustique. 2) Transmission entre un diélectrique et un méta-matériau, PhD Thesis, Ecole Polytechnique, France (2014). (in French)
72. **M. Cassier, P. Joly, M. Kachanovska**, Mathematical models for dispersive electromagnetic waves: an overview, ArXiv Report arXiv:1703.05178v1 (2017).
73. **M. Cessenat**, *Mathematical methods in electromagnetism. Linear theory and applications*, Advances in Mathematics for Applied Sciences, **41**, World Scientific, Singapore (1996).
74. **F.F. Chen**, *Introduction to Plasma Physics*, Plenum Press, New York, London (1974).
75. **L. Chesnel, P. Ciarlet, Jr.**, T-coercivity and continuous Galerkin methods: application to transmission problems with sign changing coefficients, *Numer. Math.*, **124**, 1–29 (2013).
76. **W.C. Chew, W.H. Weedon**, A 3D perfectly matched medium from modified Maxwell's equations with stretched coordinates, *Microwave Opt. Technol. Lett.*, **7**, 599–604 (1994).
77. **S.H. Christiansen, R. Winther**, On variational eigenvalue approximation of semidefinite operators, *IMA J. Numer. Anal.*, **33**, 164–189 (2013).
78. **P.G. Ciarlet**, *Linear and nonlinear functional analysis with applications*, SIAM, Philadelphia (2013).
79. **P.G. Ciarlet, P. Ciarlet, Jr.**, Another approach to linearized elasticity and Korn's inequality, *C. R. Acad. Sci. Paris, Ser. I*, **339**, 307–312 (2004).
80. **P. Ciarlet, Jr.**, On the approximation of electromagnetic fields by edge finite elements. Part 1: sharp interpolation results for low-regularity fields, *Computers Math. Applic.*, **71**, 85–104 (2016).
81. **P. Ciarlet, Jr., E. Garcia, J. Zou**, Solving Maxwell equations in 3D prismatic domains, *C. R. Acad. Sci. Paris, Ser. I*, **339**, 721–726 (2004).
82. **P. Ciarlet, Jr., S. Labrunie**, Numerical analysis of the generalized Maxwell equations (with an elliptic correction) for charged particle simulations, *Math. Models Meth. App. Sci.*, **19**, 1959–1994 (2009).
83. **P. Ciarlet, Jr., S. Labrunie**, Numerical solution of Maxwell's equations in axisymmetric domains with the Fourier Singular Complement Method. *Differential Equations and Applications*, **3**, 113–155 (2011).
84. **P. Ciarlet, Jr., E. Sonnendrücker**, A decomposition of the electric field. Application to the Darwin model, *Math. Meth. Appl. Sci.*, **7**, 8, 1085–1120 (1997).
85. **P. Ciarlet, Jr., J. Zou**, Finite element convergence for the Darwin model to Maxwell's equations, *Modél. Math. Anal. Numér.*, **31**, 213–250 (1997).
86. **J.F. Claerbout**, *Imaging the Earth's interior*, Blackwell Scientific Publications, Oxford (1985).
87. **D. Colton, R. Kress**, *Inverse acoustic and electromagnetic theory*, Springer-Verlag, Berlin (1998).
88. **M. Costabel**, A remark on the regularity of solutions of Maxwell's equations on Lipschitz domains, *Math. Meth. Appl. Sci.*, **12**, 365-368 (1990).
89. **M. Costabel, M. Dauge**, Singularities of electromagnetic fields in polyhedral domains, *Arch. Rational Mech. Anal.*, **151**, 221-276 (2000).

90. **M. Costabel, M. Dauge, S. Nicaise**, Singularities of Maxwell interface problems, *Modél. Math. Anal. Numér.*, **33**, 627–649 (1999).
91. **C.G. Darwin**, The dynamical motion of particles, *Phil. Mag.*, **39**, 537–551 (1920).
92. **M. Dauge**, *Elliptic boundary value problems on corner domains*, Lecture Notes in Mathematics, **1341**, Springer Verlag, Berlin (1988).
93. **R. Dautray, J.-L. Lions**, *Analyse mathématique et calcul numérique pour les sciences et les techniques*, Masson, Paris (1987).
94. **R. Dautray, J.-L. Lions**, *Mathematical analysis and numerical methods for science and technology*, Springer-Verlag, Berlin (1990).
95. **P.A. Davidson**, *An introduction to magnetohydrodynamics*, Cambridge University Press, Cambridge (2001).
96. **P. Degond**, Local existence of the solutions of the Vlasov-Maxwell equations and convergence to the Vlasov-Poisson equations for infinite light velocity, *Math. Meth. Appl. Sci.*, **8**, 533–558 (1986).
97. **P. Degond, P.-A. Raviart**, An analysis of the Darwin model of approximation to Maxwell's equations, *Forum Math.*, **4**, 13–44 (1992).
98. **B. Després, L.M. Imbert-Gérard, R. Weder**, Hybrid resonance of Maxwell's equations in slab geometry, *J. Math. Pures Appl.*, **101**, 623–659 (2014).
99. **L. Desvillettes**, Quelques outils d'analyse pour les équations de Vlasov et de Landau, in *Ecole CEA-EDF-INRIA, Equations cinétiques et applications à la physique* (2005).
100. **J. Diaz, P. Joly**, An analysis of higher order boundary conditions for the wave equation, *SIAM J. Appl. Math.*, **65**, 1547–1575 (2005).
101. **R.J. DiPerna, P.-L. Lions**, Solutions globales d'équations du type Vlasov–Poisson, *C. R. Acad. Sci. Paris Sér. I*, **307**, 655–658 (1988).
102. **R.J. DiPerna, P.-L. Lions**, Global weak solutions of Vlasov-Maxwell systems, *Comm. Pure Appl. Math.*, **42**, 729–757 (1989).
103. **R.J. DiPerna, P.-L. Lions**, Ordinary differential equations, transport theory and Sobolev spaces *Invent. Math.*, **98**, 511–547 (1989).
104. **E. Durand**, *Electrostatique*, Masson, Paris (1964).
105. **D.M. Eidus**, The principle of limiting absorption, *Russian Math. Surveys*, **24**, 97–167 (1969).
106. **B. Engquist, A. Majda**, Absorbing boundary conditions for acoustic and elastic wave equations, *Math. Comp.*, **31**, 629–651 (1977).
107. **M. Fabrizio and A. Morro**, *Electromagnetism of continuous media*, Oxford University Press (2003).
108. **N. Fang, L.-A. Ying**, Three-dimensional exterior problem of Darwin model and its numerical computation, *Math. Models Meth. App. Sci.*, **18**, 1673–1701 (2008).
109. **X. Feng**, Absorbing boundary conditions for electromagnetic wave propagation, *Math. Comp.*, **68**, 145–168 (1999).
110. **P. Fernandes, G. Gilardi**, Magnetostatic and electrostatic problems in inhomogeneous anisotropic media with irregular boundary and mixed boundary conditions, *Math. Models Meth. App. Sci.*, **7**, 957–991 (1997).
111. **R. Feynman, Leighton, Sands**, *The Feynman lectures on physics: electromagnetism*, Addison-Wesley, Reading (1964).
112. **E. Gagliardo**, Caratterizzazioni delle tracce sulla frontiera relative ad alcune classi di funzioni in n variabili, *Rend. Sem. Mat. di Padova*, **27**, 284–305 (1957).

113. **E. Garcia**, Résolution des équations de Maxwell instationnaires avec charges dans des domaines non convexes, PhD Thesis, Paris 6 University, France (2002). (in French)
114. **E. Garcia, S. Labrunie**, Régularité spatio-temporelle de la solution des équations de Maxwell dans des domaines non convexes, *C. R. Acad. Sci. Paris, Ser. I*, **334**, 293–298 (2002).
115. **J. Garsoux**, *Espaces vectoriels topologiques et distributions*, Dunod, Paris (1963).
116. **S.D. Gedney**, An anisotropic perfectly-matched layer absorbing medium for the truncation of FT-TD lattices, *IEEE Trans. Antennas Propagat.*, **44**, 1630–1639 (1996).
117. **S.D. Gedney**, The perfectly matched layer absorbing medium, in *Advances in Computational Electrodynamics*, Ed. A. Taflove, Artech House, pp. 263–344 (1998).
118. **V. Girault, P.-A. Raviart**, *Finite element methods for Navier-Stokes equations*, Springer Series in Computational Mathematics, **5**, Springer Verlag, Berlin (1986).
119. **D. Givoli**, A spatially exact non-reflecting boundary condition for time dependent problems, *Comput. Methods Appl. Mech. Engrg.*, **95**, 97–113 (1992).
120. **R.T. Glassey, J. Schaeffer**, The one and one-half dimensional relativistic Vlasov–Maxwell system, *Math. Meth. Appl. Sci.*, **13**, 169–179 (1990).
121. **R.T. Glassey, J. Schaeffer**, The two and one-half dimensional relativistic Vlasov–Maxwell system, *Comm. Math. Phys.*, **185**, 257–284 (1997).
122. **R.T. Glassey, J. Schaeffer**, The relativistic Vlasov–Maxwell system in two space dimensions: Parts I & II, *Arch. Rat. Mech. Anal.*, **141**, 331–354 & 355–374 (1998).
123. **R.T. Glassey, W. Strauss**, Singularity formation in a colisionless plasma could only occur at high velocities, *Arch. Rat. Mech. Anal.*, **92**, 56–90 (1986).
124. **P. Grisvard**, Théorèmes de traces relatifs à un polyèdre, *C. R. Acad. Sci. Paris, Ser. I*, **278**, 1581–1583 (1974).
125. **P. Grisvard**, *Elliptic problems in nonsmooth domains*, Monographs and Studies in Mathematics, 24, Pitman, London (1985).
126. **P. Grisvard**, *Singularities in boundary value problems*, RMA **22**, Masson, Paris (1992).
127. **P.W. Gross, P.R. Kotiuga**, A challenge for magnetic scalar potential formulations of 3-D eddy current problems: multiply connected cuts in multiply connected regions which necessarily leave the cut complement multiply connected, in *Electric and magnetic fields*, Eds. A. Nicolet, R. Belmans, Plenum Press, New York, pp. 1–20 (1995).
128. **P.W. Gross, P.R. Kotiuga**, *Electromagnetic theory and computation: a topological approach*, MSRI Publications Series, Cambridge University Press, Cambridge (2004).
129. **M.J. Grote, J.B. Keller**, On nonreflecting boundary conditions, *J. Comput. Phys.*, **122**, 231–243 (1995).
130. **Y. Guo**, Global weak solutions of the Vlasov-Maxwell system with boundary conditions, *Commun. Math. Phys.*, **154**, 245–263 (1993).
131. **Y. Guo**, Regularity for the Vlasov equations in a half-space, *Indiana University Mathematics Journal*, **43**, 255–320 (1994).

132. **T. Hagstrom, A. Mar-Or and D. Givoli**, High-order local absorbing conditions for the wave equation: extensions and improvements, *J. Comput. Phys.*, **227**, 3322–3357 (2007).
133. **J.K. Hale**, *Ordinary differential equations, Second edition*, Krieger Publishing Company, Malabar, Florida, 1980.
134. **C. Hazard**, Analyse modale de la propagation des ondes, Habilitation, Paris 6 University, France (2001). (in French)
135. **C. Hazard, M. Lenoir**, On the solution of time-harmonic scattering problems for Maxwell's equations, *SIAM J. Math. Anal.*, **27**, 1597–1630 (1996).
136. **E. Horst**, On the classical solutions of the initial value problem for the unmodified nonlinear Vlasov Equations. I: General theory. *Math. Methods Appl. Sci.*, **3**, 229–248 (1981). II: Special cases. *Math. Methods Appl. Sci.*, **4**, 19–32 (1982).
137. **E. Horst, R. Hunze**, Weak solutions of the initial value problem for the unmodified nonlinear Vlasov equation. *Math. Methods Appl. Sci.*, **6**, 262–279 (1984).
138. **H.J. Hwang**, Regularity for the Vlasov–Poisson system in a convex domain, *SIAM J. Math. Anal.*, **36**, 121–171 (2004).
139. **H.J. Hwang, J.J.L. Velázquez**, Global existence for the Vlasov–Poisson system in bounded domains, *Arch. Ration. Mech. Anal.*, **195**, 763–796 (2010).
140. **A.D. Ioannidis, G. Kristensson and I.G. Stratis**, On the well-posedness of the Maxwell system for linear bianisotropic media, *SIAM J. Math. Anal.*, **44**, 2459–2473 (2012).
141. **A.D. Ioannidis, I.G. Stratis, A. Yannacopoulos**, Electromagnetic wave propagation in dispersive bianisotropic media, in *Proc. of the 6th Int. Workshop on Advances in Scattering and Biomedical Engineering*, Eds. D. Fotiadis et al, World Scientific, pp. 295–304 (2003).
142. **J.D. Jackson**, *Classical electrodynamics, Third Edition*, John Wiley & Sons, New York (1999).
143. **B. Jensen**, *The quantum extension of the Drude-Zener theory in polar semiconductors*, in Handbook of optical constants of solids, Ed. E.D. Palik, Academic Press, pp. 169-188 New York (1998).
144. **D.S. Jerison, C.E. Kenig**, The Neumann problem on Lipschitz domains, *Bull. Amer. Math. Soc.*, **4**, 203–207 (1981).
145. **P. Joly**, *Analyse et approximation de modèles de propagation d'ondes. Partie I: analyse mathématique*, Cours de 3e année, Editions ENSTA, Paris (2001). (in French)
146. **P. Joly**, *Introduction à l'analyse mathématique de la propagation d'ondes en régime harmonique*, Cours de Master 2 Mathématiques et Applications, Paris 6 University (2007). (in French)
147. **P. Joly**, An elementary introduction to the construction and the analysis of perfectly matched layers for time domain wave propagation, *SeMA J.*, **57**, 5-48 (2012).
148. **P. Joly, B. Mercier**, Une nouvelle condition transparente d'ordre 2 pour les équations de Maxwell en dimension 3, *Technical Report INRIA*, **1047** (1989).
149. **D.S. Jones**, *Methods in electromagnetic wave propagation*, Clarendon Press, Oxford (1998).
150. **A. Karlsson, G. Kristensson**, Constitutive relations, dissipation and reciprocity for the Maxwell equations in the time domain, Technical

Report (Revision No. 2: August 1999) Lund Institute of Technology, CODEN:LUTEDX/(TEAT-7005)/1-36/(1989), Lund (1999).
151. **S. Klainerman, G. Staffilani**, A new approach to study the Vlasov-Maxwell system, *Commun. Pure Appl. Anal.*, **1**, 103–125 (2002).
152. **N.A. Krall, A.W. Trivelpiece**, *Principles of Plasma Physics*, McGraw-Hill, New York (1973).
153. **A. Lakhtakia, V.K. Varadan, V.V. Varadan**, *Time-harmonic electromagnetic fields in chiral media*, Lecture Notes in Physics, Springer-Verlag, Berlin (1989).
154. **G. Laval**, *Matière et rayonnement*, Ecole Polytechnique, Palaiseau (1986).
155. **J. Leray**, Essai sur les mouvements plans d'un liquide visqueux que limitent des parois, *J. Math. Pures Appl.*, **13**, 331–418 (1934).
156. **A.E. Lifschitz**, *Magnetohydrodynamics and spectral theory*, Kluwer Academic Publishers (1989).
157. **I. Lindell, A. Shivola, S. Tertyakov, A. Viitanen**, *Electromagnetic waves in chiral and bi-isotropic media*, Artech House, Boston (1994).
158. **J.-L. Lions, E. Magenes**, *Problèmes aux limites non homogènes et applications*, Vol. 1, Dunod, Paris (1968).
159. **P.-L. Lions, B. Perthame**, Propagation of moments and regularity for the 3-dimensional Vlasov–Poisson system, *Invent. Math.*, **105**, 415–430 (1991).
160. **G. Loeper**, Uniqueness of the solution to the Vlasov–Poisson system with bounded density, *J. Math. Pures Appl.*, **86** 68–79 (2006).
161. **S. Lohrengel**, Etude mathématique et résolution numérique des équations de Maxwell dans un domaine non régulier, PhD Thesis, Paris 6 University, France (1998). (in French)
162. **S.A. Maier**, *Plasmonics: fundamentals and applications*, Springer (2007).
163. **B. Mercier, G. Raugel**, Résolution d'un problème aux limites dans un ouvert axisymétrique par éléments finis en r, z et séries de Fourier en θ, *RAIRO Anal. Numer.*, **16**, 405–461 (1982).
164. **E.E. Moise**, *Geometric Topology in Dimensions 2 and 3*, Springer-Verlag, New York (1977).
165. **P. Monk**, *Finite element methods for Maxwell's equations*, Oxford University Press, 2003.
166. **C. Müller**, *Foundations of the mathematical theory of electromagnetic waves*, Springer Verlag, Berlin (1969).
167. **J. Nečas**, *Les méthodes directes en théorie des équations elliptiques*, Masson, Paris (1967).
168. **J.-C. Nédélec**, *Acoustic and electromagnetic equations*, Applied Mathematical Sciences, **144**, Springer, New York (2001).
169. **S. Nicaise, J. Venel**, A posteriori error estimates for a finite element approximation of transmission problems with sign changing coefficients, *J. Comput. Appl. Math.*, **235**, 4272–4282 (2011).
170. **H.M. Nussenzveig**, *Causality and dispersion relations*, Academic Press, New York (1972).
171. **T. Okaji**, Strong unique continuation property for time harmonic Maxwell equations, *J. Math. Soc. Japan*, **54**, 89–122 (2002).
172. **J.E. Osborn**, Spectral approximation for compact operators, *Math. Comp.*, **29**, 712–725 (1975).
173. **A. Pazy**, *Semigroups of linear operators and applications to partial differential equations*, Springer Verlag (1983).

174. **K.D. Phung**, Controllability and stabilization of electromagnetic waves, *ESAIM Control Optim. Calc. Var.*, **5**, 87–137 (2000).
175. **F. Poupaud, M. Remaki**, Existence et unicité des solutions du système de Maxwell pour des milieux hétérogènes non réguliers, *C. R. Acad. Sci. Paris, Ser. I*, **330**, 99–103 (2000).
176. **C. Rappaport**, Perfectly matched absorbing boundary conditions based on anisotropic lossy mapping of space, *IEEE Microwave Guided Wave Lett.*, **5**, 90–92 (1995).
177. **P.-A. Raviart, E. Sonnendrücker**, Approximate models for the Maxwell equations, *J. Comput. Appl. Math.*, **63**, 69–81 (1995).
178. **P.-A. Raviart, E. Sonnendrücker**, A hierarchy of approximate models for the Maxwell equations, *Numer. Math.*, **73**, 329–372 (1996).
179. **P.-A. Raviart, J.-M. Thomas**, *Introduction à l'analyse numérique des équations aux dérivées partielles*, Masson, Paris (1983).
180. **G. Rein**, Global weak solutions to the relativistic Vlasov–Maxwell system revisited, *Comm. Math. Sci.*, **2**, 145–158 (2004).
181. **M. Remaki**, Méthodes numériques pour les équations de Maxwell instationnaires en milieu hétérogène, PhD Thesis, Ecole des Ponts et Chaussées, Paris, France (1999). (in French)
182. **G.F. Roach, I.G. Stratis and A.N. Yannacopoulos**, *Mathematical analysis of deterministic and stochastic problems in complex media electromagnetics*, Princeton University Press (2012).
183. **Z. Sacks, D. Kinsland, R. Lee, J.F. Lee**, A perfectly matched anisotropic absorber for use as an absorbing boundary condition, *IEEE Trans. Antennas Propagat.*, **43**, 1460–1463 (1995).
184. **S. Saks, A. Zygmund**, *Analytic functions*, PWN, Warszawa (1965).
185. **J. Sanchez Hubert, E. Sanchez Palencia**, *Vibration and coupling of continuous systems*, Springer Verlag (1989).
186. **J. Schaeffer**, Global existence of smooth solutions to the Vlasov–Poisson system in three dimensions. *Comm. P.D.E.*, **16**, 1313–1335 (1991).
187. **L. Schwartz**, *Théorie des distributions*, Hermann, Paris (1966).
188. **M. Sermange, R. Temam**, Some mathematical questions related to the MHD equations, *Comm. Pure Appl. Math.*, **36**, 635–664 (1983).
189. **M. Sesques**, Conditions aux limites artificielles pour le système de Maxwell, PhD Thesis, Bordeaux I University, France (1990). (in French)
190. **D. Sheen**, A generalized Green's theorem, *Appl. Math. Lett.*, **5**, 95–98 (1992).
191. **S. Silver**, *Microwave Antenna Theory and Design*, M.I.T. Radiation Laboratory Series, **12**, McGraw-Hill, New York (1949).
192. **J. Simon**, Compact sets in the space $L^p(0,T;B)$, *Ann. Mat. Pura Appl.*, **146**, 65–96 (1987).
193. **F. Simpson and K. Bahr**, *Practical magnetotellurics*, Cambridge University Press, Cambridge (2005).
194. **M. Slodicka and S. Durand**, Fully discrete finite element scheme for Maxwell's equations with non-linear boundary condition, *J. Math. Anal. Appl.*, **375**, 230–244 (2011).
195. **A. Sommerfeld**, Die Greensche Funktion der Schwingungsgleichung, *Jber. Deutsch. Math. Verein.*, **21**, 309–353 (1912).
196. **M. D. Spivak**, *A comprehensive introduction to differential geometry*, Publish or Perish, Houston, Texas, 1999

197. **T.H. Stix**, *Waves in plasmas*, American Institute of Physics, New York (1992).
198. **L. Tartar**, *An introduction to Sobolev spaces and interpolation spaces*, Lecture Notes of the Unione Matematica Italiana, **3**, Springer (2007).
199. **R. Temam**, *Navier-Stokes equations*, North-Holland, Amsterdam (1977).
200. **I. Terrasse**, Résolution mathématique et numérique des équations de Maxwell instationnaires par une méthode de potentiels retardés, PhD Thesis, Ecole Polytechnique, Palaiseau, France (1993). (in French)
201. **F. Trèves**, *Basic linear partial differential equations*, Academic Press, New York (1975).
202. **S. Ukai, T. Okabe**, On classical solution in the large in time of two dimensional Vlasov's equation, *Osaka J. Math.*, **15**, 245–261 (1978).
203. **J. Van Bladel**, *Electromagnetic fields*, McGraw-Hill, New York (1985).
204. **V. Vinoles**, Problèmes d'interface en présence de métamatériaux : modélisation, analyse et simulations, PhD Thesis, Université Paris-Saclay, France (2016). (in French)
205. **V. Vogelsang**, On the strong unique continuation principle for inequalities of Maxwell type, *Math. Ann.*, **289**, 285–295 (1991).
206. **C. Weber**, A local compactness theorem for Maxwell's equations, *Math. Meth. Appl. Sci.*, **2**, 12–25 (1980).
207. **C.H. Wilcox**, An expansion theorem for electromagnetic fields, *Comm. Pure Appl. Math.*, **9**, 115–134 (1956).
208. **S. Wollman**, An existence and uniqueness theorem for the Vlasov-Maxwell system, *Comm. Pure Appl. Math.*, **37**, 457-462 (1984).
209. **K. Yosida**, *Functional analysis*, Springer-Verlag, Berlin (1980).
210. **P. Zhidkov**, On global solutions for the Vlasov–Poisson system, *Electronic Journal of Differential Equations*, **58**, 1–11 (2004).

A

Index of function spaces

All spaces are understood as spaces of *complex* functions. Duals are spaces of continuous *anti-linear* functionals, with the only exception being $\mathcal{D}'(\Omega)$. However, all definitions are easily adapted to real-valued function spaces.

A.1 Basic spaces

These are spaces of scalar functions, except in §A.1.4. In all cases, $\Omega \subset \mathbb{R}^n$ is an open set, $\overline{\Omega}$ its closure and Γ its boundary. Some alternative definitions are valid under extra assumptions about Ω.
Below, $\alpha = (\alpha_1, \cdots, \alpha_n) \in \mathbb{N}^n$ is a multi-index, with $|\alpha| = \sum_{j=1}^n \alpha_j$.

A.1.1 Differentiable functions and distributions

$$
\begin{aligned}
C(\Omega),\ C(\overline{\Omega}) &= \left\{ f \text{ continuous on } \Omega, \text{ respectively } \overline{\Omega} \right\}, \\
C^m(\Omega) &= \left\{ f \in C(\Omega) : \forall \alpha \in \mathbb{N}^n,\ |\alpha| \le m,\ \partial^\alpha f \in C(\Omega) \right\}, \quad m \in \mathbb{N}; \\
C^\infty(\Omega) &= \bigcap_{m \in \mathbb{N}} C(\Omega). \\
C^m(\overline{\Omega}) &= \left\{ f \in C(\overline{\Omega}) : \exists \tilde{f} \in C^m(\mathbb{R}^n),\ f = \tilde{f}_{|\overline{\Omega}} \right\}, \quad m \in \mathbb{N} \cup \{\infty\}. \\
\mathcal{D}(\Omega) &= \left\{ f \in C^\infty(\Omega) : f \text{ has compact support in } \Omega \right\}, \\
\mathcal{D}'(\Omega) &= \text{linear dual of } \mathcal{D}(\Omega) \quad \text{(distributions)}.
\end{aligned}
$$

A.1.2 Lebesgue and Sobolev spaces

$$
\begin{aligned}
L^p(\Omega) &= \left\{ f \text{ measurable on } \Omega : \int_\Omega |f|^p \, d\boldsymbol{x} < \infty \right\}, \quad 1 \le p < \infty; \\
L^\infty(\Omega) &= \left\{ f \text{ measurable and bounded on } \Omega \right\}.
\end{aligned}
$$

$$W^{s,p}(\Omega) = \{f \in L^p(\Omega) : \forall \alpha \in \mathbb{N}^n,\ |\alpha| \le m,\ \partial^\alpha f \in L^p(\Omega)\}\,,$$
$$1 \le p \le \infty,\ s \in \mathbb{N}\,;$$
$$H^s(\Omega) = W^{s,2}(\Omega).$$

There are several equivalent definitions of $W^{s,p}(\Omega)$ and $H^s(\Omega)$ when $0 \le s \notin \mathbb{N}$ (see §2). The subscript $_{zmv}$ labels the subspaces of zero mean value functions, in the spaces where this notion is meaningful:

$$L^p_{zmv}(\Omega) = \left\{ f \in L^p(\Omega) : \int_\Omega f = 0 \right\},$$

where Ω is of finite measure if $p \neq 1$ or arbitrary if $p = 1$. The subscript $_{per}$ labels the subspaces of periodic traces, again in the spaces where this notion is meaningful.

On the other hand, the following notation is standard:

$$\begin{aligned} H^s_0(\Omega) &= \text{closure of } \mathcal{D}(\Omega) \text{ in } H^s(\Omega), \quad s \ge 0 \\ &= \left\{ f \in H^s(\Omega) \ :\ \frac{\partial^k f}{\partial n^k}_{|\Gamma} = 0,\ \forall k \in \mathbb{N},\ k < s - 1/2 \right\}. \end{aligned}$$

The second definition, involving traces and normal derivatives on the boundary, is valid under extra assumptions on Ω.

$$\begin{aligned} H^{-s}(\Omega) &= \text{dual of } H^s_0(\Omega)\,; \\ \widetilde{H}^s(\Omega) &= \{f \in H^s(\Omega) : \text{the continuation of } f \text{ by zero outside } \Omega \\ &\qquad\qquad \text{belongs to } H^s(\mathbb{R}^n)\}, \quad s \ge 0, \\ &= H^s_0(\Omega) \quad \text{unless } s - \tfrac{1}{2} \in \mathbb{N}\,; \\ \widetilde{H}^{-s}(\Omega) &= \text{dual of } \widetilde{H}^s(\Omega). \end{aligned}$$

All these spaces have "local" versions, e.g.,

$$L^p_{loc}(\Omega) = \left\{ f \text{ measurable on } \Omega : f\,\mathbf{1}_{|K} \in L^p(\Omega) \right\}, \quad \forall K \text{ compact } \subset \Omega.$$

A.1.3 Functional spaces on the boundary (trace spaces) and related spaces

Here, Γ is assumed to be a Lipschitz submanifold of $\mathbb{R}^n$. We denote $\gamma_0 : f \mapsto f_{|\Gamma}$ the trace mapping on the boundary.

$$H^{1/2}(\Gamma) = \gamma_0(H^1(\Omega)),$$
$$H^{-1/2}(\Gamma) = \text{dual of } H^{1/2}(\Gamma).$$

Let $\Gamma',\ \Gamma''$ be disjoint open subsets of Γ, with $\Gamma = \overline{\Gamma}' \cup \overline{\Gamma}''$, $meas_\Gamma(\Gamma') > 0$ and $meas_\Gamma(\Gamma'') > 0$, and such that their common boundary $\overline{\Gamma}' \cap \overline{\Gamma}''$ is a Lipschitz submanifold of Γ. The trace mappings on $\Gamma',\ \Gamma''$ are denoted $\gamma'_0,\ \gamma''_0$.

$$
\begin{aligned}
C^\infty_{\Gamma'}(\overline{\Omega}) &= \{f \in C^\infty(\overline{\Omega}) \ : \ f = 0 \text{ in a neighborhood of } \Gamma'\}\,;\\
H^s_{0,\Gamma'}(\Omega) &= \text{closure of } C^\infty_{\Gamma'}(\overline{\Omega}) \text{ in } H^s(\Omega)\\
&= \{f \in H^s(\Omega) \ : \ \gamma'_0 f := f_{|\Gamma'} = 0\}, \qquad \text{for } \tfrac{1}{2} < s < \tfrac{3}{2}\,;\\
H^{1/2}(\Gamma'') &= \gamma''_0(H^1(\Omega)),\\
H^{-1/2}(\Gamma'') &= \text{dual of } H^{1/2}(\Gamma''),\\
\widetilde{H}^{1/2}(\Gamma'') &= \{g \in H^{1/2}(\Gamma'') : \text{the continuation of } g \text{ by zero on } \Gamma'\\
&\qquad\qquad\qquad \text{belongs to } H^{1/2}(\Gamma)\}\\
&= \gamma''_0(H^1_{0,\Gamma'}(\Omega)),\\
\widetilde{H}^{-1/2}(\Gamma'') &= \text{dual of } \widetilde{H}^{1/2}(\Gamma'').
\end{aligned}
$$

A.1.4 Spaces of vector fields

Generally speaking, bold italic letters denote spaces of three-dimensional vector fields ($\boldsymbol{L}^2(\Omega) = L^2(\Omega)^3$, etc.) and bold upright letters denote spaces of two-dimensional vector fields ($\mathbf{H}^1(\Omega) = H^1(\Omega)^2$, etc.).

A.2 Electromagnetic spaces

In this section, $\Omega \subset \mathbb{R}^3$ is a three-dimensional *domain* (= open, bounded, connected set with a Lipschitz boundary); some definitions are also valid for more general open sets. The boundary is still denoted Γ, and $\boldsymbol{n}$ is the unit outgoing normal. Furthermore, $\mathfrak{k}$ is a tensor field on Ω such that

$$
\begin{aligned}
&\mathfrak{k}, \mathfrak{k}^{-1} \in \mathbb{L}^\infty(\Omega), \text{ or, equivalently,}\\
&(\mathfrak{k})_{i,j} \in L^\infty(\Omega) \text{ and } (\mathfrak{k}^{-1})_{i,j} \in L^\infty(\Omega), \ 1 \le i,j \le 3.
\end{aligned}
\tag{A.1}
$$

Alternatively, ξ is a scalar field on Ω, bounded above and below by strictly positive constants.

If Ω is not topologically trivial, one introduces the cuts $(\Sigma_i)_{1\le i\le I}$ and $\dot{\Omega} := \Omega \setminus \bigcup \Sigma_i$. If the boundary is not connected, its connected components are denoted $(\Gamma_k)_{0\le k\le K}$, where Γ_0 is the "exterior" boundary that separates Ω from an unbounded region of $\mathbb{R}^3$.

A.2.1 Basic spaces of electromagnetic fields

$$
\begin{aligned}
\boldsymbol{H}(\mathbf{curl}, \Omega) &= \{\boldsymbol{v} \in \boldsymbol{L}^2(\Omega) \ : \ \mathbf{curl}\,\boldsymbol{v} \in \boldsymbol{L}^2(\Omega)\},\\
\boldsymbol{H}(\mathbf{curl}\,\mathfrak{k}, \Omega) &= \{\boldsymbol{v} \in \boldsymbol{L}^2(\Omega) \ : \ \mathbf{curl}\,\mathfrak{k}\boldsymbol{v} \in \boldsymbol{L}^2(\Omega)\}\\
&= \{\boldsymbol{v} \in \boldsymbol{L}^2(\Omega) \ : \ \mathfrak{k}\boldsymbol{v} \in \boldsymbol{H}(\mathbf{curl}, \Omega)\} \quad \text{under (A.1)}\,;\\
\boldsymbol{H}(\mathrm{div}, \Omega) &= \{\boldsymbol{v} \in \boldsymbol{L}^2(\Omega) \ : \ \mathrm{div}\,\boldsymbol{v} \in L^2(\Omega)\},
\end{aligned}
$$

$$\begin{aligned}
\boldsymbol{H}(\operatorname{div}\mathfrak{k},\Omega) &= \{\boldsymbol{v}\in\boldsymbol{L}^2(\Omega)\ :\ \operatorname{div}\mathfrak{k}\boldsymbol{v}\in L^2(\Omega)\}\\
&= \{\boldsymbol{v}\in\boldsymbol{L}^2(\Omega)\ :\ \mathfrak{k}\boldsymbol{v}\in\boldsymbol{H}(\operatorname{div},\Omega)\},\quad \text{under (A.1)}\,;\\
\boldsymbol{H}_{-s}(\operatorname{div},\Omega) &= \{\boldsymbol{v}\in\boldsymbol{L}^2(\Omega)\ :\ \operatorname{div}\boldsymbol{v}\in H^{-s}(\Omega)\},\quad s\in[0,1].
\end{aligned}$$

Spaces with vanishing traces

As usual, they are denoted by a subscript $_0$.

$$\begin{aligned}
\boldsymbol{H}_0(\mathbf{curl},\Omega) &= \text{closure of } \boldsymbol{D}(\Omega) \text{ in } \boldsymbol{H}(\mathbf{curl},\Omega)\\
&= \{\boldsymbol{v}\in\boldsymbol{H}(\mathbf{curl},\Omega)\ :\ \boldsymbol{v}\times\boldsymbol{n}_{|\Gamma}=0\}\,;\\
\boldsymbol{H}_0(\operatorname{div},\Omega) &= \text{closure of } \boldsymbol{D}(\Omega) \text{ in } \boldsymbol{H}(\operatorname{div},\Omega)\\
&= \{\boldsymbol{v}\in\boldsymbol{H}(\operatorname{div},\Omega)\ :\ \boldsymbol{v}\cdot\boldsymbol{n}_{|\Gamma}=0\}\,;\\
\boldsymbol{H}_0(\mathbf{curl}\,\mathfrak{k},\Omega) &= \{\boldsymbol{v}\in\boldsymbol{L}^2(\Omega)\ :\ \mathfrak{k}\boldsymbol{v}\in\boldsymbol{H}_0(\mathbf{curl},\Omega)\},\quad \text{under (A.1)}\,;\\
\boldsymbol{H}_0(\operatorname{div}\mathfrak{k},\Omega) &= \{\boldsymbol{v}\in\boldsymbol{L}^2(\Omega)\ :\ \mathfrak{k}\boldsymbol{v}\in\boldsymbol{H}_0(\operatorname{div},\Omega)\},\quad \text{under (A.1)}.
\end{aligned}$$

One can also consider spaces with traces vanishing on only part of the boundary, e.g.,

$$\begin{aligned}
\boldsymbol{H}_{0,\Gamma'}(\mathbf{curl},\Omega) &= \text{closure of } \boldsymbol{C}^\infty_{\Gamma'}(\overline{\Omega}) \text{ in } \boldsymbol{H}(\mathbf{curl},\Omega)\\
&= \{\boldsymbol{v}\in\boldsymbol{H}(\mathbf{curl},\Omega)\ :\ \boldsymbol{v}\times\boldsymbol{n}_{|\Gamma'}=0\},\quad \text{etc.}\\
\boldsymbol{H}^+_{0,\Gamma'}(\mathbf{curl},\Omega) &:= \{\boldsymbol{f}\in\boldsymbol{H}_{0,\Gamma'}(\mathbf{curl},\Omega)\ :\ \boldsymbol{f}\times\boldsymbol{n}_{|\Gamma''}\in\boldsymbol{L}^2_t(\Gamma'')\}.
\end{aligned}$$

Curl-free and divergence-free spaces

They are denoted by a 0 after the operator.

$$\begin{aligned}
\boldsymbol{H}(\operatorname{div}0,\Omega) &= \{\boldsymbol{v}\in\boldsymbol{H}(\operatorname{div},\Omega)\ :\ \operatorname{div}\boldsymbol{v}=0\}\,;\\
\boldsymbol{H}_0(\operatorname{div}0,\Omega) &= \boldsymbol{H}(\operatorname{div}0,\Omega)\cap\boldsymbol{H}_0(\operatorname{div},\Omega)\,;\\
\boldsymbol{H}(\mathbf{curl}\,0,\Omega) &= \{\boldsymbol{v}\in\boldsymbol{H}(\mathbf{curl},\Omega)\ :\ \mathbf{curl}\,\boldsymbol{v}=0\}\,;\\
\boldsymbol{H}_0(\mathbf{curl}\,0,\Omega) &= \boldsymbol{H}(\mathbf{curl}\,0,\Omega)\cap\boldsymbol{H}_0(\mathbf{curl},\Omega)\\
\boldsymbol{H}(\operatorname{div}\mathfrak{k}0,\Omega) &= \{\boldsymbol{v}\in\boldsymbol{H}(\operatorname{div}\mathfrak{k},\Omega)\ :\ \operatorname{div}\mathfrak{k}\boldsymbol{v}=0\}\,;\\
\boldsymbol{H}_0(\operatorname{div}\mathfrak{k}0,\Omega) &= \boldsymbol{H}(\operatorname{div}\mathfrak{k}0,\Omega)\cap\boldsymbol{H}_0(\operatorname{div}\mathfrak{k},\Omega)\,;\\
\boldsymbol{H}(\mathbf{curl}\,\mathfrak{k}0,\Omega) &= \{\boldsymbol{v}\in\boldsymbol{H}(\mathbf{curl}\,\mathfrak{k},\Omega)\ :\ \mathbf{curl}\,\mathfrak{k}\boldsymbol{v}=0\}\,;\\
\boldsymbol{H}_0(\mathbf{curl}\,\mathfrak{k}0,\Omega) &= \boldsymbol{H}(\mathbf{curl}\,\mathfrak{k}0,\Omega)\cap\boldsymbol{H}_0(\mathbf{curl}\,\mathfrak{k},\Omega).
\end{aligned}$$

Other subspaces.

They are used in scalar and vector potential theory.

$$\begin{aligned}
\boldsymbol{H}^\Sigma_0(\operatorname{div}0,\Omega) &:= \{\boldsymbol{f}\in\boldsymbol{H}_0(\operatorname{div}0,\Omega)\ :\ \langle\boldsymbol{f}\cdot\boldsymbol{n},1\rangle_{\Sigma_i}=0,\ \forall i\}\,;\\
\boldsymbol{H}^\Gamma(\operatorname{div}0,\Omega) &:= \{\boldsymbol{f}\in\boldsymbol{H}(\operatorname{div}0,\Omega)\ :\ \langle\boldsymbol{f}\cdot\boldsymbol{n},1\rangle_{H^{1/2}(\Gamma_k)}=0,\ \forall k\}\,;\\
\boldsymbol{H}^\Gamma_0(\mathbf{curl},\Omega) &:= \{\boldsymbol{w}\in\boldsymbol{H}_0(\mathbf{curl},\Omega)\ :\ P_{\boldsymbol{Z}^\varepsilon_N}\boldsymbol{w}=0\}\,;\\
\boldsymbol{H}^\Sigma(\mathbf{curl}\,0,\Omega) &:= \{\boldsymbol{f}\in\boldsymbol{H}(\mathbf{curl}\,0,\Omega)\ :\ P_{\boldsymbol{Z}^\mu_T}\boldsymbol{f}=0\}.
\end{aligned}$$

Above, $P_{\boldsymbol{Z}^\varepsilon_N}$ and $P_{\boldsymbol{Z}^\mu_T}$ designate weighted $\boldsymbol{L}^2$-orthogonal projections onto the spaces $\boldsymbol{Z}_N(\Omega;\mathfrak{e})$, $\boldsymbol{Z}_T(\Omega;\mathfrak{p})$ (see paragraph "Kernels" in §A.2.3).

A.2.2 Tangential trace spaces

In addition to the notations of this section, we use those of §A.1.3. The tangential trace and tangential components mappings are denoted $\gamma_\top : \boldsymbol{f} \mapsto \boldsymbol{f} \times \boldsymbol{n}_{|\Gamma}$ and $\pi_\top : \boldsymbol{f} \mapsto \boldsymbol{n} \times (\boldsymbol{f} \times \boldsymbol{n})_{|\Gamma}$. Other operators are defined in §3.1.

Traces on the whole boundary.

$$\begin{aligned}
\boldsymbol{L}^2_t(\Gamma) &= \{\boldsymbol{v} \in \boldsymbol{L}^2(\Gamma) \ : \ \boldsymbol{v} \cdot \boldsymbol{n} = 0\}. \\
\boldsymbol{H}^{1/2}_\perp(\Gamma) \ = \ \gamma_\top(\boldsymbol{H}^1(\Omega)), \quad \boldsymbol{H}^{1/2}_\parallel(\Gamma) \ &= \ \pi_\top(\boldsymbol{H}^1(\Omega))\,; \\
\boldsymbol{H}^{-1/2}_\perp(\Gamma),\ \boldsymbol{H}^{-1/2}_\parallel(\Gamma) &= \text{their duals, with } \boldsymbol{L}^2_t(\Gamma) \text{ as the pivot space}\,; \\
\boldsymbol{H}^{-1/2}_\parallel(\mathrm{div}_\Gamma, \Gamma) &= \{\boldsymbol{f} \in \boldsymbol{H}^{-1/2}_\parallel(\Gamma) \ : \ \mathrm{div}_\Gamma\, \boldsymbol{f} \in H^{-1/2}(\Gamma)\} \\
&= \gamma_\top(\boldsymbol{H}(\mathbf{curl}, \Omega))\,; \\
\boldsymbol{H}^{-1/2}_\perp(\mathrm{curl}_\Gamma, \Gamma) &= \{\boldsymbol{f} \in \boldsymbol{H}^{-1/2}_\perp(\Gamma) \ : \ \mathrm{curl}_\Gamma\, \boldsymbol{f} \in H^{-1/2}(\Gamma)\} \\
&= \pi_\top(\boldsymbol{H}(\mathbf{curl}, \Omega)).
\end{aligned}$$

The latter two spaces are dual with respect to the pivot space $\boldsymbol{L}^2_t(\Gamma)$. This duality is generally denoted ${}_\gamma\langle\cdot,\cdot\rangle_\pi$ or ${}_\pi\langle\cdot,\cdot\rangle_\gamma$.

Traces on part of the boundary.

Let Γ' denote a part of the boundary, and $\Gamma'' = int(\Gamma \setminus \Gamma')$. Tangential trace and tangential components mappings on Γ' are denoted by $\gamma_{\top'}$, $\pi_{\top'}$ when they originate from $\boldsymbol{H}(\mathbf{curl}, \Omega)$, respectively $\gamma^0_{\top'}$, $\pi^0_{\top'}$ when they originate from $\boldsymbol{H}_{0,\Gamma''}(\mathbf{curl}, \Omega)$. For a vector field $\boldsymbol{v}$ on Γ', we call $\tilde{\boldsymbol{v}}$ the field defined on Γ by $\tilde{\boldsymbol{v}} = \boldsymbol{v}$ on Γ' and $\widetilde{\boldsymbol{v}} = 0$ on Γ''.

$$\begin{aligned}
\widetilde{\boldsymbol{H}}^{1/2}_\parallel(\Gamma') &= \{\boldsymbol{v} \in \boldsymbol{H}^{1/2}_\parallel(\Gamma') \ : \ \tilde{\boldsymbol{v}} \in \boldsymbol{H}^{1/2}_\parallel(\Gamma)\} \\
&= \pi_{\top'}(\boldsymbol{H}^1_{0,\Gamma''}(\Omega))\,; \\
\widetilde{\boldsymbol{H}}^{1/2}_\perp(\Gamma') &= \{\boldsymbol{v} \in \boldsymbol{H}^{1/2}_\perp(\Gamma') \ : \ \tilde{\boldsymbol{v}} \in \boldsymbol{H}^{1/2}_\perp(\Gamma)\} \\
&= \gamma_{\top'}(\boldsymbol{H}^1_{0,\Gamma''}(\Omega))\,; \\
\widetilde{\boldsymbol{H}}^{-1/2}_\parallel(\Gamma'),\ \widetilde{\boldsymbol{H}}^{-1/2}_\perp(\Gamma') &= \text{their duals}\,; \\
\widetilde{\boldsymbol{H}}^{-1/2}_\parallel(\mathrm{div}_\Gamma, \Gamma') &= \{\boldsymbol{f} \in \widetilde{\boldsymbol{H}}^{-1/2}_\parallel(\Gamma') \ : \ \mathrm{div}_\Gamma\, \boldsymbol{f} \in \widetilde{H}^{-1/2}(\Gamma')\} \\
&= \gamma_{\top'}(\boldsymbol{H}(\mathbf{curl}, \Omega))\,; \\
\widetilde{\boldsymbol{H}}^{-1/2}_\perp(\mathrm{curl}_\Gamma, \Gamma') &= \{\boldsymbol{f} \in \widetilde{\boldsymbol{H}}^{-1/2}_\perp(\Gamma') \ : \ \mathrm{curl}_\Gamma\, \boldsymbol{f} \in \widetilde{H}^{-1/2}(\Gamma')\} \\
&= \pi_{\top'}(\boldsymbol{H}(\mathbf{curl}, \Omega))\,; \\
\boldsymbol{H}^{-1/2}_{\parallel,0}(\mathrm{div}_\Gamma, \Gamma') &= \gamma^0_{\top'}(\boldsymbol{H}_{0,\Gamma''}(\mathbf{curl}, \Omega)) \\
&= \{\boldsymbol{f} \in \boldsymbol{H}^{-1/2}_\parallel(\mathrm{div}_\Gamma, \Gamma') \ : \ \tilde{\boldsymbol{f}} \in \boldsymbol{H}^{-1/2}_\parallel(\mathrm{div}_\Gamma, \Gamma)\} \\
&= \{\boldsymbol{f} \in \boldsymbol{H}^{-1/2}_\parallel(\mathrm{div}_\Gamma, \Gamma') \ : \ t_{\boldsymbol{\nu}'}(\boldsymbol{f}) = 0\}\,;
\end{aligned}$$

$$\begin{aligned}\boldsymbol{H}_{\perp,0}^{-1/2}(\mathrm{curl}_\Gamma,\Gamma') &= \pi^0_{\top'}(\boldsymbol{H}_{0,\Gamma''}(\mathbf{curl},\Omega))\\ &= \{\boldsymbol{f}\in\boldsymbol{H}_\perp^{-1/2}(\mathrm{curl}_\Gamma,\Gamma')\ :\ \tilde{\boldsymbol{f}}\in\boldsymbol{H}_\perp^{-1/2}(\mathrm{curl}_\Gamma,\Gamma)\}\\ &= \{\boldsymbol{f}\in\boldsymbol{H}_\perp^{-1/2}(\mathrm{curl}_\Gamma,\Gamma')\ :\ t_{\boldsymbol{\tau}'}(\boldsymbol{f})=0\}.\end{aligned}$$

The spaces $\widetilde{\boldsymbol{H}}_\parallel^{-1/2}(\mathrm{div}_\Gamma,\Gamma')$ and $\boldsymbol{H}_{\perp,0}^{-1/2}(\mathrm{curl}_\Gamma,\Gamma')$ are dual; their duality is denoted ${}_{\gamma'}\langle\cdot,\cdot\rangle_{\pi'_0}$ or conversely. Similarly, the spaces $\boldsymbol{H}_{\parallel,0}^{-1/2}(\mathrm{div}_\Gamma,\Gamma')$ and $\widetilde{\boldsymbol{H}}_\perp^{-1/2}(\mathrm{curl}_\Gamma,\Gamma')$ are dual; their duality is denoted ${}_{\gamma'_0}\langle\cdot,\cdot\rangle_{\pi'}$ or conversely.

A.2.3 "Natural spaces" and their subspaces

The notation follows certain principles. The letter $\boldsymbol{X}$ is generally used for the spaces of electric or magnetic fields; the subscripts $_N$ and $_T$ ("normal" and "tangential") designate the behaviour on a perfectly conducting boundary. They are sometimes omitted, in order to:

- either "factor" many statements valid in both cases;
- or simplify notations when one concentrates on a particular problem, and the boundary condition is fixed.

The subscript $_A$ ("absorbing" condition on an "artificial" boundary) is used for the Silver–Müller boundary condition. The "physical" (perfectly conducting) and "artificial" (absorbing) parts of the boundary are respectively denoted Γ_P and Γ_A.

The notation is complemented with indications of the material coefficients or dielectric/magnetic tensors $\mathfrak{e}$, $\mathfrak{m}$ (if omitted, they are scalar and constant) and/or the measure of the divergence (if omitted, divergence is measured in L^2). We may write $\mathfrak{k}$ to cover both $\mathfrak{e}$ and $\mathfrak{m}$. In addition to (A.1), these tensor fields are assumed to be symmetric, real-valued and to satisfy a uniform bound:

$$\exists\xi_-,\xi_+>0,\ \forall\boldsymbol{X}\in\mathbb{C}^3,\ \xi_-\,|\boldsymbol{X}|^2\le\mathfrak{k}\boldsymbol{X}\cdot\overline{\boldsymbol{X}}\le\xi_+\,|\boldsymbol{X}|^2 \text{ a.e. in } \Omega. \tag{A.2}$$

These coefficients may be written ε, μ in normal Greek font if they are scalar.

$$\begin{aligned}\boldsymbol{X}_N(\Omega) &= \boldsymbol{H}_0(\mathbf{curl},\Omega)\cap\boldsymbol{H}(\mathrm{div},\Omega),\\ \boldsymbol{X}_T(\Omega) &= \boldsymbol{H}(\mathbf{curl},\Omega)\cap\boldsymbol{H}_0(\mathrm{div},\Omega),\\ \boldsymbol{X}_N(\Omega;\mathfrak{e}) &= \boldsymbol{H}_0(\mathbf{curl},\Omega)\cap\boldsymbol{H}(\mathrm{div}\,\mathfrak{e},\Omega),\\ \boldsymbol{X}_T(\Omega;\mathfrak{m}) &:= \boldsymbol{H}(\mathbf{curl},\Omega)\cap\boldsymbol{H}_0(\mathrm{div}\,\mathfrak{m},\Omega),\\ \boldsymbol{X}_{N,-s}(\Omega;\mathfrak{e}) &:= \{\boldsymbol{f}\in\boldsymbol{H}_0(\mathbf{curl},\Omega)\ :\ \mathrm{div}\,\mathfrak{e}\boldsymbol{f}\in H^{-s}(\Omega)\},\\ \boldsymbol{X}_{N,A}(\Omega;\mathfrak{k}) &:= \{\boldsymbol{f}\in\boldsymbol{H}_{0,\Gamma_P}(\mathbf{curl},\Omega)\ :\ \mathrm{div}\,\mathfrak{k}\boldsymbol{f}\in L^2(\Omega),\ \boldsymbol{f}\times\boldsymbol{n}_{|\Gamma_A}\in\boldsymbol{L}^2_t(\Gamma_A)\}.\end{aligned}$$

The letter $\boldsymbol{Y}$ is used to denote certain spaces with an improved regularity of the normal trace, e.g.,

$$\boldsymbol{Y}_T(\Omega;\mathfrak{k}) := \{\boldsymbol{f}\in\boldsymbol{H}(\mathbf{curl},\Omega)\cap\boldsymbol{H}(\mathrm{div}\,\mathfrak{k},\Omega)\ :\ \mathfrak{k}\boldsymbol{f}\cdot\boldsymbol{n}_{|\Gamma}\in L^2(\Gamma)\}.$$

Kernels

The letters $\boldsymbol{K}$ respectively $\boldsymbol{Z}$ designate the spaces with vanishing divergence, respectively divergence and curl.

$$\begin{aligned}
\boldsymbol{K}_N(\Omega;\mathbb{c}) &:= \boldsymbol{H}_0(\mathbf{curl},\Omega)\cap\boldsymbol{H}(\operatorname{div}\mathbb{c}0,\Omega),\\
\boldsymbol{K}_T(\Omega;\mathbb{p}) &:= \boldsymbol{H}(\mathbf{curl},\Omega)\cap\boldsymbol{H}_0(\operatorname{div}\mathbb{p}0,\Omega),\\
\boldsymbol{K}_{N,A}(\Omega;\mathbb{f}) &:= \boldsymbol{X}_{N,A}(\Omega;\mathbb{f})\cap\boldsymbol{H}(\operatorname{div}\mathbb{f}0,\Omega).\\
\boldsymbol{Z}_N(\Omega) &:= \boldsymbol{H}_0(\mathbf{curl}\,0,\Omega)\cap\boldsymbol{H}(\operatorname{div}0,\Omega) \;=\; \mathbf{grad}\,Q_N(\Omega),\\
\boldsymbol{Z}_T(\Omega) &:= \boldsymbol{H}(\mathbf{curl}\,0,\Omega)\cap\boldsymbol{H}_0(\operatorname{div}0,\Omega) \;=\; \widetilde{\mathbf{grad}}\,Q_T(\dot\Omega),\\
\boldsymbol{Z}_N(\Omega;\mathbb{c}) &:= \boldsymbol{H}_0(\mathbf{curl}\,0,\Omega)\cap\boldsymbol{H}(\operatorname{div}\mathbb{c}0,\Omega) \;=\; \mathbf{grad}\,Q_N(\Omega;\mathbb{c}),\\
\boldsymbol{Z}_T(\Omega;\mathbb{p}) &:= \boldsymbol{H}(\mathbf{curl}\,0,\Omega)\cap\boldsymbol{H}_0(\operatorname{div}\mathbb{p}0,\Omega) \;=\; \widetilde{\mathbf{grad}}\,Q_T(\dot\Omega;\mathbb{p}).
\end{aligned}$$

The Q spaces are defined in §A.2.4: $\widetilde{\mathbf{grad}}$ denotes the gradient in $\dot\Omega$, extended to a vector field on Ω.

Other subspaces

$$\begin{aligned}
\boldsymbol{X}_N^{\Gamma}(\Omega) &:= \{\boldsymbol{f}\in\boldsymbol{X}_N(\Omega)\;:\;\langle\boldsymbol{f}\cdot\boldsymbol{n},1\rangle_{H^{1/2}(\Gamma_k)}=0,\;1\le k\le K\},\\
\boldsymbol{X}_T^{\Sigma}(\Omega) &:= \{\boldsymbol{f}\in\boldsymbol{X}_T(\Omega)\;:\;\langle\boldsymbol{f}\cdot\boldsymbol{n},1\rangle_{\Sigma_i}=0,\;1\le i\le I\}.
\end{aligned}$$

A.2.4 Potentials and related spaces

Basic bricks (same notations as above)

$$\begin{aligned}
P(\dot\Omega) &:= \{q\in H^1(\dot\Omega)\;:\;[q]_{\Sigma_i}=cst_i,\;1\le i\le I\},\\
P_{zmv}(\dot\Omega) &:= P(\dot\Omega)\cap L^2_{zmv}(\dot\Omega).\\
Q_N(\Omega) &:= \{q\in H^1(\Omega)\;:\;\Delta q=0\,\text{in}\,\Omega,\;q=0\,\text{on}\,\Gamma_0,\;q=cst_k\,\text{on}\,\Gamma_k,\;1\le k\le K\},\\
Q_T(\dot\Omega) &:= \{\dot q\in P_{zmv}(\dot\Omega)\;:\;\operatorname{div}(\widetilde{\mathbf{grad}}\,\dot q)=0\,\text{in}\,\Omega,\;\widetilde{\mathbf{grad}}\,\dot q^{\mu}\cdot\boldsymbol{n}=0\,\text{on}\,\Gamma\}.\\
Q_N(\Omega;\mathbb{c}) &:= \{q^{\varepsilon}\in H^1(\Omega)\;:\;\operatorname{div}(\mathbb{c}\,\mathbf{grad}\,q^{\varepsilon})=0\,\text{in}\,\Omega,\\
&\qquad\qquad q^{\varepsilon}=0\,\text{on}\,\Gamma_0,\;q^{\varepsilon}=cst_k\,\text{on}\,\Gamma_k,\;1\le k\le K\},\\
Q_T(\dot\Omega;\mathbb{p}) &:= \{\dot q^{\mu}\in P_{zmv}(\dot\Omega)\;:\;\operatorname{div}(\mathbb{p}\,\widetilde{\mathbf{grad}}\,\dot q^{\mu})=0\,\text{in}\,\Omega,\;\mathbb{p}\widetilde{\mathbf{grad}}\,\dot q^{\mu}\cdot\boldsymbol{n}=0\,\text{on}\,\Gamma\}.\\
H^{1+}_{0,\Gamma_P}(\Omega) &:= \{f\in H^1_{0,\Gamma_P}(\Omega)\;:\;f_{|\Gamma_A}\in H^1(\Gamma_A)\}.
\end{aligned}$$

Natural spaces of potentials

The complements of the spaces $\boldsymbol{K}$ within $\boldsymbol{X}$ are spaces of gradients, along the lines of: $\boldsymbol{X}=\boldsymbol{K}\oplus\mathbf{grad}\,\Phi$, with double orthogonality for the norms of $\boldsymbol{X}$ and $\boldsymbol{L}^2$.

$$\Phi_N(\Omega) := \{\varphi\in H^1_0(\Omega):\Delta\varphi\in L^2(\Omega)\},$$

$$\begin{aligned}
\Phi_T(\Omega) &:= \{\varphi \in H^1_{zmv}(\Omega) : \Delta\varphi \in L^2(\Omega),\ \partial_n\varphi_{|\Gamma} = 0\},\\
\Phi_N(\Omega;\mathbb{c}) &:= \{\varphi \in H^1_0(\Omega) : \operatorname{div}(\mathbb{c}\,\mathbf{grad}\,\varphi) \in L^2(\Omega)\},\\
\Phi_{N,-s}(\Omega;\mathbb{c}) &:= \{\varphi \in H^1_0(\Omega) : \operatorname{div}(\mathbb{c}\,\mathbf{grad}\,\varphi) \in H^{-s}(\Omega)\},\\
\Phi_T(\Omega;\mathbb{p}) &:= \{\varphi \in H^1_{zmv}(\Omega) : \operatorname{div}(\mathbb{p}\,\mathbf{grad}\,\varphi) \in L^2(\Omega),\ \mathbb{p}\,\mathbf{grad}\,\varphi\cdot\boldsymbol{n}_{|\Gamma} = 0\}.
\end{aligned}$$

The domain and boundary condition indications can be omitted, just as in the $\boldsymbol{X}$ spaces.

A.2.5 Spaces of improved regularity

The "intrisic" regularity scales for electromagnetic fields are the A-Sobolev scales $\boldsymbol{X}^s_N(\Omega;\mathbb{c})$, $\boldsymbol{X}^s_T(\Omega;\mathbb{p})$. In practice, one only uses $\boldsymbol{X}^0(\Omega;\mathbb{f}) = \boldsymbol{L}^2(\Omega)$, $\boldsymbol{X}^1(\Omega;\mathbb{f}) = \boldsymbol{X}(\Omega;\mathbb{f})$, $\boldsymbol{X}^2(\Omega;\mathbb{f}) = \tilde{\boldsymbol{X}}(\Omega;\mathbb{f})$ defined in the electric and magnetic cases as:

$$\begin{aligned}
\tilde{\boldsymbol{X}}_N(\Omega) &= \left\{\boldsymbol{u} \in \boldsymbol{X}_N(\Omega) : \mathbf{curl}\,\boldsymbol{u} \in \boldsymbol{H}(\mathbf{curl},\Omega) \text{ and } \operatorname{div}\boldsymbol{u} \in H^1_0(\Omega)\right\},\\
\tilde{\boldsymbol{X}}_T(\Omega) &= \left\{\boldsymbol{u} \in \boldsymbol{X}_T(\Omega) : \mathbf{curl}\,\boldsymbol{u} \in \boldsymbol{H}_0(\mathbf{curl},\Omega) \text{ and } \operatorname{div}\boldsymbol{u} \in H^1(\Omega)\right\},\\
\tilde{\boldsymbol{X}}_N(\Omega;\mathbb{c}) &= \left\{\boldsymbol{u} \in \boldsymbol{X}_N(\Omega;\mathbb{c}) : \mathbb{p}^{-1}\,\mathbf{curl}\,\boldsymbol{u} \in \boldsymbol{H}(\mathbf{curl},\Omega) \text{ and } \operatorname{div}\mathbb{c}\boldsymbol{u} \in H^1_0(\Omega)\right\},\\
\tilde{\boldsymbol{X}}_T(\Omega;\mathbb{p}) &= \left\{\boldsymbol{u} \in \boldsymbol{X}_T(\Omega;\mathbb{p}) : \mathbb{c}^{-1}\,\mathbf{curl}\,\boldsymbol{u} \in \boldsymbol{H}_0(\mathbf{curl},\Omega) \text{ and } \operatorname{div}\mathbb{p}\boldsymbol{u} \in H^1(\Omega)\right\}.
\end{aligned}$$

The superscript ^{reg} designates spaces of $\boldsymbol{H}^1$ regularity:

$$\boldsymbol{X}^{\text{reg}}_N(\Omega) = \boldsymbol{H}^1(\Omega) \cap \boldsymbol{H}_0(\mathbf{curl},\Omega), \quad \boldsymbol{X}^{\text{reg}}_T(\Omega) = \boldsymbol{H}^1(\Omega) \cap \boldsymbol{H}_0(\operatorname{div},\Omega).$$

A.3 Dimension reduction and weighted spaces

In this section, we use the notation of §9:

- Either, Ω is an axisymmetric domain, and the cylindrical coordinates (r,θ,z) are used. Then, ω and γ_b are the traces of Ω and Γ in a meridian half-plane; and $\partial\omega = \gamma_a \cup \gamma_b$, with γ_a part of the (Oz) axis.
- Or, Ω is a prismatic domain or an infinite cylinder of axis (Oz). In the first case, its boundary is made of the *lateral surface* Γ_{lat} and the *bases*. Then, ω and γ are the traces of Ω and Γ_{lat}, respectively Γ, in a transversal plane.

A.3.1 Axisymmetric and translationally symmetric spaces

The breve sign $\breve{}$ labels spaces of *invariant-by-rotation* scalar fields and *contravariant-by-rotation* vector fields (both called axisymmetric for short). The same notation is used for invariance by translation (w.r.t. z); the context generally specifies the meaning. Examples:

$$\breve{H}^1_0(\Omega),\ \breve{\boldsymbol{H}}(\mathbf{curl},\Omega),\ \breve{\boldsymbol{H}}^s(\Omega),\ \breve{\boldsymbol{X}}_T(\Omega;\mathbb{f}),\ \breve{H}^{1/2}(\Gamma),\ldots$$

Such spaces are isomorphic to the spaces of their traces in a meridian half-plane (or a transversal plane).

A.3.2 Basic weighted spaces in the meridian section

This subsection and the next deal with axisymmetric domains. For any real number τ, one defines:

$$L^2_\tau(\omega) = \{f \text{ measurable on } \omega : \int_\omega |f|^2\, r^\tau\, dr\, dz < \infty\},$$
$$H^s_\tau(\omega) = \{f \in L^2_\tau(\omega) : \partial_r^l \partial_z^m f \in L^2_\tau(\omega), \forall\, l, m,\ 0 \le l + m \le s\}, \quad s \in \mathbb{N}.$$

The scale $(H^s_\tau(\omega))_{s\ge 0}$ is extended to non-integral values of s by interpolation. A prominent role is played by $L^2_1(\omega)$; upon this space, we build another scale

$$V^s_1(\omega) := \left\{w \in H^s_1(\omega) : r^{\ell+m-s}\, \partial_r^\ell \partial_z^m w \in L^2_1(\omega),\ \forall \ell, m \text{ s.t. } 0 \le \ell + m \le \lfloor s \rfloor\right\},$$

where $\lfloor s \rfloor$ denotes the integral part of s. This general definition reduces to

$$V^s_1(\omega) = \left\{w \in H^s_1(\omega) : \partial_r^j w\big|_{\gamma_a} = 0,\ \text{for all } j \in \mathbb{N} \text{ s.t. } j < s - 1\right\},$$

when s is not an integer, while, for the first values of $s \in \mathbb{N}$,

$$V^0_1(\omega) = L^2_1(\omega), \quad V^1_1(\omega) = H^1_1(\omega) \cap L^2_{-1}(\omega), \quad V^2_1(\omega) = H^2_1(\omega) \cap H^1_{-1}(\omega).$$

Spaces with vanishing traces on the physical boundary γ_b are denoted

$$H^s_{1,\diamond}(\omega) = \{f \in H^s_1(\omega) : f_{|\gamma_b} = 0\}, \quad V^s_{1,\circ}(\omega) = \{f \in V^s_1(\omega) : f_{|\gamma_b} = 0\}$$

(for $\frac{1}{2} < s < \frac{3}{2}$, generalisation is obvious). N.B.: for $s \ge 1$, the elements of $V^s_{1,\circ}(\omega)$ automatically vanish on γ_a, too.

The scales $H^s_1(\omega)$ and $V^s_1(\omega)$ are extended to negative values of s by duality w.r.t. the pivot space $L^2_1(\omega)$.

Spaces of vector fields are denoted with boldface letters, as in §A.1.4. Also, notice the space

$$\mathcal{H}^s(\omega) = V^s_1(\omega) \times H^s_1(\omega).$$

Finally, weighted spaces can be constructed on (part of) the boundary γ_b; the most important one is

$$H^{1/2}_1(\gamma_b) = \text{trace of } H^1_1(\omega) \text{ on } \gamma_b = \text{trace of } V^1_1(\omega) \text{ on } \gamma_b.$$

A.3.3 Meridian electromagnetic spaces

These are spaces of two-dimensional vector fields. The cylindrical $\underline{\text{curl}}$ and $\underline{\text{div}}$ operators are defined in §9.2.3.

$$\mathbf{H}(\underline{\text{div}}, \omega) = \left\{\mathbf{u} \in \mathbf{L}^2_1(\omega) : \underline{\text{div}}\, \mathbf{u} \in L^2_1(\omega)\right\},$$
$$\mathbf{H}(\underline{\text{div}}\, \xi, \omega) = \left\{\mathbf{u} \in \mathbf{L}^2_1(\omega) : \underline{\text{div}}(\xi\, \mathbf{u}) \in L^2_1(\omega)\right\},$$

$$\begin{aligned}
\mathbf{H}_\diamond(\underline{\mathrm{div}}\,\xi,\omega) &= \{\mathbf{u}\in\mathbf{H}(\underline{\mathrm{div}}\,\xi,\omega) : \mathbf{u}\cdot\boldsymbol{\nu}=0 \text{ on } \gamma_b\}\ ;\\
\mathbf{H}(\underline{\mathrm{curl}},\omega) &= \left\{\mathbf{u}\in\mathbf{L}^2_1(\omega) : \underline{\mathrm{curl}}\,\mathbf{u}\in L^2_1(\omega)\right\},\\
\mathbf{H}_\diamond(\underline{\mathrm{curl}},\omega) &= \{\mathbf{u}\in\mathbf{H}(\underline{\mathrm{curl}},\omega) : \mathbf{u}\cdot\boldsymbol{\tau}=0 \text{ on } \gamma_b\}\,.
\end{aligned}$$

These definitions can be extended to tensorial coefficients $\mathfrak{f}$, provided they have a block structure that separates the meridian and azimuthal components, i.e., $\begin{pmatrix} \bullet & \bullet & 0\\ \bullet & \bullet & 0\\ 0 & 0 & \bullet\end{pmatrix}$.

The "natural" spaces of two-dimensional fields are:

$$\begin{aligned}
\mathbf{X}_N(\omega;\varepsilon) &= \mathbf{H}_\diamond(\underline{\mathrm{curl}},\omega)\cap\mathbf{H}(\underline{\mathrm{div}}\,\varepsilon,\omega),\\
\mathbf{X}_T(\omega;\mu) &= \mathbf{H}(\underline{\mathrm{curl}},\omega)\cap\mathbf{H}_\diamond(\underline{\mathrm{div}}\,\mu,\omega),\\
\mathbf{X}_{N,A}(\omega;\varepsilon) &= \{\mathbf{u}\in\mathbf{H}(\underline{\mathrm{curl}},\omega)\cap\mathbf{H}(\underline{\mathrm{div}}\,\varepsilon,\omega) : \mathbf{u}\cdot\boldsymbol{\tau}_{|\gamma_b}\in L^2_1(\gamma_b),\ \mathbf{u}\cdot\boldsymbol{\tau}_{|\gamma_P}=0\},\\
\mathbf{X}_{T,A}(\omega;\mu) &= \{\mathbf{u}\in\mathbf{H}(\underline{\mathrm{curl}},\omega)\cap\mathbf{H}(\underline{\mathrm{div}}\,\mu,\omega) : \mathbf{u}\cdot\boldsymbol{\tau}_{|\gamma_b}\in L^2_1(\gamma_b),\ \mathbf{u}\cdot\boldsymbol{\nu}_{|\gamma_P}=0\}.
\end{aligned}$$

Above, γ_P is the two-dimensional section of Γ_P, the perfectly conducting part of the boundary. "Regularised" spaces are $\mathbf{X}^{\mathrm{reg}}(\omega)=\mathbf{X}(\omega)\cap\mathcal{H}^1(\omega)$. The letters $\mathbf{K}$ and $\mathbf{Z}$ ("kernels" and "zeros") designate spaces of fields with vanishing $\underline{\mathrm{div}}$, respectively $\underline{\mathrm{div}}$ and $\underline{\mathrm{curl}}$.

A.3.4 Transversal spaces

The counterparts of the previous two sections in the prismatic setting are much simpler. The Lebesgue and Sobolev spaces defined in the transversal section are the usual ones. The electromagnetic spaces are (with the transversal div and curl of §9.2.3):

$$\begin{aligned}
\mathbf{H}(\mathrm{div},\omega) &= \left\{\mathbf{u}\in\mathbf{L}^2(\omega) : \mathrm{div}\,\mathbf{u}\in L^2(\omega)\right\},\\
\mathbf{H}(\mathrm{div}\,\xi,\omega) &= \left\{\mathbf{u}\in\mathbf{L}^2(\omega) : \mathrm{div}(\xi\,\mathbf{u})\in L^2(\omega)\right\},\\
\mathbf{H}_0(\mathrm{div}\,\xi,\omega) &= \{\mathbf{u}\in\mathbf{H}(\mathrm{div}\,\xi,\omega) : \mathbf{u}\cdot\boldsymbol{\nu}=0 \text{ on } \gamma\}\ ;\\
\mathbf{H}(\mathrm{curl},\omega) &= \left\{\mathbf{u}\in\mathbf{L}^2(\omega) : \mathrm{curl}\,\mathbf{u}\in L^2(\omega)\right\},\\
\mathbf{H}_0(\mathrm{curl},\omega) &= \{\mathbf{u}\in\mathbf{H}(\mathrm{curl},\omega) : \mathbf{u}\cdot\boldsymbol{\tau}=0 \text{ on } \gamma\}\ ;\\
\mathbf{X}_N(\omega;\varepsilon) &= \mathbf{H}_0(\mathrm{curl},\omega)\cap\mathbf{H}(\mathrm{div}\,\varepsilon,\omega),\\
\mathbf{X}_T(\omega;\mu) &= \mathbf{H}(\mathrm{curl},\omega)\cap\mathbf{H}_0(\mathrm{div}\,\mu,\omega),\\
\mathbf{X}_{N,A}(\omega;\varepsilon) &= \{\mathbf{u}\in\mathbf{H}(\mathrm{curl},\omega)\cap\mathbf{H}(\mathrm{div}\,\varepsilon,\omega) : \mathbf{u}\cdot\boldsymbol{\tau}_{|\gamma}\in L^2(\gamma),\ \mathbf{u}\cdot\boldsymbol{\tau}_{|\gamma_P}=0\},\\
\mathbf{X}_{T,A}(\omega;\mu) &= \{\mathbf{u}\in\mathbf{H}(\mathrm{curl},\omega)\cap\mathbf{H}(\mathrm{div}\,\mu,\omega) : \mathbf{u}\cdot\boldsymbol{\tau}_{|\gamma}\in L^2(\gamma),\ \mathbf{u}\cdot\boldsymbol{\nu}_{|\gamma_P}=0\}.
\end{aligned}$$

Kernels are defined as in §§A.2.3 and A.3.3.

A.4 Spaces measuring time regularity

Generally speaking, time-dependent fields are considered as functions of time with values in a functional space on Ω (or ω, Γ, γ, etc.); and $f(t)$ denotes the

function $\boldsymbol{x} \mapsto f(t, \boldsymbol{x})$. Thus, if I is a (time) interval and X a Banach space on Ω, one defines, as usual, the spaces $C(I; X)$, $C^m(I; X)$. If $I =]0, T[$ is open, one defines

$$\begin{aligned}
\mathcal{D}'(]0,T[\,;X) &= \{\text{linear mappings on } \mathcal{D}(]0,T[) \text{ with values in } X\}.\\
L^p(0,T;X) &= \left\{ f : \int_0^T \|f(t)\|_X^p \, d\boldsymbol{x} < \infty \right\}, \quad 1 \le p < \infty\,,\\
L^\infty(0,T;X) &= \{f \text{ bounded on }]0,T[\text{with values in } X\}\ ;\\
H^s(0,T;X) &= \left\{ f \in L^2(0,T;X) : \partial_t^\ell f \in L^2(0,T;X),\ 0 \le \ell \le s \right\}, \quad s \in \mathbb{N},\\
W^{s,p}(0,T;X) &= \left\{ f \in L^p(0,T;X) : \partial_t^\ell f \in L^p(0,T;X),\ 0 \le \ell \le s \right\}, \quad s \in \mathbb{N}\,;
\end{aligned}$$

and so on...

Index

absence of magnetic monopoles, 3, 4
Ampère's law, 3, 4
approximate model, 36
asymptotic analysis, 243
attenuation factor, 21
axisymmetric
  domain, 77, 325
  fully ... model, 329
  operator, 332
  scalar field, 336
  vector field, 336

Babuska-Brezzi theorem, 149
Banach space, 137
Banach-Necas-Babuska theorem, 147
Banach-Schauder theorem, 139
Boltzmann equation, 26
boundary
  Lipschitz, 75
  pseudo-Lipschitz, 111
boundary condition, 49
  absorbing (ABC), 49, 53
  absorbing (ABC, 2nd order), 251
  diffuse reflection, 366
  emission-absorption, 367
  entry, 370
  exit, 374
  impedance, 51
  incoming flux, or inflow, 366
  perfect conductor, 50
  perfect conductor (2nd order), 250
  Silver-Müller, 54, 324
  specular reflection, 366
  transparent, 53

Cartesian coordinate system, 42
Cartesian first-order operator, 42, 86
  two-dimensional, 339
Cauchy-Schwarz inequality, 138
causality principle, 6
cavity problem, 183, 256, 294, 299, 305
  magnetohydrodynamics (MHD), 388
charge conservation equation, 3, 4
charge density, 3, 26
closed graph theorem, 139
computational domain, 52
conductivity, 13
  Spitzer, 33
conductor, 13
constitutive relation, 5
  dispersive response, 7
  optical response, 7
contravariance by rotation
  vector fields, 331
Coulomb gauge, 12
Coulomb's law, 9
Curie principle, 338
curl (operator), 42
  Cartesian (2D), 339
  cylindrical, 326, 339
  tangential, 55, 106
curl-free field, 90, 110, 113, 117, 210, 224, 237
  regularity, 120
current density, 3, 26
cylindrical coordinate system, 325

cylindrical first-order operator, 339

Darwin model, 40, 241
decomposition of vector field, 104, 108, 110, 135, 136, 217, 218, 226, 230, 231, 278, 309, 314
dielectric (medium), 14
diffraction, 52, 186, 307, 319
dimensionally reduced model
  Maxwell's equation, 323
  Vlasov equation, 367
dispersion relation, 19
distribution, 71
  convergence, 71
  derivative, 71, 72
  vector, 98
  weak-star topology, 71
divergence (operator), 41
  Cartesian (2D), 339
  cylindrical, 339
  tangential, 5, 105
divergence-free field, 90, 117, 121, 125, 130, 210, 224, 237, 369
  regularity, 120
domain, 69, 76
  axisymmetric, 77, 325
  computational, 52
  curved polyhedron, 69, 77
  curvilinear polygon, 77
  partition of, 81
  prismatic, 327
    periodic setting, 328
domain (physical framework), 2
double orthogonality, 159
duality bracket, 71, 74

eigenmode, 47
  electric, 296
  electromagnetic, 298
  magnetic, 298
eigenvalue problem or eigenproblem, 17, 174, 295, 297
electric displacement, 3
electric eigenmode, 296
electric energy, 218
electric field, 3
electric permittivity, 7
electric quasi-static model, 38, 238
electromagnetic eigenmode, 298
electromagnetic energy
  conservation, 62, 64, 182, 183, 185
  density, 63
  flux, 63
  total, 63
electromagnetic field, 2
  complex-valued, 15
electrostatic energy, 65
electrostatic field, 35
electrostatic model, 35, 235
  two-dimensional, 342
electrostatic potential, 35
energy
  electric, 218
  electromagnetic, 62–64, 182, 183, 185
  electrostatic, 65
  magnetic, 231
  magnetostatic, 66
  self-, 65
energy conservation, 48, 182
energy inequality, 255
equation
  Boltzmann, 26
  charge conservation, 3, 4
  Helmholtz, 17
  Liouville, 24
  Maxwell, 3, 4, 16
  Maxwell (2nd order), 249
    augmented, 273
    mixed, 276
    mixed augmented, 279
    mixed unaugmented, 276
  Poisson, 35
  Vlasov, 27, 28, 365
  wave (scalar and vector), 12, 45, 59, 250, 344
exterior problem, 52, 182
  truncated, 53, 186

Faraday's law, 3, 4
fixed frequency problem, 16, 170
fluid model, 25
force
  Lorentz, 23
form
  coercive, 146
  inf-sup condition for, 148
  sesquilinear, 144
  solvability condition for, 146

stability condition for, 146
$\mathbb{T}$-coercive, 147
weak stability condition for, 151
weakly $\mathbb{T}$-coercive, 151
Fourier transform, 73
Fredholm alternative, 142
free vibration, 17, 294
frequency, 14, 15
fully axisymmetric model, 329
function space
$C^m([0,T];\cdot)$, 97
$H^1(\cdot)$, 72
$H^s(\cdot)$, 72, 73, 79, 82, 104
$H_0^s(\cdot)$, 74
$H^{-s}(\cdot)$, 74
$L^2(0,T;\cdot)$, 97
$L^2(\cdot)$, 70, 82
$L^p(\cdot)$, 70
$\boldsymbol{H}(\mathrm{div},\cdot)$, 87
$\boldsymbol{H}(\mathrm{div}\,\mathfrak{t},\cdot)$, 87
$\boldsymbol{H}(\mathbf{curl},\cdot)$, 87
$\boldsymbol{H}(\mathbf{curl}\,\mathfrak{t},\cdot)$, 87
$\boldsymbol{H}_0(\mathrm{div},\cdot)$, 89
$\boldsymbol{H}_0(\mathbf{curl},\cdot)$, 89
$\boldsymbol{L}^2(\cdot)$, 87
$\widetilde{H}^s(\cdot)$, 75

gauge condition
Coulomb, 12
Lorentz, 12
physical, 12
Gauss's law, 3, 4
gradient (operator), 41
Cartesian (2D), 339
cylindrical, 326, 339
tangential, 55, 104
graph norm, 139
Green's formula, 91, 92, 95, 109, 110
Gronwall's Lemma, 256
group velocity, 19, 21

Hardy-Sobolev-Littlewood inequality, 379
Helmholtz decomposition, 39, 135, 136, 217, 230, 278, 314
Helmholtz equation, 17
Hilbert space, 137
Hille-Yosida theorem, 152, 153
hydrodynamical variable, 30

imbedding theorem
basic, 74, 75
compactness, 80, 124, 129, 283–285, 292, 293, 319, 396
impedance, 51
indicator function, 70
inequality
Cauchy-Schwarz, 138
energy, 255
Hardy-Sobolev-Littlewood, 379
Poincaré, 78, 85
Poincaré-Wirtinger, 78
Weber, 123, 127, 212, 226
inf-sup condition, 148
initial condition, 10, 45, 152, 154
compatible, 376
insulator, 14
interface, 86, 95, 96
interior problem, 52, 182
truncated, 53, 187, 262
interpolation theory
interpolated bounded operator, 144
interpolated Hilbert space, 143
invariance by translation or rotation
differential operator, 332
scalar or vector field, 331
isomorphism, 138

jump, 86, 95, 96

kinetic model, 25
Kramers-Kronig relation, 22

Lagrangian, 62, 148
Laplace (operator), 42
cylindrical, 327
Laplace-Beltrami (operator), 108
singular solution, 189
Laplacian, 42
law
absence of magnetic monopoles, 3, 4
Ampère, 3, 4
Coulomb, 9
Faraday, 3, 4
Gauss, 3, 4
Ohm, 13, 33
Lax-Milgram theorem, 146
least action principle, 62
limiting amplitude principle, 15, 319

Lions-Magenes theorem, 157
Liouville equation, 24
Lipschitz boundary, 75
Lorentz force, 23
Lorentz gauge, 12
Lorentz model, 22
low frequency approximation, 38

magnetic eigenmode, 298
magnetic energy, 231
magnetic field, 3
magnetic induction, 3
magnetic permeability, 7
magnetic quasi-static model, 39, 240
magnetohydrodynamics (MHD) model, 33, 387
magnetostatic energy, 66
magnetostatic field, 36
magnetostatic model, 36, 236
  two-dimensional, 343
Maxwell's equation
  classification, 44
  differential, 4
  integral, 3
  static, 35
  time-dependent (2nd order), 249
    two-dimensional, 343
  time-harmonic, 16
  transverse electric mode, 341
  transverse magnetic mode, 342
Maxwellian distribution, 384
mechanical description, 24
medium
  anisotropic, 7
  bi-anisotropic, 7
  chiral, 5, 7
  conductor, 13
  dielectric, 14
  dissipative, 21
  homogeneous, 5, 8
  inhomogeneous, 5, 7
  insulator, 14
  isotropic, 7
  linear, 6, 7
  non-dispersive, 7, 22
  perfect, 5, 7
  perfect conductor, 14
  resistive, 14
meridian half-plane, 325
model
  approximate, 36
  Darwin, 40, 241
  dimensionally reduced, 323, 367
  electric quasi-static, 38, 238
  electrostatic, 35, 235
    two-dimensional, 342
  fluid, 25
  fully axisymmetric, 329
  kinetic, 25
  Lorentz, 22
  magnetic quasi-static, 39, 240
  magnetohydrodynamics (MHD), 33, 387
  magnetostatic, 36, 236
    two-dimensional, 343
  plane, 329
  sign-changing coefficient, 313
  two-dimensional, 329
  Vlasov-Maxwell, 25, 367
  Vlasov-Poisson, 40, 367
modelling assumption, 63, 323, 329

Ohm's law, 13, 33
open mapping theorem, 139
operator (differential)
  axisymmetric, 332
  curl, 42
    Cartesian (2D), 339
    cylindrical, 326, 339
  divergence, 41
    Cartesian (2D), 339
    cylindrical, 326, 339
  gradient, 41
    Cartesian (2D), 339
    cylindrical, 326, 339
  Laplace, 42
    cylindrical, 327
  Laplace-Beltrami, 108
  tangential curl, 106
  tangential divergence, 105
  tangential gradient, 104
operator (unbounded), 138
  adjoint of, 141
  bounded, 138
  bounded compact, 138
  bounded Fredholm, 138
  bounded positive, 140
  bounded positive-definite, 140

closed, 138
continuous, 138
domain of, 138
maximal monotone, 140
monotone, 140
self-adjoint, 141
skew-adjoint, 141
symmetric, 141
Ostrogradsky formula, 4

Partial Differential Equation (PDE), 41
classification, 42, 44
elliptic, 44
hyperbolic, 44
parabolic, 44
vector, 44
partition, 81
pathological vertex, 191
perfect conductor, 14
perfectly matched layer (PML), 49, 57
phase space, 25
phase velocity, 18
plane model, 329
plane wave, 18, 21
incoming, 53
outgoing, 53
plasma, 29
Poincaré inequality, 78, 85
Poincaré-Wirtinger inequality, 78
Poisson equation, 35
polarization, 22
polygon, 76
curvilinear, 76
spherical curvilinear, 77
Poynting vector, 63
complex, 66
principle
causality, 6
Curie, 338
least action, 62
limiting amplitude, 15, 319
superposition, 47
time-invariance, 6
unique continuation, 312
problem
cavity, 183, 256, 294, 299, 305
eigenvalue, 17, 174, 295, 297
exterior, 52, 53, 182, 186
fixed frequency, 16, 170
interior, 52, 53, 182, 187, 262
unknown frequency, 17, 170
well-posed, 10, 145, 151
pseudo-Lipschitz boundary, 111
pulsation, 15

radiation condition, 49, 57
Silver-Müller, 60
reduced model, 323
regular-gradient splitting, 134, 219, 232
relation
constitutive, 5
dispersion, 19
Kramers-Kronig, 22
resistivity, 13
resolvent, 139
resonance, 46
in plasma, 321
Riesz theorem, 144

saddle-point, 148
scalar field, 41
axisymmetric, 336
scalar potential, 11
extraction, 113, 116, 217
scaling, 36, 243
self-energy, 65
semi-group theory, 152
sign-changing coefficient model, 313
Silver-Müller boundary condition, 54, 324
Silver-Müller radiation condition, 60, 320
skin depth, 14, 21
skin effect, 14
infinite, 14
solution
mild, 371
renormalised, 371
strong, 152, 382
weak, 156
Sommerfeld condition, 59
spectral theorem, 142
spectrum, 139
continuous spectrum, 139
point spectrum, 139
residual spectrum, 139
speed of light, 8
Spitzer conductivity, 33

stability condition, 10, 146
statistical description, 24
Stokes formula, 4
Stone theorem, 154
strong solution, 152, 382
subset of $\mathbb{R}^n$
  categories (C1), (C2), (C3), 69
  domain, 76
  simply connected, 111, 348
  topologically trivial, 111, 348
superposition principle, 47
sustained vibration, 17, 299
symmetry assumption, 323, 329
symmetry by translation or rotation
  differential or boundary operator, 332
  scalar or vector field, 336

theorem
  Babuska-Brezzi, 149
  Banach-Necas-Babuska, 147
  Banach-Schauder, 139
  closed graph, 139
  Hille-Yosida, 152, 153
  imbedding, 74, 75, 80, 124, 129, 283–285, 292, 293, 319, 396
  Lax-Milgram, 146
  Lions-Magenes, 157
  open mapping, 139
  Riesz, 144
  spectral, 142
  Stone, 154
  trace, 84, 93, 94, 102, 103, 105, 107, 109, 110, 370
time-invariance principle, 6
trace mapping
  ... γ_0, 84
  ... γ_1, 93
  normal ... γ_n, 93
  tangential ... $\gamma_\top$, 94
  tangential components ... $\pi_\top$, 102
trace theorem, 84, 93, 94, 102, 103, 105, 107, 109, 110, 370
two-dimensional model, 329

unique continuation principle, 312
unknown frequency problem, 17, 170

variational formulation, 144, 145
  constrained (mixed), 147
  time-dependent, 157
vector field, 41
  axisymmetric, 336
  azimuthal component, 326
  longitudinal component, 327
  meridian component, 326
  transversal component, 327
vector potential, 11
  extraction, 121, 126, 130, 133
Vlasov equation, 27, 28, 365
Vlasov-Maxwell model, 25, 367
Vlasov-Poisson model, 40, 367

wave equation
  scalar, 12, 59, 344
  vector, 12, 45, 250
wave number, 18
wavelength, 18
weak convergence, 141
weak solution, 156
Weber inequality, 123, 127, 212, 226
well-posed problem, 10
  Fredholm sense, 151
  Hadamard sense, 145