HAL
open science

Stream Ciphers: A Practical Solution for Efficient Homomorphic-Ciphertext Compression

Anne Canteaut, Sergiu Carpov, Caroline Fontaine, Tancrède Lepoint, María Naya-Plasencia, Pascal Paillier, Renaud Sirdey

To cite this version:

Anne Canteaut, Sergiu Carpov, Caroline Fontaine, Tancrède Lepoint, María Naya-Plasencia, et al.. Stream Ciphers: A Practical Solution for Efficient Homomorphic-Ciphertext Compression. CryptoAction Symposium 2016, Apr 2016, Budapest, Hungary. hal-01401328

HAL Id: hal-01401328

https://inria.hal.science/hal-01401328v1

Submitted on 23 Nov 2016

HAL is a multi-disciplinary open access archive for the deposit and dissemination of scientific research documents, whether they are published or not. The documents may come from teaching and research institutions in France or abroad, or from public or private research centers.

L'archive ouverte pluridisciplinaire **HAL**, est destinée au dépôt et à la diffusion de documents scientifiques de niveau recherche, publiés ou non, émanant des établissements d'enseignement et de recherche français ou étrangers, des laboratoires publics ou privés.

Stream ciphers: A Practical Solution for Efficient Homomorphic-Ciphertext Compression

Anne Canteaut, Sergiu Carpov, Caroline Fontaine, Tancrède Lepoint, María Naya-Plasencia, Pascal Paillier, Renaud Sirdey

Inria Paris, CEA LIST, CNRS, Telecom Bretagne and UEB, CryptoExperts (France)

CryptoAction Symposium, Budapest, April 2016

Motivation

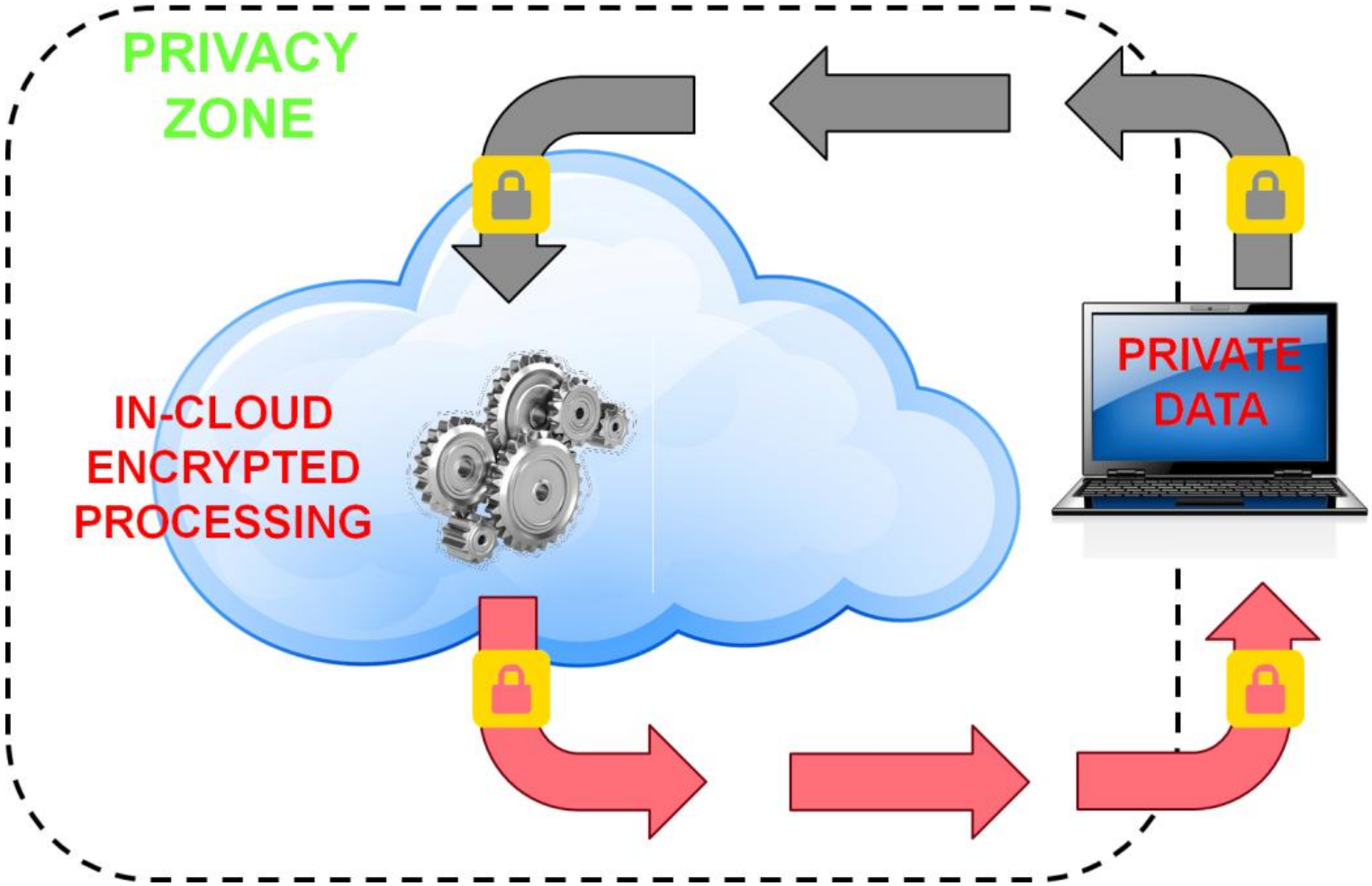

Homomorphic encryption

$$\mathsf{HE}_{\mathsf{pk}}(f(x)) = \mathsf{HE.Eval}_f(\mathsf{HE}_{\mathsf{pk}}(x))$$

Typical ciphertext expansion: 200 kBytes for encrypting a single bit

Optimizing communication using symmetric encryption [Naehrig et al. 11]

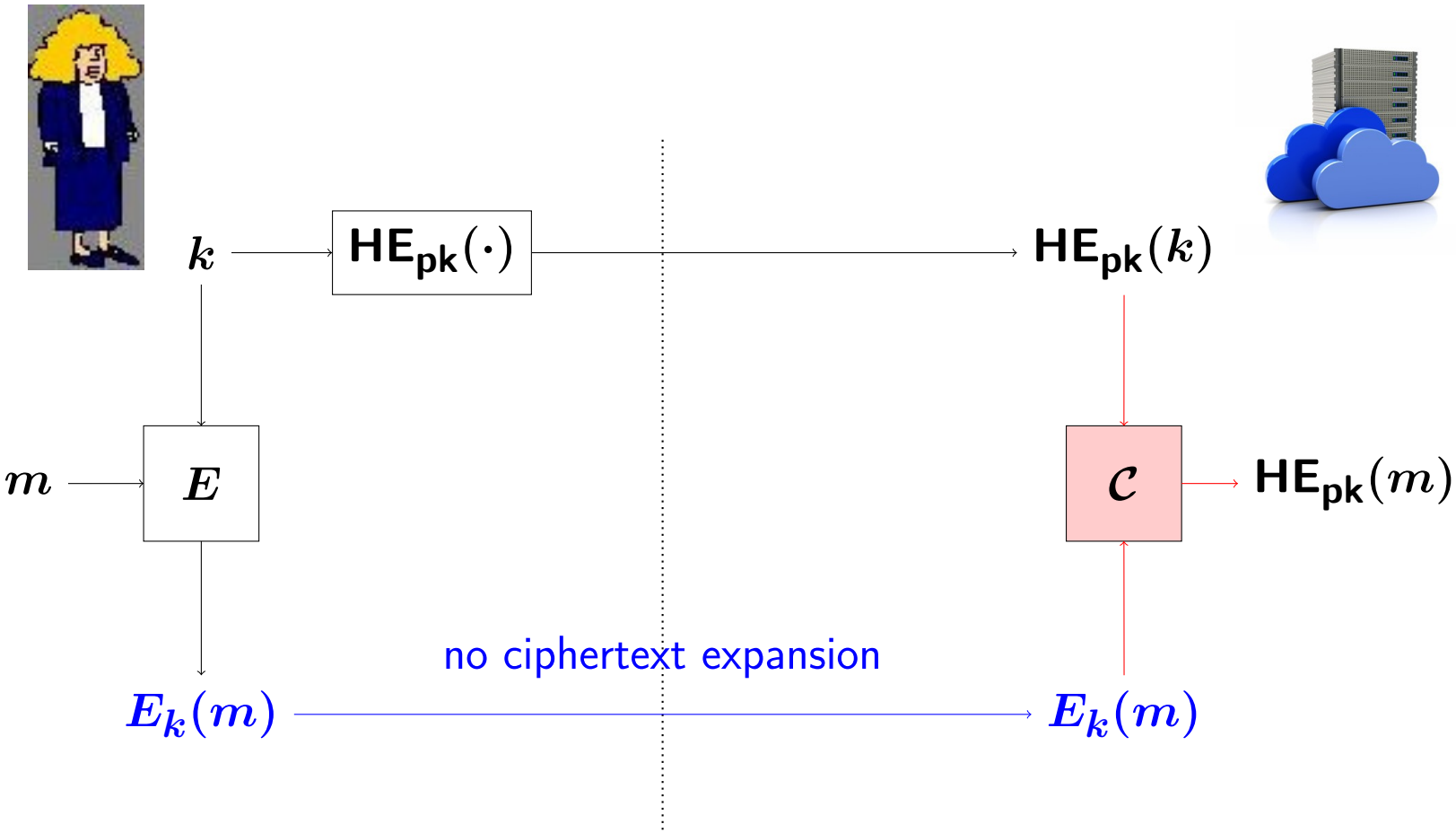

$$\mathcal{C} = \mathsf{HE.Eval}_{E^{-1}}$$

Question: What kind of symmetric encryption is the most appropriate?

Prior HE-friendly ciphers

Aim:

Minimize the multiplicative depth of the decryption function.

Concrete proposals:

- Optimized implementations of AES [Gentry Halevi Smart 12][Cheon et al. 13] [Döroz Hu Sunar 14]
- Lightweight block ciphers: SIMON [Lepoint Naehrig 14], PRINCE [Doröz et al.14]
- Dedicated block cipher: Low-MC [Albrecht et al. 15]

Outline

1. Revisiting the whole encryption scheme
2. Trivium and Kreyvium in the HE setting
3. Experimental results

Ciphertext decompression with IV-based encryption

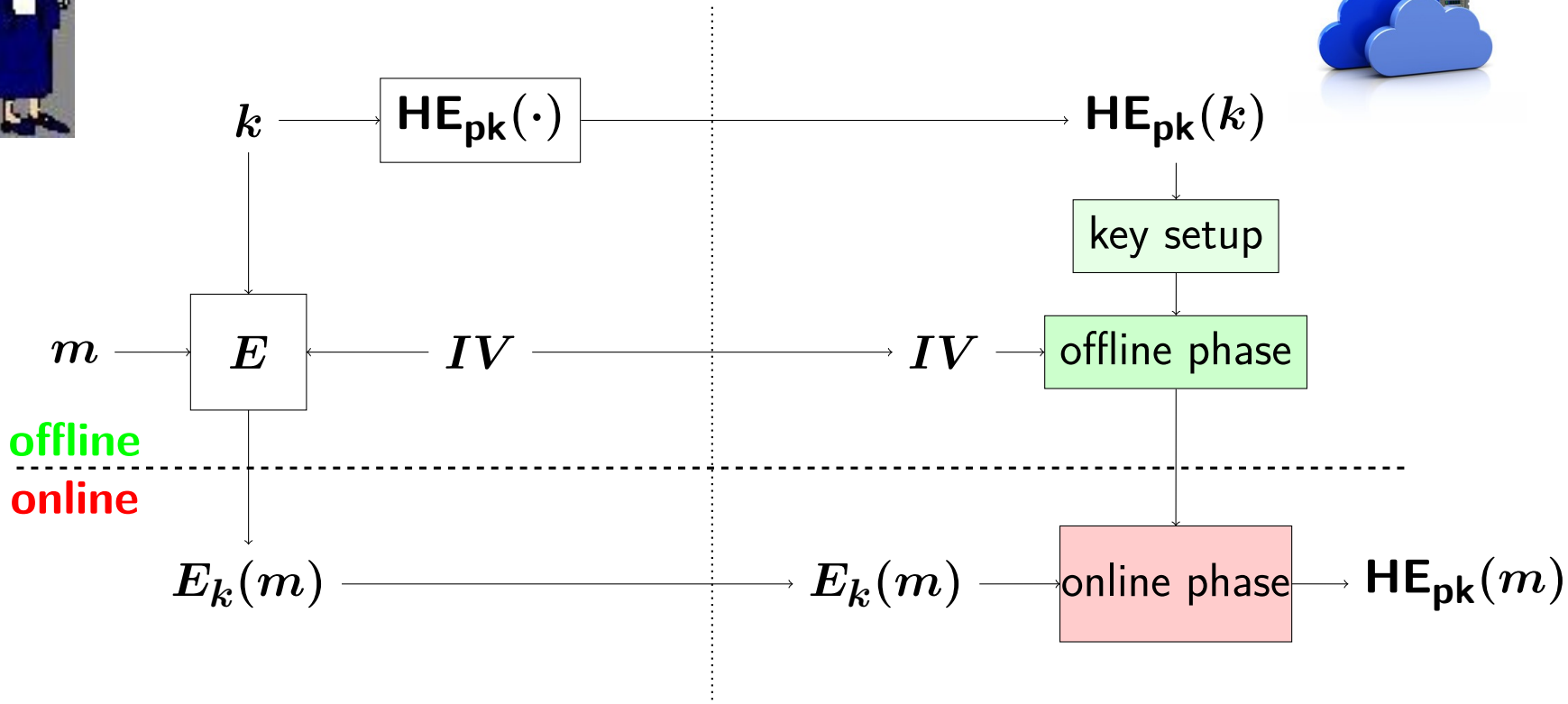

$\rightarrow$ Reduce the online phase to a minimum.

With an additive stream cipher

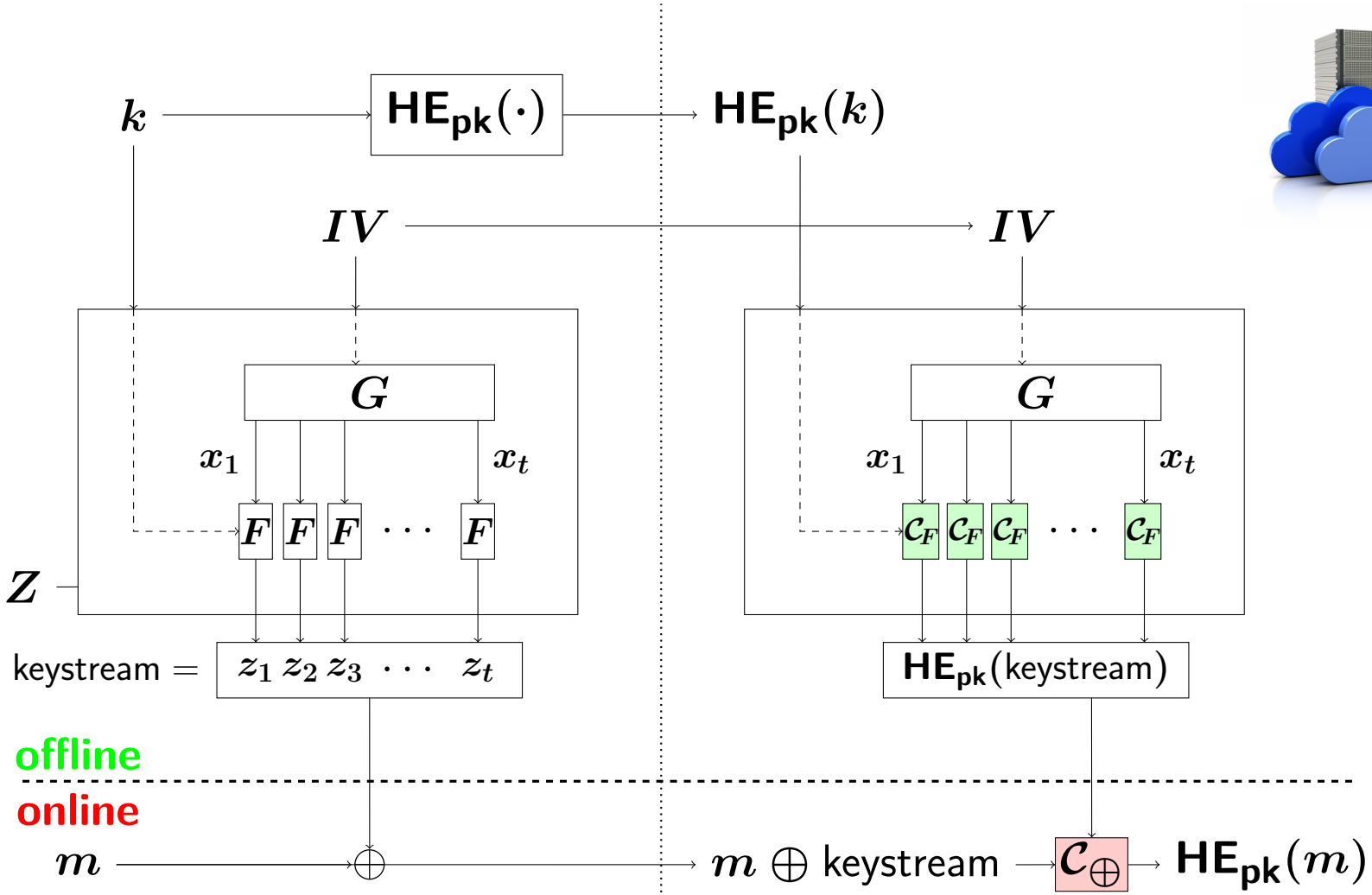

$\rightarrow$ Minimize the multiplicative depth of F.

Instantiation with a counter

Expansion function G:

$$G(IV) = (IV,\ IV \boxplus 1,\ IV \boxplus 2, \ldots, IV \boxplus (t-1))$$

Why not use for F a block cipher?

security limited to $2^{n/2}$ where n is the block size.

$\rightarrow$ strong limitation for lightweight ciphers with $n = 64$ or 32.

Low-depth keystream geneartor

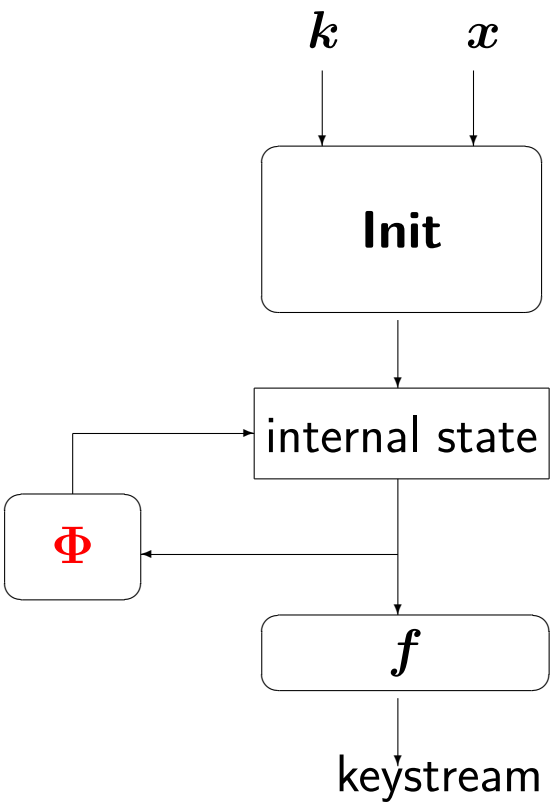

- We need a transition function Φ with a low multiplicative depth.
- No strong limitation of the size of the internal state.

Trivium and Kreyvium

two low-depth stream ciphers

Trivium [De Cannière Preneel 08]

recommended by the eSTREAM project

- transition function with degree 2
- key size $=$ 80 bits
- IV size $=$ 80 bits
- initialization $=$ 1152 blank rounds

Trivium [De Cannière Preneel 08]

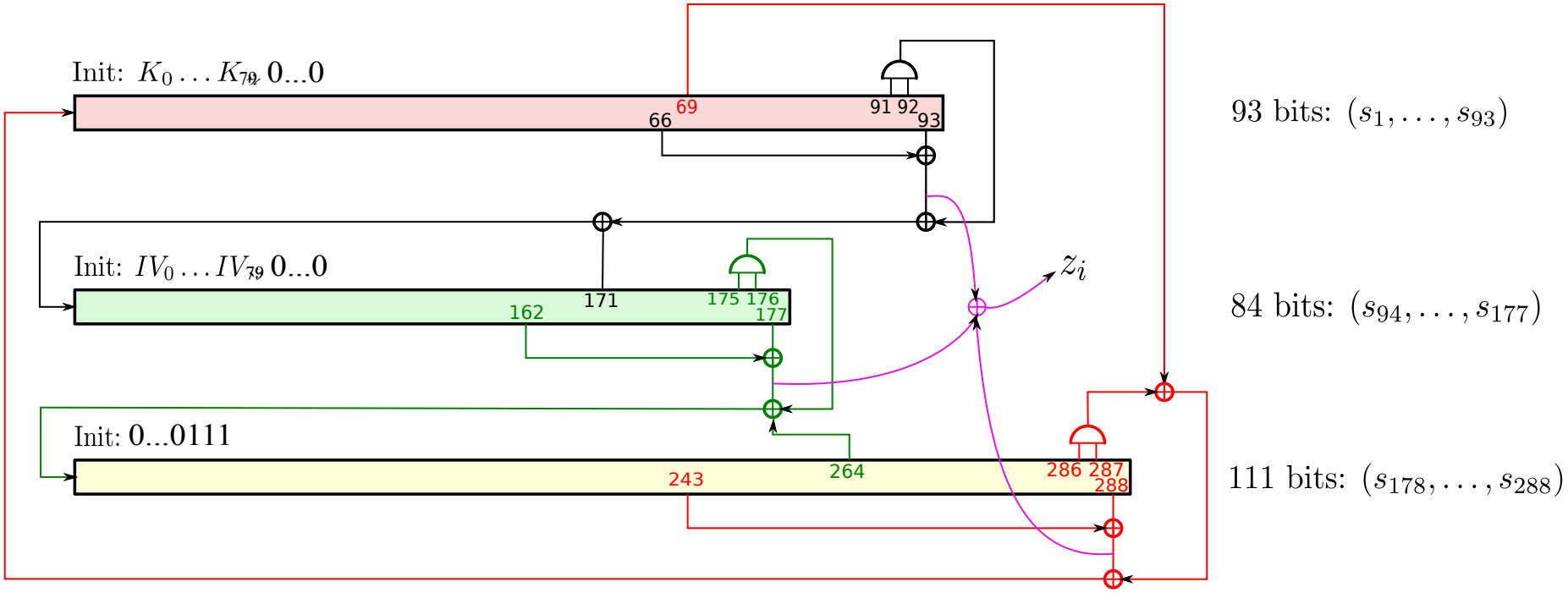

Multiplicative depth of Trivium

The keystream length which can be produced with a circuit of depth d, $d \geq 4$, is

$$282 \times \left\lfloor \frac{d}{3} \right\rfloor + \begin{cases} 81 & \text{if } d \equiv 0 \bmod 3 \\ 160 & \text{if } d \equiv 1 \bmod 3 \\ 269 & \text{if } d \equiv 2 \bmod 3 \end{cases}$$

- At depth 12, 57 bits
- At depth 13, 136 bits

Kreyvium, a 128-bit version of Trivium

key size = IV size = 128 bits

Increasing the size of the internal state.

- no cost if the additionnal part is updated linearly
- better resistance to TMDTO attacks and to algebraic attacks if the additionnal part contains some secret material

$\rightarrow$ the 128-bit key and the 128-bit IV are added to the internal state

Size of the internal state = 544 bits (416 are unknown)

Kreyvium

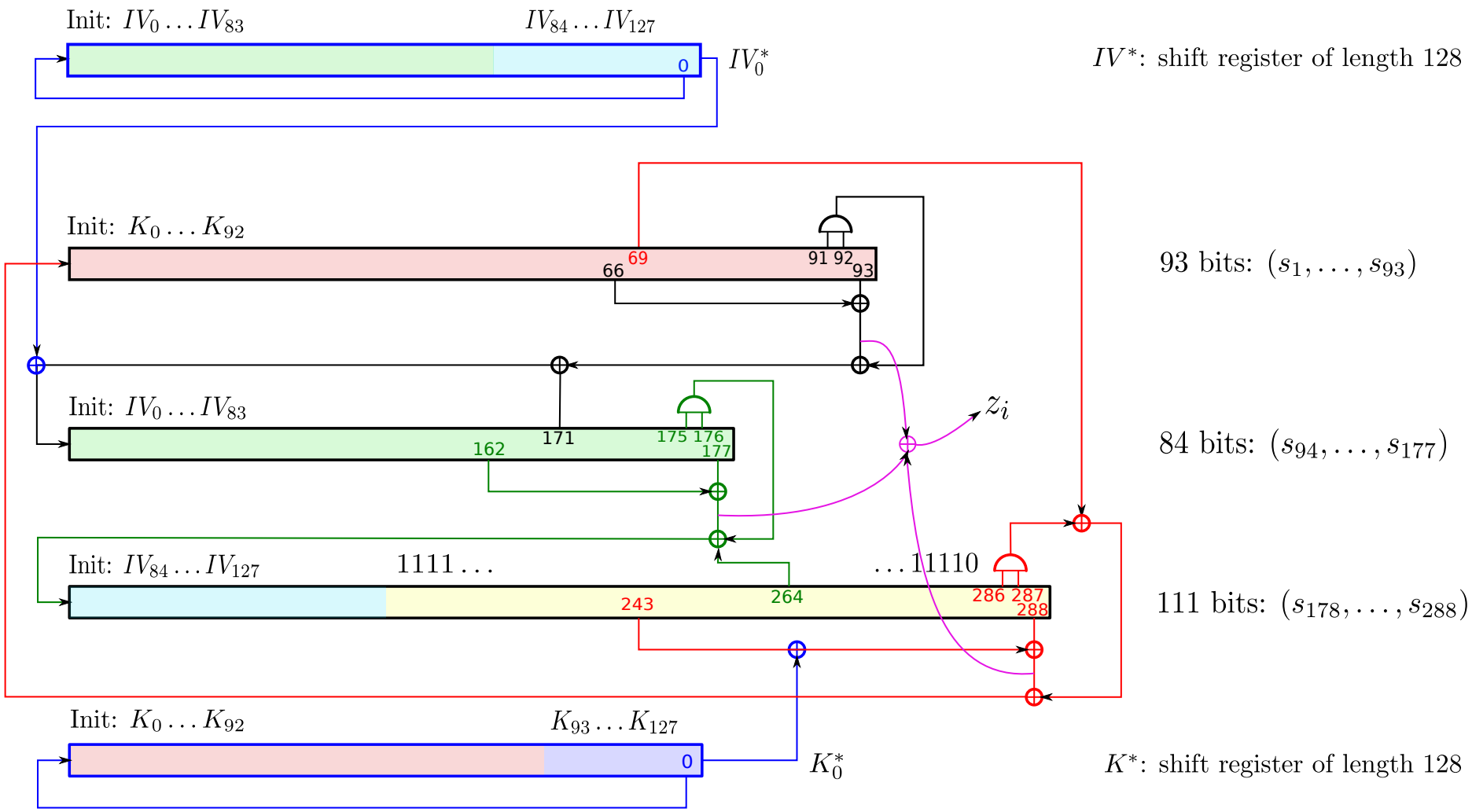
Init: $IV_0 \ldots IV_{83}$
$IV_{84} \ldots IV_{127}$
0
IV_0^*
IV^*: shift register of length 128
Init: $K_0 \ldots K_{92}$
66
69
91 92
93
93 bits: $(s_1, \ldots, s_{93})$
Init: $IV_0 \ldots IV_{83}$
162
171
175 176
177
z_i
84 bits: $(s_{94}, \ldots, s_{177})$
Init: $IV_{84} \ldots IV_{127}$
1111 ...
... 11110
243
264
286 287
288
111 bits: $(s_{178}, \ldots, s_{288})$
Init: $K_0 \ldots K_{92}$
$K_{93} \ldots K_{127}$
0
K_0^*
K^*: shift register of length 128

Multiplicative depth of Kreyvium

The keystream length which can be produced with a circuit of depth d, $d \geq 4$, is

$$282 \times \left\lfloor \frac{d}{3} \right\rfloor + \begin{cases} 70 & \text{if } d \equiv 0 \bmod 3 \\ 149 & \text{if } d \equiv 1 \bmod 3 \\ 258 & \text{if } d \equiv 2 \bmod 3 \end{cases}$$

$\rightarrow$ 11 bits less than with Trivium

- At depth 12, 46 bits
- At depth 13, 125 bits

Some security arguments

Internal state collision:

the number of keystream bits generated from the same key/IV pair must be less than $\mathbf{2^{144}}$.

Algebraic attacks [Maximov Biryukov 07]:

every relation corresponding to a keystream bit introduces a new unknown in the system.

Cube testers [Dinur Shamir 09][Aumasson et al. 09][Fouque Vannet 13]:

two additional XORs per round $\rightarrow$ better mixing of the variables

Conditional differential cryptanalysis [Knellwolf et al. 11]

even in the weak-key setting, 64 bits can never be set to 0

Experimental results

Using HElib (on one core of a server with 4 x AMD Opteron 6172 processors)

	security level	N	used depth	#slots	latency (sec.)	throughput (bits/min)
Trivium-13	80	136	13	600	3650	1341
			20	720	11380	516
Kreyvium-13	128	125	13	682	3987	1272
			20	480	12451	287
LowMC-128	? ≤ 118	256	13	682	3369	3109
			20	480	9977	739

Using the Fan-Vercauteren scheme on a 48-core server

	security level	N	used depth	throughput (bits/min)		Speed gain
				1 core	48 cores	
Trivium-13	80	136	13	9.2	240	$\times$ 26.2
			20	3.4	106	$\times$ 31.0
Kreyvium-13	128	125	13	5.7	151	$\times$ 26.5
			20	2.2	77	$\times$ 34.0
LowMC-128	? ≤ 118	256	14	10.0	90	$\times$ 9.0
			21	4.6	47	$\times$ 10.2

Conclusions

- IV-based stream ciphers are the most appropriate ciphers.
- Good performances can be obtained with firmly-established symmetric ciphers.

Open question.

How many multiplicative levels are necessary to achieve a reasonable security level?
$\rightarrow$ (impractical) approach based on discrete-log achieving a multiplicative depth of $(\lceil \log \kappa \rceil + 1)$ for κ-bit security.