HAL
open science

Boundary nevanlinna-pick interpolation with prescribed peak points. Application to impedance matching

Laurent Baratchart, Martine Olivi, Fabien Seyfert

To cite this version:

Laurent Baratchart, Martine Olivi, Fabien Seyfert. Boundary nevanlinna-pick interpolation with prescribed peak points. Application to impedance matching. 2016. hal-01377782v1

HAL Id: hal-01377782

https://inria.hal.science/hal-01377782v1

Preprint submitted on 7 Oct 2016 (v1), last revised 6 Jan 2017 (v2)

HAL is a multi-disciplinary open access archive for the deposit and dissemination of scientific research documents, whether they are published or not. The documents may come from teaching and research institutions in France or abroad, or from public or private research centers.

L'archive ouverte pluridisciplinaire **HAL**, est destinée au dépôt et à la diffusion de documents scientifiques de niveau recherche, publiés ou non, émanant des établissements d'enseignement et de recherche français ou étrangers, des laboratoires publics ou privés.

BOUNDARY NEVANLINNA-PICK INTERPOLATION WITH PRESCRIBED PEAK POINTS. APPLICATION TO IMPEDANCE MATCHING.

LAURENT BARATCHART *, MARTINE OLIVI †, AND FABIEN SEYFERT ‡

Abstract

We study a generalized Nevanlinna Pick interpolation problem on the half-plane for rational functions of prescribed degree, where peak points are imposed and interpolation conditions may lie on the real axis. This generalizes previous work by T. Giorgiou, C. Byrnes, A Lindquist and A. Megretski. The problem is motivated by the issue of broadband matching in electronics and microwave system design. We prove existence and uniqueness of a solution by differential-topological techniques. The approach is put to work numerically on a real example, using a continuation method.

1. Introduction. Nevanlinna-Pick interpolation is a classical topic from function theory that has undergone several generalizations and enjoys deep connections with circuits and systems theory. In its original form, the problem consists in finding a Schur function to meet a finite set of interpolation conditions on the disk or the half-plane; here and below, a Schur function is a complex analytic function bounded by 1 in modulus. This kind of interpolation owns attractive necessary and sufficient conditions for a solution to exist (the non-negativity of the so-called Pick matrix), along with a parametrization of all solutions by Schur functions (the so-called Nevanlinna parametrization) [21, Ch. I, sec. 2, Ch. IV, sec. 6]. Composing with a conformal map, the problem can equivalently be stated in terms of Carathéodory functions, that is, analytic functions with non-negative real part. The theory has been extended in various directions including meromorphic, multiply connected, multivariable, operator-valued and non-commutative settings, as well as boundary interpolation, see *e.g.* [1, 2, 4, 8, 7, 6, 17, 18, 35, 3, 38]. Meantime, the links of such interpolation problems to sensitivity minimization and model matching, initially stressed in [36, 19], started a success story in robust control of linear systems, see *e.g.* [28, 29, 30, 31, 40] and the survey in [5].

Still, the relevance of Nevanlinna-Pick interpolation to Engineering problems had been pointed at earlier in a circuit-theoretic context, in relation with oscillator design, Darlington synthesis and broadband matching of dissipative devices [39, 13, 33]. In particular, the two issues of describing rational solutions of given degree and determining those of minimal degree were raised in [39]. Both turn out to be rather subtle. The second is still fairly open, but the first made substantial progress through the works [22, 14, 15, 23]. These show that if there are N interpolation conditions and the Nevanlinna-Pick matrix is positive definite, then rational Schur interpolants f of degree at most $N-1$ are essentially parametrized by the zeros of $1-ff^*$, a rational function of degree at most $2(N-1)$ which is positive on the boundary of the analyticity domain of f (the disk or the half-plane); here, f^* stands for the paraconjugate function (see definition in section 3). The stable zeros of $1-ff^*$ (so-called spectral zeros) may in turn be regarded (except in degenerate cases where cancellation occurs) as extra design parameters, see for example [26] where they are used to shape a robust feedback loop while bounding the degree of the controller. Since $f^* = \bar{f}$ on the boundary of the domain of analyticity, we note that if the spectral zeros lie on that boundary then they are maximum places for $|f|$ (*i.e.* places where $|f| = 1$), hereafter called *peak points* of f.

Motivated by the broadband matching problem for filters, we present in this work a still more general result where some or all interpolation points may lie *on* the boundary of the analyticity domain, and still the zeros of $1-ff^*$ essentially parametrize the interpolants. For example, given N interpolation points inside or on the boundary of the domain, and a polynomial r of degree at most $N-1$ which is nonzero at every interpolation point, then there is a continuously invertible correspondence between

*EPI-APICS, Inria, BP 93, Sophia-Antipolis cedex (Laurent.Baratchart@inria.fr, https://www-sop.inria.fr/members/Laurent.Baratchart/).

†EPI-APICS, Inria, BP 93, Sophia-Antipolis cedex (Martine.Olivi@inria.fr, https://www-sop.inria.fr/members/Martine.Olivi/).

‡EPI-APICS, Inria, BP 93, Sophia-Antipolis cedex (Fabien.Seyfert@inria.fr, https://www-sop.inria.fr/members/Fabien.Seyfert/).

sets of admissible interpolation values and polynomials p of degree at most $N-1$, the correspondence being that p/q meets the interpolation conditions with q the (normalized) stable polynomial such that $qq^* = pp^* + rr^*$. Moreover, along "most" paths between two sets of interpolation conditions, this correspondence is smoothly invertible. This allows us to tackle the problem numerically using continuation methods. Even when the interpolation points lie interior to the domain, this procedure is more efficient than minimizing entropy-like criteria as proposed in [14] (which are nevertheless interesting for themselves, see *e.g.* [26] for an application to model reduction).

The gist of our application to broadband matching for filters is that peak points at the ends of the bandwidth (*i.e.* zeros of r) will ensure selectivity of the filter, while appropriate interpolation conditions in the bandwidth will guarantee perfect match at designated frequencies. Once the location of the zeros and the interpolation points is chosen, the results of the present paper allow one to compute the transmission parameter of the filter (the unique Schur rational function meeting the interpolation conditions and having zeros as prescribed, of degree the number of interpolation conditions minus 1) from which the whole scattering matrix is easily deduced. A scattering matrix corresponding to a physical RLC network (*i.e.* one with with real elements R, L, C) is obtained upon using appropriate conjugate-symmetric interpolation conditions. Let us stress, however, that complex elements are common when modelling microwave devices, due to the use of a low-pass transformation. The degree constraint on the filter is here essential, for it should be kept as small as possible, while meeting given specifications, in order to contain unmodelled losses and keep the physical size small. In the experiments presented in Section 5, a numerical search is performed on the location of the interpolation points so as to minimize the maximum of the reflection over the bandwidth. This way the paper offers new avenues in broadband matching, which is today a critical step in circuit design as passbands grow larger and efficiency concerns more stringent.

In the above-mentioned problem, interpolation values are admissible if those corresponding to boundary interpolation points have modulus strictly less than 1 while those corresponding to interior interpolation points satisfy Pick's criterion. We also consider another interpolation problem where an additional interpolation condition is imposed on the boundary, whose value has modulus 1 (we do not prescribe the angular derivative, though); in this case solutions are seeked in degree $N+1$. Both problems are relevant to filter design, in which a unimodular normalization of the filtering function at infinity is sometimes necessary (the setting here is the half-plane). Note, however, that no interpolation value of modulus 1 is ever needed in the bandwidth since perfect match cannot take place at frequencies where the load is fully reflective. Still, it would be interesting to know which features of the interpolant can still be injectively and continuously specified when some unimodular interpolation values are imposed, that is, when interpolation points may at the same time be peak points. It is also natural to ask if in the case of matrix-valued interpolation (tangential or higher dimensional), spectral factors of $I - FF^*$ can again be used to parametrize solutions to the Nevanlinna-Pick problem whose McMillan degree is less than some prescribed bound. Both issues are left here for future research.

The paper is organized as follows. In Section 2, we discuss broadband matching which motivates the two interpolation problems raised in Section 3, called $\mathscr{P}$ and $\hat{\mathscr{P}}$ respectively. In Section 4 we state and prove our main results concerning existence, uniqueness, and generic smoothness of a solution with respect to the interpolation data. Though different from those in [22, 14, 23], our proofs likewise have a differential-topological flavour. Injectivity of the evaluation map at interpolation points (*cf.* equation (12)) is the most difficult issue, and is handled using ideas from orthogonal polynomials theory. The two interpolation problems are treated in parallel, but the authors were not able to reduce one of them to the other; in particular, Nevanlinna's iteration does not seem to be effective to do this. Finally, some numerical illustrations are given in Section 5. Our computational scheme uses continuation techniques, justified by the generic smoothness previously established. For the convenience of the reader, we provide him with an index of notation at the end of the paper.

2. Broadband matching. Communication devices such as multiplexers, routers, power dividers, couplers or antenna receptor chains, are realized by connecting together elementary components among

which filters and N-port junctions are most common. For example, multiplexers are realized by plugging $N-1$ filters (one per channel) to a N-port junction. In fact, filters are typical two-port components which are present in almost every telecommunication device.

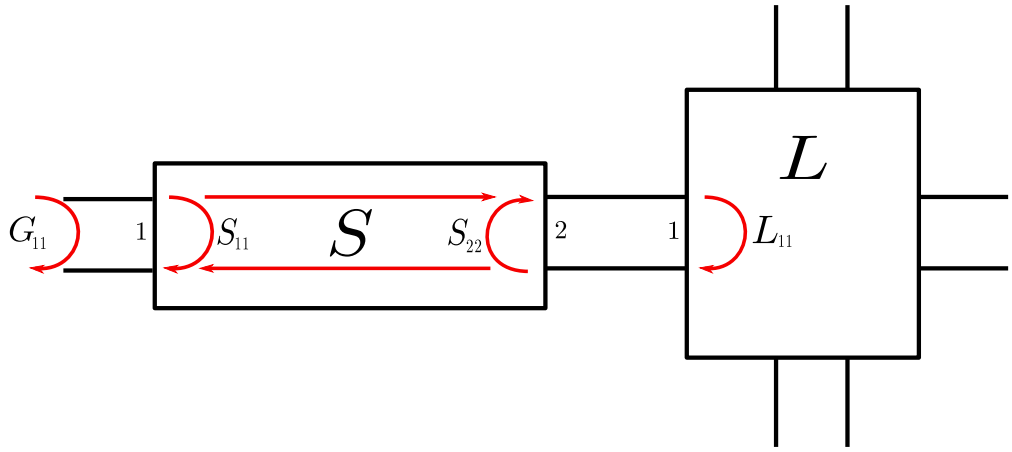

FIG. 1. *Filter plugged to a load L with reflexion coefficient* L_{11}

Now, when connecting a filter to some existing system, a recurring issue is to determine which frequencies will carry energy to the system across the filter, and which frequencies will bounce back. In this respect, the system L shown in Figure 1 (to be seen as the load of the filter S) is characterized by its reflection coefficient L_{11}, which is a complex-valued function of the frequency ω as the latter ranges over real numbers. We stress that the loads we consider may vary with frequency, *i.e.* they need not be purely resistive. Hereafter, we abbreviate real and complex numbers by $\mathbb{R}$ and $\mathbb{C}$, respectively. The effect of the filter is described by a 2×2 scattering matrix S, whose entries are again $\mathbb{C}$-valued functions of $\omega\in\mathbb{R}$. We assume in our discussion that the filter is lossless, meaning that S is unitary at all frequencies:

$$S(\omega)^* S(\omega) = Id, \qquad \omega\in\mathbb{R}, \tag{1}$$

where superscript "*" stands for "transpose-conjugate". Then, the reflection coefficient G_{11} at port 1 of the global system, consisting of the connected pair (S,L), is easily computed at the frequency ω to be

$$\begin{aligned} G_{11}(\omega) &= S_{11}(\omega) + \frac{S_{12}(\omega)S_{21}(\omega)L_{11}(\omega)}{1-S_{22}(\omega)L_{11}(\omega)} \\ &= \frac{S_{11}(\omega) - L_{11}(\omega)\det(S(\omega))}{1-S_{22}(\omega)L_{11}(\omega)} \\ &= \det(S(\omega))\frac{\overline{S_{22}(\omega)} - L_{11}(\omega)}{1-S_{22}(\omega)L_{11}(\omega)}. \end{aligned} \tag{2}$$

By definition, a matching frequency is some $\omega\in\mathbb{R}$ for which $G_{11}(\omega)=0$. This means that the filter transmits to the load all the energy carried by the signal entering port 1 at frequency ω. If $|L_{11}(\omega)|<1$, hence also $|S_{22}(\omega)L_{11}(\omega)|<1$, it follows from (2) that ω is matching if and only if

$$S_{22}(\omega) = \overline{L_{11}(\omega)}. \tag{3}$$

In contrast, a stopping frequency is defined by the property that $|G_{11}(\omega)|=1$. This means that all the energy carried by the signal entering port 1 at frequency ω bounces back and does not feed the load. If

$|L_{11}(\omega)| < 1$, this amounts in view of (2) to say that $|S_{22}(\omega)| = 1$, which is in turn equivalent by (1) to

$$S_{12}(\omega) = S_{21}(\omega) = 0. \tag{4}$$

The problem of synthesizing the filter S, or the matching network L, so that $|G_{11}|$ is smallest possible on a given frequency band is a very old one. When the filter is finite-dimensional, this issue gave rise to the matching theory of Fano and Youla [16]. Specifically, if the model for the load is rational with 2 ports, this theory provides one with a parametrization of all responses G of those global systems that can be realized by plugging a filter S of given degree to a given load L. Such G are characterized in terms of their transmission zeros, which account for the fact that the load L can be "extracted" from the global response. However, it is unknown even today how to deduce filtering characteristics from this parametrization when the load has degree greater that one. This may contribute to explain why the Fano-Youla theory had little impact in practice. Also, the need to derive a rational model for the load, and to estimate its transmission zeros, might have impeded its dissemination in the engineering community. Instead, system manufacturers often use blackbox "optimization" in spite of usual drawbacks and uncertainties pertaining to this approach. Another method was proposed by J. Helton [25] in the infinite dimensional setting, where the matching problem gets reformulated as a H^∞ approximation problem of Nehari type whose solution is elegantly formulated in terms of the norm and maximizing vectors of a Hankel operator. This technique amounts to convexify the problem and it yields hard bounds on the achievable matching error, no matter the degree of the filter, along with an optimal (non-rational) solution to match this bound. However, this optimal filter has infinite degree which makes it hardly realizable or even computable in practice. In the present paper, we propose an intermediate approach where a finite-dimensional filter response of prescribed degree is being synthesized by imposing matching and stopping frequencies when the load is given.

3. Two interpolation problems. Below, we regard the scattering matrix of a filter as a function of a *real* variable, namely the frequency. This differs from the more usual convention where the transfer function is defined on the imaginary axis rather than the real line. In the present framework, a stable finite dimensional filter is one whose scattering matrix is rational with poles in the open upper half-plane $\mathbb{C}^+$ and entries with numerator's degree not exceeding the degree of the denominator. Equivalently, the scattering matrix belongs to the Hardy space $H^\infty(\mathbb{C}^-)$ of bounded holomorphic functions in the open lower half-plane $\mathbb{C}^-$. Also, a physical RLC network has a scattering matrix whose entries are ratios of polynomials whose coefficients in even degree are real and those in odd degree are pure imaginary (so that the function is real on the imaginary axis).

A polynomial with no root in $\mathbb{C}^-$ is said to be *stable in the broad sense*. A polynomial is called *stable* if it has no root in $\overline{\mathbb{C}^-}$, the *closed* lower half-plane.

The scattering matrix S of a lossless filter is termed *inner* in $H^\infty(\mathbb{C}^-)$, meaning that it satisfies (1). By the maximum principle, this entails that S is contractive in $\mathbb{C}^-$:

$$\|S(z)\xi\| \leq \|\xi\|, \quad \forall z \in \mathbb{C}^-,\ \xi \in \mathbb{C}^2,$$

where "$\|.\|$" indicates the Euclidean norm and the inequality is strict unless $S(z)\xi$ is constant.

We denote by $\mathbb{D}$ the open unit disk. For a rational matrix valued function $F(s)$, we define its *paraconjugate* $F^*(s)$ by

$$F^*(s) = \big(F(\bar{s})\big)^*, \quad s \in \mathbb{C}.$$

When F is constant, this notation agrees with the one introduced previously for the transpose conjugate of a complex matrix. Note that $F^*(s)$ indeed takes values on $\mathbb{R}$ which are transpose conjugate to those of F. Clearly "$*$" is an involution: $(F^*)^* = F$. If p is a polynomial, then its paraconjugate p^* is the polynomial obtained by conjugating the coefficients, in particular it has the same degree as p and roots conjugate to those of p.

Recall (see *e.g.* [27, 20]) that the McMillan degree of a $\ell_1 \times \ell_2$ rational matrix R is the smallest non-negative integer ℓ for which one can write $R(s) = C(sI_\ell - A)^{-1}B + D$, where A, B, C and D are complex matrices of size $\ell \times \ell$, $\ell \times \ell_2$, $\ell_1 \times \ell$ and $\ell_1 \times \ell_2$ respectively, and I_ℓ is the identity matrix of size $\ell \times \ell$. Equivalently, the McMillan degree is the smallest possible degree for the determinant of an invertible polynomial matrix P such that PR is also a polynomial matrix. A function of the form q^*/q where q is a stable polynomial of degree d is called a *Blaschke product* of degree d. When a rational matrix R is inner, then its determinant is a Blaschke product whose degree is equal to the McMillan degree of R [10].

Every 2×2 rational inner matrix S of McMillan degree N such that $\lim_{s\to\infty} S(s) = I_2$ admits the following representation (Belevitch form [12]):

$$S = \frac{1}{q}\begin{bmatrix} p^* & -r \\ r^* & p \end{bmatrix}, \tag{5}$$

where p, q are monic complex polynomials of degree N while r is a complex polynomial of degree at most $N-1$ having no common real root with p and q is computed from p and r as the unique monic stable polynomial satisfying the Feldtkeller equation:

$$qq^* = pp^* + rr^*. \tag{6}$$

Sometimes we say that q satisfying (6) is a stable *spectral factor* of $pp^* + rr^*$, see Proposition 2 for more details about existence and uniqueness of q.

By (3), a finite set $\{x_1 \dots x_m\} \subset \mathbb{R}$ consists of matching frequencies for the filter (5) with respect to a load having reflection coefficient L_{11} if, and only if

$$\frac{p}{q}(x_k) = \overline{L_{11}(x_k)} \stackrel{def}{=} \gamma_k, \qquad 1 \le k \le m. \tag{7}$$

We shall assume throughout that $|\gamma_k| < 1$, because the matching problem at fully reflecting frequencies for the load is ill-defined: indeed expression (2) is either of modulus 1 or indeterminate of the form $0/0$ when $|L_{11}(\omega)| = 1$, which makes it impossible to meet $G_{11}(\omega) = 0$.

In addition to the interpolation conditions (7) which take place on $\mathbb{R}$, it is often desirable (*e.g.* to prevent oscillations of the response or to account for unmodelled resistive effects) to meet additional interpolation conditions inside the stability domain $\mathbb{C}^-$. To accomodate this case as well, we consider points $\{z_1 \dots z_l\}$ in $\mathbb{C}^-$ where following "complex" matching condition should hold:

$$\frac{p}{q}(z_k) = \overline{L_{11}(\Re(z_k))} \stackrel{def}{=} \beta_k, \tag{8}$$

where "$\Re$" indicates the real part. Let us abbreviate $(z_1, \cdots, z_l)^T$ and $(\beta_1, \cdots, \beta_l)^T$ by Z and β respectively (hereafter M^T denote the transpose of a matrix M). We define $P(Z, \beta)$ to be the so-called Pick matrix associated with the interpolation data (z_k, β_k), namely the Hermitian $l \times l$ matrix defined by:

$$P_{k,j}(Z, \beta) = \frac{1 - \beta_k \overline{\beta_j}}{i(z_k - \overline{z_j})}. \tag{9}$$

It is classical that $P(Z, \beta)$ is positive semi-definite if and only if there is a Schur function f on $\mathbb{C}^-$ (*i.e.* holomorphic and such that $|f| \le 1$) to meet the interpolation conditions $f(z_k) = \beta_k$ for $1 \le k \le l$, see *e.g.* [21, Ch. I, Cor. 2.3] for a version on the disk which immediately implies the present one using the conformal map $z \mapsto (i+z)/(i-z)$ from $\mathbb{C}^-$ onto $\mathbb{D}$. When such a function exists, $P(Z, \beta)$ is actually positive definite unless the solution to this constrained interpolation problem is unique, in which case the

unique solution is a Blaschke product of degree equal to the rank of $P(Z,\beta)$. Conversely, if there is a solution to the interpolation problem which is a Blaschke product of degree $\delta < l$ then $P(Z,\beta)$ has rank δ. Functions in $H^\infty(\mathbb{C}^-)$, in particular Schur functions, have nontangential limits at a.e. point of $\mathbb{R}$ which allow one to speak of their boundary values [21, Ch. I, Thm. 5.3]. Moreover, knowing the boundary values on an arbitrary subset of positive measure of $\mathbb{R}$ determines the function uniquely [21, Ch. II, Cor. 4.2]. This implies that positive definiteness of $P(Z,\beta)$ is equivalent to the existence of a Schur solution to the interpolation problem whose trace on $\mathbb{R}$ has modulus strictly less than 1 on a set of positive measure. Indeed, if two distinct solutions have modulus 1 a.e. on $\mathbb{R}$, then any convex combination yields another solution having modulus strictly less than 1 at every point where the initial solutions take on distinct values.

We call $\mathbb{P}^+_Z$ the set of those $\beta \in \mathbb{C}^l$ such that $P(Z,\beta)$ is positive definite. Clearly $\mathbb{P}^+_Z$ is open in $\mathbb{C}^l$, and it is also convex as follows easily from the equivalence of positive definiteness with the existence of Schur solutions to the interpolation problem having modulus strictly less than 1 on a subset of $\mathbb{R}$ of positive measure. In particular, $\mathbb{P}^+_Z$ is connected. For simplicity, we often drop the subscript Z when the interpolation points are understood, and write $\mathbb{P}^+$ instead $\mathbb{P}^+_Z$.

Next, if we want to impose $N-1$ stopping frequencies for S in $\mathbb{R}\cup\{\infty\}$ which are distinct from the x_k, it is equivalent in view of (4) to prescribes the roots of the transmission polynomial r in (5) (or of r^* since it has the same real zeros as r). Here, we count multiplicities by repetition and a zero at infinity means a drop in degree. We shall first consider the situation where the leading coefficient of r is imposed as well, so that r itself is prescribed. This leads us to raise the following matching problem.

Problem $\mathscr{P}$: *Given* m distinct real frequencies $(x_1, x_2 \dots x_m)$, m interpolation conditions $(\gamma_1, \gamma_2 \dots \gamma_m)$ in $\mathbb{D}^m$, l distinct "complex frequencies" $(z_1, z_2 \dots z_l)$ associated to l interpolation values $(\beta_1, \beta_2 \dots \beta_l)$ in $\mathbb{P}^+$ and $r \not\equiv 0$ a complex polynomial of degree at most $m+l-1$, such that $r(x_k) \neq 0$, $k = 1, \dots, m$, *to find* (p,q) a pair of monic complex polynomials of degree $N = m+l$ such that,

$$\left\{\begin{array}{rcll} \frac{p}{q}(x_k) & = & \gamma_k, & \text{for } k = 1,..,m \\ \frac{p}{q}(z_\ell) & = & \beta_\ell, & \text{for } \ell = 1,..,l \\ qq^* - pp^* & = & rr^* & \end{array}\right. \tag{10}$$

and q has no root in the open lower half-plane $\mathbb{C}^-$ (*i.e.* q is stable in the broad sense).

Nothing in the formulation of Problem $\mathscr{P}$ prevents the denominator polynomial q from vanishing at real points. If this happens, then the McMillan degree of S will drop since a real zero of q is a zero both of p and r with the same multiplicity (because $|p|^2 + |r|^2 = |q|^2$ on $\mathbb{R}$ by (10)), *cf* (5). Observe in this case, by the assumption in Problem $\mathscr{P}$, that a common zero to p and r cannot be one of the x_k, hence $\frac{p}{q}(x_k)$ in (10) is still equal to $p(x_k)/q(x_k)$. Remark also that the real roots of r are peak points for the modulus of p/q, *i.e.* points where the maximum value $|p/q| = 1$ is attained.

Problem $\mathscr{P}$ may be viewed as a generalization of the Nevanlinna-Pick interpolation problem with degree constraint studied in [22], in which the interpolation points are now allowed to lie *on* the real axis, whereas in [22] they are confined to the stability domain $\mathbb{C}^-$. We also extend the results announced in [11], in that the polynomial r can have real roots provided these are not interpolation points. Both generalizations are *crucial* to approach the matching problem with interpolation techniques as described in Section 2, which was the main incentive for the authors to undertake the present study.

Problem $\mathscr{P}$ imposes the condition $(p/q)(\infty) = 1$ since p, q are monic of degree N. In other words there is an implicit extra interpolation node on the real line (namely ∞) with interpolation value equal to 1. In connection with the matching problem discussed in Section 1, where p/q is thought of as the entry S_{22} of the scattering matrix S of a filter (*cf.* (5)), this is the right normalization in that the low-pass equivalent model to a LC-resonant filter behaves like an open circuit at infinite frequency, which results into the condition $S(\infty) = Id$. However, if we add for example a transmission line in front of the filter, the line can be modeled in the narrow band approximation by a reflexion coefficient which is unimodular (with free phase) at infinity. This extra design parameter can be used to meet an additional interpolation

condition or, dually, to reduce the degree of p, q while keeping the interpolation properties of p/q. This leads us naturally to the following "non-normalized" version of problem $\mathscr{P}$.

Problem $\hat{\mathscr{P}}$: *Given* m distinct real frequencies $(x_1, x_2 \dots x_m)$, m interpolation conditions $(\gamma_1, \gamma_2 \dots \gamma_m)$ in $\mathbb{D}^m$, l distinct "complex frequencies" $(z_1, z_2 \dots z_l) \in (\mathbb{C}^-)^l$ associated to l interpolation values $(\beta_1, \beta_2 \dots, \beta_l)$ in $\mathbb{P}^+$ and $r \not\equiv 0$ a complex polynomial of degree at most $m+l-1$, such that $r(x_k) \neq 0$, $k = 1, \dots, m$, *to find* (p,q) a couple of complex polynomials of degree at most $\hat{N} = m+l-1$ such that,

$$\left\{ \begin{array}{rcll} \frac{p}{q}(x_k) & = & \gamma_k, & \text{for } k = 1,..,m \\ \frac{p}{q}(z_\ell) & = & \beta_\ell, & \text{for } \ell = 1,..,l \\ qq^* - pp^* & = & rr^* & \end{array} \right. \tag{11}$$

where q is stable in the broad sense and normalized so that $q(x_1) > 0$ if $m > 0$, $q(z_1) > 0$ otherwise.

Although problems $\mathscr{P}$ and $\hat{\mathscr{P}}$ will be treated in a similar way, the authors were not able to reduce one of them to the other.

4. Solution to $\mathscr{P}$ and $\hat{\mathscr{P}}$: two matching theorems. We begin with the analysis of problem $\mathscr{P}$. It relies on the study of a specific evaluation map to be defined presently. According to the statement of the problem, we fix $(x_1, x_2 \dots x_m)^T \in \mathbb{R}^m$, $(z_1, z_2 \dots z_l)^T \in (\mathbb{C}^-)^l$, and a polynomial r of degree at most $m+l-1$ such that $r(x_k) \neq 0$ for all k. We let $\mathbf{PM}_N$ designate the set of monic polynomial of degree $N = m+l$ with complex coefficients. This set is topologized as $\mathbb{C}^N \sim \mathbb{R}^{2N}$, using coefficients as coordinates except for the leading one which is equal to 1 by definition. Specifically, we identify $p(z) = z^N + p_{N-1}z^{N-1} + \cdots + p_0$ with the vector $(p_0, p_1, \cdots, p_{N-1})^T \in \mathbb{C}^N$. Hereafter, the degree of a polynomial p is abbreviated as $\deg p$.

As r is fixed with $\deg r < N$, equation (6) associates to each $p \in \mathbf{PM}_N$ a unique polynomial $q = q(p) \in \mathbf{PM}_N$ which is stable in the broad sense, *cf.* Proposition 2 to come. Since $|p|^2 \leq |p|^2 + |r|^2 = |q|^2$ on $\mathbb{R}$, the rational function p/q has modulus at most 1 there. In particular it has no real pole, and no pole in $\mathbb{C}^-$ either since q is stable in the broad sense. Thus, by the maximum principle, we conclude that $|p/q| \leq 1$ on $\overline{\mathbb{C}^-}$. In addition, since no x_k is a root of r by assumption, we have that $|p(x_k)/q(x_k)| < 1$ hence p/q is not a Blaschke product. Therefore the Pick matrix associated with the interpolation data $(z_k, p(z_k)/q(z_k))$ is positive definite, and we can define an evaluation map $\psi : \mathbf{PM}_N \to \mathbb{D}^m \times \mathbb{P}^+_Z$ by the formula

$$\psi(p) = \begin{pmatrix} p(x_1)/q(x_1) \\ \vdots \\ p(x_m)/q(x_m) \\ p(z_1)/q(z_1) \\ \vdots \\ p(z_l)/q(z_l) \end{pmatrix} \in \mathbb{D}^m \times \mathbb{P}^+_Z. \tag{12}$$

The result which yields existence and uniqueness of a solution to Problem $\mathscr{P}$, along with generic differentiability thereof, may now be stated as follows.

THEOREM 1. *ψ is a homeomorphism from $\mathbf{PM}_N$ onto the product space $\mathbb{D}^m \times \mathbb{P}^+$. Moreover, the restriction of ψ to those $p \in \mathbf{PM}_N$ having no common real root with r is a diffeomorphism onto its image.*

REMARK 4.1. *From the uniqueness part of Theorem 1, it follows that if the set of interpolation points x_k, z_ℓ is stable under the map $z \mapsto -\bar{z}$, and if the interpolation values at x_k and $-x_k$ (resp. z_ℓ and $-\bar{z}_\ell$) are conjugate, then p and q have pure imaginary coefficients in odd degree and real coefficients in even degree. Equivalently, p/q is real-valued on the imaginary axis.*

The proof of Theorem 1 will be given in sections 4.5 and 4.6, after some preparatory work.

4.1. Continuity and differentiability of ψ. For $k \geq 0$ an integer, we let $\mathbf{P}_k$ be the space of complex polynomials of degree at most k and $\mathbf{PE}_k$ the subset comprising polynomials of exact degree k. We occasionally write $\mathbf{P}_{\mathbb{R},k}$ for the real subspace of polynomials with real coefficients. The space $\mathbf{P}_k$ identifies with $\mathbb{C}^{k+1} \sim \mathbb{R}^{2k+2}$, using coefficients as coordinates. Thus, $p(z) = p_k z^k + p_{k-1} z^{k-1} + \cdots + p_0$ is regarded as $(p_0, p_1, \cdots, p_k)^T \in \mathbb{C}^{k+1}$. With this definition, $\mathbf{PM}_N \subset \mathbf{P}_N$ is the hyperplane $\{p_N = 1\}$ which in turn identifies with $\mathbb{C}^N$ as pointed out earlier. We further denote by $\mathbf{SB}_N$ the set of polynomials of degree at most N which are stable in the broad sense, and by $\mathbf{SBM}_N$ the subset of monic polynomials of degree N stable in the broad sense. The set of stable polynomials of degree at most N will likewise be denoted by $\mathbf{S}_N$, the subset of stable polynomial of exact degree N by $\mathbf{SE}_N$, and the subset of stable monic polynomials of degree N by $\mathbf{SM}_N$.

We write $\mathbf{P}^+_{2N}$ for the set of polynomials of degree at most $2N$ which are non-negative on $\mathbb{R}$. Such a polynomial must have real coefficients, even degree, positive dominant coefficient, and its real roots have even multiplicity. Moreover, it is equal to its para-conjugate. We put $\mathbf{PE}^+_{2N}$ for the subset of non-negative polynomials of exact degree $2N$ and $\mathbf{PM}^+_{2N}$ for the subset of non-negative monic polynomials of degree $2N$. The sets $\mathbf{P}^+_{2N}$ and $\mathbf{PE}^+_{2N}$ will be regarded as embedded in $\mathbb{R}^{2N+1}$, and again $\mathbf{PM}^+_{2N}$ will be seen as a subset of $\mathbb{R}^{2N}$ for it is the intersection of $\mathbf{P}^+_{2N} \subset \mathbb{R}^{2N+1}$ with the hyperplane $\{p_{2N+1} = 1\}$.

The interior $\overset{\circ}{\mathbf{PM}}{}^+_{2N}$ of $\mathbf{PM}^+_{2N} \subset \mathbb{R}^{2N}$ consists of monic polynomials of degree $2N$ which are strictly positive on $\mathbb{R}$. Indeed, if $p \in \mathbf{PM}^+_{2N}$ is such that $p(x_0) = 0$, then adding a small negative constant to p will destroy positivity at x_0 and therefore p cannot lie interior to $\mathbf{PM}^+_{2N}$ in $\mathbb{R}^{2N}$. Conversely, let $p \in \mathbf{PM}^+_{2N}$ have no zero on $\mathbb{R}$. Then, there is $\varepsilon > 0$ such that $|p(x)| > \varepsilon$ for $x \in \mathbb{R}$. Write $p(x) = x^{2N+1} + p_{2N} x^{2N} + \cdots + p_0$ and put $a := \max\{1, \varepsilon + 2\Sigma_{j=0}^{2N} |p_j|\}$. If we let $(\delta_0, \cdots, \delta_{2N-1})^T \in \mathbb{R}^{2N}$ be such that $\Sigma |\delta_j| a^j < \varepsilon/2$, we easily get upon setting $\delta p(x) := \Sigma_{j=0}^{2N-1} \delta_j x^j$ that $|p + \delta p| > \varepsilon/2$ on $[-a, a]$ and that

$$|p(x) + \delta p(x)| \geq |x|^{2N} \left(|x| - \varepsilon/2 - \Sigma_{j=1}^{2N-1} |p_j| \right) > \frac{|x|^{2N+1}}{2}, \qquad |x| > a.$$

Hence p lies interior to $\mathbf{PM}^+_{2N}$. Likewise, the interior $\overset{\circ}{\mathbf{PE}}{}^+_{2N}$ of $\mathbf{PE}^+_{2N} \subset \mathbb{R}^{2N+1}$ consists of polynomials of exact degree $2N$ which are strictly positive on $\mathbb{R}$. In another connection, the interior of $\mathbf{SBM}_N \subset \mathbf{PM}_N$ is $\mathbf{SM}_N$. Indeed, if $p \in \mathbf{SBM}_N \setminus \mathbf{SM}_N$, then p must have a real root x, and replacing the latter with $x - i\varepsilon$ for small $\varepsilon > 0$ produces a nearby polynomial which is unstable. Hence p is not an interior point of $\mathbf{SBM}_N$. Conversely if $p \in \mathbf{SM}_N$, then it has N-roots in $\mathbb{C}^-$ and we can pick a smooth curve $\Gamma \subset \mathbb{C}^-$ encompassing them. Since Γ is compact and p does not vanish on Γ, we have that $|p| > \eta > 0$ on Γ and if $q \in \mathbf{PM}_N$ is close enough to p then $|q| > \eta$ on Γ as well. By the argument principle, we have that $\int_\Gamma q'/q dz = 2i\pi n$ where n is the number of roots of q inside Γ, and if q is sufficiently close to p this integral is arbitrary close to $\int_\Gamma p'/p dz = 2i\pi N$ so that $n = N$, implying that $q \in \mathbf{SM}_N$. Thus, p lies interior to $\mathbf{SBM}_N$. As well, the interior of $\mathbf{SB}_N$ is $\mathbf{SE}_N$. Indeed, if $p(z) \in \mathbf{SBM}_N$ has degree strictly less than N, multiplying it by $(1 - i\varepsilon z)$ for small $\varepsilon > 0$ yields a nearby polynomial (in the topology of $\mathbf{SBM}_N$) which is unstable, and if p has a real root x then replacing x by $x - i\varepsilon$ again produces an unstable nearby polynomial. Thus, the interior of $\mathbf{SB}_N$ is included in $\mathbf{SE}_N$, and the converse inclusion follows from an application of the argument principle similar to the one already used to show that $\mathbf{SM}_N$ is the interior of $\mathbf{SBM}_N$.

After these rather mechanical preliminaries, we are in position to prove our first result:

PROPOSITION 2. *To any non zero $P \in \mathbf{P}^+_{2N}$, one can associate $q \in \mathbf{SB}_N$ such that*

$$P(t) = |q(t)|^2 = q(t) q^*(t), \quad t \in \mathbb{R}. \tag{13}$$

The polynomial $q(s)$ is unique up to a multiplicative unimodular constant, and if P has exact degree $2N$ then q has exact degree N. For fixed $z \in \mathbb{C}^-$ and $x \in \mathbb{R}$, define three maps φ_z, φ_x and φ_N by the formulas:

a) $\varphi_z : \mathbf{P}^+_{2N} \setminus \{0\} \to \mathbf{SB}_N$, with $\varphi_z(P)$ the unique solution to (13) meeting $q(z) > 0$,

b) $\varphi_x : \mathbf{P}^+_{2N} \setminus \{p \in \mathbf{P}^+_{2N}, p(x) = 0\} \to \mathbf{SB}_N$, with $\varphi_x(P)$ the unique solution to (13) meeting $q(x) > 0$,

c) $\varphi_N : \mathbf{PM}_{2N}^+ \to \mathbf{SBM}_N$ *with* $\varphi_N(P)$ *the unique monic solution to (13).*
The maps φ_z, φ_x, φ_N *are continuous and define homeomorphisms* $\mathbf{P}_{2N}^+ \setminus \{0\} \to \{p \in \mathbf{SB}_N,\ p(z) > 0\}$, $\mathbf{P}_{2N}^+ \setminus \{p \in \mathbf{P}_{2N}^+, p(x) = 0\} \to \{p \in \mathbf{SB}_N,\ p(x) > 0\}$,*and* $\mathbf{PM}_{2N}^+ \to \mathbf{SBM}_N$ *respectively.*

Moreover, the restriction of φ_N *to* $\overset{\circ}{\mathbf{PM}}{}_{2N}^+$ *is a diffeomorphism onto* $\mathbf{SM}_N$*, and the restriction of* φ_z *(resp.* φ_x*) to* $\overset{\circ}{\mathbf{PE}}{}_{2N}^+$ *is a diffeomorphism onto the open subset* $\{p \in \mathbf{SE}_N,\ p(z) > 0\}$ *(resp.* $\{p \in \mathbf{SE}_N,\ p(x) > 0\}$*) of the linear subspace* $\mathfrak{V}_z$ *(resp.* $\mathfrak{V}_x$*) of* $\mathbf{P}_N$ *consisting of polynomials of degree at most N whose value at z (resp. x) is real. Specifically, the derivatives of* φ_z*,* φ_x*, and* φ_N *are given by:*

- *if* $P \in \overset{\circ}{\mathbf{PE}}{}_{2N}^+$ *and* δP *is a real polynomial of degree at most* $2N$*, then*

$$D\varphi_z(P)[\delta P] = u$$

where u is the unique polynomial such that

$$u^*\varphi_z(P) + u\varphi_z^*(P) = \delta P, \qquad u \in \mathbf{P}_N, \quad u(z) \in \mathbb{R}; \tag{14}$$

- *if* $P \in \overset{\circ}{\mathbf{PE}}{}_{2N}^+$ *and* δP *is a real polynomial of degree at most* $2N$*, then*

$$D\varphi_x(P)[\delta P] = u$$

where u is the unique polynomial such that

$$u^*\varphi_x(P) + u\varphi_x^*(P) = \delta P, \qquad u \in \mathbf{P}_N, \quad u(x) \in \mathbb{R}; \tag{15}$$

- *if* $P \in \overset{\circ}{\mathbf{PM}}{}_{2N}^+$ *and* δP *is a real polynomial of degree at most* $2N-1$*, then*

$$D\varphi_N(P)[\delta P] = u$$

where u is the unique polynomial such that

$$u^*\varphi_N(P) + u\varphi_N^*(P) = \delta P, \qquad u \in \mathbf{P}_{N-1}. \tag{16}$$

Proof. It is elementary to check that $q \in \mathbf{SB}_N$ satisfies (13) if and only if its roots are the real roots of P with half their multiplicity and the non-real roots of P having strictly positive imaginary part with their multiplicity, while its dominant coefficient has square modulus equal to the dominant coefficient of P. This shows the existence of q and its uniqueness up to a multiplicative unimodular constant. Alternatively, the result also follows upon applying to $P(i(e^{i\theta}+1)/e^{i\theta}-1))$ a classical result by Fejèr and Riesz asserting that non-negative trigonometric polynomials are square moduli of algebraic polynomials on the unit circle [34, sec. 53].

Next, we prove that φ_z is continuous. Let (P_k) be a sequence in $\mathbf{P}_{2N}^+ \setminus \{0\}$ converging to $P \in \mathbf{P}_{2N}^+ \setminus \{0\}$. We must show that $q_k := \varphi_z(P_k)$ converges to $\varphi_z(P)$. As a basis of $\mathbf{P}_N$, pick the Lagrange interpolation polynomials L_n, $n = 0, 1 \ldots, N$, associated with the integer points $x = 0, 1, \ldots, N$. In other words, to each $n \in \{0, \cdots, N\}$, we have for $0 \le j \le N$ that $L_n(j) = \delta_{n,j}$, the Kronecker delta function. The coordinates of q_k in this basis are $(q_k(0), q_k(1), \ldots, q_k(N))$. As $|q_k(j)| = \sqrt{P_k(j)}$ is bounded since (P_k) converges, the sequence (q_k) is in turn bounded in $\mathbf{P}_N$. Thus we may extract a convergent sub-sequence from any subsequence, and *we claim* that the limit is $\varphi_z(P)$; this will prove the announced continuity. Assume indeed that a subsequence, again denoted by (q_k) for simplicity, converges to $q \in \mathbf{P}_N$. Since taking products and conjugates of polynomials is continuous $\mathbf{P}_N \times \mathbf{P}_N \to \mathbf{P}_{2N}$ and $\mathbf{P}_N \to \mathbf{P}_N$ respectively, we get in the limit from the relation $P_k = q_k q_k^*$ that $P = qq^*$. In particular $q \not\equiv 0$. Moreover $q(z) \ge 0$ because pointwise evaluation is also continuous. In order to prove the claim, it remains to show that $q \in \mathbf{SB}_N$.

Suppose for a contradiction that q has some unstable root $s_0 \in \mathbb{C}^-$ with multiplicity μ. As q is not identically zero, s_0 is an isolated root so there exists $R > 0$ such that the disk $D = \{s, |s - s_0| \leq R\}$ is included in $\mathbb{C}^-$ and the circle $\partial D = \{s, |s - s_0| = R\}$ contains no root of q. As the sequence (q_k) converges uniformly to q on every compact subset of $\mathbb{C}$, the argument principle implies that q_k has μ roots in D counting multiplicities, as soon as k is large enough, which yields the desired contradiction.

Next, consider the map $\tilde{\varphi} : \mathbf{P}_N \to \mathbf{P}_{2N}^+$ defined by $\tilde{\varphi}(q) = qq^*$. Clearly, the restriction of $\tilde{\varphi}$ to the subset $\{p \in \mathbf{SB}_N,\ p(z) > 0\}$ (resp. $\{p \in \mathbf{SB}_N,\ p(x) > 0\}$, $\mathbf{SBM}_N$) is a continuous inverse to φ_z (resp. φ_x, φ_N). In addition $\tilde{\varphi}$ is C^∞-differentiable, and its differential $D\tilde{\varphi}(q)$ at q acts on $dq \in \mathbf{P}_N$ by the formula

$$D\tilde{\varphi}(q)[dq] \ = \ dqq^* + qdq^*. \tag{17}$$

Let us prove that the restriction of φ_z to $\overset{\circ}{\mathbf{P}}{}_{2N}^+$ is a diffeomorphism onto $H_z \overset{def}{=} \{p \in \mathbf{SE}_N,\ p(z) > 0\}$. By definition, if $P \in \overset{\circ}{\mathbf{PE}}{}_{2N}^+$ then $q = \varphi_z(P)$ lies in H_z which is obviously an open subset of $\mathfrak{V}_z$. Being a linear subspace of $\mathbf{P}_N$ of codimension 1, $\mathfrak{V}_z$ identifies with $\mathbb{R}^{2N+1}$ and the restriction of $\tilde{\varphi}$ to $\mathfrak{V}_z$ is in turn C^∞-differentiable. Further, the restriction $\tilde{\varphi}_1$ of $\tilde{\varphi}$ to H_z is inverse to the restriction of φ_z to $\overset{\circ}{\mathbf{PE}}{}_{2N}^+$, and it is differentiable with derivative given by (17) restricted to $dq \in \mathfrak{V}_z$. *We claim* that this derivative is injective. Assume indeed that $D\tilde{\varphi}_1(q)[dq] = 0$. Then, since q and q^* are coprime polynomials (for their roots respectively lie in $\mathbb{C}^+$ and $\mathbb{C}^-$), we get from (17) that q divides dq so that $dq = \lambda\, q$ for some $\lambda \in \mathbb{C}$, because the degree of dq cannot exceed N which is the degree of q. In view of (17), we conclude from $D\tilde{\varphi}_1(q)[dq] = 0$ that $(\lambda + \bar{\lambda})qq^* = 0$, and since $qq^* \neq 0$ (for it has exact degree $2N$) we see that λ is pure imaginary. As $q(z) > 0$, this implies that $dq(z) = \lambda q(z)$ is pure imaginary, and since it is also real because $dq \in \mathfrak{V}_z$ we necessarily have that $\lambda = 0$ whence $dq = 0$. *This proves the claim*. As $D\tilde{\varphi}_1(q)$ maps $\mathfrak{V}_z$ injectively into reals polynomials of degree at most $2N$ and both spaces have dimension $2N+1$, we conclude that it is invertible. Now, the inverse function theorem asserts that $\tilde{\varphi}_1$ is a local diffeomorphism $H_z \to \overset{\circ}{\mathbf{PE}}{}_{2N}^+$. But we saw that $\tilde{\varphi}$ is a homeomorphism $\{p \in \mathbf{SB}_N,\ p(z) > 0\} \to \mathbf{P}_{2N}^+ \setminus \{0\}$ under which the image of H_z is evidently $\overset{\circ}{\mathbf{PE}}{}_{2N}^+$, hence $\tilde{\varphi}_1$ is a global diffeomorphism $H_z \to \overset{\circ}{\mathbf{PE}}{}_{2N}^+$ This concludes the proof for φ_z.
The case of φ_x is similar, and the case of φ_N even simpler for dq in (17) will have degree at most $N-1$, making obvious that it must vanish if it is divisible by q. ∎

REMARK 4.2. *Continuity of spectral factorization can be given other, more analytic proofs based on the Poisson representation of* log*-moduli of outer functions, see e.g. [9, Lemma 1] for an alternative argument on the disk that easily carries over to the half-plane.*

Keeping in mind notation from Proposition 2, we may now represent the map ψ introduced in (12) as the composition of two functions, namely the map from $\mathbf{PM}_N$ into $\mathbf{PM}_N \times \mathbf{SBM}_N$ given by

$$p \to (p, \varphi_N(pp^* + rr^*))$$

followed by the evaluation map

$$(p,q) \to \left(\frac{p}{q}(x_1), \ldots, \frac{p}{q}(x_m), \frac{p}{q}(z_1), \ldots, \frac{p}{q}(z_l)\right)^T$$

from $\mathbf{PM}_N \times \mathbf{SBM}_N$ into $\mathbb{D}^m \times \mathbb{P}_Z^+$. Proposition 2 immediately yields:

COROLLARY 3. *The map ψ is continuous at every $p \in \mathbf{PM}_N$, and if p has no real root in common with r, then ψ is C^∞-smooth around p.*

4.2. An excursion into positive real functions. Recall that a holomorphic function f on $\mathbb{C}^-$ is a Schur function if $|f| \leq 1$, and a Carathéodory function if $\Re f \geq 0$. The map $f \mapsto (1-f)/(1+f)$ is an involution from Schur functions to Carathéodory functions and back. Like Schur functions, Carathéodory functions have non tangential limits a.e. on $\mathbb{R}$ from $\mathbb{C}^-$, allowing us to speak of their boundary values. Unlike Schur functions, though, rational Carathéodory functions may well have poles on $\mathbb{R}$. The function

$$z \mapsto -i/(z-x_0), \qquad x_0 \in \mathbb{R}, \tag{18}$$

is an example. This difference stems from the fact that the real part of a Schur function is the Poisson integral of a function on $\mathbb{R}$, wheras that of a Carathéodory function is generally the Poisson integral of a measure [21, Ch. I, Thm. 3.5]. In the previous example, the measure is a Dirac delta at x_0.

If (p,q) is a solution to Problem $\mathscr{P}$, then p/q is a Schur function as explained before (12). Our proof of Theorem 1 rests in part on the link, to be stressed momentarily, between problem $\mathscr{P}$ and its analog for Carathéodory functions.

For $p \in \mathbf{PM}_N$ and $q = \varphi_N(pp^* + rr^*)$, we put $\Sigma = \Sigma(p) := p/q$. By construction, this is a Schur rational function satisfying

$$1 - \Sigma^*\Sigma = \frac{rr^*}{qq^*}. \tag{19}$$

We now define a Carathéodory function Y (the so-called Cayley transform of Σ) by the formula

$$Y := \frac{1-\Sigma}{1+\Sigma} = \frac{q-p}{q+p}. \tag{20}$$

Then, a straightforward computation shows that

$$Y + Y^* = \frac{(q-p)(q^*+p^*) + (q^*-p^*)(q+p)}{(q+p)(q^*+p^*)} = \frac{2rr^*}{(q+p)(q^*+p^*)}. \tag{21}$$

By definition, the dissipation polynomial of a rational Carathéodory function is the numerator of the fraction $Y + Y^*$ when the latter is written in irreducible form. To us, given a rational Carathéodory function π/χ with π, χ polynomials, it is more convenient to define the *dissipation polynomial of the pair* (π,χ) to be the polynomial $\pi\chi^* + \pi^*\chi$. Thus, by (21), $2rr^*$ is the dissipation polynomial of the pair $(q-p, q+p)$.

In view of (20)-(21), Problem $\mathscr{P}$ is equivalent to an interpolation problem for rational Carathédory functions of the form π/χ where $\pi \in \mathbf{P}_{N-1}$ and $\chi \in \mathbf{SBM}_N$, with prescribed dissipation polynomial rr^* for the pair (π,χ). The corresponding interpolation conditions are $(\pi/\chi)(x_k) = (1-\gamma_k)/(1+\gamma_k)$ and $(\pi/\chi)(z_\ell) = (1-\beta_\ell)/(1+\beta_\ell)$. For this equivalent problem, the analog of equation (6) is

$$\pi\chi^* + \pi^*\chi = rr^*, \tag{22}$$

which entails that π/χ is a Carathéodory function when $\chi \in \mathbf{SBM}_N$. If r has no real root and (π,χ) is a solution to the Carathéodory analog of Problem $\mathscr{P}$, then χ is stable by (22), *i.e.* it lies in $\mathbf{SM}_N$ and not just in $\mathbf{SBM}_N$. This entails that χ, χ^* are coprime so that π is uniquely determined by r and χ through (22). In this case the Carathéodory analog to $\mathscr{P}$ is easier to handle than $\mathscr{P}$ itself, essentially because (22) is inear in χ and π whereas (6) is quadratic in q and p. Things change when r has a real root, say x_0. For if $\chi \in \mathbf{SBM}_N$ satisfies $\chi(x_0) = 0$ and $\pi \in \mathbf{P}_{N-1}$ is a solution to (22) then for each $a > 0$ the polynomial $\pi_a(s); = \pi(s) - ia\chi(s)/(s-x_0)$ is again a solution. So, when r and χ happen to have a common real root, they fall short of determining π *via* (22). This discrepancy arises because the dissipation polynomial of the pair $(-ia, (z-x_0))$ is identically zero and still $z \mapsto -ia/(z-x_0)$ is a non-zero Carathéodory function, see example (18).

Applications of Problem $\mathscr{P}$ to filter design discussed in Section 1 typically involve a transmission polynomial r having real zeros near the endpoints of the bandwidth of the filter, because these ensure stiffness of the response there. Thus, we find ourselves in the diffult case of the Carathéodory analog to $\mathscr{P}$. Nevertheless, the latter plays an important role in our proof of Theorem 1, when showing that ψ and its derivative are injective.

It will be convenient to introduce the Hardy space $H^2(\mathbb{C}^-)$ consisting of those holomorphic functions f in $\mathbb{C}^-$ satisfying

$$\sup_{y<0}\left(\int_{-\infty}^{+\infty}|f(x+iy)|^2\,dx\right)^{1/2}<+\infty. \tag{23}$$

Such a function has a nontangential limit at almost every $x\in\mathbb{R}$ that we denote again with $f(x)$, the argument being now in $\mathbb{R}$ and not in $\mathbb{C}^-$. This nontangential limit lies in the Lebesgue space $L^2(\mathbb{R})$, and in fact $\|f\|_{L^2(\mathbb{R})}$ is equal to the supremum in (23) [21, Ch. I, Thm. 5.3]. Moreover, for $z\in\mathbb{C}^-$, $f(z)$ can be recovered from f on $\mathbb{R}$ through a Cauchy as well as a Poisson integral [21, Ch. II, sec. 3]. In particular, a rational function π/χ with $\pi\in\mathbf{PE}_k$ and $\chi\in\mathbf{PE}_N$ does lie in $H^2(\mathbb{C}^-)$ if and only if $k<N$ and it has no pole in $\overline{\mathbb{C}^-}$, in other words if it vanishes at infinity and if every zero of χ in $\overline{\mathbb{C}^-}$ is cancelled by a corresponding zero of π. It follows easily that a rational Carathéodory function lies in $H^2(\mathbb{C}^-)$ if and only if its restriction to the real line lies in $L^2(\mathbb{R})$. Every $f\in H^2(\mathbb{C}^-)$ is the Cauchy integral of the non-tangential limit of its real part:

$$f(z)=-\frac{1}{i\pi}\int_{\mathbb{R}}\frac{\Re f(t)}{t-z}\,dt,\qquad z\in\mathbb{C}^-, \tag{24}$$

and the non-tangential limit of its imaginary part is the Hilbert transform of the nontangential limit of its real part [21, Ch. III, sec. 2]:

$$\Im f(x)=\frac{1}{\pi}\lim_{\varepsilon\to0^+}\int_{|x-t|>\varepsilon}\frac{\Re f(t)}{t-x}\,dt,\qquad \text{a.e. } x\in\mathbb{R}. \tag{25}$$

Consequently, the nontangential limit of f can be recovered from its real part as

$$f(x)=\Re f(x)+\frac{i}{\pi}\lim_{\varepsilon\to0^+}\int_{|x-t|>\varepsilon}\frac{\Re f(t)}{t-x}\,dt,\qquad \text{a.e. } x\in\mathbb{R}. \tag{26}$$

When f is smooth on $\mathbb{R}$, in particular if it is rational, then the last formula is valid for all $x\in\mathbb{R}$ and not just almost every x.

THEOREM 4. *Let $g\in\mathbf{PM}_{2N}^+$ and $d\in\mathbf{P}_{2K}^+$, with $K<N$ and $\frac{d}{g}\in L^2(\mathbb{R})$. Let further $(x_1,\cdots,x_m)^T\in\mathbb{R}^m$ and $(z_1,\cdots,z_l)^T\in(\mathbb{C}^-)^l$ with $m+l=N$, and assume that $d(x_k)\neq0$ for all $k\in\{1,\cdots,m\}$. Then, the following three properties hold.*

1. *There exists a unique pair of polynomials $\chi_g\in\mathbf{SBM}_N$ and $\pi_{d,g}\in\mathbf{P}_{N-1}$, such that the rational function $Y_{d,g}=\frac{\pi_{d,g}}{\chi_g}$ satisfies:*
   (a) $Y_{d,g}\in H^2(\mathbb{C}^-)$
   (b) $\pi_{d,g}\chi_g^*+\pi_{d,g}^*\chi_g=d$
   (c) $Y_{d,g}+Y_{d,g}^*=\frac{d}{g}$
2. *Let g_1,g_2 in $\mathbf{PM}_{2N}^+$ such that $\frac{d}{g_1}$ and $\frac{d}{g_2}$ are in $L^2(\mathbb{R})$. If*
   (a) $\forall k\in\{1..m\}\ Y_{d,g_1}(x_k)=Y_{d,g_2}(x_k)$,
   (b) $\forall k\in\{1..l\}\ Y_{d,g_1}(z_k)=Y_{d,g_2}(z_k)$,
   then $g_1=g_2$ so that $\pi_{d,g_1}=\pi_{d,g_2}$ and $\chi_{g_1}=\chi_{g_2}$ by property 1.

3. *For fixed $d \in \mathbf{P}^+_{2K}$, the evaluation map $\theta : \overset{\circ}{\mathbf{PM}}{}^+_{2N} \to \mathbb{C}^N$ given by*

$$\theta(g) = \begin{pmatrix} Y_{d,g}(x_1) \\ \vdots \\ Y_{d,g}(x_m) \\ Y_{d,g}(z_1) \\ \vdots \\ Y_{d,g}(z_l) \end{pmatrix} \tag{27}$$

is well-defined and a diffeomorphism onto its image.

Proof. Let $u(z) = \Pi_{j=1}^{\ell}(z-x_j)^{2\kappa_j}$ be the monic divisor of g comprising all its real roots (if g has no real roots, then $\ell = 0$ and $u \equiv 1$). If $\pi_{d,g}$, χ_g satisfy (1b) and (1c), a short computation yields that $\chi_g = \varphi_N(g)$, where φ_N was defined in Proposition 2. In particular χ_g is uniquely determined by g and of necessity $u^{1/2} := \Pi_{j=1}^{\ell}(z-x_j)^{\kappa_j}$ divides χ_g. Then, condition (1a) implies that $u^{1/2}$ also divides $\pi_{d,g}$. Moreover, u divides d since $d/g \in L^2(\mathbb{R})$. After cancellation of the factor $u = u^{1/2}(u^{1/2})^*$ on both sides of (1b), we find that $\pi_{d,g}/u^{1/2}$ is uniquely determined in $\mathbf{P}_{N-1-\Sigma_j\kappa_j}$ by an equation of the Bezout type since the polynomials $\chi_g/u^{1/2}$ and $(\chi_g/u^{1/2})^*$ are coprime (for if χ_g had more real roots than those in $u^{1/2}$, counting multiplicities, they would also appear in χ_g^* and thus in g, contradicting the definition of u). This establishes the uniqueness part of property 1 and the existence part follows easily by reverting the computations.

Let $Y_{d,g}$ be as in property 1. It is a rational function in $H^2(\mathbb{C}^-)$ whose real part on $\mathbb{R}$ is $d/(2g)$ by (1c), therefore (26) implies for $k \in \{1\dots m\}$ that

$$Y_{d,g}(x_k) = \frac{d}{2g}(x_k) + \frac{i}{2\pi}\lim_{\varepsilon\to 0}\int_{\varepsilon<|t-x_k|}\frac{d(t)}{g(t)}\frac{dt}{t-x_k} \tag{28}$$

and (24) entails that $\forall k \in \{1\dots l\}$

$$Y_{d,g}(z_k) = \frac{i}{2\pi}\int_{-\infty}^{\infty}\frac{d(t)}{g(t)}\frac{dt}{t-z_k}. \tag{29}$$

Suppose now that g_1, g_2 are as in property 2. Note that $g_j(x_k) \neq 0$ for $j = 1,2$ and $1 \le k \le m$, since $d(x_k) \neq 0$ and $d/g_j \in L^2(\mathbb{R})$ by assumption. Separating real and imaginary parts in (28), we see from (2a) that $g_2(x_k) = g_1(x_k)$ for $1 \le k \le m$ and also that

$$\begin{aligned} J(x_k) &:= \lim_{\varepsilon\to 0}\int_{\varepsilon<|t-x_k|} d(t)\frac{g_2(t)-g_1(t)}{g_1(t)g_2(t)}\frac{dt}{t-x_k} \\ &= \int_{-\infty}^{\infty} d(t)\frac{g_2(t)-g_1(t)}{g_1(t)g_2(t)}\frac{dt}{t-x_k} = 0, \end{aligned} \tag{30}$$

where we omitted the principal value in the integral because *we claim* that the integrand is in fact non-singular. Indeed, even though g_1 and g_2 may have real zeros (some of which may be common to g_1 and g_2), the fraction $d(g_2-g_1)/g_1g_2$ has no pole on $\mathbb{R}$; for if λ is a zero of g_j with multiplicity μ_j and, say, $\mu_1 \ge \mu_2$, then λ is a zero of d with multiplicity at least μ_1 (as $d/g_1 \in L^2(\mathbb{R})$) and it is a zero of (g_2-g_1) of multiplicity at least μ_2. Moreover, λ cannot coincide with x_k by our assumption that $d(x_k) \neq 0$, while we observed already that $g_2 - g_1$ vanishes at x_k. *This proves the claim.*

Similarly we get from (29) and 2b that $\forall k \in \{1\dots l\}$

$$I(z_k) = \int_{-\infty}^{\infty} d(t)\frac{g_2(t)-g_1t)}{g_1(t)g_2(t)}\frac{dt}{t-z_k} = 0, \tag{31}$$

and taking conjugates

$$\overline{I(z_k)} = \int_{-\infty}^{\infty} d(t) \frac{g_2(t)-g_1(t)}{g_1(t)g_2(t)} \frac{dt}{t-\overline{z_k}} = 0. \tag{32}$$

We combine linearly equations (31), (32) and (30) using arbitrary complex coefficients $a = (a_1, \dots, a_l)^T$, $b = (b_1, \dots, b_l)^T$ and $c = (c_1, \dots, c_m)^T$ to obtain

$$\sum_{k=1}^{l} (a_k I(z_k)) + \sum_{k=1}^{l} (b_k \overline{I(z_k)}) + \sum_{k=1}^{m} c_k J(x_k) = 0.$$

Putting everything over a common denominator yields

$$\int_{-\infty}^{\infty} d(t) \frac{g_2(t)-g_1(t)}{g_1(t)g_2(t)\prod_{k=1}^{l}|t-z_k|^2} \frac{P_{a,b,c}(t)dt}{\prod_{k=1}^{m}(t-x_k)} = 0, \tag{33}$$

where $P_{a,b,c}$ is the polynomial defined by

$$\begin{aligned} P_{a,b,c}(z) = &\sum_{k=1}^{l} a_k \prod_{j=1\dots l, j\neq k} (z-z_j) \prod_{j=1\dots l} (z-\overline{z_j}) \prod_{j=1\dots m} (z-x_j) + \\ &\sum_{k=1}^{l} b_k \prod_{j=1\dots l} (z-z_j) \prod_{j=1\dots l, j\neq k} (z-\overline{z_j}) \prod_{j=1\dots m} (z-x_j) + \\ &\sum_{k=1}^{m} c_k \prod_{j=1\dots l} (z-z_j) \prod_{j=1\dots l} (z-\overline{z_j}) \prod_{j=1\dots m, j\neq k} (z-x_j). \end{aligned} \tag{34}$$

The $2l+m$ polynomials obtained by setting a_k, b_k, and c_k to 0 except for one of them which is set to 1 forms the Lagrange interpolating basis of $\mathbf{P}_{2l+m-1}$ at the points $\{x_j, z_k, \bar{z}_k\}$. Therefore $P_{a,b,c}$ ranges over $\mathbf{P}_{2l+m-1}$ as (a,b,c) ranges over $\mathbb{C}^m \times \mathbb{C}^l \times \mathbb{C}^l$. Observing now that $g_2 - g_1$ vanishes at the x_k, (33) can be rewritten as

$$\int_{-\infty}^{\infty} d(t) \frac{P(t)P_{a,b,c}(t)}{g_1(t)g_2(t)\prod_{k=1}^{l}|t-z_k|^2} dt = 0, \tag{35}$$

where $P(t)$ is the polynomial $(g_2(t)-g_1(t))/\prod_1^m(t-x_k)$. Note that P has degree at most $2N-1 = 2l+2m-1$ (for g_1, g_2 are monic of degree N). Hence, we can choose (a,b,c) so that $P_{a,b,c} = P$, and then we conclude from (35) that

$$\frac{d(t)P^2(t)}{g_1(t)g_2(t)\Pi_{k=1}^{l}|t-z_k|^2} = 0, \qquad t \in \mathbb{R},$$

because it is everywhere non-negative and its integral is zero. Since d is not identically zero, we get that $P = 0$ and consequently that $g_2 = g_1$. This proves property 2.

As to property 3, observe that if $g \in \overset{\circ}{\mathbf{PE}}{}_{2N}^{+}$ (*i.e.* if $g \in \mathbf{PM}_{2N}^{+}$ has no real root, see discussion before Proposition 2), then d/g lies in in $L^2(\mathbb{R})$ hence also in $H^2(\mathbb{C}^-)$, and θ is well-defined by (27). Next, we compute the derivatives of $Y_{d,g}(x_k)$, $Y_{d,g}(z_k)$ with respect to the coefficients of g. Put

$$g(x) = x^{2N} + g_{2N-1}x^{2N-1} + \dots + g_0.$$

Since $\chi_g = \varphi_N(g)$, we get from (16) that $\partial\chi_g/\partial g_j$ exists in $\mathbf{P}_{N-1}$ for $0 \le j \le 2N-1$, and that

$$\chi_g^*(x)\frac{\partial\chi_g}{\partial g_j}(x) + \chi_g(x)\frac{\partial\chi_g^*}{\partial g_j}(x) = x^j \tag{36}$$

(note that $(\partial\chi_g/\partial g_j)^* = \partial\chi_g^*/\partial g_j$ since $*$ is a linear operation). Moreover, by property 1 already proved, $\pi_{d,g}$ is the solution to (1b) which is a nonsingular linear equation (for χ_g and χ_g^* are now coprime since they have no real root) whose coefficients depend linearly on the coefficients of χ_g. Hence $\partial\pi_{d,g}/\partial g_j$ also exists in $\mathbf{P}_{N-1}$, $0 \le j \le 2N-1$, and by the Leibnitz rule we have that

$$\chi_g^* \frac{\partial \pi_{d,g}}{\partial g_j} + \pi_{d,g}\frac{\partial \chi_g^*}{\partial g_j} + \chi_g \frac{\partial \pi_{d,g}^*}{\partial g_j} + \pi_{d,g}^* \frac{\partial \chi_g}{\partial g_j} = 0. \tag{37}$$

From the differentiability of χ_g, $\pi_{d,g}$ just pointed out, we get since evaluation at x_k is a linear operation and because $\chi_g(x_k) \neq 0$ that

$$\frac{\partial}{\partial g_j}\big(Y_{d,g}(x_k)\big) = F_{d,g,j}(x_k), \tag{38}$$

where

$$F_{d,g,j} = \frac{(\partial\pi_{d,g}/\partial g_j)\chi_g - \pi_{d,g}(\partial\chi_g/\partial g_j)}{\chi_g^2} \tag{39}$$

is a rational function in $H^2(\mathbb{C}^-)$ as it is the ratio of a polynomial of degree at most $2N-1$ by a stable polynomial of degree $2N$ (namely χ_g^2). Using (39), (37), (1b), (36) and the fact that $\chi_g = \varphi_N(g)$, we compute

$$\begin{aligned}
F_{d,g,j}(x) + F_{d,g,j}^*(x) &= \frac{\left(\frac{\partial\pi_{d,g}}{\partial g_j}\chi_g - \pi_{d,g}\frac{\partial\chi_g}{\partial g_j}\right)(\chi_g^*)^2 + \left(\frac{\partial\pi_{d,g}^*}{\partial g_j}\chi_g^* - \pi_{d,g}^*\frac{\partial\chi_g^*}{\partial g_j}\right)\chi_g^2}{\chi_g^2(\chi_g^*)^2}(x) \\
&= \frac{\left(\frac{\partial\pi_{d,g}}{\partial g_j}\chi_g^* + \frac{\partial\pi_{d,g}^*}{\partial g_j}\chi_g\right)\chi_g\chi_g^* - \left(\pi_{d,g}\frac{\partial\chi_g}{\partial g_j}(\chi_g^*)^2 + \pi_{d,g}^*\frac{\partial\chi_g^*}{\partial g_j}\chi_g^2\right)}{g^2}(x) \\
&= \frac{-\left(\frac{\partial\chi_g}{\partial g_j}\pi_{d,g}^* + \frac{\partial\chi_g^*}{\partial g_j}\pi_{d,g}\right)\chi_g\chi_g^* - \left(\pi_{d,g}\frac{\partial\chi_g}{\partial g_j}(\chi_g^*)^2 + \pi_{d,g}^*\frac{\partial\chi_g^*}{\partial g_j}\chi_g^2\right)}{g^2}(x) \\
&= \frac{-\frac{\partial\chi_g}{\partial g_j}\left(\pi_{d,g}^*\chi_g + \pi_{d,g}\chi_g^*\right)\chi_g^* - \frac{\partial\chi_g^*}{\partial g_j}\left(\pi_{d,g}\chi_g^* + \pi_{d,g}^*\chi_g\right)\chi_g}{g^2}(x) \\
&= -\frac{\left(\frac{\partial\chi_g}{\partial g_j}\chi_g^* + \frac{\partial\chi_g^*}{\partial g_j}\chi_g\right)d}{g^2}(x) = -\frac{d(x)x^j}{g^2(x)}.
\end{aligned} \tag{40}$$

Since $F_{d,g} + F_{d,g}^* = 2\Re F_{d,g}$ on $\mathbb{R}$, we obtain from (26), (38) and the previous computation:

$$\frac{\partial Y_{d,g}(x_k)}{\partial g_j} = -\frac{d(x_k)x_k^j}{2g^2(x_k)} - \frac{i}{2\pi}\lim_{\varepsilon\to 0^+}\int_{|x_k-t|>\varepsilon}\frac{d(t)t^j}{g^2(t)(t-x_k)}\,dt, \tag{41}$$

and combining linearly these partial derivatives leads us to the formula

$$D\big(Y_{d,g}(x_k)\big)[\delta g] = \frac{-d(x_k)\delta g(x_k)}{2g^2(x_k)} - \frac{i}{2\pi}\lim_{\varepsilon\to 0}\int_{\varepsilon<|t-x_k|}\frac{d(t)\delta g(t)}{g(t)^2}\frac{dt}{t-x_k}, \quad \forall \delta g \in \mathbf{P}_{\mathbb{R},2N-1}. \tag{42}$$

The companion formula

$$D\big(Y_{d,g}(z_\ell)\big)[\delta g] = \frac{-i}{2\pi}\int_{-\infty}^{\infty}\frac{d(t)\delta g(t)}{g(t)^2}\frac{dt}{t-z_\ell}, \quad \forall\, \delta g \in \mathbf{P}_{\mathbb{R},2N-1} \tag{43}$$

is obtained in the same manner, appealing to (24) rather than (26). Hereafter, we drop the dependence on d, g and we write for simplicity Y_{x_k} (resp Y_{z_ℓ}) instead of $Y_{d,g}(x_k)$ (resp. $Y_{d,g}(z_\ell)$). Then, we find that the

application θ is differentiable with derivative

$$D\theta(g) : \delta g \in \mathbf{P}_{\mathbb{R},2N-1} \to \begin{pmatrix} DY_{x_1}(\delta g)) \\ \vdots \\ DY_{x_1}(\delta g) \\ DY_{z_1}(\delta g) \\ \vdots \\ DY_{z_l}(\delta g) \end{pmatrix} \in \mathbb{C}^N, \tag{44}$$

where $DY_{x_k}(\delta g)$ is given by (42) and $DY_{z_\ell}(\delta g)$ by (43).

Now, suppose that $\delta g \in \ker(D\theta)$. Separating real and imaginary parts in (42), we see that δg vanishes at every x_k. Consequently the principal value of the integral in (42) can be omitted, and this integral is zero for all x_k. Moreover, the integrals in (43) vanish for all z_ℓ. Thus, equating to zero an arbitrary linear combination of the integrals in (42) and those in (43) together with their conjugates, as x_k ranges over $\{x_1, \cdots, m\}$ and z_ℓ ranges over $\{z_1, \cdots, z_l\}$, we get in the same manner as we got (35) that

$$\forall P_{a,b,c} \in \mathbf{P}_{2l+m-1}, \ \int_{-\infty}^{\infty} d(t) \frac{\hat{\delta} g(t) P_{a,b,c}(t)}{g^2(t) \prod_{\ell=1}^{l} |t - z_\ell|^2} \, dt = 0, \tag{45}$$

where $\hat{\delta} g$ is the real polynomial $\delta g / \prod_1^m (t - x_k)$. Picking $P_{a,b,c} = \hat{\delta} g$ in (45), we conclude since the integrand is nonnegative that $\hat{\delta} g = 0$, hence also $\delta g = 0$. Therefore $D\theta(g)$ is injective, thus it is invertible and θ is a local diffeomorphism. Finally, we know from property 2 that θ is injective, therefore it is a diffeomorphism from $\overset{\circ}{\mathbf{PM}}{}_{2N}^{+}$ onto its image. ∎

4.3. Injectivity of ψ. We can now establish that the map ψ introduced in (12) is one-to-one.

PROPOSITION 5. *The map ψ is injective.*

Proof. Let $v = (\gamma_1, \ldots, \gamma_m, \beta_1, \ldots, \beta_m) \in \mathbb{D}^m \times \mathbb{P}_Z^+$ and assume that there exist distinct polynomials $p_1(z)$ and $p_2(z)$ in $\mathbf{PM}_N$ such that $\psi(p_1) = \psi(p_2)$. Put $q_j = \varphi_N(p_j p_j^* + rr^*)$ for $j = \{1, 2\}$, so that our assumption means:

$$\frac{p_1}{q_1}(x_k) = \frac{p_2}{q_2}(x_k), \ 1 \le k \le m, \quad \text{and} \quad \frac{p_1}{q_1}(z_\ell) = \frac{p_2}{q_2}(z_\ell), \ 1 \le l \le l. \tag{46}$$

By the Feldtkeller equation (6), $|p_j(t)/q_j(t)| \le 1$ for $t \in \mathbb{R}$, and $|p_j(t)/q_j(t)| = 1$ exactly when t is a real zero of r with multiplicity $\mu \ge 1$ which is not a zero of p_j of multiplicity greater than, or equal to μ; here, when p_j and q_j both vanish at t, the value $p_j(t)/q_j(t)$ is understood as the limit of $p_j(\tau)/q_j(\tau)$ when $\tau \to t$. In particular, there are at most $\deg r$ real numbers t for which $|p_j(t)/q_j(t)| = 1$, hence we can find a complex number ξ of modulus 1, distinct from -1, such that $1 + \xi p_j/q_j$ is never zero on $\mathbb{R}$ for $j = \{1, 2\}$. Consider the rational functions G_j, Y_j defined by

$$\begin{aligned} G_j(z) &\overset{def}{=} \frac{1 - \xi \frac{p_j(z)}{q_j(z)}}{1 + \xi \frac{p_j(z)}{q_j(z)}} = \frac{1-\xi}{1+\xi} + \left(\frac{2\xi}{1+\xi} \right) \frac{q_j(z) - p_j(z)}{q_j(z) + \xi p_j(z)} \\ &\overset{def}{=} \frac{1-\xi}{1+\xi} + Y_j(z). \end{aligned} \tag{47}$$

Being the Cayley transform of the Schur function $\xi p_j/q_j$, the function G_j is a Carathédory function and so is Y_j as it differs from G_j by the pure imaginary constant $(1-\xi)/(1+\xi)$. Now, our choice of

ξ ensures the continuity of G_j, hence of Y_j, on the real axis. Moreover Y_j vanishes at infinity, since $\deg(p_j - q_j) \leq N-1$ while $\deg(q_j + \xi p_j) = N$, therefore Y_j lies in $H^2(\mathbb{C}^-)$. A computation similar to (21) then yields that

$$Y_j + Y_j^* = G_j + G_j^* = \frac{2rr^*}{(q_j+\xi p_j)(q_j+\xi p_j)^*}. \tag{48}$$

We can apply Theorem 4 to $d = 2rr^*/|1+\xi|^2$ and $g_j = (q_j+\xi p_j)(q_j+\xi p_j)^*/|1+\xi|^2$, because on $\mathbb{R}$ we have that $d/g_j = \Re Y_j$ is square summable. So, if we set

$$\chi_j = \frac{q_j+\xi p_j}{1+\xi} \quad \text{and} \quad \pi_j = \left(\frac{2\xi}{(1+\xi)^2}\right)(q_j - p_j), \tag{49}$$

□

we see from (48), since $Y_j = \pi_j/\chi_j$, that the pair of polynomials χ_j, π_j satisfies assertions (1a), (1b), (1c) of that theorem. Therefore $\chi_j = \chi_{g_j}$ and $\pi_j = \pi_{d,g_j}$, hence property 2 of Theorem 4 implies that $\pi_1 = \pi_2$ and $\chi_1 = \chi_2$, consequently $p_1 = p_2$.

4.4. Properness of ψ. Recall that a map is called *proper* if the preimage of a compact set is compact.

PROPOSITION 6. *The map $\psi : \mathbf{PM}_N \to \mathbb{D}^m \times \mathbb{P}_Z^+$ defined in (12) is proper.*

Proof. Let $K \subset \mathbb{D}^m \times \mathbb{P}^+$ be compact and put $W = \psi^{-1}(K)$. By the continuity of ψ, W is closed. Thus, it remains to prove that W is bounded in $\mathbf{PM}_N$.

Assume for a contradiction that there is an unbounded sequence p_n in $\psi^{-1}(K)$, and let us write $\psi(p_n) = (\gamma_1^{\{n\}}, \cdots, \gamma_m^{\{n\}}, \beta_1^{\{n\}}, \cdots \beta_l^{\{n\}})$. By definition $\gamma_j^{\{n\}} = p_n(x_k)/q_n(x_k)$ and $\beta_\ell^{\{n\}} = p_n(z_\ell)/q_n(z_\ell)$ with $q_n = \varphi_N(p_n p_n^* + rr^*)$, *cf.* Proposition 2, item *c*). Extracting a subsequence if necessary, we may assume that $\psi(p_n)$ converges to some $(\gamma_1, \cdots, \gamma_m, \beta_1, \cdots, \beta_l) \in K$ in $\mathbb{D}^m \times \mathbb{P}_Z^+$. For each n, by Euclidean division of $p_n(t)$ by $L(t) := \Pi_{k=1}^m (t - x_k)$, we can write

$$p_n(t) = \sum_{k=1}^m p_n(x_k) L_{x_k}(t) + L(t) h_n(t) \tag{50}$$

where $L_{x_k}(t) = \prod_{\substack{1 \leq j \leq m \\ j \neq k}} \frac{t-x_j}{x_k - x_j}$ is the k-th Lagrange interpolation polynomial of the set $\{x_1, \ldots x_m\}$ and h_n is a monic polynomial of degree $N - m = l$. It may of course happen that $m = 0$ (if there is no x_k), in which case we set $L \equiv 1$ and $L_{x_k} \equiv 0$; then $h_n = p_n$. To the opposite, it may be that $l = 0$ (if there is no z_ℓ) in which case $h_n = 1$.

Let $\|p_n\|$ indicate the norm of p_n in $\mathbf{PM}_N \sim \mathbb{C}^N$. The precise norm that we use is irrelevant for they are all equivalent. Since $p_n/\|p_n\|$ is bounded whereas $\|p_n\|$ is not, we may assume upon taking another subsequence if necessary that $\|p_n\| \to +\infty$ and $p_n/\|p_n\| \to g$ where $g \in \mathbf{P}_N$ is such that $\|g\| = 1$. In another connection, using (6), one easily checks that

$$\forall k \in \{1 \ldots m\} \; |p_n(x_k)|^2 = \frac{\left|\gamma_k^{\{n\}}\right|^2}{1 - \left|\gamma_k^{\{n\}}\right|^2} |r(x_k)|^2, \tag{51}$$

and since $\gamma_k^{\{n\}} \to \gamma_k \in \mathbb{D}$ we conclude that $p_n(x_k)$ is bounded independently of n. Then, dividing (50) by $\|p_n\|$ and letting $n \to \infty$, we get that $g = Lh$ where h is the limit of $h_n/\|p_n\|$. Observe that $h \in \mathbf{P}_{l-1}$ for $h_n/\|p_n\|$ has leading coefficient $1/\|p_n\| \to 0$ as $n \to \infty$. If $l = 0$ we are done, because then $h = 0$, contradicting the fact that $\|g\| = 1$.

Suppose next that $l > 0$ and rewrite the Feldtkeller equation after division by $\|p_n\|^2$ as

$$\frac{p_n p_n^*}{\|p_n\|^2} + \frac{rr^*}{\|p_n\|^2} = \varphi_{z_1}\left(\frac{p_n p_n^*}{\|p_n\|^2} + \frac{rr^*}{\|p_n\|^2}\right)\left(\varphi_{z_1}\left(\frac{p_n p_n^*}{\|p_n\|^2} + \frac{rr^*}{\|p_n\|^2}\right)\right)^*, \tag{52}$$

where the map φ_{z_1} defined in Proposition 2 item a) has been used since the polynomial $p_n p_n^*/\|p_n\|^2 + rr^*/\|p_n\|^2$ fails to be monic. Because φ_{z_1} is continuous except at 0, as shown in that proposition, and since $rr^*/\|p_n\|^2 \to 0$ while $p_n p_n^*/\|p_n\|^2 \to gg^* \neq 0$, we get from (52) that $\varphi_{z_1}((p_n p_n^* + rr^*)/\|p_n\|^2)$ converges to $\varphi_{z_1}(gg^*)$ in $\mathbf{P}_N$ as $n \to \infty$. Moreover, as $q_n/\|p_n\| = a_n \varphi_{z_1}\left((p_n p_n^* + rr^*)/\|p_n\|^2\right)$ for some $a_n \in \mathbb{C}$ with $|a_n| = 1$ by Proposition 2, we may assume upon extracting another subsequence that $a_n \to a$ with $|a| = 1$ and therefore that $q_n/\|p_n\| \to a\varphi_{z_1}(gg^*)$. In addition, since $L = L^*$ has only real roots, it holds that $\varphi_{z_1}(gg^*) = bL\varphi_{z_1}(hh^*)$ for some $b \in \mathbb{C}$ with $|b| = 1$. Therefore, because convergence in $\mathbf{P}_N$ implies pointwise convergence on $\mathbb{C}$ and since $\varphi_{z_1}(gg^*)$ has no zeros in $\mathbb{C}^-$ by definition of φ_{z_1}, we have that

$$\beta_\ell = \lim_{n\to\infty} \beta_\ell^{\{n\}} = \lim_{n\to\infty} \frac{p_n(z_\ell)}{q_n(z_\ell)} = \lim_{n\to\infty} \frac{p_n(z_\ell)/\|p_n\|}{q_n(z_\ell)/\|p_n\|} = \frac{g(z_\ell)}{a\varphi_{z_1}(gg^*)(z_\ell)} = \frac{h(z_\ell)}{ab\varphi_{z_1}(hh^*)(z_\ell)}.$$

Hence the $l \times l$ matrix $P(Z,\beta)$ defined by (9) is the Pick matrix corresponding to the interpolation data $(z_\ell, (h/(ab\varphi_{z_1}(hh^*)))(z_\ell))$, and since $h/(ab\varphi_{z_1}(hh^*))$ is a Blaschke product of degree at most $l-1$ it cannot have full rank, see discussion after (9). This, however, contradicts the fact that $P(Z,\beta)$ is nonsingular by definition of $\mathbb{P}_Z^+$. ∎

4.5. ψ is a homeomorphism. We are now in position to prove the first claim of Theorem1. It will be convenient to invoke a famous result by Brouwer, known as *invariance of the domain* [32, chap. 10, sect. 62]: if $\Omega \subset \mathbb{R}^n$ is open and $f : \Omega \to \mathbb{R}^n$ is continuous and injective, then f is an open map; this means that f maps open sets to open sets. Hence $f(\Omega)$ is open and the inverse map $f^{-1} : f(\Omega) \to \Omega$ is continuous, that is: f is a homeomorphism onto its image.

PROPOSITION 7. *ψ defined in (12) is a homeomorphism from $\mathbf{PM}_N$ onto $\mathbb{D}^m \times \mathbb{P}^+$.*

Proof. We may regard ψ as a map from $\mathbb{R}^{2N}$ into $\mathbb{R}^{2N}$. By Corollary 3 and Proposition 5 it is continuous and injective, hence the image $\psi(\mathbf{PM}_N)$ is open and ψ is a homeomorphism onto this image, by invariance of the domain. In another connection, the properness of ψ implies that $\psi(\mathbf{PM}_N)$ is closed in $\mathbb{D}^m \times \mathbb{P}^+$. Indeed, suppose that $\psi(p_n)$ is a sequence in $\psi(\mathbf{PM}_N)$ that converges to some $\nu \in \mathbb{D}^m \times \mathbb{P}^+$. Because the union of a convergent sequence and its limit is compact, properness entails that we can extract a subsequence (p_{n_k}) converging to some $p \in \mathbf{PM}_N$, and then $\psi(p) = \nu$ by continuity. Hence $\psi(\mathbf{PM}_N)$ contains its limit point ν, thereby showing that it is closed.

Now, being the product of two connected topological spaces, $\mathbb{D}^m \times \mathbb{P}_Z^+$ is connected. Consequently $\psi(\mathbf{PM}_N)$, which is both open and closed in $\mathbb{D}^m \times \mathbb{P}_Z^+$, is either empty or the whole space. As it is certainly not empty ψ is surjective, as desired.

4.6. ψ is a diffeomorphism where differentiable. We established through Proposition 7 and Corollary 3 that $p \mapsto \psi(p)$ is a homeomorphism $\mathbf{PM}_N \to \mathbb{D}^m \times \mathbb{P}_Z^+$ which is differentiable at every p having no common real root with r. Clearly, such p form an open subset $\mathbf{PM}_N(r) \subset \mathbf{PM}_N$. To complete the proof of Theorem 1, it remains to prove:

PROPOSITION 8. *The map ψ is a diffeomorphism from $\mathbf{PM}_N(r)$ onto its image.*

Proof. We show that, locally, ψ restricted to $\mathbf{PM}_N(r)$ is a composition of diffeomorphisms involving the map θ defined in Theorem 4. This will ensure that ψ is a local diffeomorphism and, since it is a homeomorphism $\mathbf{PM}_N \to \mathbb{D}^m \times \mathbb{P}^+$ by Proposition 7, the proof will be complete.
If $p_0 \in \mathbf{PM}_N(r)$, then the polynomial $q_0 := \varphi_N(p_0 p_0^* + rr^*) \in \mathbf{SBM}_N$ is devoid of real roots. Argueing as we did before (47), there is $\xi \in \mathbb{C}$ of unit modulus, $\xi \neq -1$, such that $1 + \xi p_0/q_0$ is never zero on $\mathbb{R}$, hence $\xi p_0 + q_0$ has no real root and since $|p_0/q_0| < 1$ on $\mathbb{C}^-$ we conclude that $(\xi p_0 + q_0)/(1+\xi) \in \mathbf{SM}_N$.

Since $p_0p_0^*+rr^*\in\overset{\circ}{\mathbf{P}}{}^+_{2N}$ and $\mathbf{SM}_N$ is open in $\mathbf{PM}_N$ (*cf.* discussion before Proposition 2), the smoothness of φ_N around $p_0p_0^*+rr^*$ and the continuity of $p\mapsto pp^*+rr^*$ ensures the existence of a neighborhood V of p_0 in $\mathbf{PM}_N(r)$ such that the map $\eta(p):=(\xi p+\varphi_N(pp^*+rr^*))/(1+\xi)$ is defined and differentiable on V with $\eta(V)\subset\mathbf{SM}_N$. *We claim* that its differential $D\eta$ is invertible at every $p\in V$. Indeed, it is enough to show that $D\eta$ is injective. Set for simplicity $q=\varphi_N(pp^*+rr^*)$ and observe that the kernel of $D\eta(p)$ consists of those $dp\in\mathbf{P}_{N-1}$ for which

$$\xi dp+dq=0 \tag{53}$$

where $dq=D\varphi_N(pdp^*+p^*dp)$ satisfies (*cf.* (16))

$$q^*dq+qdq^*=pdp^*+p^*dp. \tag{54}$$

Combining the last two equations yields

$$\overline{\xi}(\xi p+q)dp^*+\xi(\xi p+q)^*dp=0. \tag{55}$$

The polynomial $(\xi p+q)$ is strictly stable and therefore it is coprime with its paraconjugate, hence it must divide dp by (55). Since dp has degree at most $N-1$ while $(\xi p+q)$ has degree N (remember $\xi\neq-1$), this yields $dp=0$ which *proves the claim*. Thus, η is a diffeormophism when restricted to V, in particular, $\eta(V)$ is open in $\mathbf{SM}_N$.

Next, consider the map $\mathfrak{m}:\eta(V)\to\overset{\circ}{\mathbf{PM}}{}^+_{2N}$ given by $\mathfrak{m}(v)=vv^*$; to check that $\mathfrak{m}$ indeed maps $\eta(V)$ into the interior of $\mathbf{PM}^+_{2N}$, simply observe that $(\xi p+q)(\xi p+q)^*$ has no real root because so does $(\xi p+q)$ as it is strictly stable. Shrinking V if necessary, we get from Proposition 2 that $\mathfrak{m}$ is the restriction to $\eta(V)$ of φ_N^{-1} and therefore a diffeomorphism onto its image.

Then, putting $g=\eta(p)\eta(p)^*$ and $d=2rr^*/|1+\xi|^2$, we see from Theorem 4 that the map θ defined in (27) allows us to evaluate at the interpolation points $(x_1,\cdots,x_m,z_1,\cdots,z_l)$ the positive real function

$$Y_{d,g}=(q-\xi p)/(q+\xi p)-\frac{1-\xi}{1+\xi}$$

in a diffeomorphic manner with respect to $m(\eta(p))$.

Eventually we need to come back to the "scattering domain", that is, we must compute the values $p(x_k)/q(x_k)$ and $p(z_\ell)/q(z_\ell)$, for $1\le k\le m$ and $1\le\ell\le l$, in terms of the $Y_{d,g}(x_k)$ and the $Y_{d,g}(z_\ell)$ in a diffeomorphic manner. This is easily accomplished by smoothly inverting the correspondence $p_j/q_j\mapsto Y_j$ in equation (47). Specifically, upon defining $\tau:\mathbb{C}^+\to\mathbb{D}$ by

$$\tau(z)=\overline{\xi}\frac{1-\left(\frac{1-\xi}{1+\xi}+z\right)}{1+\left(\frac{1-\xi}{1+\xi}+z\right)},\qquad z\in\mathbb{C}^+, \tag{56}$$

we find that $\tau(Y_{d,g})=p/q$. So, letting $\tau_N:(\mathbb{C}^+)^N\to\mathbb{D}^N$ act componentwise as τ, we find that on V

$$\psi=\tau_N\circ\theta\circ\varphi_N^{-1}\circ\eta \tag{57}$$

which expresses ψ locally as a composition of diffeomorphisms. □

REMARK 4.3. *In the decomposition (57), the maps τ_N and η depend on ξ and therefore on the point p_0 around which we carry out the local analysis of ψ. In fact, there is no global decomposition of ψ in terms of θ, but merely a collection of local ones, taylored so as to associate a non singular Carathéodory function Y (i.e. one having no pole on $\mathbb{R}$) to the initial Schur function (i.e. scattering element) p_0/q_0.*

Proposition 8 s is of practical importance to solve Problem $\mathscr{P}$ numerically, because computationally efficient algorithms for the numerical inversion of ψ can be based on continuation techniques which themselves rely on the differentiability of ψ^{-1}, see Section 5. In this connection, we give below a genericity result that warrants the use of such techniques in the present context.

PROPOSITION 9. *$\psi(\mathbf{PM}_N(r))$ is an open, dense and connected subset of $\mathbb{D}^m \times \mathbb{P}^+$. Suppose that ν_0, ν_1 both lie in $\psi(\mathbf{PM}_N(r))$, and that γ is a continuous path from ν_0 to ν_1 in $\mathbb{D}^m \times \mathbb{P}^+$. Then, for every $\varepsilon > 0$ there exists a continuous path $\hat{\gamma}$ from ν_0 to ν_1 in $\psi(\mathbf{PM}_N(r))$ such that*

$$\sup_{t\in[0,1]} \|\hat{\gamma}(t) - \gamma(t)\| \leq \varepsilon,$$

where $\|.\|$ designates an arbitrary but fixed norm on $\mathbb{R}^{2N} \sim \mathbb{C}^N \supset \mathbb{D}^m \times \mathbb{P}^+$.

Proof. By Proposition 7 ψ is a homeomorphism $\mathbf{PM}_N \to \mathbb{D}^m \times \mathbb{P}^+$. Openness, density and connectedness of $\psi(\mathbf{PM}_N(r))$ in $\mathbb{D}^m \times \mathbb{P}^+$ will thus follow from the corresponding properties of $\mathbf{PM}_N(r)$ in $\mathbf{PM}_N$. These are easily verified, for if $\{\zeta_1, \cdots, \zeta_\mu\}$ are the real roots of r then $\mathbf{PM}_N(r)$ consists of those monic polynomials no root of which coincides with a ζ_j. This is clearly an open condition. Moreover, given any $p(z) = \Pi_{k=1}^N (z - \xi_k)$ in $\mathbf{PM}_N$, we can find ξ_k' arbitrary close to ξ_k which is not a ζ_j, thereby showing the density of $\mathbf{PM}_N(r)$. In addition, two polynomials $\Pi_{j=1}^N (z - \xi_k^{(1)})$ and $\Pi_{j=1}^N (z - \xi_k^{(2)})$ such that neither $\xi_k^{(1)}$ nor $\xi_k^{(2)}$ is a ζ_j can be deformed into each other within $\mathbf{PM}_N(r)$ by a map $t \mapsto \Pi_{j=1}^N (z - \xi_k(t))$ where $t \mapsto \xi_k(t)$, $t \in [0,1]$, is a continuous path from $\xi_k^{(1)}$ to $\xi_k^{(2)}$ in $\mathbb{C}$ which does not meet any ζ_j; hence $\mathbf{PM}_N(r)$ is connected.

Next, pick $\nu_0, \nu_1 \in \psi(\mathbf{PM}_N(r))$ and let $\gamma : [0,1] \to \mathbb{D}^m \times \mathbb{P}^+$ be a continuous map such that $\gamma(0) = \nu_0$ and $\gamma(1) = \nu_1$. Set $F : [0,1] \to \mathbf{PM}_N$ to be $F(t) = \psi^{-1}(\gamma(t))$. Thanks to the Stone-Weiestrass theorem, there is a sequence of polynomial maps $G_n : [0,1] \to \mathbf{PM}_N$ converging uniformly to F; here, by a polynomial map, we mean that each component is a polynomial in t. *We claim* that $\psi(G_n)$ converges uniformly to γ in the space of continuous maps $[0,1] \to \mathbb{D}^m \times \mathbb{P}^+$. To see this, we can select a compact neighborhood K of the compact set $F([0,1])$ in $\mathbf{PM}_N$ and observe, by Heine's theorem, that ψ is uniformly continuous on K. In particular, to each $\varepsilon > 0$, there exists $\delta > 0$ such that, for all $t \in [0,1]$ and $p \in \mathbf{PM}_N$, $||p - F(t)|| \leq \delta \Rightarrow ||\psi(p) - \gamma(t)|| \leq \varepsilon$. Letting $p = G_n(t)$ for n large enough that $\|G_n(t) - F(t)\| \leq \delta$ for all $t \in [0,1]$, we get that $\|\psi(G_n(t)) - \gamma(t)\| \leq \varepsilon$, *thereby proving the claim.*

We now show that γ can be uniformly approximated by paths contained in $\psi(\mathbf{PM}_N(r))$. Given $\varepsilon > 0$, let n_0 be so large that $||\psi(G_{n_0}(t)) - \gamma(t)|| \leq \varepsilon/2$ for all $t \in [0,1]$. For each root ζ_k of r, define a smooth map $\eta_k : [0,1] \to \mathbb{C}$ by $\eta_k(t) = -G_{n_0}(t)[\zeta_k]$, that is, evaluation of the polynomial $-G_{n_0}(t)$ at ζ_k. Sard's theorem [24, App.1] implies that the image of a smooth map from $\mathbb{R}$ into $\mathbb{R}^2$ has Lebesgue measure zero in $\mathbb{R}^2$, hence $\eta_k([0,1])$ has measure zero in $\mathbb{C}$. Therefore we can pick z of arbitrary small modulus in the set $\mathbb{C} \setminus \bigcup_{k=1}^{\mu} \eta_k([0,1])$. In particular, invoking Heine's theorem again, we can select $|z|$ so small that $||\psi(G_{n_0}(t) + z) - \psi(G_{n_0}(t)|| \leq \varepsilon/2$ for $t \in [0,1]$, which means that $||\psi(G_{n_0}(t) + z) - \gamma(t)|| \leq \varepsilon$. By construction, the polynomial $G_{n_0}(t) + z$ vanishes at no ζ_k which indicates that the path γ_1 defined by $\gamma_1(t) = \psi(G(t) + z)$ lies in $\psi(\mathbf{PM}_N(r))$ and uniformly approximates γ within a distance of ε.

Still, γ_1 does not meet our needs because its origin and endpoint need not be equal to ν_0 and ν_1 (although they lie within ε of them). To remedy this, we concatenate γ_1 with small line segments joining ν_0 to $\gamma_1(0)$ and ν_1 to $\gamma_1(1)$ within $\psi(\mathbf{PM}_N(r))$. More precisely, as ν_0 and ν_1 both lie in the open set $\psi(\mathbf{PM}_N(r))$, we can find an open ball therein, centered at ν_0 (resp. ν_1) of radius $\varepsilon_0 < \varepsilon$. Let γ_2 be a path in $\psi(\mathbf{PM}_N(r))$ that uniformly approximates γ within $\varepsilon_0/3$. Such a path exists by the previous part of the proof. By uniform continuity of γ, there exists $\delta > 0$ such that $|t_0 - t_1| \leq \delta \Rightarrow ||\gamma(t_0) - \gamma(t_1)|| \leq \varepsilon_0/3$.

We define the path $\hat{\gamma}$ by:

$$\hat{\gamma}(t) = \begin{cases} (1-\frac{t}{\delta})v_0 + \frac{t}{\delta}\gamma_2(\delta) & \text{if } t \in [0,\delta] \\ \gamma_2(t) & \text{if } t \in [\delta, 1-\delta] \\ (1-\frac{1-t}{\delta})\gamma_2(1-\delta) + \frac{1-t}{\delta}v_1 & \text{if } t \in [1-\delta, 1] \end{cases}$$

The triangular inequality yields that $||\gamma_2(\delta) - v_0|| \leq ||\gamma_2(\delta) - \gamma(\delta)|| + ||\gamma(\delta) - v_0|| \leq \frac{2\varepsilon_0}{3}$, which shows that the line segment between v_0 and $\gamma_2(\sigma)$ lies in $\psi(\mathbf{PM}_N(r))$. The same holds for the segment between $\gamma_2(1-\delta)$ and v_1. Besides, for $t \in [0,\delta]$, we have that

$$||\hat{\gamma}(t) - \gamma(t)|| \leq ||\hat{\gamma}(t) - v_0|| + ||v_0 - \gamma(t)|| \leq \frac{t}{\delta}||\gamma_2(\delta) - v_0|| + \varepsilon_0/3 \leq \varepsilon_0 < \varepsilon.$$

The same inequality holds for $t \in [1-\delta, 1]$, while for $t \in [\delta, 1-\delta]$ the equality $\hat{\gamma}(t) = \gamma_2(t)$ yields $||\hat{\gamma}(t) - \gamma(t)|| \leq \varepsilon_0/3 < \varepsilon$. This concludes the proof. □

4.7. Solution to $\hat{\mathscr{P}}$. Much like Problem $\mathscr{P}$, Problem $\hat{\mathscr{P}}$ can be studied *via* the evaluation map:

$$\hat{\psi}: \quad p \in \mathbf{P}_{\hat{N}} \to \begin{pmatrix} p(x_1)/q(x_1) \\ \vdots \\ p(x_m)/q(x_m) \\ p(z_1)/q(z_1) \\ \vdots \\ p(z_l)/q(z_l) \end{pmatrix}, \tag{58}$$

where, this time, q is computed from p using the maps defined in point b) or c) of Proposition 2 :

$$q = \begin{cases} \varphi_{x_1}(rr^* + pp^*) & \text{if } m > 0, \\ \varphi_{z_1}(rr^* + pp^*) & \text{if } m = 0. \end{cases} \tag{59}$$

Note that definition (59) is always legitimate, for $pp^* + rr^*$ is not the zero polynomial since $r \not\equiv 0$, and if $m > 0$ then $pp^* + rr^*$ cannot vanish at x_1 because $r(x_1) \neq 0$ by assumption.

Hereafter, we say that a polynomial $p \in \mathbf{P}_{\hat{N}}$ has n zeros at infinity if p has degree $\hat{N} - n$. Zeros at infinity are considered to lie on the real line.

The exact analog of Theorem 1 holds, namely:

THEOREM 10. *$\hat{\psi}$ is a homeomorphism from $\mathbf{P}_{\hat{N}}$ onto $\mathbb{D}^m \times \mathbb{P}^+$. The restriction of $\hat{\psi}$ to those $p \in \mathbf{P}_{\hat{N}}$ having no common real root with r (including at infinity) is a diffeomorphism onto its image.*

Remark 4.1 applies to Theorem 10 as well as to Theorem 1. It is worth emphasizing that the condition that p and r have no common zero at infinity, which is required in Theorem 10 for $\hat{\psi}$ to be a local diffeomorphism at p, means that one of them at least has exact degree $\hat{N}$.

The proof closely follows the path to Theorem 1 but with one significant difference, namely the analog of Y_j in (47), though still bounded, may no longer vanish at infinity. Thus, it needs not belong to $L^2(\mathbb{R})$ and Theorem 4 does not apply. Below, we state and prove a modified version of that theorem which is valid when d/g is merely bounded on $\mathbb{R}$. Subsequently, we outline a proof of Theorem 10 which runs parallel to that of Theorem 1. The statement refers to the notion of a smooth embedded manifold of dimension n_1 in $\mathbb{R}^{n_2}$, namely a subset of $\mathbb{R}^{n_2}$ which is locally the image of a C^∞-map $\Upsilon : U \to \mathbb{R}^{n_2}$, with $U \subset \mathbb{R}^{n_1}$ an open set, such that Υ is injective together with its derivative. Beyond this basic terminology, we use only two elementary facts from differential geometry, namely that the preimage of a manifold

under a submersion (*i.e.* a map with surjective derivative) is a manifold with the same codimension, and that the image of a manifold under an immersion (*i.e.* a map with injective derivative) is locally a manifold of the same dimension, see *e.g.* [24, Ch. 1] or [37, Ch. 1]. In what follows, depending on whether $m>0$ or $m=0$, the normalization induced by (59) is either $q(x_1)>0$ or $q(z_1)>0$. We shall detail the proofs when $m>0$, and indicate briefly the changes when $m=0$.

THEOREM 11. *Let $d\in\mathbf{P}^+_{2\hat{N}}$ and $(x_1,\cdots,x_m)^T\in\mathbb{R}^m$, $(z_1,\cdots,z_l)^T\in(\mathbb{C}^-)^l$, with $m+l=\hat{N}+1$. Assume that $d(x_k)\neq 0$ for $k\in\{1,\cdots,m\}$. Then, the following three properties hold.*

1. *For each $g\in\mathbf{P}^+_{2\hat{N}}$ such that $\frac{d}{g}\in L^\infty(\mathbb{R})$, there uniquely exist polynomials $\chi_g\in\mathbf{SB}_{\hat{N}}$ and $\pi_{d,g}\in\mathbf{P}_{\hat{N}}$, with $\chi_g(x_1)>0$ (resp. $\chi_g(z_1)>0$ if $m=0$), such that the rational function $Y_{d,g}=\frac{\pi_{d,g}}{\chi_g}$ satisfies:*
   (a) $Y_{d,g}\in H^\infty(\mathbb{C}^-)$,
   (b) $\pi_{d,g}\chi_g^*+\pi_{d,g}^*\chi_g=d$,
   (c) $\Im(Y_{d,g}(x_1))=0$ (resp. $\Im(Y_{d,g}(z_1))=0$ if $m=0$),
   (d) $Y_{d,g}+Y_{d,g}^*=\frac{d}{g}$.
2. *Let g_1,g_2 in $\mathbf{P}^+_{2\hat{N}}$ be such that $\frac{d}{g_1}$ and $\frac{d}{g_2}$ are in $L^\infty(\mathbb{R})$. If*
   (a) $\forall k\in\{1..m\}\ Y_{d,g_1}(x_k)=Y_{d,g_2}(x_k)$,
   (b) $\forall k\in\{1..l\}\ Y_{d,g_1}(z_k)=Y_{d,g_2}(z_k)$,
   then $g_1=g_2$ whence $\pi_{d,g_1}=\pi_{d,g_2}$ and $\chi_{g_1}=\chi_{g_2}$, by 1.
3. *For fixed d, the evaluation map $\hat{\theta}:\overset{\circ}{\mathbf{PE}}{}^+_{2\hat{N}}\to\mathbb{R}\times\mathbb{C}^{\hat{N}}$ given by*

$$\hat{\theta}(g)=\begin{pmatrix} Y_{d,g}(x_1)\\ \vdots\\ Y_{d,g}(x_m)\\ Y_{d,g}(z_1)\\ \vdots\\ Y_{d,g}(z_l)\end{pmatrix} \tag{60}$$

   is well-defined and a diffeomorphism onto its image (observe that if $m>0$ then $Y_{d,g}(x_1)$ is real-valued and all other components of $\hat{\theta}$ are complex valued, whereas if $m=0$ then there are no x_k and $Y_{d,g}(z_1)$ is real valued while other components are complex valued).
4. *The set $\mathscr{M}_{2\hat{N}}(d)=\hat{\theta}^{-1}(\{1\}\times\mathbb{C}^{\hat{N}})$ is a smooth embedded submanifold of of $\overset{\circ}{\mathbf{PE}}{}^+_{2\hat{N}}$ of dimension $2\hat{N}$. For G the canonical projection from $\mathbb{R}\times\mathbb{C}^{\hat{N}}$ onto $\mathbb{C}^{\hat{N}}$ given by $(x,y_1\dots y_{\hat{N}})^t\to(y_1,\dots y_{\hat{N}})^t$, the map $\hat{\theta}_{red}\overset{def}{=}G\circ\hat{\theta}:\mathscr{M}_{2\hat{N}}(d)\to\mathbb{C}^{\hat{N}}$ is a diffeomorphism onto its image. Moreover, it holds that*

$$\mathscr{M}_{2\hat{N}}(d)=\left\{g\in\overset{\circ}{\mathbf{PE}}{}^+_{2\hat{N}},\ g(x_1)=d(x_1)/2\right\} \tag{61}$$

$$\left(\text{resp. }\mathscr{M}_{2\hat{N}}(d)=\left\{g\in\overset{\circ}{\mathbf{PE}}{}^+_{2\hat{N}},\ \int_{-\infty}^{\infty}\frac{d(t)}{g(t)}\frac{dt}{|t-z_1|^2}=-\frac{2\pi}{\Im(z_1)}\right\}\ \text{ if } m=0\right). \tag{62}$$

Proof. As to property 1, observe from (1b) and (1d) that necessarily $\chi_g=\varphi_{x_1}(g)$ (resp. $\varphi_{z_1}(g)$ if $m=0$) . Let us check that equation (1b) is then solvable with respect to $\pi_{d,g}\in\mathbf{P}_{\hat{N}}$. In doing so, we may as well assume that $2\hat{N}$ is the exact degree of g, and therefore that $\deg d\leq 2\hat{N}$ (since $d/g\in L^\infty(\mathbb{R})$) as well as $\deg\chi_g=\hat{N}$. Let Δ be the monic g.c.d. of χ_g and χ_g^*. Clearly all roots of Δ are real, and $\Delta=\Delta^*$. Of necessity, Δ^2 divide g, therefore also d since $d/g\in L^\infty(\mathbb{R})$. Since χ/Δ and χ^*/Δ are coprime,

we can certainly solve the Bezout-type equation $A\chi_g^*/\Delta + B\chi_g/\Delta = d/\Delta^2$ with $A, B \in \mathbf{P}_{\hat{N}-\deg_\Delta}$. Since $(d/\Delta^2)^* = d/\Delta^2$, we may replace A with $A_1 = (A+B^*)/2$ and B with $B_1 = (A^*+B)/2$. Then, $\pi_{d,g} = \Delta A_1$ solves for (1b) and (1d) is satisfied by construction. Equation (1b) characterizes $\pi_{d,g}$ up to the addition of a pure imaginary multiple of χ_g only, but the latter is determined by condition (1c). Clearly $Y_{d,g}$ just constructed belongs to $H^\infty(\mathbb{C}^-)$, because it is a rational Carathéodory function with no pole on $\mathbb{R}$ since Δ divides $\pi_{d,g}$. This shows both existence and uniqueness of the pair $\chi_g, \pi_{d,g})$.

We turn to property 2. Note that the vanishing at infinity of $Y_{d,g}$ in Theorem 4 (induced by the condition $\deg \chi_g = N > N-1 \geq \deg \pi_{d,g}$) is replaced here by the normalization condition (1c) at some interpolation point. This is to the effect that $Y_{d,g}$ (which belongs to $H^\infty(\mathbb{C}^-)$) may not belong to $H^2(\mathbb{C}^-)$ because it may not vanish at infinity. For that reason, slightly different kernels than those in (28) and (29) are required to represent $Y_{d,g}$ in terms of its real part on $\mathbb{R}$. Below, we discuss the case where $m > 0$ so that (1c) bears on x_1.

First, let d, g, χ_g and $Y_{d,g}$ be as before. Then, it holds by (1c), (1d) that

$$Y_{d,g}(x_1) = \frac{d}{2g}(x_1). \tag{63}$$

By Euclidean division, we can write $Y_{d,g}(z) = C + H(z)$ where $H \in H^2(\mathbb{C}^-)$ and $C = Y_{d,g}(\infty)$ is a complex constant. Since $C = Y_{d,g}(x_1) - H(x_1)$, we get from (1c) and (25) that

$$\Im(C) = -\frac{i}{\pi} \lim_{\varepsilon \to 0^+} \int_{|x_1 - t| > \varepsilon} \frac{\Re(H(t))}{t - x_1}\, dt, \tag{64}$$

ensuing by (1d) and (25) again that

$$\begin{aligned} Y_{d,g}(x_k) &= \frac{d}{2g}(x_k) + \frac{i}{\pi} \lim_{\varepsilon \to 0} \int_{\substack{\varepsilon < |t - x_k| \\ \varepsilon < |t - x_1|}} \Re(H(t)) \left(\frac{dt}{t - x_k} - \frac{dt}{t - x_1} \right) \\ &= \frac{d}{2g}(x_k) + \frac{i}{\pi} \lim_{\varepsilon \to 0} \int_{\substack{\varepsilon < |t - x_k| \\ \varepsilon < |t - x_1|}} \Re(H(t)) \frac{(x_k - x_1)dt}{(t - x_k)(t - x_1)}. \end{aligned} \tag{65}$$

In another connection, it is elementary to check that

$$\lim_{\varepsilon \to 0} \int_{\substack{\varepsilon < |t - x_k| \\ \varepsilon < |t - x_1|}} \frac{dt}{(t - x_k)(t - x_1)} = 0, \tag{66}$$

therefore $\Re(H)$ may be replaced by $\Re(Y_{d,g})$ under the integral sign in (65) to yield

$$Y_{d,g}(x_k) = \frac{d}{2g}(x_k) + \frac{i}{2\pi} \lim_{\varepsilon \to 0} \int_{\substack{\varepsilon < |t - x_k| \\ \varepsilon < |t - x_1|}} \frac{d(t)}{g(t)} \frac{(x_k - x_1)dt}{(t - x_k)(t - x_1)}, \qquad k \in \{2 \dots m\}, \tag{67}$$

where we used (1d) again. Note that the kernel in (67) decays like $|t|^{-2}$ for large $|t|$, hence this singular integral makes sense even though d/g may not vanish at infinity. In the same manner, we obtain using (24) instead of (25) that

$$Y_{d,g}(z_\ell) = \frac{i}{2\pi} \int_{\varepsilon < |t - x_1|} \frac{d(t)}{g(t)} \frac{(z_\ell - x_1)dt}{(t - z_\ell)(t - x_1)}, \qquad \ell \in \{1 \dots l\}. \tag{68}$$

Now, let g_1, g_2 be as in property 2. Then, in view of (63) and (67) where we separate real and imaginary parts, we get from property (2a) and (1d) that $g_1(x_k) = g_2(x_k)$ for $1 \leq k \leq m$. Next, writing by (2a) again that $Y_{d,g_1} - Y_{d,g_2}$ vanishes at x_k, z_ℓ for $2 \leq k \leq m$, $1 \leq \ell \leq l$, and adjoining the equations

conjugate to those at z_ℓ while using representations (67) and (68), we get $m+2l-1$ equations that we can linearly combine together so as to get (33), where this time $P_{a,b}$ ranges over $\mathbf{P}_{2l+m-2}$ and again $d(g_1-g_2)/g_1g_2$ has no real pole while g_1-g_2 vanishes at x_k for $1\le k\le m$. Since $(g_1-g_2)/\Pi_{k=1}^m(z-x_k)$ has degree at most $2\hat{N}-m=m+2l-2$, we can pick $P_{a,b}$ to be that polynomial thereby making the integrand nonnegative in (33). Consequently this integrand is identically zero whence $g_1=g_2$, as desired. The case where $m=0$ and (1c) bears on z_1 is similar but easier, since we no longer need (67) and we can base the whole argument on the representing formula

$$Y_{d,g}(z)=\frac{i}{2\pi}\int_{-\infty}^{\infty}\frac{d(t)}{g(t)}\left(\frac{1}{t-z}-\frac{t-\Re(z_1)}{|t-z_1|^2}\right)dt,\qquad z\in\mathbb{C}^-, \tag{69}$$

where we note that the kernel in between parentheses behaves like $|t|^{-2}$ at infinity, locally uniformly with respect to z, so that the integral converges and defines a holomorphic function of $z\in\mathbb{C}^-$ by the boundedness of d/g. To check the validity of (69), observe on the one hand that the right side has real part the Poisson integral of $d/2g$ (recall that the Poisson kernel for $\mathbb{C}^-$ is $\pi^{-1}\Im(1/(z-t))$, compare [21, Ch. I, Eqn. (3.4)]). On the other hand, as $Y_{d,g}$ lies in $H^\infty(\mathbb{C}^-)$, it real part is a bounded harmonic function on $\mathbb{C}^-$ and therefore it is the Poisson integral of its nontangential limit [21, Ch. I, Thm. 5.3]. Therefore both sides of (69) have the same real part, thus they represent the same analytic function in $\mathbb{C}^-$, up to an additive pure imaginary constant. But since $\Im(Y_{d,g}(z_1))=0$, this constant must be zero because it is obvious that the right hand side of (69) is real when $z=z_1$. This confirms that (69) holds.

To prove property 3, first note that $d/g\in L^\infty(\mathbb{R})$ when $g\in\overset{\circ}{\mathbf{PE}}{}^+_{2\hat{N}}$, since the latter consists of strictly positive polynomials on $\mathbb{R}$ having exact degree $2\hat{N}$, see discussion before Proposition 2. Hence $\hat{\theta}$ is well-defined with domain an open subset of $\mathbb{R}^{2\hat{N}+1}$ and values in $\mathbb{R}\times\mathbb{R}^{2\hat{N}}=\mathbb{R}^{2N+1}$ Observe also that χ_g is strictly stable when $g\in\overset{\circ}{\mathbf{PE}}{}^+_{2\hat{N}}$, hence χ_g and χ_g^* are coprime. So, if we write

$$g(x)=g_{2\hat{N}}x^{2\hat{N}}+g_{2\hat{N}-1}x^{2\hat{N}-1}+\cdots+g_0,$$

the differentiability of χ_g with respect to the coefficients g_j follows from (15), while the differentiability of $\pi_{d,g}$ with respect to the g_j comes from the fact that it solves a nonsingular linear system of equations whose coefficients are smooth (in fact: linear) in the coefficients of χ_g. Thus, $\hat{\theta}$ is differentiable, and since it is injective by property 2 it remains to show that its differential $D\hat{\theta}(g)$ is injective (and therefore invertible) at every point g. Assume first that $m>0$. Then, differentiating $Y_{d,g}(x_1)=d(x_1)/(2g(x_1))$, we get since evaluation at x_1 is linear that

$$D_gY_{d,g}(x_1)[\delta g]=-\frac{\delta g(x_1)d(x_1)}{2g^2(x_1)},\qquad \delta g\in\mathbf{P}_{\mathbb{R},2\hat{N}}, \tag{70}$$

where D_g indicates the partial differential with respect to g. Moreover, equations (36) and (37) hold for $0\le j\le 2\hat{N}$, hence (38) and (39) remain valid and we obtain as in (40) that

$$\left(\frac{\partial}{\partial g_j}Y_{d,g}\right)(x)+\left(\frac{\partial}{\partial g_j}Y_{d,g}\right)^*(x)=-\frac{d(x)x^j}{g^2(x)},\qquad 0\le j\le 2\hat{N}.$$

Thus, writing the analogs of (67), (68) for $\partial Y_{d,g}/\partial g_j$ rather than $Y_{d,g}$ and combining the corresponding equations linearly, we find for all $\delta g\in\mathbf{P}_{\mathbb{R},2\hat{N}}$ and $2\le k\le m$ that

$$D_g\big(Y_{d,g}(x_k)\big)[\delta g]=\frac{-d(x_k)\delta g(x_k)}{2g^2(x_k)}-\frac{i(x_k-x_1)}{2\pi}\lim_{\varepsilon\to 0}\int_{\substack{\varepsilon<|t-x_1|\\ \varepsilon<|t-x_k|}}\frac{d(t)\delta g(t)}{g(t)^2}\,\frac{dt}{(t-x_1)(t-x_k)}, \tag{71}$$

while for $1 \leq \ell \leq l$ it holds that

$$D_g\big(Y_{d,g}(z_\ell)\big)[\delta g] = -\frac{i(z_\ell - x_1)}{2\pi}\int_{\varepsilon<|t-x_1|}\frac{d(t)\delta g(t)}{g(t)^2}\,\frac{dt}{(t-x_1)(t-z_\ell)}. \tag{72}$$

Assume now that δg lies in the kernel of $D\hat{\theta}(g)$:

$$D_g Y_{d,g}(x_k)[\delta g] = 0, \quad 1 \leq k \leq m, \tag{73}$$

$$D_g Y_{d,g}(z_\ell)[\delta g] = 0, \quad 1 \leq \ell \leq l. \tag{74}$$

□

In view of (70), and since d vanishes at no x_k by assumption, we deduce firstly from (73) that $\delta g(x_1) = 0$, and secondly taking real parts in (73) and (71) that $\delta g(x_k) = 0$ for $2 \leq k \leq m$. In particular $\hat{\delta g}(x) = \delta g(x)/\Pi_k(x - x_k)$ is a real polynomial, and the principal part of the integral can be omitted in (71) and (72). Next, combining linearly (with arbitrary complex coefficients) the equations (73) for $2 \leq k \leq m$ together with the equations (74) augmented with their conjugates, we get upon substituting therein (71) and (72) while making use of $\delta g(x_k) = 0$ that (45) holds, where this time, $P_{a,b,c}$ ranges over $\mathbf{P}_{2l+m-2}$. Since $\hat{\delta g}$ has degree at most $2\hat{N} - m = 2l + m - 2$, we can pick $P_{a,b,c} = \hat{\delta g}$ thereby making the integrand in (45)non-negative. Therefore the integrand is identically zero, implying that $\delta g = 0$, as desired. The case where $m = 0$ is similar but easier, applying the analog of (69) to $\partial Y_{d,g}/\partial g_j$ rather than $Y_{d,g}$.

As to property 4, remark that $D\hat{\theta}(g)$ is surjective at every $g \in \overset{\circ}{\mathbf{PE}}{}^{+}_{2\hat{N}}$ by property 3. Therefore, the preimage $\hat{\theta}^{-1}(\{1\}\times\mathbb{C}^{\hat{N}})$ of the affine submanifold $\{1\}\times\mathbb{C}^{\hat{N}}$ of $\subset \mathbb{R}\times\mathbb{C}^{\hat{N}}$ is a smooth embedded submanifold of $\overset{\circ}{\mathbf{PE}}{}^{+}_{2\hat{N}}$ with the same codimension, namely 1 (see [24, Ch. 1, p.28]). This shows that $\mathscr{M}_{2\hat{N}}(d)$ is a smooth embedded submanifold of $\overset{\circ}{\mathbf{PE}}{}^{+}_{2\hat{N}}$ of real dimension $2\hat{N}$. Moreover, the tangent space $\mathscr{T}_g\mathscr{M}_{2\hat{N}}(d)$ to $\mathscr{M}_{2\hat{N}}(d)$ at g is the preimage under $D\hat{\theta}(g)$ of the tangent space to $\{1\}\times\mathbb{C}^{\hat{N}}$ at $\hat{\theta}(g)$ which is but $\{0\}\times\mathbb{C}^{\hat{N}}$ (see [24, Ch. 1, p.32, ex. 5]). This implies that $G\circ D\hat{\theta}(g)(v) \neq 0$ whenever $0 \neq v \in \mathscr{T}_g\mathscr{M}_{2\hat{N}}(d)$, otherwise $D\hat{\theta}(g)(v)$ would be zero (since the first component is already known to vanish), thereby contradicting the injectivity of $D\hat{\theta}(g)$. Hence the restriction of $D\hat{\theta}(g)$ to $\mathscr{T}_g\mathscr{M}_{2\hat{N}}(d)$ is injective, therefore an isomorphism onto $\{0\}\times\mathbb{C}^{\hat{N}}$. In view of the local inversion theorem, this proves that $\hat{\theta}_{red}$, which is already known to be a homeomorphism $\mathscr{M}_{2\hat{N}}(d) \to \{1\}\times\mathbb{C}^{\hat{N}}$ (being a restriction of $\hat{\theta}$), is in fact a diffeomorphism.

Finally, characterization (61) follows directly from formula (63), while characterization (62) is obtained upon evaluating (69) at z_1 and equating the result to 1.

Proof. (of Theorem 10) If $m > 0$, then $pp^* + rr^*$ cannot vanish at x_1 since $r(x_1) \neq 0$ by assumption. Thus, the continuity of $\hat{\psi}$ follows from (59) and the continuity of φ_{x_1} (resp. φ_{z_1} if $m = 0$) in Proposition 2. Injectivity is proved like in Proposition 5 upon choosing ξ so that G_j defined by (47) lies in $H^\infty(\mathbb{C}^-)$ for $j = 1,2$, and appealing to property 2 of Theorem 11 (rather than of Theorem 4) with $d = 2rr^*$, $g_j = (q_j + \xi p_j)(q_j + \xi p_j)^*$, $\chi_{g_j} = (q_j + \xi p_j)$ and $\pi_{d,g_j} = (q_j - \xi p_j)$. To secure the choice of ξ, as p_j, q_j are no longer monic, we trade the requirement made in Proposition 5 that $\xi \neq -1$ for the requirement that $\deg(q_j + \xi p_j) = \deg q_j$, which is obviously possible since $\deg q_j \geq \deg p_j$ by (59) and (6). Properness of $\hat{\psi}$ is established as in Proposition 6, noting that now $\deg h_n \leq l - 1$ by construction. Then, reasoning as in Proposition 7 shows that $\hat{\psi}$ is a homeomorphism. Finally, let $\mathbf{P}_{\hat{N}}(r) \subset \mathbf{P}_{\hat{N}}$ be the subset of polynomials having no common real root with r including at infinity, which is easily seen to be open. As in corollary 3 one checks that $\hat{\psi}$ is differentiable on $\mathbf{P}_{\hat{N}}(r)$. To prove that $\hat{\psi}$ restricted to $\mathbf{P}_{\hat{N}}(r)$ is a local diffeomorphism, we write it locally as a composition of local diffeomorphisms, like we did to obtain (57). The arguments, however, are a little different and we detail them below. We consistently denote with q_p (or simply with q if p is understood) the polynomial defined by (59).

As in Theorem 11, let G be the canonical projection from $\mathbb{R}\times\mathbb{C}^{\hat N}$ onto $\mathbb{C}^{\hat N}$. We define

$$\mathbf{P}_{\hat N,x_1}=\{p\in\mathbf{P}_{\hat N},\ p(x_1)=0\},\qquad \big(\text{resp. }\ \mathbf{P}_{\hat N,z_1}=\{p\in\mathbf{P}_{\hat N},\ p(z_1)=0\}\text{ if } m=0\big),$$

and

$$\mathbf{P}_{\hat N,x_1}(r)=\{p\in\mathbf{P}_{\hat N}(r),\ p(x_1)=0\},\qquad \big(\text{resp. }\ \mathbf{P}_{\hat N,z_1}(r)=\{p\in\mathbf{P}_{\hat N}(r),\ p(z_1)=0\}\text{ if } m=0\big).$$

Note that $\mathbf{P}_{\hat N,x_1}$ (resp. $\mathbf{P}_{\hat N,z_1}$) is isomorphic to $\mathbb{R}^{2\hat N}$ and that $\mathbf{P}_{\hat N,x_1}(r)$ (resp. $\mathbf{P}_{\hat N,z_1}(r)$) is an open subset thereof. In a first step, we prove that the map $\hat\psi_{red}\overset{def}{=}G\circ\hat\psi$ defines a homeomorphism from $\mathbf{P}_{\hat N,x_1}$ onto $\{0\}\times\mathbb{D}^{m-1}\times\mathbb{P}^+$ (resp. $\{0\}\times\mathbb{P}^+_{z_2,\cdots,z_{\hat N+1}}$ if $m=0$) and a diffeomorphism onto its image when restricted to $\mathbf{P}_{\hat N,x_1}(r)$ (resp. $\mathbf{P}_{\hat N,z_1}(r)$). In fact, as $q(x_1)>0$ (resp. $q(z_1)>0$ if $m=0$), the relation $p(x_1)=0$ (resp. $p(z_1)=0$) amounts to $(p/q)(x_1)=0$ (resp. $(p/q)(z_1)=0$), and since we know $\hat\psi$ is a homeomorphism $\mathbf{P}_{\hat N}\to\mathbb{D}^m\times\mathbb{P}^+$ it follows from its very definition that it induces by restriction a homeomorphism from $\mathbf{P}_{\hat N,x_1}$ onto $\{0\}\times\mathbb{D}^{m-1}\times\mathbb{P}^+$ (resp. $\{0\}\times\mathbb{P}^+_{z_2,\cdots,z_{\hat N+1}}$). Obviously then, $\hat\psi_{red}$ is a homeomorphism from $\mathbf{P}_{\hat N,x_1}$ onto $\mathbb{D}^{m-1}\times\mathbb{P}^+$ (resp. $\mathbb{P}^+_{z_2,\cdots,z_{\hat N+1}}$).

Next, the differentiability of $\hat\psi_{red}$ on $\mathbf{P}_{\hat N,x_1}(r)$ (resp. $\mathbf{P}_{\hat N,z_1}(r)$) follows from the differentiability of $\hat\psi$ on $\mathbf{P}_{\hat N}(r)$, and it remains to show that $\hat\psi_{red}$ has non-singular differential there.

If $p\in\mathbf{P}_{\hat N,x_1}(r)$ (resp. $\mathbf{P}_{\hat N,z_1}(r)$), then $pp^*+rr^*\in\mathring{\mathbf{PE}}^+_{2\hat N}$ (for p in $\mathbf{P}_{\hat N}(r)$ has no common root with r including at infinity), hence q belongs to $\mathbf{SE}_{\hat N}$ and is a smooth function of p by Proposition 2. In a neighborhood V of $p_0\in\mathbf{P}_{\hat N,x_1}(r)$ (resp. $\mathbf{P}_{\hat N,z_1}(r)$), define $\hat\eta(p)=\xi p+q$ where $\xi\in\mathbb{C}$ is such that $|\xi|=1$ and $\xi p_0+q_{p_0}\in\mathbf{SE}_{\hat N}$. That ξ exists can be shown as in the beginning of the proof of Proposition 8, replacing the condition $\xi\neq-1$ by $\xi p_0[\hat N]\neq -q_{p_0}[\hat N]$ which is clearly an open condition by the continuity of $p\mapsto q_p$ (here, the symbol $[\hat N]$ means that we select the coefficient of degree $\hat N$). Shrinking V is necessary, we may assume that $\xi p+q_p\in\mathbf{SE}_{\hat N}$ for all $p\in V$. If $dp\in\mathbf{P}_{\hat N,x_1}$ (resp. $\mathbf{P}_{\hat N,z_1}$) lies in the kernel of the derivative $D\hat\eta(p)$, then (55) holds. As $(\xi p+q)^*$ is coprime to $\xi p+q$ by stability of the latter, and since $\deg dp\le\hat N=\deg(\xi p+q)$, it follows that $dp=\lambda(\xi p+q)$ for some $\lambda\in\mathbb{C}$. Evaluating at x_1 (resp. z_1) yields $\lambda=0$ for $q_p(x_1)>0$ (resp. $q_p(z_1)>0$). The derivative $D\hat\eta(p):\mathbf{P}_{\hat N,x_1}\to\mathbf{P}_{\hat N}$ is therefore injective at p_0 and so, for sufficiently small V, the map $\hat\eta$ is a diffeormorphism from V onto a smooth embedded submanifold $\hat\eta(V)\subset\mathbf{SE}_{\hat N}$ of dimension $2\hat N$ [37, Ch. 1, Cor. (f)]. Note that, by construction, $\hat\eta(V)\subset\{P\in\mathbf{SE}_{\hat N},\ P(x_1)>0\}$ (resp. $\{P\in\mathbf{SE}_{\hat N},\ P(z_1)>0\}$).

Consider now the map $\hat{\mathfrak{m}}:\hat\eta(V)\to\mathring{\mathbf{PE}}^+_{2\hat N}$ given by $\hat{\mathfrak{m}}(v)=vv^*$. Clearly $\hat{\mathfrak{m}}$ is the restriction to $\hat\eta(V)$ of $\varphi_{x_1}^{-1}$ (resp. $\varphi_{z_1}^{-1}$), and we get from Proposition 2 that it is a diffeomorphism onto an embedded submanifold $W\subset\mathring{\mathbf{PE}}^+_{2\hat N}$ of dimension $2\hat N$. By construction, the elements of W can uniquely be written as $(\xi p+q_p)(\overline{\xi}p^*+q_p^*)$ with $p\in V\subset\mathbf{P}_{\hat N,x_1}(r)$. Thus, the elementary computation

$$(q-\xi p)(\xi p+q)^*+(q-\xi p)^*(\xi p+q)=2rr^*$$

together with the fact that $(\xi p+q)(x_1)=q(x_1)>0$ (resp. $(\xi p+q)(z_1)=q(z_1)>0$) and the relation

$$\frac{q-\xi p}{q+\xi p}(x_1)=1\qquad\left(\text{resp. }\frac{q-\xi p}{q+\xi p}(z_1)=1\right)$$

allow us for an application of Theorem 11 with $d=2rr^*$ and $g=(\xi p+q_p)(\overline{\xi}p^*+q_p^*)=\hat{\mathfrak{m}}\circ\hat\eta(p)$. In the notation of that theorem we have that $\pi_{d,g}=q-\xi p$ and $\chi_g=q+\xi p$, hence $Y_{d,g}=(q-\xi p)/(q+\xi p)$. In particular, we deduce from point 4 that $\hat{\mathfrak{m}}\circ\hat\eta(V)\subset\mathscr{M}_{2\hat N}(d)$. Moreover, letting $\hat\tau:(\mathbb{C}^+)^{\hat N}\to\mathbb{D}^{\hat N}$ act componentwise as $z\mapsto(1-z)/(1+z)$, we easily check that

$$\hat\psi_{red}=\frac{1}{\xi}\hat\tau\circ\hat\theta_{red}\circ\hat{\mathfrak{m}}\circ\hat\eta$$

where $\hat{\theta}_{red}$ is the diffeomorphism from $\mathscr{M}_{2\hat{N}}(d)$ into $\mathbb{C}^{\hat{N}}$ introduced in Theorem 11 point 4. This indicates that $\hat{\psi}_{red}$ admits a local representation as a composition of diffeomorphisms on the neighborhood V of p_0. Since the latter was arbitrary in $\mathbf{P}_{\hat{N},x_1}$ (resp. $\mathbf{P}_{\hat{N},z_1}$) and $\hat{\psi}_{red}$ is already known to be a homeomorphism, it follows that it is a diffeomorphism from $\mathbf{P}_{\hat{N},x_1}(r)$ (resp. $\mathbf{P}_{\hat{N},z_1}(r)$) onto its image in in $\mathbb{C}^{\hat{N}}$. This completes the first step.

In a second step, we pass from $\hat{\psi}_{red}$ to $\hat{\psi}$. For this, observe that for any $\alpha \in \mathbb{D}$

$$\begin{aligned}(q-\overline{\alpha}p)(q-\overline{\alpha}p)^* - (\alpha q-p)(\alpha q-p)^* &= (1-|\alpha|^2)(qq^*-pp^*)\\ &= (1-|\alpha|^2)rr^*,\end{aligned} \tag{75}$$

and that

$$\frac{\alpha q-p}{q-\overline{\alpha}p} = \frac{\alpha-\frac{p}{q}}{1-\overline{\alpha}\frac{p}{q}} = M_\alpha(p/q) \tag{76}$$

where $M_\alpha(z) \stackrel{def}{=} (\alpha-z)/1-\bar{\alpha}z)$ is the familiar automorphism of the unit disk swaping 0 and α. Together, (75) and (76) imply that if (p,q) is the pair of polynomials solving for problem $\hat{\mathscr{P}}$ with interpolation values $(0,\gamma_2,\dots\gamma_m,\beta_1\dots\beta_l)$ (resp. $(0,\beta_2\dots\beta_{\hat{N}+1})$ if $m=0$), then $\frac{1}{\sqrt{1-|\alpha|^2}}(\alpha q-p, q-\overline{\alpha}p)$ is the pair of polynomials solving for $\hat{\mathscr{P}}$ with interpolation values

$$\left(\alpha, \frac{\alpha-\gamma_2}{1-\overline{\alpha}\gamma_2}\cdots\frac{\alpha-\gamma_m}{1-\overline{\alpha}\gamma_m}, \frac{\alpha-\beta_1}{1-\overline{\alpha}\beta_1},\dots,\frac{\alpha-\beta_l}{1-\overline{\alpha}\beta_l}\right) \qquad \left(resp.\left(\alpha, \frac{\alpha-\beta_2}{1-\overline{\alpha}\beta_2},\dots,\frac{\alpha-\beta_{\hat{N}+1}}{1-\overline{\alpha}\beta_{\hat{N}+1}}\right)\right), \tag{77}$$

where it should be observed that if $(\beta_1,\cdots,\beta_l)\in\mathbb{P}^+$ then $(M_\alpha(\beta_1),\cdots,M_\alpha(\beta_l))\in\mathbb{P}^+$ also, because if f is a Schur function on $\mathbb{C}^-$ which is strictly less than 1 in modulus on a subset of $\mathbb{R}$ of positive measure, then so is $M_\alpha(f)$. Thus, if we let $\hat{\mathfrak{f}}_\alpha : \mathbb{D}^{\hat{N}} \to \mathbb{D}^{\hat{N}}$ act componentwise as M_α, we find since the latter is involutive that

$$\hat{\psi}(p) = \begin{pmatrix} \frac{p}{q}(x_1) \\ \hat{\mathfrak{f}}_{\frac{p}{q}(x_1)} \circ \hat{\psi}_{red}\left(\frac{1}{\sqrt{1-|\frac{p}{q}(x_1)|^2}}(\frac{p}{q}(x_1)q-p)\right)\end{pmatrix} \qquad \forall p\in\mathbf{P}_{\hat{N}} \quad \text{if } m>0, \tag{78}$$

$$\hat{\psi}(p) = \begin{pmatrix} \frac{p}{q}(z_1) \\ \hat{\mathfrak{f}}_{\frac{p}{q}(z_1)} \circ \hat{\psi}_{red}\left(\frac{1}{\sqrt{1-|\frac{p}{q}(z_1)|^2}}(\frac{p}{q}(z_1)q-p)\right)\end{pmatrix} \qquad \forall p\in\mathbf{P}_{\hat{N}} \quad \text{if } m=0. \tag{79}$$

This completes the second step.

Finally, we make use of the previous two steps to compute $\hat{\psi}^{-1}$ and show that it is differentiable at $\psi(p)$ when $p\in\mathbf{P}_{\hat{N}}(r)$. This will achieve the proof. We give the argument when $m>0$ only, as the case $m=0$ is entirely similar, replacing formally φ_{x_1} by φ_{z_1} and $\mathbf{P}_{\hat{N},x_1}$ by $\mathbf{P}_{\hat{N},z_1}$.

Define $\kappa : \mathbb{D}^m\times\mathbb{P}^+ \to \mathbf{P}_{\hat{N},x_1}$ by

$$\kappa(y) = \hat{\psi}_{red}^{-1}\circ\hat{\mathfrak{f}}_{y_1}(G(y)), \qquad y=(y_1,\dots,y_{\hat{N}+1})^t\in\mathbb{D}^m\times\mathbb{P}^+. \tag{80}$$

Note that $(\kappa(y), q_{\kappa(y)})$ is the solution to $\hat{\mathscr{P}}$ with interpolation values $(0,\hat{\mathfrak{f}}_{y_1}(y_2\dots y_{\hat{N}+1})^T)$. Therefore, it is readily checked from (77) that the inverse of $\hat{\psi} : \mathbf{P}_{\hat{N}} \to \mathbb{D}^m\times\mathbb{P}^+$ is given by

$$\hat{\psi}^{-1}(y) = \frac{1}{\sqrt{1-|y_1|^2}}(y_1\varphi_{x_1}(\kappa(y)\kappa(y)^*+rr^*)-\kappa(y)), \qquad y=(y_1,\dots,y_{\hat{N}+1})^t\in\mathbb{D}^m\times\mathbb{P}^+. \tag{81}$$

To prove that $\hat{\psi}^{-1}$ is differentiable at every $y \in \hat{\psi}(\mathbf{P}_{\hat{N}}(r))$, observe from (75) that p has no real common root with r if, and only if $\alpha q - p$ does. Applying this with $\alpha = (p/q)(x_1)$, we deduce from (78) that $y \to \hat{\mathfrak{f}}_{y_1} \circ G(y)$ maps $\hat{\psi}(\mathbf{P}_{\hat{N}}(r))$ into $\hat{\psi}_{red}(\mathbf{P}_{\hat{N},x_1}(r))$. The kth component of this map is:

$$\frac{y_1 - y_{k+1}}{1 - \overline{y_1} y_{k+1}}, \tag{82}$$

which is differentiable with respect to the components of y as the denominator of (82) is locally bounded away from zero. The differentiability of $\hat{\psi}_{red}^{-1}$ on $\hat{\psi}_{red}(\mathbf{P}_{\hat{N},x_1}(r))$ is then to the effect that κ is differentiable on $\psi(\mathbf{P}_{\hat{N}}(r))$. The differentiability of φ_{x_1} and formula (81) then yield that $\hat{\psi}^{-1}$ is differentiable at each $y \in \hat{\psi}(\mathbf{P}_{\hat{N}}(r))$, as desired. ∎

To conclude this section, let us point out an interesting relation between problems $\mathscr{P}$ and $\hat{\mathscr{P}}$. In the statement below, we write ψ_r and $\hat{\psi}_r$ to emphasize the dependency of ψ and $\hat{\psi}$ with respect to the polynomial r.

PROPOSITION 12. *Suppose that $y \in \mathbb{D}^m \times \mathbb{P}^+$ and that (α_k) is a sequence of real numbers tending to $+\infty$. Let $p_k = \psi_{\alpha_k r}^{-1}(y)$ and put $e^{i\beta_k}$ for the leading term of $\varphi_{x_1}(\alpha_k^2 rr^* + p_k p_k^*)$ (resp. $\varphi_{z_1}(\alpha_k^2 rr^* + p_k p_k^*)$ if $m = 0$), noting that $\beta_k \in \mathbb{R}$ (because $\deg r < m + l$ while $p_k \in \mathbf{PM}_{m+l}$). Then, it holds that*

$$\lim_{k\to\infty} e^{i\beta_k} \frac{p_k}{\alpha_k} = \hat{\psi}_r^{-1}(y).$$

Proof. Set $q_k = \varphi_N(\alpha_k^2 rr^* + p_k p_k^*)$ and note that $e^{i\beta_k} q_k = \varphi_{x_1}(\alpha_k^2 rr^* + p_k p_k^*)$ (resp. $varphi_{x_1}(\alpha_k^2 rr^* + p_k p_k^*)$ if $m = 0$). The polynomials (p_k/α_k) verify the Feldtkeller equation:

$$\frac{p_k p_k^*}{\alpha_k^2} + rr^* = \frac{q_k q_k^*}{\alpha_k^2},$$

and argueing as in Proposition 6 we see that (p_k/α_k) is bounded independently of k, for otherwise y would lie on the boundary of $\mathbb{D}^m \times \mathbb{P}^+$. Thus, we can extract from any subsequence $(e^{i\beta_{k_n}} \frac{p_{k_n}}{\alpha_{k_n}})$ and $(e^{i\beta_{k_n}} \frac{q_{k_n}}{\alpha_{k_n}})$ a subsequence that converges to some polynomials p and q. Of necessity, p and q have degree strictly less than N because p_{k_n} and q_{k_n} are monic. By continuity we get that p/q verifies (11) with $y = (\gamma_1, \ldots, \gamma_m, \beta_1, \ldots, \beta_l)^T$, and that $q = \varphi_{x_1}(rr^* + pp^*)$ (resp. $\varphi_{z_1}(rr^* + pp^*)$) which indicates that (p, q) is the solution of $\hat{\mathscr{P}}$. ∎

5. Numerical experiments. In order to invert the maps ψ and $\hat{\psi}$, a continuation method has been implemented as follows. Suppose we want to compute ψ^{-1} (resp.$\hat{\psi}^{-1}$) at $\nu_1 \in \mathbb{D}^m \times \mathbb{P}_Z^+$. We pick an aritrary $p_0 \in \mathbf{PM}_N$ devoid of common real zero with r, and we compute $\nu_0 = \psi(p_0)$ (resp. $\nu_0 = \hat{\psi}(p_0)$). Then, we select γ to be a smooth path in $\mathbb{D}^m \times \mathbb{P}_Z^+$ joining ν_0 to ν_1. Now, using a classical predictor-corrector method, we lift γ to the path $\lambda = \psi^{-1}(\gamma)$ by numerically integrating the differential equation:

$$\frac{d\lambda}{dt} = D\psi^{-1}(\gamma(t)) \left[\frac{d\gamma}{dt}\right] \tag{83}$$

with initial condition $\lambda(0) = p_0$. Note that $D\psi$, thus also $D\psi^{-1}$ is easily computed from Proposition 2, and that Proposition 9 ensures the integration process will run smoothly along γ at the cost of jiggling the latter slightly if near-singular places are met.

Below we consider the case of an antenna functioning around 2.4 Ghz. The red curve on Figure 2 represents the reflexion coefficient $L_{1,1}$ of the antenna. The latter was designed to match well a load of 50Ω at the frquency $2.454Ghz$, whith a value of $-23.54dB$. *Our objective here is to improve this match on the whole frequency pass-band $I = [2.2, 2.5]$ Ghz, while requiring strong rejection outside of this band.*

For this we solve Problem $\hat{\mathscr{P}}$ in degree 5, choosing r to have two transmission zeros at $2.17Ghz$ and $2.53Ghz$ respectively. The interpolation points are initially placed as Tchebychev nodes on the frequency interval I (*i.e.* the roots of the Tchebychev polynomial of the first kind with degree 5 on I). Then, we iteratively adjust the interpolation points by feeding the whole process to a blackbox optimizer from *Matlab* so as to minimize the maximum of the reflexion level (see equation 2):

$$|G_{1,1}(w)| = \left| \frac{p/q - \overline{L}_{1,1}}{1 - p/q\overline{L}_{1,1}} \right| \tag{84}$$

over the segment I. The obtained reflexion level $G_{1,1}$ is presented on Figure 2, showing a clear improvement with respect to the initial reflexion level of $L_{1,1}$, while exhibiting strong selectivity at the ends of the pass-band. The whole procedure takes less than $3sec$ on a pc equipped with *PentiumI*7 procedure, which makes it perfectly suited to design matching circuit responses. If needed, these can be further adjusted using dedicated local optimization procedures.

REFERENCES

[1] M. Abrahamse, *The pick interpolation theorem for finitely connected domains*, Michigan Math. J., 26 (1979), pp. 195–203.

[2] J. Agler and J. E. McCarthy, *Nevanlinna-Pick interpolation on the bidisk*, J. reine angew. Math., 506 (1999), pp. 191–124.

[3] J. Agler and N. J. Young, *Boundary nevanlinna-pick interpolation via reduction and augmentation*, Mathematische Zeitschrift, 268 (2011), pp. 791–817.

[4] A. Arias and G. Popescu, *Noncommutative interpolation and poisson transforms*, Israel J. Math., 115 (2000), pp. 205–234.

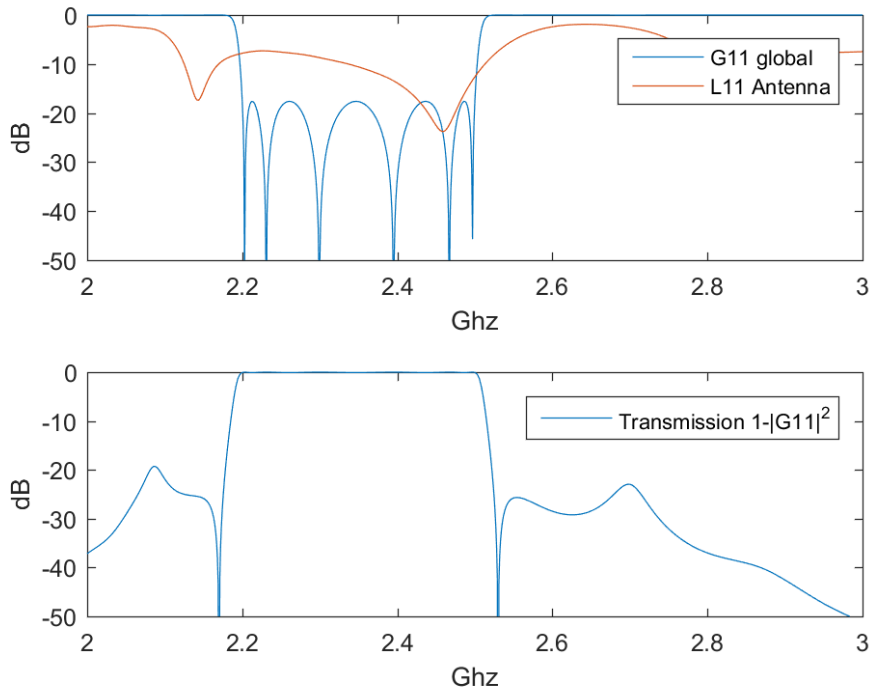

FIG. 2. *Antenna reflexion $L_{1,1}$ and global reflexion $G_{1,1}$*

[5] A. Ball, Joseph and T. Horst, Sanna, *Robust Control, Multidimensional Systems and Multivariable Nevanlinna-Pick Interpolation*, vol. 203 of Operator Theory: Advances and Applications, Birkhaüser, 2010, ch. 2, pp. 13–88.

[6] J. Ball, I. Gohberg, and L. Rodman, *Interpolation of rational matrix functions*, vol. 45 of Operator Theory: Advances and Applications, Birkhäuser, 1990.

[7] J. A. Ball and V. Bolotnikov, *Nevanlinna-Pick interpolation for Schur-Agler class functions on domains with matrix polynomial defining function*, New York J. Math., 11 (2005).

[8] J. A. Ball and V. Bolotnikov, *Interpolation in the noncommutative Schur-Agler class*, J. Operator Theory, 58 (2007), pp. 83–126.

[9] L. Baratchart, S. Chevillard, and T. Qian, *Minimax principle and lower bounds in h^2-rational approximation*, Journal of Approximation Theory, (2015). DOI: 10.1016/j.jat.2015.03.004.

[10] L. Baratchart and M. Olivi, *Critical points and error rank in best H^2 matrix rational approximation*, Constructive Approximation, 14 (1998), pp. 273–300.

[11] L. Baratchart, M. Olivi, and F. Seyfert, *Generalized Nevanlinna-Pick interpolation on the boundary. Application to impedance matching*, in Proceedings of the MTNS (Groninguen, Netherlands), 2014.

[12] V. Belevitch, *Elementary applications of scattering formalism to network design*, IRE Trans. Circuit Theory, (1956).

[13] V. Belevitch, *Classical Network Theory*, Holden-Day, 1968.

[14] C. Byrnes, T. Georgiou, and A. Lindquist, *A generalized entropy criterion for Nevanlinna-Pick interpolation with degree constraint*, IEEE trans. on Autom. Control, 46 (2001), pp. 822–839.

[15] C. Byrnes, T. T. Georgiou, A. Lindquist, and A. Megretski, *Generalized interpolation in h^∞ with a complexity constraint*, Trans. Amer. Math. Soc., 358 (2006), pp. 965–988.

[16] H. Carlin and P. Civalleri, *Wideband Circuit Design*, CRC Press, 1997.

[17] K. R. Davidson and D. R. Pitts, *Nevanlinna-Pick interpolation for noncommutative analytic Toeplitz algebras*, Integral Equations and Operator Theory, 31 (1998), pp. 321–337.

[18] H. Dym, *J-contractive matrix functions, reproducing kernel spaces and interpolation*, vol. 71 of CBMS lecture notes, American Mathematical Society, Rhode Island, 1989.

[19] B. A. Francis, J. Helton, and G. Zames, *h^∞-optimal feedback controllers for linear multivariable systems*, IEEE Trans. Automat. Control, 29 (1984), pp. 888–900.

[20] P. Fuhrmann, *Linear systems and operators in Hilbert spaces*, Mc Graw Hill, 1981.

[21] J. Garnett, *Bounded Analytic Functions*, Academic Press, 1981.

[22] T. Georgiou, *A topological approach to Nevanlinna-Pick interpolation*, SIAM J. MATH ANAL., 18(5) (1987), pp. 1248–1260.

[23] T. Georgiou, *The interpolation problem with a degree constraint*, IEEE Trans. Automat. Contro, (1999).

[24] V. Guillemin and A. Pollack, *Differential Topology*, Prentice-Hall, 1974.

[25] J. Helton, *Broadbanding:gain equalization directly from data*, Circuits and Systems, IEEE Transactions on, 28 (1981), pp. 1125–1137, http://dx.doi.org/10.1109/TCS.1981.1084944.

[26] T. T. G. J. Karlsson and A. G. Lindquist, *The inverse problem of analytic interpolation with degree constraint and weight selection for control synthesis*, IEEE Trans on automatic control, 55 (2010), pp. 405–418.

[27] R. Kalman, P. Falb, and A. Arbib, *Topics in Mathematical System Theory*, McGraw-Hill, New-York, 1969.

[28] P. Khargonekar and A. Tannenbaum, *Noneuclidean metrics and the robust stabilization of systems with parameter uncertainty*, IEEE Trans. Automat. Control, 30 (1985), pp. 1005–1013.

[29] H. Kimura, *Directional interpolation approach to h^∞-optimization and robust stabilization*, IEEE Trans. Automat. Control, 32 (1987), pp. 1095–1093.

[30] H. Kimura, *Conjugation, interpolation and model-matching in h^∞*, Int. J. Control, 49 (1989), pp. 269–307.

[31] D. J. N. Limebeer and B. D. O. Anderson, *An interpolation theory approach to h^∞ controller degree bounds*, Linear Algebra Appl., (1988), pp. 347–386.

[32] J. Munkres, *Elements of algebraic topology*, Addison-Wesley, 1930.

[33] Y. G. P.H. Delsarte and Y. Kamp, *On the role of the nevanlinna-pick problem in circuit and system theory*, ircuit Theory and Appl., 9 (1981), pp. 177–187.

[34] F. Riesz and B. Szőkefalvi-Nagy, *Functional Analysis*, Dover, 1990.

[35] D. Sarason, *Nevanlinna–Pick interpolation with boundary data*, Integral Equations Operator Theory, 30 (1998), pp. 231–250.

[36] Tannenbaum, *Feedback stabilization of linear dynamical plants with uncertainty in the gain factor*, Int. Journal Control, 32 (1980), pp. 1–16.

[37] F. W. Warner, *Foundations of Differential Manifolds and Lie Groups*, vol. 94 of Graduate Texts in Mathematics, Springer, 1983.

[38] H. Yong-Jian, K. d. A. Boubakar, and C. Gong-Ning, *On boundary Nevanlinna–Pick interpolation for carathéodory matrix functions*, Linear Algebra and its Applications, 423 (2007), pp. 209–229.

[39] D. C. Youla and M. Saito, *Interpolation with positive real functions*, J. Franklin Institute, (1967).

[40] O. Zames and B. A. Francis, *Feedback, minimax sensitivity, and optimal robustness*, IEEE Trans. Automatic Control, 28 (1983), pp. 585–600.

Notations. The main notations used in this paper are listed below.

$\mathbb{C}$	field of complex number
$\mathbb{C}^+$	open upper half-plane
$\mathbb{C}^-$	open lower half-plane
$\mathbb{T}$	unit circle
$\mathbb{D}$	open unit disk
$P(Z,\beta)$	Pick matrix associated with the sequence of interpolation data (z_k,β_k)
$\mathbb{P}_Z^+$	the set of interpolation values $\beta \in \mathbb{C}^l$ such that $P(Z,\beta) > 0$
$\mathbf{P}_N$	complex polynomials of degree at most N
$\mathbf{PE}_N$	complex polynomials of exact degree N
$\mathbf{PM}_N$	monic complex polynomials of degree N
$\mathbf{P}_{2N}^+$	non negative real polynomials of degree at most $2N$
$\mathbf{PE}_{2N}^+$	non negative real polynomials of exact degree $2N$
$\mathbf{PM}_{2N}^+$	non negative real monic polynomials of degree $2N$
$\mathbf{S}_N$	stable (no roots in $\overline{\mathbb{C}^-}$) complex polynomials of degree at most N
$\mathbf{SE}_N$	stable complex polynomials of exact degree N
$\mathbf{SM}_N$	stable monic complex polynomials of degree N
$\mathbf{SB}_N$	polynomials of degree at most N stable in the broad sense
$\mathbf{SBM}_N$	monic polynomials of degree N stable in the broad sense
$\mathbf{PM}_N(r)$	the subset of $\mathbf{PM}_N$ of polynomials having no common root with r
$\mathbf{P}_{\hat{N},x_1}$	the set of polynomials $p \in \mathbf{P}_{\hat{N}}$ vanishing at x_1
$\mathbf{P}_{\hat{N},x_1}(r)$	the set of polynomials $p \in \mathbf{P}_{\hat{N}}$ vanishing at x_1, having no common root with r
$H^\infty(\mathbb{C}^-)$	the space of bounded holomorphic functions in the lower half-plane
$H^2(\mathbb{C}^-)$	the Hardy space of exponent 2 of the lower half-plane
$L^2(\mathbb{R})$	the space of square integrable functions on the real line
$F^*(s) = F(\bar{s})^*$	the para-Hermitian conjugate of a rational matrix function $F(s)$
$\mathring{V}$	denotes the interior of a set V in a topological space