HAL open science

Computation of Value Functions in Nonlinear Differential Games with State Constraints

Nikolai Botkin, Karl-Heinz Hoffmann, Natalie Mayer, Varvara Turova

To cite this version:

Nikolai Botkin, Karl-Heinz Hoffmann, Natalie Mayer, Varvara Turova. Computation of Value Functions in Nonlinear Differential Games with State Constraints. 25th System Modeling and Optimization (CSMO), Sep 2011, Berlin, Germany. pp.235-244, 10.1007/978-3-642-36062-6_24 . hal-01347543

HAL Id: hal-01347543

https://inria.hal.science/hal-01347543v1

Submitted on 21 Jul 2016

HAL is a multi-disciplinary open access archive for the deposit and dissemination of scientific research documents, whether they are published or not. The documents may come from teaching and research institutions in France or abroad, or from public or private research centers.

L'archive ouverte pluridisciplinaire **HAL**, est destinée au dépôt et à la diffusion de documents scientifiques de niveau recherche, publiés ou non, émanant des établissements d'enseignement et de recherche français ou étrangers, des laboratoires publics ou privés.

Distributed under a Creative Commons Attribution 4.0 International License

Computation of Value Functions in Nonlinear Differential Games with State Constraints

Nikolai Botkin, Karl-Heinz Hoffmann, Natalie Mayer, and Varvara Turova*

Technische Universität München, Center for Mathematics,
Boltzmannstr. 3, 85716 Garching, Germany
{botkin,hoffmann,turova}@ma.tum.de
mayer@lcc.mw.tum.de

Abstract. Finite-difference schemes for the computation of value functions of nonlinear differential games with non-terminal payoff functional and state constraints are proposed. The solution method is based on the fact that the value function is a generalized viscosity solution of the corresponding Hamilton-Jacobi-Bellman-Isaacs equation. Such a viscosity solution is defined as a function satisfying differential inequalities introduced by M. G. Crandall and P. L. Lions. The difference with the classical case is that these inequalities hold on an unknown in advance subset of the state space. The convergence rate of the numerical schemes is given. Numerical solution to a non-trivial three-dimensional example is presented.

Keywords: Differential games, non-terminal payoff functionals, state constraints, value functions, viscosity solutions, finite-difference schemes

1 Introduction

Numerical methods for solving differential games (see [1–3] for concepts) are intensively developed during two or three last decades. We consider control systems with nonlinear dynamics, non-terminal payoff functionals, and state constraints. Our approach is based on the approximation of viscosity solutions of the Hamilton-Jacobi-Bellman-Isaacs equation associated with the considered differential game.

In [4], a pair of differential inequalities determining the value function of nonlinear differential games with non-terminal payoff functionals was introduced. Additionally, the directional differentiability of the value function was required. In [5], such a requirement was relaxed, and the results were stated in terms of upper and lower directional derivatives. At the same time, the concept of viscosity solutions for Hamilton-Jacobi equations was proposed in [6] and [7]. Further investigations [8] showed that the inequalities for the upper and lower directional derivatives are equivalent to the inequalities defining viscosity solutions.

* Corresponding author.

Grid methods based on vanishing viscosity techniques for finding viscosity solutions of Hamilton-Jacobi equations were suggested in [9]. In [10], an abstract operator that generates approximate solutions was introduced, and the uniform convergence of approximate solutions to a viscosity solution was proved. A representation of this operator in terms of differential game theory was given in [11]. The results of [10] and [11] cover differential games with the payoff functional

$$\gamma_1(x(\cdot)) = \chi(T, x(T)). \tag{1}$$

In [12], the approach of [10] and [11] was extended to differential games with more general (non-terminal) payoff functionals of the form

$$\gamma_2(x(\cdot)) = \min_{t\in[t_0,T]} \chi(t, x(t)), \tag{2}$$

where t_0 is the starting time, T the termination time, $x(\cdot)$ a trajectory of the controlled system, and χ a given function.

In the present paper, differential games with payoff functionals of the form

$$\gamma_3(x(\cdot)) = \max\{\min_{t\in[t_0,T]} \chi(t, x(t)), \max_{t\in[t_0,T]} \theta(t, x(t))\}, \tag{3}$$

where χ and θ are given functions, satisfying the relation $\chi(t, x) \geq \theta(t, x)$ for all t and x, are considered. As it will be seen later, the first part of functional (3), $\min_{t\in[t_0,T]} \chi(t, x)$, is responsible for the quality of the process, and the second part, $\max_{t\in[t_0,T]} \theta(t, x(t))$, accounts for state constraints. In the following, differential inequalities defining viscosity solutions in the case of payoff functional (3) will be formulated and compared with those related to payoff functionals (2) and (1). A finite difference scheme based on a modified abstract operator that generates approximations of viscosity solutions is presented, and an example of computation of value function for a three-dimensional problem originated from the famous isotropic rocket game introduced in [1] is given.

2 Statement of the Problem

Consider a collision-avoidance differential game with the dynamics

$$\dot{x} = f(t, x, \alpha, \beta), \quad t \in [0, T], \quad x \in \mathbb{R}^n, \quad \alpha \in A \subset \mathbb{R}^\mu, \quad \beta \in B \subset \mathbb{R}^\nu, \tag{4}$$

where t is time; $x = (x_1, ..., x_n)$ the state vector ; α, β are control parameters of the players; and A, B are given compacts. The game starts at $t = t_0$ and finishes at $t = T$. The first player, control parameter α, strives to bring the trajectories of system (4) to a target set given by

$$M := \{(t, x) : t \in [0, T], \chi(t, x) \leq 1\}$$

within the time $[t_0, T]$. The objective of the second player, control parameter β, is opposite. Besides, the trajectories should remain in a state constraint set given by

$$N := \{(t, x) : t \in [0, T], \theta(t, x) \leq 1\}.$$

Here, $\chi : [0,T] \times \mathbb{R}^n \to \mathbb{R}$ and $\theta : [0,T] \times \mathbb{R}^n \to \mathbb{R}$ are some given functions such that $\chi(t,x) \geq \theta(t,x)$ for all t and x so that $M \subset N$ holds.

We extend this differential game by considering the payoff functional (3) being minimized by the first player and maximized by the second one. It is easily seen that the value function of such an extended problem gives a solution to the collision-avoidance differential game. In fact, if the value function of the differential game (4) and (3) is less than or equal to 1 at the starting position of the extended game, then there exists a strategy of the first player such that, for all strategies of the second player and all trajectories $x(\cdot)$, two conditions hold:

(a) $\min_{t\in[t_0,T]} \chi(t,x(t)) \leq 1$ (the position $(t,x(t))$ arrives at the target set M at some time instant $t \leq T$),

(b) $\max_{t\in[t_0,T]} \theta(t,x(t)) \leq 1$ (the position $(t,x(t))$ remains in the state constraint set N for all $t \in [t_0,T]$).

Let the extended game is formalized as in [2–4]. That is, the players use feedback strategies which are arbitrary functions

$$\mathcal{A} : [0,T] \times \mathbb{R}^n \to A, \quad \mathcal{B} : [0,T] \times \mathbb{R}^n \to B.$$

For any initial position $(t_0,x_0) \in [0,T] \times \mathbb{R}^n$ and any strategies $\mathcal{A}$ and $\mathcal{B}$, two functional sets $X_1(t_0,x_0,\mathcal{A})$ and $X_2(t_0,x_0,\mathcal{B})$ are defined. These sets consist of the limits of the step-by-step solutions of (4) generated by the strategies $\mathcal{A}$ and $\mathcal{B}$, respectively (see [2–4]).

We assume that the function f is uniformly continuous, bounded and Lipschitzian in t and x on $[0,T] \times \mathbb{R}^n \times A \times B$; the functions χ and θ are bounded and Lipschitzian in t,x; and the following saddle point condition holds:

$$H(t,x,p) := \max_{\beta\in B} \min_{\alpha\in A} \langle p, f(t,x,\alpha,\beta)\rangle = \min_{\alpha\in A} \max_{\beta\in B} \langle p, f(t,x,\alpha,\beta)\rangle$$

for any $p \in \mathbb{R}^n$, $(t,x) \in [0,T] \times \mathbb{R}^n$.

It is proved in [4, 13] that the differential game (4)–(3) has a value function $c : (t,x) \to c(t,x)$ defined by the relation

$$c(t,x) = \min_{\mathcal{A}} \max_{\substack{x(\cdot)\in \\ X_1(t,x,\mathcal{A})}} \gamma_3(x(\cdot)) = \max_{\mathcal{B}} \min_{\substack{x(\cdot)\in \\ X_2(t,x,\mathcal{B})}} \gamma_3(x(\cdot)).$$

Thus, the upper value of the game coincides with the lower one for all $(t,x) \in [0,T] \times \mathbb{R}^n$. The value function is bounded and Lipschitzian in t,x on $[0,T] \times \mathbb{R}^n$.

3 Viscosity Solutions

We formulate differential inequalities defining the value function of the differential game (3,4) and compare them with corresponding differential inequalities for the value functions of differential games (2,4) and (1,4).

Proposition 1. *A Lipschitz function c is the value function of differential game (3) and (4) if and only if:*

(i) for any $(t,x) \in [0,T] \times \mathbb{R}^n$, $\quad c(T,x) = \chi(T,x)$ and $\theta(t,x) \le c(t,x) \le \chi(t,x)$;

(ii) for any point $(s_0, y_0) \in [0,T] \times \mathbb{R}^n$ such that $c(s_0,y_0) \le \chi(s_0,y_0)$ and any function $\varphi \in \mathbb{C}^1$ such that $c-\varphi$ attains a local minimum at (s_0,y_0), the following inequality holds

$$\frac{\partial \varphi}{\partial t}(s_0,y_0) + H(s_0,y_0,\frac{\partial \varphi}{\partial y}(s_0,y_0)) \le 0; \tag{5}$$

(iii) for any point $(s_0, y_0) \in [0,T] \times \mathbb{R}^n$ such that $c(s_0,y_0) \ge \theta(s_0,y_0)$ and any function $\varphi \in \mathbb{C}^1$ such that $c-\varphi$ attains a local maximum at (s_0,y_0), the following inequality holds

$$\frac{\partial \varphi}{\partial t}(s_0,y_0) + H(s_0,y_0,\frac{\partial \varphi}{\partial y}(s_0,y_0)) \ge 0. \tag{6}$$

The proof of Proposition 1 is given in [14].

Remark 1. If the relation $\theta(t,x) \le c(t,x)$ in (i) and the condition $c(s_0,y_0) \ge \theta(s_0,y_0)$ in (iii) are omitted, relations (i)-(iii) define the value function of differential game (2,4) (see [12]). If, additionally, the relation $c(t,x) \le \chi(t,x)$ in (i) and the condition $c(s_0,y_0) \le \chi(s_0,y_0)$ in (ii) are omitted, relations (i)-(iii) define the value function of differential game (1,4).

Remark 2. We call a Lipschitz function c satisfying relations (i)-(iii) of Proposition 1 a generalized viscosity solution of the Hamilton-Jacobi equation

$$c_t + H(t,x,c_x) = 0.$$

Thus, a generalized solution exists and is unique.

4 Finite-Difference Schemes

In this section, an upwind operator (see [15] for the idea) is introduced, and finite-difference schemes based on this operator are described.

Let $\rho, h_1, ..., h_n$ be time and space discretization step sizes. The upwind operator F is defined as follows:

$$F(c;t,\rho,h_1,...,h_n)(x) = c(x) + \rho \max_{\beta \in B} \min_{\alpha \in A} \sum_{i=1}^{n} (p_i^R f_i^+ + p_i^L f_i^-),$$

where $f_i = f_i(t,x,\alpha,\beta)$ are the right hand sides of the control system, and

$$a^+ = \max\{a,0\}, \quad a^- = \min\{a,0\},$$

$$p_i^R = [c(x_1,...,x_i+h_i,...,x_n) - c(x_1,...,x_i,...,x_n)]/h_i,$$

$$p_i^L = [c(x_1,...,x_i,...,x_n) - c(x_1,...,x_i-h_i,...,x_n)]/h_i.$$

Remark 3. Note that, if ρ is fixed, the time step operator can be restricted to functions defined on rectangular grids with the step size h_i in ith coordinate, $i = \overline{1, n}$. Therefore, this operator will yield fully discrete finite difference schemes when used in the approximation procedure considered below.

Let $\mathcal{M} = T/\rho + 1$. Denote $t_m = m\rho$, $m = 0, ..., \mathcal{M}$, and introduce the following notation:

$$c^m(x_{i_1}, ..., x_{i_n}) = c(t_m, i_1 h_1, ..., i_n h_n),$$
$$\chi^m(x_{i_1}, ..., x_{i_n}) = \chi(t_m, i_1 h_1, ..., i_n h_n),$$
$$\theta^m(x_{i_1}, ..., x_{i_n}) = \theta(t_m, i_1 h_1, ..., i_n h_n).$$

In the case of functional (1), the finite-difference scheme be

$$c^{m-1} = F(c^m; t_m, \rho, h_1, ..., h_n), \ c^{\mathcal{M}} = \chi^{\mathcal{M}}. \tag{7}$$

In the case of functional (2), it is modified as follows:

$$c^{m-1} = \min\{F(c^m; t_m, \rho, h_1, ..., h_n), \chi^m\}, \ c^{\mathcal{M}} = \chi^{\mathcal{M}}. \tag{8}$$

When the state constraint is presented, i.e. the functional (3) is considered, the numerical scheme be

$$c^{m-1} = \max\Big\{\min\{F(c^m; t_m, \rho, h_1, ..., h_n), \chi^m\}, \theta^m\Big\}, \ c^{\mathcal{M}} = \chi^{\mathcal{M}}. \tag{9}$$

The following convergence result holds.

Theorem 1. *Let M be a bound of the right hand side of system (4). If $\dfrac{\rho}{h_i} \leq \dfrac{1}{M\sqrt{n}}$, then the grid functions obtained by the procedures (7), (8), and (9) converge point-wise to the value functions of games (1,4), (2,4), and (3,4), respectively, as $\rho \to 0$, $h_i \to 0$, and the convergence rate is $\max(\sqrt{\rho}, \max_i \sqrt{h_i})$.*

The proof of the Theorem is given in [14] and [16].

5 Example

It should be noted that high-dimensional computation ($n \geq 3$) of value functions of nonlinear differential games with state constraints is a very difficult problem. Since about fifteen years, several groups are working on appropriate numerical methods (see e.g. [17–21]), but only few three-dimensional problems are solved numerically. The following example deals with a very famous unsolved problem.

In the PhD thesis by Pierre Bernhard [22] and in paper [23] by Joseph Lewin and Geert Jan Olsder, a pursuit-evasion game deduced from the game of isotropic

rockets [1] is considered:

$$\begin{aligned} \dot{x} &= -\frac{Wy}{V_p}\sin\phi + V_e \sin\psi, \\ \dot{y} &= \frac{Wx}{V_p}\sin\phi + V_e\cos\psi - V_p, \\ \dot{V}_p &= W\cos\phi. \end{aligned} \tag{10}$$

Here, x and y are the coordinates of the evader (E) in the moving reference system whose origin is at the position of the pursuer (P), and the axis y is directed along the velocity of P; W is the magnitude of the acceleration of P; V_p the magnitude of the velocity of P; ϕ the angle between the vectors of the acceleration and velocity of P (we assume that $-\pi/2 \le \phi \le \pi/2$, i.e. $\dot{V}_p \ge 0$); V_e the magnitude of the velocity of E; ψ the angle between the velocity vector of E and the direction of y-axis ($0 \le \psi \le 2\pi$).

The target set is a a cylinder

$$M = \{(x, y, V_p) : x^2 + y^2 \le 0.3^2\}, \tag{11}$$

and the state constraint set is given by

$$N = \{(x, y, V_p) : a \le V_p \le b\}, \tag{12}$$

where a and b are positive numbers, which will be specified later.

It is observed in [23] that the classical homicidal chauffeur game [1] can be deduced from (10). In fact, permitting only bang-bang controls of the pursuer, $\phi = \pm\pi/2$, implies that $\cos\phi = 0$, and therefore $V_p = const$. Introduce a new control parameter $u = \sin\phi$ of the pursuer and allow it to assume values from the interval $[-1, 1]$ because the control system is linear with respect to u. Moreover, set $W \equiv 1$, $V_p \equiv 1$, $V_e \equiv 0.3$, and introduce new control parameters, $v_1 = V_e \sin\psi$ and $v_2 = V_e \cos\psi$, of the evader. Reduce the target set (11) to $M = \{(x, y) : x^2 + y^2 \le 0.3^2\}$. This yields the classical homicidal chauffeur game

$$\dot{x} = -yu + v_1, \quad \dot{y} = xu + v_2 - 1, \quad |u| \le 1, \quad \sqrt{v_1^2 + v_2^2} \le 0.3 \tag{13}$$

whose numerical solutions are known and can be used for the verification of computations applied to problem (10)–(12). Namely, solutions of (10)–(12) have to converge to the solution of (13) as a and b go to 1 in (12).

The value function of differential game (10)–(12) is computed using the numerical scheme (9). The spatial region and the grid size are chosen as $[-10, 10] \times [-10, 10] \times [0.1, 2]$ and $300 \times 300 \times 60$, respectively. The time horizon T is equal to 7, and the time step equals 0.01. The computation time is about 15 minutes on a Linux SMP-computer with 8xQuad-Core AMD Opteron processors (Model 8384, 2.7 GHz) and shared 64 Gb memory.

Figures 1 and 2 show the computed three-dimensional set

$$\{(x, y, V_p) : c(0, x, y, V_p) \le 0.3\}. \tag{14}$$

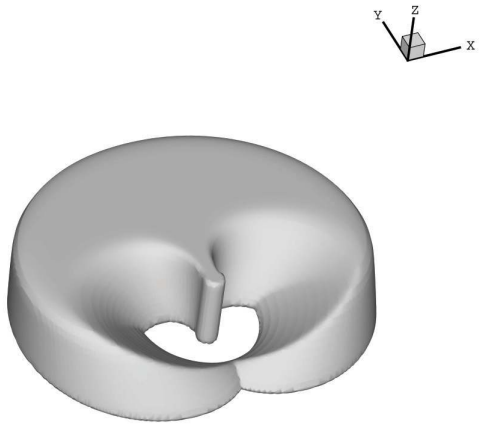

Fig. 1. Level set (14) corresponding to the state constraint $0.8 \leq V_p \leq 1.2$ (z-axis measures V_p).

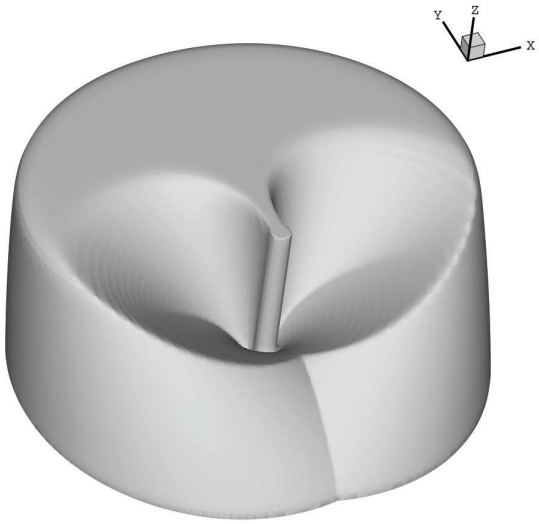

Fig. 2. Level set (14) corresponding to the state constraint $0.5 \leq V_p \leq 1.5$ (z-axis measures V_p).

In the case of Figure 1, state constraint (12) is specified by $a = 0.8$ and $b = 1.2$, whereas $a = 0.5$ and $b = 1.5$ for Figure 2.

Figure 3 shows the comparison of solutions of problems (10)–(12) and (13). Curve 1 bounds the solvability set of problem (13) without any state constraints. Curves 2 and 3 bound the sets

$$\{(x, y) : c(0, x, y, 1) \leq 0.3\}, \tag{15}$$

where c is as before the value function of problem (10) computed with $a = 0.8$ and $b = 1.2$ in the case of curve 2, and $a = 0.5$ and $b = 1.5$ in the case of curve 3. It is seen that the closer a and b are to 1, the closer the corresponding curve is to curve 1.

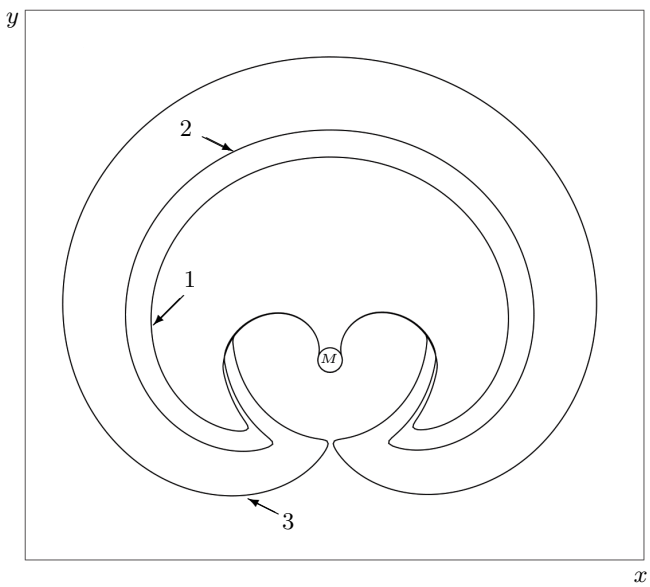

Fig. 3. Comparison of solutions of problems (10)–(12) and (13). Curves 2 and 3 show level set (15) in the case of the state constraints $0.8 \leq V_p \leq 1.2$ and $0.5 \leq V_p \leq 1.5$, respectively. Curve 1 shows the solvability set of problem (13).

Figure 4 shows the case when the state constraint $|y| \leq 3$ is additionally imposed. The obtained set (14) is compared with the set given in Fig. 2.

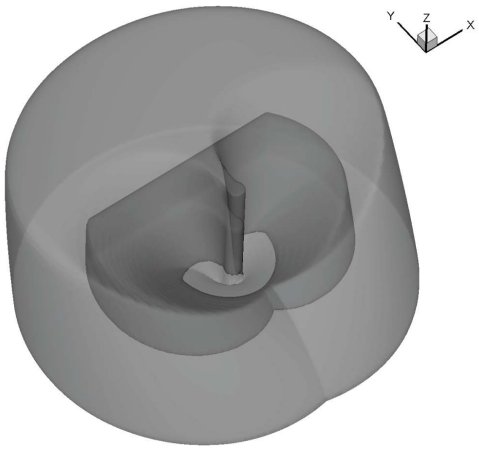

Fig. 4. Comparison of the level set (14) corresponding to the state constraints $0.5 \leq V_p \leq 1.5$ and $|y| \leq 3$ (z-axis measures V_p) with the set from Fig. 2.

6 Conclusion

Our experience shows that the numerical method outlined in this paper is appropriate for solving three- and even four-dimensional nonlinear problems with state constraints. Next steps are to be aimed towards dimensions five and six, which demands sparse representation of grid functions and operations on them, bearing in mind supercomputing systems available now. Such results will allow us to consider e.g. aircraft applications related to essentially nonlinear take-off and landing problems with complex state constraints inherent for them.

Acknowledgements This work was supported by the German Research Society (Deutsche Forschungsgemeinschaft) in the framework of the intention "Optimization with partial differential equations" (SPP 1253) and by Award No KSA-C0069/UK-C0020, made by King Abdullah University of Science and Technology (KAUST).

References

1. Isaacs, R.: Differential Games. John Wiley, New York (1965)
2. Krasovskii, N.N., Subbotin, A.I.: Positional Differential Games. Nauka, Moscow (1974) (in Russian)
3. Krasovskii, N.N., Subbotin, A.I.: Game-Theoretical Control Problems. Springer, New York (1988)
4. Subbotin, A.I., Chentsov, A.G.: Optimization of Guaranteed Result in Control Problems. Nauka, Moscow (1981)
5. Subbotin, A.I.: Generalization of the Main Equation of Differential Game Theory. J. Optimiz. Theory and Appl. 43, 103–133 (1984)

6. Crandall, M.G., Lions, P.L.: Viscosity Solutions of Hamilton-Jacobi Equations. Trans. Amer. Math. Soc. 277, 1–47 (1983)
7. Crandall, M.G., Evans, L.C., Lions, P.L.: Some Properties of Viscosity Solutions of Hamilton-Jacobi Equations. Trans. Amer. Math. Soc. 282, 487–502 (1984)
8. Subbotin, A.I., Taras'yev, A.M.: Stability Properties of the Value Function of a Differential Game and Viscosity Solutions of Hamilton-Jacobi Equations. Problems of Control and Information Theory 15, 451–463 (1986)
9. Crandall, M.G., Lions, P.L.: Two Approximations of Solutions of Hamilton-Jacobi Equations. Math. Comp. 43, 1–19 (1984)
10. Souganidis, P.E.: Approximation Schemes for Viscosity Solutions of Hamilton-Jacobi Equations. J. of Differential Equations 59, 1–43 (1985)
11. Souganidis, P.E.: Max - min Representation and Product Formulas for the Viscosity Solutions of Hamilton-Jacobi Equations with Applications to Differential Games. Nonlinear Analysis, Theory, Methods and Applications 9, 217–257 (1985)
12. Botkin, N.D.: Approximation Schemes for Finding the Value Functions for Differential Games with Nonterminal Payoff Functional. Analysis 14(2), 203–220 (1994)
13. Subbotin, A.I.: Generalized Solutions of First Order PDEs: The Dynamical Optimization Perspective. Birkhäuser, Boston (1995)
14. Botkin, N.D., Hoffmann, K-H., Mayer, N., Turova, V.L.: Approximation Schemes for Solving Disturbed Control Problems with Non-Terminal Time and State Constraints. Analysis 31, 355–379 (2011)
15. Malafeyev, O.A., Troeva, M.S.: A Weak Solution of Hamilton-Jacobi Equation for a Differential Two-Person Zero-Sum Game. In: Eighth International Symposium on Differential Games and Applications, pp. 366–369. Université de Genève, Maastricht (1998)
16. Botkin, N.D., Hoffmann, K-H., Turova, V.L.: Stable Numerical Schemes for Solving Hamilton-Jacobi-Bellmann-Isaacs Equations. SIAM J. on Scientific Computing 33 (2), 992–1007 (2011)
17. Bardi, M., Koike, S., Soravia, P.: Pursuit-Evasion Games with State Constraints: Dynamic Programming and Discrete Time Approximations. Discrete and Continuous Dynamical Sytems, Series A 2(6), 361–380 (2000)
18. Grigor'eva, S.V., Pakhotinskikh, V.Yu., Uspenskii, A.A., Ushakov, V.N.: Construction of Solutions in Certain Differential Games with Phase Constraints. Mat. Sbornik 196(4), 51–78 (2005)
19. Cardaliaguet, P., Quincampoix, M., Saint-Pierre, P.: Differential Games through Viability Theory: Old and Recent Results. In Jorgensen, S., Quincampoix, M., Vincent, T. L. (eds.) Advances in Dynamic Game Theory: Numerical Methods and Applications to Ecology an Economics, Annals of the Int. Society of Dynamic Games IX, pp. 3–35. Birkhäuser, Boston (2007)
20. Cristiani, E., Falcone, M.: Fully-Discrete Schemes for Value Function of Pursuit-Evasion Games with State Constraints. In: Bernhard, P., Gaitsgory, V., Pourtallier, O. (eds.) Advances in Dynamic Games and Their Applications, Annals of the Int. Society of Dynamic Games X, pp. 177–206. Birkhäuser, Boston (2009)
21. Bokanowski, O., Forcadel, N., Zidani, H.: Reachability and Minimal Times for State Constrained Nonlinear Problems without Any Controllability Assumption. SIAM J. on Control and Optimization 48(7), 4292–4316 (2010)
22. Bernhard, P.: Linear Pursuit-Evasion Games and the Isotropic Rocket. PhD Thesis, Stanford University (1971)
23. Lewin, J., Olsder, G.J.: The Isotropic Rocket Surveillance Game. Comput. Math. Appl. 18 (1–3), 15–34 (1989)