HAL
open science

Formal Specification and Verification of Fully Asynchronous Implementations of the Data Encryption Standard

Wendelin Serwe

To cite this version:

Wendelin Serwe. Formal Specification and Verification of Fully Asynchronous Implementations of the Data Encryption Standard. Proceedings of the first Workshop on Models for Formal Analysis of Real Systems (MARS 2015), Nov 2015, Suva, Fiji. 10.4204/EPTCS.196.6 . hal-01227999

HAL Id: hal-01227999

https://inria.hal.science/hal-01227999

Submitted on 23 Nov 2015

HAL is a multi-disciplinary open access archive for the deposit and dissemination of scientific research documents, whether they are published or not. The documents may come from teaching and research institutions in France or abroad, or from public or private research centers.

L'archive ouverte pluridisciplinaire **HAL**, est destinée au dépôt et à la diffusion de documents scientifiques de niveau recherche, publiés ou non, émanant des établissements d'enseignement et de recherche français ou étrangers, des laboratoires publics ou privés.

Formal Specification and Verification of Fully Asynchronous Implementations of the Data Encryption Standard

Wendelin Serwe
Inria
Univ. Grenoble Alpes, LIG, F-38000 Grenoble, France
CNRS, LIG, F-38000 Grenoble, France
wendelin.serwe@inria.fr

This paper presents two formal models of the Data Encryption Standard (DES), a first using the international standard LOTOS, and a second using the more recent process calculus LNT. Both models encode the DES in the style of asynchronous circuits, i.e., the data-flow blocks of the DES algorithm are represented by processes communicating via rendezvous. To ensure correctness of the models, several techniques have been applied, including model checking, equivalence checking, and comparing the results produced by a prototype automatically generated from the formal model with those of existing implementations of the DES. The complete code of the models is provided as appendices and also available on the website of the CADP verification toolbox.

1 Introduction

The Data Encryption Standard (DES) is a symmetric-key encryption algorithm, that has been for almost 30 years a Federal Information Processing Standard [17]. At present, the main weakness of the algorithm is its use of keys of 56 bits, which are too short to withstand brute force attacks. To address this issue, the Triple Data Encryption Algorithm (TDEA or Triple DES) variant [18] applies the DES algorithm three times (encryption, decryption, encryption), using three different keys, and is still an approved symmetric cryptographic algorithm for 8-byte block ciphers, e.g., for secure payment systems [4, Annex B1.1].

An interesting aspect of the DES is that it is specified by a data-flow diagram, i.e., as a set of blocks communicating by message passing. Such an architecture is naturally asynchronous because there is no need for a global clock synchronizing these various blocks. Due to different interleavings of the block executions, the exists a risk that the DES execution produces a nondeterministic result, although this is not expected. This problem naturally lends itself to analysis with process calculi.

A prior case-study [1] analyzed an asynchronous circuit[1] implementing the DES. This circuit was specified in the CHP (Communicating Hardware Processes) [13] process calculus, which was translated into the IF [2] formalism, and subsequently verified using the CADP toolbox [8][2], i.e., the corresponding state space was generated as an LTS (Labeled Transition System) and several properties were verified by model and equivalence checking. To reduce the state space, this prior case-study replaced some of the parallelism by sequential compositions, removing some asynchronism.

The present paper goes further and analyzes the fully asynchronous DES, describing formal models of the DES in two different process calculi, namely the international standard LOTOS [12] and the

[1] An asynchronous circuit is a circuit without clocks, where the different components of the circuit synchronize via handshake protocols. Implementing a cryptographic algorithm as an asynchronous circuit makes it more robust against side channel attacks based on the analysis of the power consumption or radio-emission, which have significantly fewer peaks that could be exploited to get information about the key or data being encrypted [15].

[2] http://cadp.inria.fr

Preliminary Report. Final version to appear in:
MARS 2015

© W. Serwe

more recent LNT language [3], both supported by CADP. The LOTOS model of the DES was directly derived from the DES standard [17] to experiment with the application of LOTOS for the analysis of asynchronous circuits. In August 2015, the LOTOS model was rewritten into an equivalent LNT model to fulfill the expectations of the MARS workshop. Both models have been analyzed using different techniques, namely data abstraction, model checking, equivalence checking, and the automatic generation of a prototype software implementation. All these verification steps have been automated by an SVL (Script Verification Language) [6] script.

The rest of this paper is organized as follows. Section 2 briefly presents the data-flow architecture of the DES. Section 3 discusses modeling challenges and choices. Section 4 (respectively, 5) presents the steps undertaken to assess the correctness of the model with (respectively without) data abstraction. Section 6 gives concluding remarks. Appendix A is the complete source code of the LNT model. Appendix B is the complete source code of the LOTOS model. Appendix C contains the C code required to generate a prototype with the EXEC/CÆSAR framework. Appendix D provides the SVL script to execute the verification scenarios described in this paper.

2 Architecture of the Asynchronous Data Encryption Standard

The DES is an iterative algorithm, which takes as input a 64-bit word[3] of data, a 64-bit key (from which only 56 bits are used), and a bit indicating whether the data is to be encrypted or decrypted, and produces as output a 64-bit word of encrypted or decrypted data. The DES first applies an initial permutation on the input data, splits the 64-bit data word into two 32-bit data words, named L_0 and R_0, and then iteratively computes $L_{n+1} = R_n$ and $R_{n+1} = L_n \oplus f(R_n, K_{n+1})$, where $\oplus$ stands for the bit-wise sum, and f is the so-called *cipher function*. The final result is obtained as the inverse initial permutation applied to the concatenation of R_{16} and L_{16}.

In each iteration, the cipher function f first applies a function named E to expand the 32-bit word R_n to a 48-bit word, and then computes the bit-wise sum with the 48-bit subkey K_n. The result is split into eight 6-bit words, each of which is transformed by a so-called S-box into a 4-bit word. The output of the cipher function is the concatenation of these eight 4-bit words, permuted by a function named P.

To compute the sixteen subkeys K_n (with $n \in \{1, ..., 16\}$), a function named PC1 (permuted choice) selects 56 bits from the 64-bit key, and then splits the result into two 28-bit words, named C_0 and D_0. For iteration n, the subkey K_n is obtained by application of a function named PC2 to select 48 bits from $C_n D_n$, which are defined by successive shift operations according to a schedule defined in the standard. Decryption follows the same scheme, only applying the subkeys in the opposite order.

3 Formal Models of the Asynchronous Data Encryption Standard

Figure 1 shows the overall architecture of the LOTOS and LNT models, which closely follow the architecture of the standard. Each block (permutation, S-box, bit-wise sum, shift, etc.) is represented by a process, communicating by rendezvous with its neighbors. Thus, there is no need for a global clock: each block waits for its operands, performs its operation, and transmits the result to the subsequent block.

In addition to the processes with a direct correspondence to blocks of the DES standard, the models include ten processes without a direct correspondence, but required to share blocks (or processes) among

[3] Longer data must be split into 64-bit words, possibly adding zeros at the end so that the total number of bits is a multiple of 64. Each 64-bit word is then encrypted or decrypted separately.

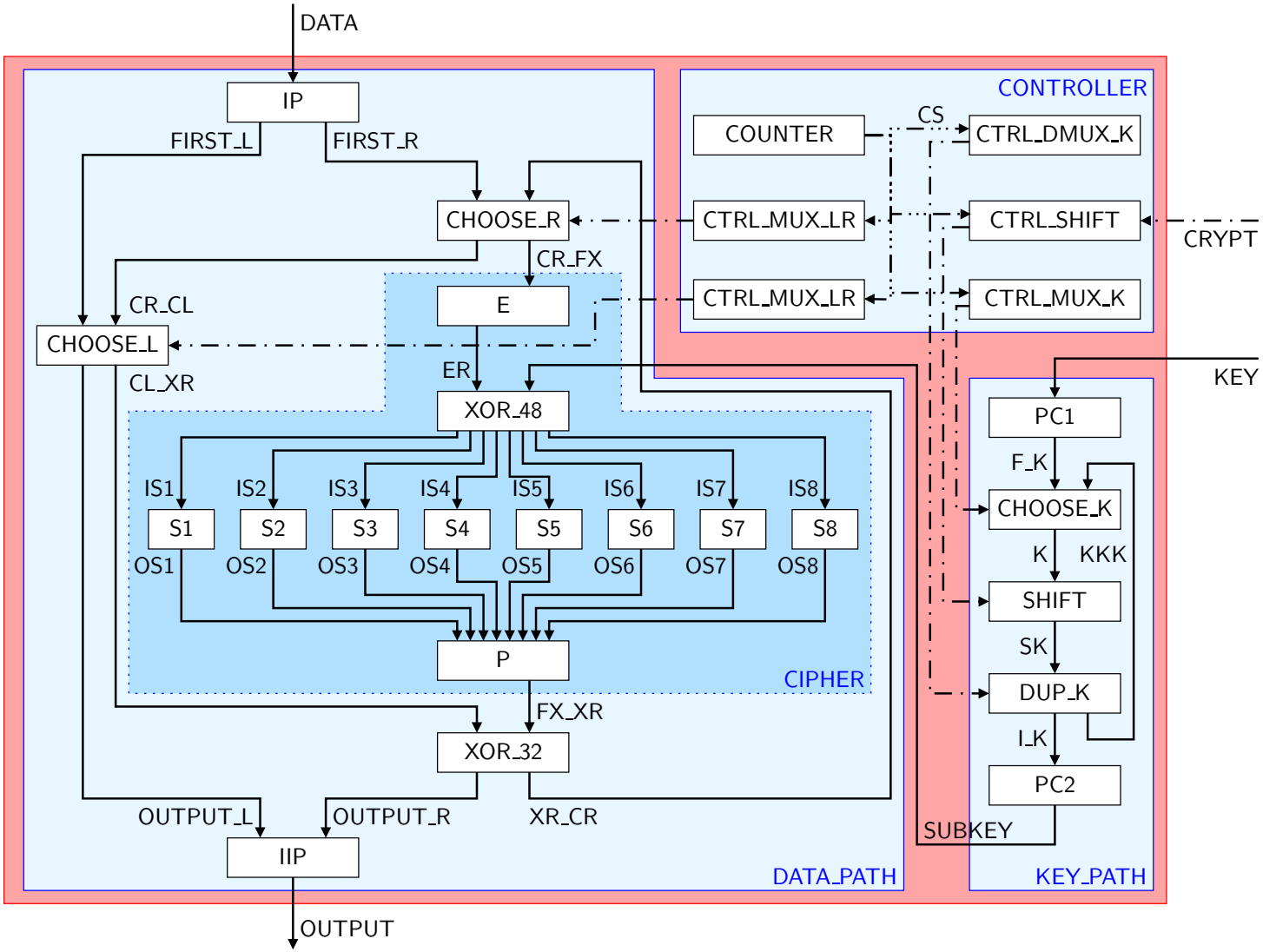

Figure 1: Architecture of the asynchronous Data Encryption Standard. Boxes represent processes, and arrows indicate synchronizations (dashed arrows correspond to the control signals). Arrows are labeled by the name of the corresponding gate, where F_K stands for FIRST_K, and I_K stands for INTERMEDIATE_K.

all iterations of the algorithm: the six processes of the CONTROLLER, and the four processes CHOOSE_L, CHOOSE_R, CHOOSE_K, and DUP_K. The latter four are arbiters and/or multiplexers, which select among several inputs and possibly duplicate their output.

The process COUNTER generates the control signal "CS !*i*", where *i* starts from 0 and is increased up to 16, thus indicating seventeen steps (one more than the number of iterations in the algorithm). The signal CS is sent to the five other processes of the CONTROLLER, which in turn indicate to the shift register the number and direction of the shift(s) and to the four arbiters which input to read from and/or which output to write to. Seventeen steps are required because the processes CHOOSE_L and CHOOSE_R take as input either the initial data or the result of the previous iteration, and output either to the next iteration or the final output. Hence it is necessary to execute them before and after the sixteen iterations, explaining the additional step. Precisely, the rendezvous "CS !16" triggers a rendezvous only in process CTRL_MUX_LR, whereas it is simply consumed by CTRL_MUX_K, CTRL_DMUX_K, and CTRL_SHIFT.

Notice that the formal models contain no non-deterministic choice (**select** operator of LNT or "**[]**" operator of LOTOS), because every block of the DES is deterministic.

The complete LOTOS and LNT models are given as appendices and also available on the CADP website[4]. Table 1 gives the number of lines for the two models, plus those of the LOTOS model generated by the LNT2LOTOS translator from the LNT model. The LNT model is significantly shorter and syntactically closer to the DES standard. In particular, the definition of the S-boxes using tables (as in the standard) is more convenient, due to the automatically defined functions to manipulate arrays. Compared to the hand-written models, the generated LOTOS model is much larger due to many automatically generated functions and auxiliary processes that are "inlined" in the hand-written models.

Rewriting the LOTOS model into LNT uncovered a few errors in the LOTOS definitions of the S-boxes and a small bug[5] in the LNT2LOTOS translator. This rewrite also showed that the controller was too restrictive. Precisely, the five control processes (CTRL_MUX_K, CTRL_SHIFT, CTRL_DMUX_K, and the two instances of CTRL_MUX_LR) were synchronized at the end of an encoding or decoding, although CTRL_SHIFT could accept a new input on gate CRYPT as soon as the shift-command for the generation of the last subkey has been sent to the shift register.[6]

4 Analysis of the Abstract Model

Analyzing the DES with enumerative techniques is challenging, because it is unfeasible to enumerate all 64-bit vectors. A first approach is to abstract from the actual *data* values and to focus the analysis on the control part, e.g., check whether the sixteen iterations are correctly synchronized. Redefining the BIT data type to contain a single value (instead of two values), automatically transforms all bit-vector types into singleton types and all functions operating on bit vectors to the identity function.[7] Due to this drastic abstraction, enumerating all possible inputs is trivial, enabling LTS generation without resorting to environments and compositional techniques [7].

[4] `http://cadp.inria.fr/demos/demo_38`

[5] See entry #2076 in the list of changes to CADP (`http://cadp.inria.fr/changes.html`).

[6] Removing this unnecessary synchronization (also present in the CHP and IF models) slightly increases the LTS size: the initial LOTOS model yielded an LTS with 588,785,433 states and 5,512,418,012 transitions.

[7] The IF model [1] used a similar abstraction.

[8] The significantly smaller size (5.3 million states and 30 million transitions) of the LTS corresponding to the IF model [1] is explained by the fact that in the IF model the eight S-boxes execute sequentially rather than in parallel [16, page 305, footnote 4]. Applying a similar restriction to the LNT model, the size of the corresponding LTS drops to 1,375,048 states and 7,804,352 transitions (respectively to 8,183,770 states and 45,025,227 transitions for a restricted LOTOS model). A further difference is

	LOTOS	LNT	gen. LOTOS
types & functions	1172	575	2514
channels	0	50	58
processes	671	668	772
total	*1843*	*1293*	*3344*

Table 1: Line number count of the models

	LOTOS	LNT
states	591,914,192	167,300,852
transitions	5,542,917,498	1,500,073,686
time (min)	228	66
RAM (GB)	19.13	4.93

Table 2: Direct LTS Generation
(on an Xeon(R) E5-2630 at 2.4 GHz)[8]

Direct LTS Generation and Equivalence between the LNT and LOTOS Models. Table 2 gives statistics about the LTSs generated directly from the abstract models. The two models (LOTOS and LNT) yield LTSs equivalent for branching (but not strong) bisimulation (checked by PROPERTY_7 of the SVL script given in Appendix D). In both cases, the LTS minimized for branching bisimulation has 28 states and 78 transitions.

The significant difference in LTS size between the LNT model and the LOTOS model is explained by the semantic difference in the symmetric sequential composition [5]. The LOTOS operator "$>>$" generates an internal "**i**" transition, whereas the LNT operator "**;**" does not. Such a symmetric sequential composition (rather than a simple action prefix) is required whenever a process can read several inputs in parallel before producing its output. This is in particular the case for process P, which reads the output of the eight S-boxes. When these internal "**i**" transitions are removed by adding the pragma "*(*! atomic *)*" to all occurrences of "$>>$", the LOTOS model yields an LTS of exactly the same size as the LNT model.

The LTS obtained after removing all offers (using appropriate renaming operations, i.e., those applied to file des_sample.bcg in PROPERTY_6 of the SVL script given in Appendix D) and minimization using branching bisimulation is shown in Figure 2.

Compositional LTS Generation. Compositional LTS generation, i.e., the bottom-up LTS construction alternating generation and minimization steps, is much more efficient. The initial steps of the SVL script given in Appendix D require at most 50 MB of RAM and generate the minimized LTS (28 states and 78 transitions) in less than 90 seconds. The success of compositional techniques on the LOTOS model triggered the development of the CHP2LOTOS translator [10] to provide the full power of CADP to the designers of asynchronous circuits.

Model Checking. Several properties of the control part have been analyzed formally, using model checking and equivalence checking on the LTS generated compositionally from the abstract models.

A first property, called PROPERTY_1 in the SVL script, expresses the absence of deadlocks.

A second property, called PROPERTY_2 expresses the fact that a triplet of inputs on gates CRYPT, DATA, and KEY is eventually followed by an rendezvous on gate OUTPUT.

A third property, called PROPERTY_3, describes the asynchronism of the DES models, i.e., that the DES may accept the inputs for N future rounds before it produces the result of the current round. This property is expressed by two temporal logic formulæ, a first one expressing that the DES never accepts more than N inputs in advance, and a second one expressing that there exists an execution, where the DES indeed accepts N inputs in advance. This third property is parametric, because N varies for the three inputs DATA, CRYPT, and KEY.

A last property, called PROPERTY_4, expresses the correct synchronization between the data path and the key path, namely that each encoding or decoding executes the sixteen iterations. This property can

that the controller in the IF model is a single automaton and enforces a stronger ordering between the inputs and outputs than the more asynchronous architecture shown in Figure 1.

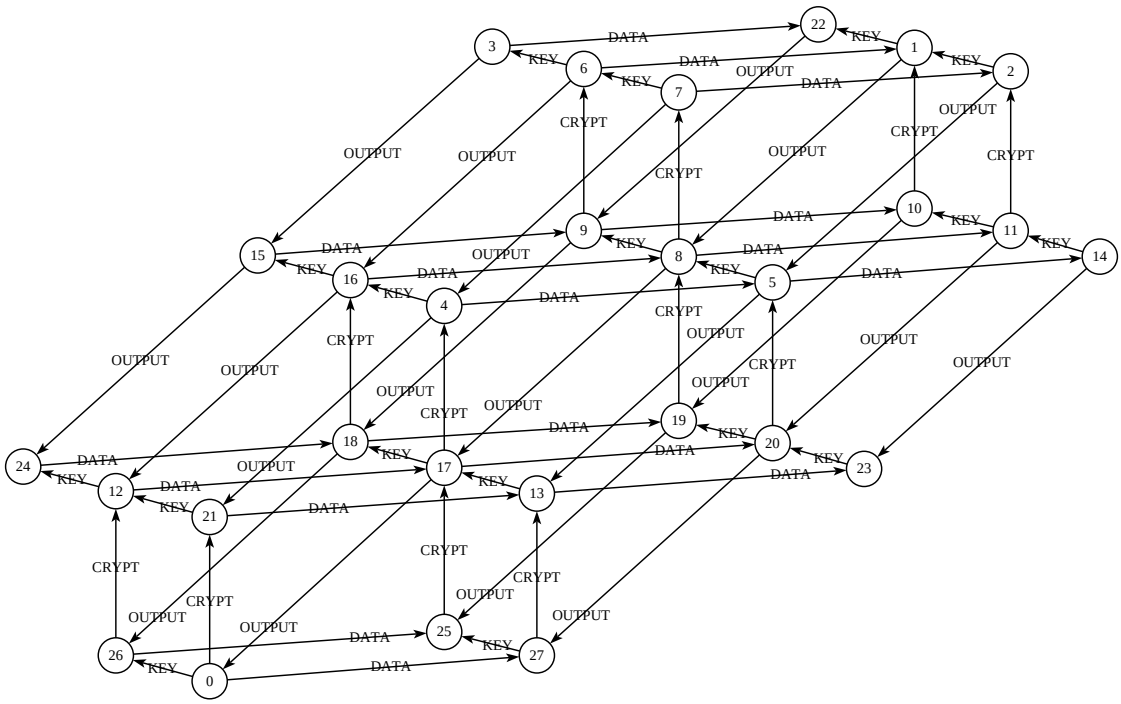

Figure 2: LTS of the abstract DES. All offers have been stripped from the transition labels. Thus, a transition labeled with CRYPT represents two transitions, labeled "CRYPT !false" and "CRYPT !true". For all other transitions, the offer corresponds to the single value in the domain of abstract 64-bit vectors.

be verified in two ways: by model checking a temporal logic formula and by checking the equivalence of the generated labeled transition system with a simple automaton containing a loop of sixteen SUBKEY transitions (because there must be a subkey per iteration) interleaved with a CRYPT transition (because each encoding or decoding requires one such transition). The LNT (respectively, LOTOS) model of this automaton is given in Appendix A.13 (respectively, B.14). Notice that this verification requires to keep the SUBKEY gate visible.

5 Analysis of the Concrete Model

The concrete models (i.e., without data abstraction) can be used to check the correctness of the results computed by the DES. Two different approaches were used: model checking and the generation of a prototype implementation.

Rapid Prototyping. Using the EXEC/CÆSAR framework [11] for rapid prototyping, it is possible to generate a C implementation of the LOTOS or LNT model: one only has to provide C functions implementing the interaction with the environment on the visible gates CRYPT, DATA, KEY, and OUTPUT. This C code is given in Appendix C.

We first checked that the prototype is reversible, i.e., that deciphering a cipher with the same key results in the original data. These tests helped to spot and correct some errors in the subkey generation.

We also compared the results of the prototypes (LOTOS and LNT), and to those of some other publicly available implementations[9]. These comparisons helped to spot and correct a handful of differences

[9]See for instance `https://www.schneier.com/books/applied_cryptography/source.html`

caused by typographic errors, i.e., bad copying of the DES standard into LOTOS and LNT. The compilation and execution of the prototype implementation corresponds to PROPERTY_5 in the SVL script given in Appendix D. Although using a handful of tests is far from exhaustive, the structure of the DES with its iterations, permutations and bit operations and the fact that cipher heavily shuffles the input data lead to a coverage sufficient for the purpose of analyzing the *control* part.

Model Checking. The generation of an LTS from the concrete model requires an environment to restrict the domain of possible input values. The model DES_SAMPLE is such a variant of the concrete one, including a sequential environment providing a key and a data for a single encryption and checking the correctness of the output. The direct generation of the corresponding LTS (10,156,715 states and 75,933,635 transitions for the LNT model, and 32,219,740 states and 259,010,596 transitions for the LOTOS model) requires less than 6 GB of RAM.

The correctness of the computed result can verified by model checking a property expressing that the action on gate OUTPUT is eventually reached. A second verification is that after removing all offers, the LTS is included in the LTS of Figure 2. These verifications are carried out by the PROPERTY_6 in the SVL script given in Appendix D.

6 Conclusion

This paper presents two formal models of the Data Encryption Standard, which might be an interesting benchmark example, because it is both complex and tractable (with current hardware and/or compositional techniques). For instance, it is sufficiently large to make interesting screenshots of the monitor of the distributed state space generation tool DISTRIBUTOR [9] (see also the DISTRIBUTOR manual page[10]). These models also illustrate an interesting feature of LOTOS and LNT, namely the possibility to easily change the implementation of a data type to transform a prototype implementation into an abstract model adapted to formal verification.

Acknowledgements. Some of the experiments presented in this paper were carried out using the Grid'5000 experimental testbed[11] built by Inria with support from CNRS, RENATER, several Universities, and other funding bodies. I am grateful to Hubert Garavel for his suggestion to improve the model(s) and their presentation. I would like to thank Edith Beigné, François Bertrand, Pascal Vivet (CEA Leti), Dominique Borrione, Menouer Boubekeur, Marc Renaudin (TIMA), and Gwen Salaün (Inria) for discussions about asynchronous logic, the CHP language, and the implementation of the DES in asynchronous logic.

References

[1] Dominique Borrione, Menouer Boubekeur, Laurent Mounier, Marc Renaudin & Antoine Sirianni (2006): *Validation of Asynchronous Circuit Specifications using IF/CADP*. In: *VLSI-SOC: From Systems to Chip, Selected papers from the IFIP Conference on Very Large Scale Integration of System-on-Chip (VLSI-SoC'03)*, 200, International Federation for Information Processing, pp. 85–100, doi:10.1007/0-387-33403-3_6.

[2] Marius Bozga, Jean-Claude Fernandez, Lucian Ghirvu, Susanne Graf, Jean-Pierre Krimm & Laurent Mounier (1999): *IF: An Intermediate Representation and Validation Environment for Timed Asynchronous*

[10] http://cadp.inria.fr/man/distributor.html#sect7

[11] See http://www.grid5000.fr

Systems. In: *Proceedings of World Congress on Formal Methods in the Development of Computing Systems (FM'99), Toulouse, France*, Springer Verlag, doi:10.1007/3-540-48119-2_19.

[3] David Champelovier, Xavier Clerc, Hubert Garavel, Yves Guerte, Christine McKinty, Vincent Powazny, Frédéric Lang, Wendelin Serwe & Gideon Smeding (2015): *Reference Manual of the LNT to LOTOS Translator (Version 6.3)*. Available at http://cadp.inria.fr/publications/Champelovier-Clerc-Garavel-et-al-10.html. INRIA/VASY and INRIA/CONVECS, 135 pages.

[4] EMVCo (2011): *EMV Specification 4.3, Book 2, Security and Key Management*. Technical Report.

[5] Hubert Garavel (2015): *Revisiting Sequential Composition in Process Calculi*. *Journal of Logical and Algebraic Methods in Programming* 84(6), pp. 742–762, doi:10.1016/j.jlamp.2015.08.001.

[6] Hubert Garavel & Frédéric Lang (2001): *SVL: a Scripting Language for Compositional Verification*. In: *Proceedings of the 21st IFIP WG 6.1 International Conference on Formal Techniques for Networked and Distributed Systems (FORTE'01), Cheju Island, Korea*, Kluwer Academic Publishers, pp. 377–392, doi:10.1007/0-306-47003-9_24. Available at http://cadp.inria.fr/publications/Garavel-Lang-01.html.

[7] Hubert Garavel, Frédéric Lang & Radu Mateescu (2015): *Compositional Verification of Asynchronous Concurrent Systems Using CADP*. *Acta Informatica* 52(4), pp. 337–392, doi:10.1007/s00236-015-0226-1. Available at http://cadp.inria.fr/publications/Garavel-Lang-Mateescu-15.html.

[8] Hubert Garavel, Frédéric Lang, Radu Mateescu & Wendelin Serwe (2013): *CADP 2011: A Toolbox for the Construction and Analysis of Distributed Processes*. *Springer International Journal on Software Tools for Technology Transfer (STTT)* 15(2), pp. 89–107, doi:10.1007/s10009-012-0244-z. Available at http://cadp.inria.fr/publications/Garavel-Lang-Mateescu-Serwe-13.html.

[9] Hubert Garavel, Radu Mateescu, Damien Bergamini, Adrian Curic, Nicolas Descoubes, Christophe Joubert, Irina Smarandache-Sturm & Gilles Stragier (2006): *DISTRIBUTOR and BCG_MERGE: Tools for Distributed Explicit State Space Generation*. In: *Proceedings of the 12th International Conference on Tools and Algorithms for the Construction and Analysis of Systems TACAS'2006 (Vienna, Austria), Lecture Notes in Computer Science* 3920, Springer Verlag, pp. 445–449, doi:10.1007/11691372_30. Available at http://cadp.inria.fr/publications/Garavel-Mateescu-Bergamini-et-al-06.html.

[10] Hubert Garavel, Gwen Salaün & Wendelin Serwe (2009): *On the Semantics of Communicating Hardware Processes and their Translation into LOTOS for the Verification of Asynchronous Circuits with CADP*. *Science of Computer Programming* 74(3), pp. 100–127, doi:10.1016/j.scico.2008.09.011. Available at http://cadp.inria.fr/publications/Garavel-Salaun-Serwe-09.html.

[11] Hubert Garavel, César Viho & Massimo Zendri (2001): *System Design of a CC-NUMA Multiprocessor Architecture using Formal Specification, Model-Checking, Co-Simulation, and Test Generation*. *Springer International Journal on Software Tools for Technology Transfer (STTT)* 3(3), pp. 314–331, doi:10.1007/s100090100044. Available at http://cadp.inria.fr/publications/Garavel-Viho-Zendri-00.html.

[12] ISO/IEC (1989): *LOTOS — A Formal Description Technique Based on the Temporal Ordering of Observational Behaviour*. International Standard 8807, International Organization for Standardization — Information Processing Systems — Open Systems Interconnection, Geneva.

[13] Alain J. Martin (1986): *Compiling Communicating Processes into Delay-Insensitive VLSI Circuits*. *Distributed Computing* 1(4), pp. 226–234, doi:10.1007/BF01660034.

[14] Radu Mateescu & Damien Thivolle (2008): *A Model Checking Language for Concurrent Value-Passing Systems*. In: *Proceedings of the 15th International Symposium on Formal Methods (FM'08), Turku, Finland, Lecture Notes in Computer Science* 5014, Springer Verlag, pp. 148–164, doi:10.1007/978-3-540-68237-0_12. Available at http://cadp.inria.fr/publications/Mateescu-Thivolle-08.html.

[15] Simon Moore, Ross Anderson, Paul Cunningham, Robert Mullins & George Taylor (2002): *Improving Smart Card Security using Self-timed Circuits*. In: *Proceedings of the Eighth International Symposium on Asyn-*

chronous Circuits and Systems (ASYNC'02), Manchester, United Kingdom, IEEE, pp. 211–218, doi:10.1109/ASYNC.2002.1000311.

[16] Gwen Salaün & Wendelin Serwe (2005): *Translating Hardware Process Algebras into Standard Process Algebras — Illustration with CHP and LOTOS*. In: *Proceedings of the 5th International Conference on Integrated Formal Methods (IFM'05), Eindhoven, The Netherlands, Lecture Notes in Computer Science* 3771, Springer Verlag, doi:10.1007/11589976_17. Available at http://cadp.inria.fr/publications/Salaun-Serwe-05.html.

[17] National Institute of Standards & Technology (1999): *Data Encryption Standard (DES)*. Federal Information Processing Standards Publication 46-3. Available at http://csrc.nist.gov/publications/fips/fips46-3/fips46-3.pdf.

[18] National Institute of Standards & Technology (2012): *Recommendation for the Triple Data Encryption Algorithm (TDEA) Block Cipher*. NIST Special Publication 800-67, Revision 1. Available at http://csrc.nist.gov/publications/nistpubs/800-67-Rev1/SP-800-67-Rev1.pdf.

A LNT Model of an Asynchronous DES

This appendix gives the complete LNT model of the DES, as required by the SVL verification scenario given in Appendix D. This model requires CADP version 2015-h "Stony Brook" (August 2015) or later. The syntax and semantics of LNT is defined in the reference manual [3].

A.1 Module BIT_CONCRETE

```
module BIT_CONCRETE is

type BIT is
   -- bit data type with two different values
   0 !implementedby "BIT_ZERO",
   1 !implementedby "BIT_ONE"
   with "=="
end type

end module
```

A.2 Module BIT_ABSTRACT

This module defines the abstraction replacing the concrete implementation of type BIT (see module BIT_CONCRETE.lnt above), transforming the two-valued type into a singleton, which transitively transforms all bit vectors into singletons as well, thus completely abstracting data.

```
module BIT_ABSTRACT is

type BIT is
   -- bit data type abstracted to a single value
   0
   with "=="
end type

function 1 : BIT is
   return 0
end function
```

```
end module
```

A.3 Module TYPES

```
module TYPES (BIT) with "get" is

--------------------------------------------------------------------------
-- exclusive-or operation on (abstract or concrete) bits

function _xor_ (X, Y : BIT) : BIT is
   if X == Y then
      return 0
   else
      return 1
   end if
end function

--------------------------------------------------------------------------
-- data type for counting the iterations of the algorithm

type ITERATION is
   range 0 .. 16 of NAT
   with "==", "!=", "first", "last"
end type

--------------------------------------------------------------------------
-- data type for the controlling the behavior of the shift register

type SHIFT is
   NO,  -- no shift
   LS1, -- 1 left shift
   LS2, -- 2 left shifts
   RS1, -- 1 right shift
   RS2  -- 2 right shifts
   with "=="
end type

--------------------------------------------------------------------------
-- data type for the control signals used for the multiplexers

type PHASE is
   F, -- first iteration
   N, -- intermediate iteration
   L  -- last iteration
   with "=="
end type

--------------------------------------------------------------------------
-- 2-bit vectors
```

```
type BIT2 is
   MK_2 (B1, B2: BIT)
end type

--------------------------------------------------------------------------
-- conversion of a 2-bit vector into a natural number
-- note: the most significant bit is B1

function BIT2_TO_NAT (X: BIT2) : NAT is
   var N: NAT in
      N := 0;
      if X.B1 == 1 then N := N + 2 end if;
      if X.B2 == 1 then N := N + 1 end if;
      return N
   end var
end function

--------------------------------------------------------------------------
-- 4-bit vectors

type BIT4 is !implementedby "ADT_BIT4"
   MK_4 (B1, B2, B3, B4: BIT) !implementedby "MK_4"
end type

--------------------------------------------------------------------------
-- conversion of a 4-bit vector into a natural number
-- note: the most significant bit is B1

function BIT4_TO_NAT (X: BIT4) : NAT is
   var N: NAT in
      N := 0;
      if X.B1 == 1 then N := N + 8 end if;
      if X.B2 == 1 then N := N + 4 end if;
      if X.B3 == 1 then N := N + 2 end if;
      if X.B4 == 1 then N := N + 1 end if;
      return N
   end var
end function

--------------------------------------------------------------------------
-- conversion of a natural number into a 4-bit vector
-- note: the most significant bit is B1

function NAT_TO_BIT4 (N: NAT) : BIT4 is
   case N in
      0      -> return MK_4 (0, 0, 0, 0)
    | 1      -> return MK_4 (0, 0, 0, 1)
    | 2      -> return MK_4 (0, 0, 1, 0)
    | 3      -> return MK_4 (0, 0, 1, 1)
    | 4      -> return MK_4 (0, 1, 0, 0)
    | 5      -> return MK_4 (0, 1, 0, 1)
    | 6      -> return MK_4 (0, 1, 1, 0)
```

```
   |  7       -> return MK_4 (0, 1, 1, 1)
   |  8       -> return MK_4 (1, 0, 0, 0)
   |  9       -> return MK_4 (1, 0, 0, 1)
   | 10       -> return MK_4 (1, 0, 1, 0)
   | 11       -> return MK_4 (1, 0, 1, 1)
   | 12       -> return MK_4 (1, 1, 0, 0)
   | 13       -> return MK_4 (1, 1, 0, 1)
   | 14       -> return MK_4 (1, 1, 1, 0)
   | any NAT -> return MK_4 (1, 1, 1, 1)
   end case
end function

-------------------------------------------------------------------------------
-- 6-bit vectors

type BIT6 is
   MK_6 (B1, B2, B3, B4, B5, B6: BIT)
end type

-------------------------------------------------------------------------------
-- projection of 6-bit vectors to 2-bit vectors

function 1AND6 (X: BIT6) : BIT2 is
   return MK_2 (X.B1, X.B6)
end function

-------------------------------------------------------------------------------
-- projection of 6-bit vectors to 4-bit vectors

function 2TO5 (X: BIT6) : BIT4 is
   return MK_4 (X.B2, X.B3, X.B4, X.B5)
end function

-------------------------------------------------------------------------------
-- 32-bit vectors

type BIT32 is
   MK_32 (B1,  B2,  B3,  B4,  B5,  B6,  B7,  B8,
          B9,  B10, B11, B12, B13, B14, B15, B16,
          B17, B18, B19, B20, B21, B22, B23, B24,
          B25, B26, B27, B28, B29, B30, B31, B32: BIT)
end type

-------------------------------------------------------------------------------
-- bitwise XOR for 32-bit vectors

function XOR (A, B: BIT32) : BIT32 is
   return MK_32 (A.B1  xor B.B1,  A.B2  xor B.B2,
                 A.B3  xor B.B3,  A.B4  xor B.B4,
                 A.B5  xor B.B5,  A.B6  xor B.B6,
                 A.B7  xor B.B7,  A.B8  xor B.B8,
                 A.B9  xor B.B9,  A.B10 xor B.B10,
```

```
                  A.B11 xor B.B11, A.B12 xor B.B12,
                  A.B13 xor B.B13, A.B14 xor B.B14,
                  A.B15 xor B.B15, A.B16 xor B.B16,
                  A.B17 xor B.B17, A.B18 xor B.B18,
                  A.B19 xor B.B19, A.B20 xor B.B20,
                  A.B21 xor B.B21, A.B22 xor B.B22,
                  A.B23 xor B.B23, A.B24 xor B.B24,
                  A.B25 xor B.B25, A.B26 xor B.B26,
                  A.B27 xor B.B27, A.B28 xor B.B28,
                  A.B29 xor B.B29, A.B30 xor B.B30,
                  A.B31 xor B.B31, A.B32 xor B.B32)
end function

-------------------------------------------------------------------------
-- concatenation of eight 4-bit vectors to form a 32-bit vector

function MK_32 (V1, V2, V3, V4, V5, V6, V7, V8: BIT4) : BIT32 is
   return MK_32 (V1.B1, V1.B2, V1.B3, V1.B4,  V2.B1, V2.B2, V2.B3, V2.B4,
                 V3.B1, V3.B2, V3.B3, V3.B4,  V4.B1, V4.B2, V4.B3, V4.B4,
                 V5.B1, V5.B2, V5.B3, V5.B4,  V6.B1, V6.B2, V6.B3, V6.B4,
                 V7.B1, V7.B2, V7.B3, V7.B4,  V8.B1, V8.B2, V8.B3, V8.B4)
end function

-------------------------------------------------------------------------
-- 48-bit vectors

type BIT48 is
   MK_48 (B1,  B2,  B3,  B4,  B5,  B6,  B7,  B8,
          B9,  B10, B11, B12, B13, B14, B15, B16,
          B17, B18, B19, B20, B21, B22, B23, B24,
          B25, B26, B27, B28, B29, B30, B31, B32,
          B33, B34, B35, B36, B37, B38, B39, B40,
          B41, B42, B43, B44, B45, B46, B47, B48: BIT)
end type

-------------------------------------------------------------------------
-- bitwise XOR for 48-bit vectors

function XOR (A, B: BIT48) : BIT48 is
   return MK_48 (A.B1  xor B.B1,  A.B2  xor B.B2,
                 A.B3  xor B.B3,  A.B4  xor B.B4,
                 A.B5  xor B.B5,  A.B6  xor B.B6,
                 A.B7  xor B.B7,  A.B8  xor B.B8,
                 A.B9  xor B.B9,  A.B10 xor B.B10,
                 A.B11 xor B.B11, A.B12 xor B.B12,
                 A.B13 xor B.B13, A.B14 xor B.B14,
                 A.B15 xor B.B15, A.B16 xor B.B16,
                 A.B17 xor B.B17, A.B18 xor B.B18,
                 A.B19 xor B.B19, A.B20 xor B.B20,
                 A.B21 xor B.B21, A.B22 xor B.B22,
                 A.B23 xor B.B23, A.B24 xor B.B24,
                 A.B25 xor B.B25, A.B26 xor B.B26,
```

```
                    A.B27 xor B.B27, A.B28 xor B.B28,
                    A.B29 xor B.B29, A.B30 xor B.B30,
                    A.B31 xor B.B31, A.B32 xor B.B32,
                    A.B33 xor B.B33, A.B34 xor B.B34,
                    A.B35 xor B.B35, A.B36 xor B.B36,
                    A.B37 xor B.B37, A.B38 xor B.B38,
                    A.B39 xor B.B39, A.B40 xor B.B40,
                    A.B41 xor B.B41, A.B42 xor B.B42,
                    A.B43 xor B.B43, A.B44 xor B.B44,
                    A.B45 xor B.B45, A.B46 xor B.B46,
                    A.B47 xor B.B47, A.B48 xor B.B48)
end function

-------------------------------------------------------------------------------
-- projections of 48-bit vectors to 6-bit vectors

function 1TO6 (X: BIT48) : BIT6 is
   return MK_6 (X.B1, X.B2, X.B3, X.B4, X.B5, X.B6)
end function

function 7TO12 (X: BIT48) : BIT6 is
   return MK_6 (X.B7, X.B8, X.B9, X.B10, X.B11, X.B12)
end function

function 13TO18 (X: BIT48) : BIT6 is
   return MK_6 (X.B13, X.B14, X.B15, X.B16, X.B17, X.B18)
end function

function 19TO24 (X: BIT48) : BIT6 is
   return MK_6 (X.B19, X.B20, X.B21, X.B22, X.B23, X.B24)
end function

function 25TO30 (X: BIT48) : BIT6 is
   return MK_6 (X.B25, X.B26, X.B27, X.B28, X.B29, X.B30)
end function

function 31TO36 (X: BIT48) : BIT6 is
   return MK_6 (X.B31, X.B32, X.B33, X.B34, X.B35, X.B36)
end function

function 37TO42 (X: BIT48) : BIT6 is
   return MK_6 (X.B37, X.B38, X.B39, X.B40, X.B41, X.B42)
end function

function 43TO48 (X: BIT48) : BIT6 is
   return MK_6 (X.B43, X.B44, X.B45, X.B46, X.B47, X.B48)
end function

-------------------------------------------------------------------------------
-- 56-bit vectors

type BIT56 is
```

```
   MK_56 (B1,  B2,  B3,  B4,  B5,  B6,  B7,  B8,
          B9,  B10, B11, B12, B13, B14, B15, B16,
          B17, B18, B19, B20, B21, B22, B23, B24,
          B25, B26, B27, B28, B29, B30, B31, B32,
          B33, B34, B35, B36, B37, B38, B39, B40,
          B41, B42, B43, B44, B45, B46, B47, B48,
          B49, B50, B51, B52, B53, B54, B55, B56: BIT)
end type

-------------------------------------------------------------------------
-- left shift of a 56-bit vector
-- note: more precisely, parallel left shift of two 28-bit vectors

function LSHIFT (X: BIT56) : BIT56 is
   return MK_56 (X.B2,  X.B3,  X.B4,  X.B5,  X.B6,  X.B7,  X.B8,  X.B9,
                 X.B10, X.B11, X.B12, X.B13, X.B14, X.B15, X.B16, X.B17,
                 X.B18, X.B19, X.B20, X.B21, X.B22, X.B23, X.B24, X.B25,
                 X.B26, X.B27, X.B28, X.B1,  X.B30, X.B31, X.B32, X.B33,
                 X.B34, X.B35, X.B36, X.B37, X.B38, X.B39, X.B40, X.B41,
                 X.B42, X.B43, X.B44, X.B45, X.B46, X.B47, X.B48, X.B49,
                 X.B50, X.B51, X.B52, X.B53, X.B54, X.B55, X.B56, X.B29)
end function

-------------------------------------------------------------------------
-- right shift of a 56-bit vector
-- note: more precisely, parallel right shift of two 28-bit vectors

function RSHIFT (X: BIT56) : BIT56 is
   return MK_56 (X.B28, X.B1,  X.B2,  X.B3,  X.B4,  X.B5,  X.B6,  X.B7,
                 X.B8,  X.B9,  X.B10, X.B11, X.B12, X.B13, X.B14, X.B15,
                 X.B16, X.B17, X.B18, X.B19, X.B20, X.B21, X.B22, X.B23,
                 X.B24, X.B25, X.B26, X.B27, X.B56, X.B29, X.B30, X.B31,
                 X.B32, X.B33, X.B34, X.B35, X.B36, X.B37, X.B38, X.B39,
                 X.B40, X.B41, X.B42, X.B43, X.B44, X.B45, X.B46, X.B47,
                 X.B48, X.B49, X.B50, X.B51, X.B52, X.B53, X.B54, X.B55)
end function

-------------------------------------------------------------------------
-- 64-bit vectors

type BIT64 is !implementedby "ADT_BIT64" !printedby "ADT_PRINT_BIT64"
   MK_64 (B1,  B2,  B3,  B4,  B5,  B6,  B7,  B8,
          B9,  B10, B11, B12, B13, B14, B15, B16,
          B17, B18, B19, B20, B21, B22, B23, B24,
          B25, B26, B27, B28, B29, B30, B31, B32,
          B33, B34, B35, B36, B37, B38, B39, B40,
          B41, B42, B43, B44, B45, B46, B47, B48,
          B49, B50, B51, B52, B53, B54, B55, B56,
          B57, B58, B59, B60, B61, B62, B63, B64: BIT)
   !implementedby "MK_64"
   with "==", "!="
end type
```

```
-- projections of 64-bit vectors to 32-bit vectors

function 1TO32 (X: BIT64) : BIT32 is
   return MK_32 (X.B1,  X.B2,  X.B3,  X.B4,  X.B5,  X.B6,  X.B7,  X.B8,
                 X.B9,  X.B10, X.B11, X.B12, X.B13, X.B14, X.B15, X.B16,
                 X.B17, X.B18, X.B19, X.B20, X.B21, X.B22, X.B23, X.B24,
                 X.B25, X.B26, X.B27, X.B28, X.B29, X.B30, X.B31, X.B32)
end function

function 33TO64 (X: BIT64) : BIT32 is
   return MK_32 (X.B33, X.B34, X.B35, X.B36, X.B37, X.B38, X.B39, X.B40,
                 X.B41, X.B42, X.B43, X.B44, X.B45, X.B46, X.B47, X.B48,
                 X.B49, X.B50, X.B51, X.B52, X.B53, X.B54, X.B55, X.B56,
                 X.B57, X.B58, X.B59, X.B60, X.B61, X.B62, X.B63, X.B64)
end function

-- concatenation of sixteen 4-bit vectors to form a 64-bit vector

function MK_64 (V1, V2,  V3,  V4,  V5,  V6,  V7,  V8,
                V9, V10, V11, V12, V13, V14, V15, V16: BIT4) : BIT64 is
   !implementedby "CONCAT_BIT4"
      return MK_64 (V1.B1,  V1.B2,  V1.B3,  V1.B4,
                    V2.B1,  V2.B2,  V2.B3,  V2.B4,
                    V3.B1,  V3.B2,  V3.B3,  V3.B4,
                    V4.B1,  V4.B2,  V4.B3,  V4.B4,
                    V5.B1,  V5.B2,  V5.B3,  V5.B4,
                    V6.B1,  V6.B2,  V6.B3,  V6.B4,
                    V7.B1,  V7.B2,  V7.B3,  V7.B4,
                    V8.B1,  V8.B2,  V8.B3,  V8.B4,
                    V9.B1,  V9.B2,  V9.B3,  V9.B4,
                    V10.B1, V10.B2, V10.B3, V10.B4,
                    V11.B1, V11.B2, V11.B3, V11.B4,
                    V12.B1, V12.B2, V12.B3, V12.B4,
                    V13.B1, V13.B2, V13.B3, V13.B4,
                    V14.B1, V14.B2, V14.B3, V14.B4,
                    V15.B1, V15.B2, V15.B3, V15.B4,
                    V16.B1, V16.B2, V16.B3, V16.B4)
end function

-- concatenation of two 32-bit vectors to form a 64-bit vector

function MK_64 (V1, V2: BIT32) : BIT64 is
   return MK_64 (V1.B1,  V1.B2,  V1.B3,  V1.B4,
                 V1.B5,  V1.B6,  V1.B7,  V1.B8,
                 V1.B9,  V1.B10, V1.B11, V1.B12,
                 V1.B13, V1.B14, V1.B15, V1.B16,
                 V1.B17, V1.B18, V1.B19, V1.B20,
                 V1.B21, V1.B22, V1.B23, V1.B24,
```

```
                  V1.B25, V1.B26, V1.B27, V1.B28,
                  V1.B29, V1.B30, V1.B31, V1.B32,
                  V2.B1,  V2.B2,  V2.B3,  V2.B4,
                  V2.B5,  V2.B6,  V2.B7,  V2.B8,
                  V2.B9,  V2.B10, V2.B11, V2.B12,
                  V2.B13, V2.B14, V2.B15, V2.B16,
                  V2.B17, V2.B18, V2.B19, V2.B20,
                  V2.B21, V2.B22, V2.B23, V2.B24,
                  V2.B25, V2.B26, V2.B27, V2.B28,
                  V2.B29, V2.B30, V2.B31, V2.B32)
end function

end module
```

A.4 Module PERMUTATION_FUNCTIONS

```
module PERMUTATION_FUNCTIONS (TYPES) is

--------------------------------------------------------------------------------
-- E: expansion of a 32-bit vector to a 48-bit vector

function E (X: BIT32) : BIT48 is
   return MK_48 (X.B32, X.B1,  X.B2,  X.B3,  X.B4,  X.B5,
                 X.B4,  X.B5,  X.B6,  X.B7,  X.B8,  X.B9,
                 X.B8,  X.B9,  X.B10, X.B11, X.B12, X.B13,
                 X.B12, X.B13, X.B14, X.B15, X.B16, X.B17,
                 X.B16, X.B17, X.B18, X.B19, X.B20, X.B21,
                 X.B20, X.B21, X.B22, X.B23, X.B24, X.B25,
                 X.B24, X.B25, X.B26, X.B27, X.B28, X.B29,
                 X.B28, X.B29, X.B30, X.B31, X.B32, X.B1)
end function

--------------------------------------------------------------------------------
-- IP: initial permutation

function IP (X: BIT64) : BIT64 is
   return MK_64 (X.B58, X.B50, X.B42, X.B34, X.B26, X.B18, X.B10, X.B2,
                 X.B60, X.B52, X.B44, X.B36, X.B28, X.B20, X.B12, X.B4,
                 X.B62, X.B54, X.B46, X.B38, X.B30, X.B22, X.B14, X.B6,
                 X.B64, X.B56, X.B48, X.B40, X.B32, X.B24, X.B16, X.B8,
                 X.B57, X.B49, X.B41, X.B33, X.B25, X.B17, X.B9,  X.B1,
                 X.B59, X.B51, X.B43, X.B35, X.B27, X.B19, X.B11, X.B3,
                 X.B61, X.B53, X.B45, X.B37, X.B29, X.B21, X.B13, X.B5,
                 X.B63, X.B55, X.B47, X.B39, X.B31, X.B23, X.B15, X.B7)
end function

--------------------------------------------------------------------------------
-- IIP: inverse initial permutation

function IIP (X: BIT64) : BIT64 is
   return MK_64 (X.B40, X.B8,  X.B48, X.B16, X.B56, X.B24, X.B64, X.B32,
                 X.B39, X.B7,  X.B47, X.B15, X.B55, X.B23, X.B63, X.B31,
```

```
                 X.B38, X.B6,  X.B46, X.B14, X.B54, X.B22, X.B62, X.B30,
                 X.B37, X.B5,  X.B45, X.B13, X.B53, X.B21, X.B61, X.B29,
                 X.B36, X.B4,  X.B44, X.B12, X.B52, X.B20, X.B60, X.B28,
                 X.B35, X.B3,  X.B43, X.B11, X.B51, X.B19, X.B59, X.B27,
                 X.B34, X.B2,  X.B42, X.B10, X.B50, X.B18, X.B58, X.B26,
                 X.B33, X.B1,  X.B41, X.B9,  X.B49, X.B17, X.B57, X.B25)
end function

-------------------------------------------------------------------------
-- P: permutation

function P (X: BIT32) : BIT32 is
   return MK_32 (X.B16, X.B7,  X.B20, X.B21,
                 X.B29, X.B12, X.B28, X.B17,
                 X.B1,  X.B15, X.B23, X.B26,
                 X.B5,  X.B18, X.B31, X.B10,
                 X.B2,  X.B8,  X.B24, X.B14,
                 X.B32, X.B27, X.B3,  X.B9,
                 X.B19, X.B13, X.B30, X.B6,
                 X.B22, X.B11, X.B4,  X.B25)
end function

-------------------------------------------------------------------------
-- PC1: permuted choice 1

function PC1 (X: BIT64) : BIT56 is
   return MK_56 (X.B57, X.B49, X.B41, X.B33, X.B25, X.B17, X.B9,
                 X.B1,  X.B58, X.B50, X.B42, X.B34, X.B26, X.B18,
                 X.B10, X.B2,  X.B59, X.B51, X.B43, X.B35, X.B27,
                 X.B19, X.B11, X.B3,  X.B60, X.B52, X.B44, X.B36,

                 X.B63, X.B55, X.B47, X.B39, X.B31, X.B23, X.B15,
                 X.B7,  X.B62, X.B54, X.B46, X.B38, X.B30, X.B22,
                 X.B14, X.B6,  X.B61, X.B53, X.B45, X.B37, X.B29,
                 X.B21, X.B13, X.B5,  X.B28, X.B20, X.B12, X.B4)
end function

-------------------------------------------------------------------------
-- PC2: permuted choice 2

function PC2 (X: BIT56) : BIT48 is
   return MK_48 (X.B14, X.B17, X.B11, X.B24, X.B1,  X.B5,
                 X.B3,  X.B28, X.B15, X.B6,  X.B21, X.B10,
                 X.B23, X.B19, X.B12, X.B4,  X.B26, X.B8,
                 X.B16, X.B7,  X.B27, X.B20, X.B13, X.B2,
                 X.B41, X.B52, X.B31, X.B37, X.B47, X.B55,
                 X.B30, X.B40, X.B51, X.B45, X.B33, X.B48,
                 X.B44, X.B49, X.B39, X.B56, X.B34, X.B53,
                 X.B46, X.B42, X.B50, X.B36, X.B29, X.B32)
end function

end module
```

A.5 Module S_BOX_FUNCTIONS

The LNT model directly encodes the S-box tables as two-dimensional arrays, requiring the definition of the additional data types ROW and S_BOX_ARRAY, together with accessor functions GET_ROW() and GET_COLUMN() and projection functions 1AND6() and 2TO5() (the latter are part of module TYPES (see Appendix A.3).

```
module S_BOX_FUNCTIONS (TYPES) is

-------------------------------------------------------------------------
-- data types defining a two-dimensional array to encode the S-boxes

type ROW is
   array [0..15] of NAT
end type

type S_BOX_ARRAY is
   array [0..3] of ROW
end type

-------------------------------------------------------------------------

function GET_ROW (X: BIT6) : NAT is
   return BIT2_TO_NAT (1AND6 (X))
end function

-------------------------------------------------------------------------

function GET_COLUMN (X: BIT6) : NAT is
   return BIT4_TO_NAT (2TO5 (X))
end function

-------------------------------------------------------------------------

function S1 : S_BOX_ARRAY is
   return S_BOX_ARRAY
     (ROW (14,  4, 13,  1,  2, 15, 11,  8,  3, 10,  6, 12,  5,  9,  0,  7),
      ROW ( 0, 15,  7,  4, 14,  2, 13,  1, 10,  6, 12, 11,  9,  5,  3,  8),
      ROW ( 4,  1, 14,  8, 13,  6,  2, 11, 15, 12,  9,  7,  3, 10,  5,  0),
      ROW (15, 12,  8,  2,  4,  9,  1,  7,  5, 11,  3, 14, 10,  0,  6, 13))
end function

-------------------------------------------------------------------------

function S2 : S_BOX_ARRAY is
   return S_BOX_ARRAY
     (ROW (15,  1,  8, 14,  6, 11,  3,  4,  9,  7,  2, 13, 12,  0,  5, 10),
      ROW ( 3, 13,  4,  7, 15,  2,  8, 14, 12,  0,  1, 10,  6,  9, 11,  5),
      ROW ( 0, 14,  7, 11, 10,  4, 13,  1,  5,  8, 12,  6,  9,  3,  2, 15),
      ROW (13,  8, 10,  1,  3, 15,  4,  2, 11,  6,  7, 12,  0,  5, 14,  9))
end function
```

```
function S3 : S_BOX_ARRAY is
   return S_BOX_ARRAY
     (ROW (10,  0,  9, 14,  6,  3, 15,  5,  1, 13, 12,  7, 11,  4,  2,  8),
      ROW (13,  7,  0,  9,  3,  4,  6, 10,  2,  8,  5, 14, 12, 11, 15,  1),
      ROW (13,  6,  4,  9,  8, 15,  3,  0, 11,  1,  2, 12,  5, 10, 14,  7),
      ROW ( 1, 10, 13,  0,  6,  9,  8,  7,  4, 15, 14,  3, 11,  5,  2, 12))
end function
```

```
function S4 : S_BOX_ARRAY is
   return S_BOX_ARRAY
     (ROW ( 7, 13, 14,  3,  0,  6,  9, 10,  1,  2,  8,  5, 11, 12,  4, 15),
      ROW (13,  8, 11,  5,  6, 15,  0,  3,  4,  7,  2, 12,  1, 10, 14,  9),
      ROW (10,  6,  9,  0, 12, 11,  7, 13, 15,  1,  3, 14,  5,  2,  8,  4),
      ROW ( 3, 15,  0,  6, 10,  1, 13,  8,  9,  4,  5, 11, 12,  7,  2, 14))
end function
```

```
function S5 : S_BOX_ARRAY is
   return S_BOX_ARRAY
     (ROW ( 2, 12,  4,  1,  7, 10, 11,  6,  8,  5,  3, 15, 13,  0, 14,  9),
      ROW (14, 11,  2, 12,  4,  7, 13,  1,  5,  0, 15, 10,  3,  9,  8,  6),
      ROW ( 4,  2,  1, 11, 10, 13,  7,  8, 15,  9, 12,  5,  6,  3,  0, 14),
      ROW (11,  8, 12,  7,  1, 14,  2, 13,  6, 15,  0,  9, 10,  4,  5,  3))
end function
```

```
function S6 : S_BOX_ARRAY is
   return S_BOX_ARRAY
     (ROW (12,  1, 10, 15,  9,  2,  6,  8,  0, 13,  3,  4, 14,  7,  5, 11),
      ROW (10, 15,  4,  2,  7, 12,  9,  5,  6,  1, 13, 14,  0, 11,  3,  8),
      ROW ( 9, 14, 15,  5,  2,  8, 12,  3,  7,  0,  4, 10,  1, 13, 11,  6),
      ROW ( 4,  3,  2, 12,  9,  5, 15, 10, 11, 14,  1,  7,  6,  0,  8, 13))
end function
```

```
function S7 : S_BOX_ARRAY is
   return S_BOX_ARRAY
     (ROW ( 4, 11,  2, 14, 15,  0,  8, 13,  3, 12,  9,  7,  5, 10,  6,  1),
      ROW (13,  0, 11,  7,  4,  9,  1, 10, 14,  3,  5, 12,  2, 15,  8,  6),
      ROW ( 1,  4, 11, 13, 12,  3,  7, 14, 10, 15,  6,  8,  0,  5,  9,  2),
      ROW ( 6, 11, 13,  8,  1,  4, 10,  7,  9,  5,  0, 15, 14,  2,  3, 12))
end function
```

```
function S8 : S_BOX_ARRAY is
   return S_BOX_ARRAY
     (ROW (13,  2,  8,  4,  6, 15, 11,  1, 10,  9,  3, 14,  5,  0, 12,  7),
      ROW ( 1, 15, 13,  8, 10,  3,  7,  4, 12,  5,  6, 11,  0, 14,  9,  2),
      ROW ( 7, 11,  4,  1,  9, 12, 14,  2,  0,  6, 10, 13, 15,  3,  5,  8),
      ROW ( 2,  1, 14,  7,  4, 10,  8, 13, 15, 12,  9,  0,  3,  5,  6, 11))
end function

end module
```

A.6 Module CHANNELS

```
module CHANNELS (TYPES) is

--------------------------------------------------------------------------------
-- channel types for bit vectors

channel C4 is
   (BIT4)
end channel

channel C6 is
   (BIT6)
end channel

channel C32 is
   (BIT32)
end channel

channel C48 is
   (BIT48)
end channel

channel C56 is
   (BIT56)
end channel

channel C64 is
   (BIT64)
end channel

--------------------------------------------------------------------------------
-- channel types for scalar data types

channel CB is
   (BOOL)
end channel

channel CIT is
   (ITERATION)
end channel
```

```
channel CP is
   (PHASE)
end channel

channel CS is
   (SHIFT)
end channel

end module
```

A.7 Module CONTROLLER

```
module CONTROLLER (CHANNELS) is

--------------------------------------------------------------------------------
-- CONTROLLER executes five concurrent processes controlling the various
-- multiplexers and the shift register, which are synchronized via a sixth
-- process counting the iterations

process CONTROLLER [CRYPT: CB,
                    CTRL_CL, CTRL_CR: CP,
                    CTRL_SHIFT: CS, CTRL_DK, CTRL_CK: CP] is
   hide CS: CIT in
      par CS in
         COUNTER [CS]
      ||
         CTRL_MUX_LR [CS, CTRL_CL]
      ||
         CTRL_MUX_LR [CS, CTRL_CR]
      ||
         CTRL_SHIFT [CRYPT, CS, CTRL_SHIFT]
      ||
         CTRL_DMUX_K [CS, CTRL_DK]
      ||
         CTRL_MUX_K [CS, CTRL_CK]
      end par
   end hide
end process

--------------------------------------------------------------------------------
-- COUNTER counts the iterations (modulo 17)

process COUNTER [CS: CIT] is
   var IT: ITERATION in
      IT := 0;
      loop
         CS (IT);
         IT := ITERATION (((NAT (IT) + 1) mod 17))
      end loop
   end var
end process
```

```
-------------------------------------------------------------------------
-- CTRL_MUX_LR generates 1 F, then 15 Ns, and finally 1 L to control the
-- multiplexers in the data path

process CTRL_MUX_LR [CS: CIT, CTRL: CP] is
   var IT: ITERATION in
      loop
         CS (?IT);
         if IT == (0 of ITERATION) then
            CTRL (F)
         elsif IT == last then
            CTRL (L)
         else
            CTRL (N)
         end if
      end loop
   end var
end process

-------------------------------------------------------------------------
-- CTRL_SHIFT controls the shift register

process CTRL_SHIFT [CRYPT: CB, CS: CIT, CTRL: CS] is
   var CRYPT: BOOL, IT: ITERATION in
      loop
         CRYPT (?CRYPT);
         loop LL in
            CS (?IT);
            if IT == last then
               break LL
            elsif CRYPT then
               if (IT == (0 of ITERATION)) or (IT == (1 of ITERATION)) or
                  (IT == (8 of ITERATION)) or (IT == (15 of ITERATION))
               then
                  CTRL (LS1)
               else
                  CTRL (LS2)
               end if
            else
               if IT == (0 of ITERATION) then
                  CTRL (NO)
               elsif (IT == (1 of ITERATION)) or
                     (IT == (8 of ITERATION)) or
                     (IT == (15 of ITERATION))
               then
                  CTRL (RS1)
               else
                  CTRL (RS2)
               end if
            end if
         end loop
```

```
      end loop
   end var
end process

-------------------------------------------------------------------------
-- CTRL_DMUX_K generates 15 Ns and 1 L to control the doubling multiplexer

process CTRL_DMUX_K [CS: CIT, CTRL: CP] is
   var IT: ITERATION in
      loop
         CS (?IT);
         if IT == (15 of ITERATION) then
            CTRL (L)
         elsif IT != last then
            CTRL (N)
         end if
      end loop
   end var
end process

-------------------------------------------------------------------------
-- CTRL_MUX_K generates 1 F and 15 Ns to control the key path multiplexer

process CTRL_MUX_K [CS: CIT, CTRL: CP] is
   var IT: ITERATION in
      loop
         CS (?IT);
         if IT == (0 of ITERATION) then
            CTRL (F)
         elsif IT != last then
            CTRL (N)
         end if
      end loop
   end var
end process

end module
```

A.8 Module KEY_PATH

```
module KEY_PATH (CHANNELS) is

-------------------------------------------------------------------------
-- KEY_PATH generates the 16 subkeys of the key schedule

process KEY_PATH [KEY: C64, SUBKEY: C48,
                  CTRL_SHIFT: CS, CTRL_DK, CTRL_CK: CP] is
   hide FIRST_K, INTERMEDIATE_K: C56 in
      par
         FIRST_K ->
            PC1 [KEY, FIRST_K]
      ||
```

```
         FIRST_K, INTERMEDIATE_K ->
            hide K, KKK, SK: C56 in
               par
                  K, SK ->
                     SHIFT_REGISTER [CTRL_SHIFT, K, SK]
               ||
                  SK, KKK ->
                     DUPLICATE_K [CTRL_DK, SK, INTERMEDIATE_K, KKK]
               ||
                  KKK, K ->
                     CHOOSE_K [CTRL_CK, FIRST_K, KKK, K]
               end par
            end hide
      ||
         INTERMEDIATE_K ->
            PC2 [INTERMEDIATE_K, SUBKEY]
      end par
   end hide
end process

-------------------------------------------------------------------------
-- PC1 applies PC1 to select a 56-bit vector from the initial 64-bit key

process PC1 [KEY: C64, FIRST_K: C56] is
   var K64: BIT64 in
      loop
         KEY (?K64);
         FIRST_K (PC1 (K64))
      end loop
   end var
end process

-------------------------------------------------------------------------
-- SHIFT_REGISTER performs, depending on the iteration, one or two shifts
-- to the left or right of a 56-bit word

process SHIFT_REGISTER [CTRL: CS, INPUT, OUTPUT: C56] is
   var CTRL: SHIFT, I56: BIT56 in
      loop
         par
            CTRL (?CTRL)
         ||
            INPUT (?I56)
         end par;
         case CTRL in
           NO ->
               OUTPUT (I56)
         | LS1 ->
               OUTPUT (LSHIFT (I56))
         | LS2 ->
               OUTPUT (LSHIFT (LSHIFT (I56)))
         | RS1 ->
```

```
                OUTPUT (RSHIFT (I56))
            | RS2 ->
                OUTPUT (RSHIFT (RSHIFT (I56)))
            end case
        end loop
    end var
end process

-------------------------------------------------------------------------
-- DUPLICATE_K reads a 56-bit vector from INPUT and outputs it to OUTPUT1
-- and OUTPUT2, but for the last iteration, where it outputs only to
-- OUTPUT1. Because DUPLICATE_K always reads from INPUT, the order of the
-- rendezvous on CTRL and INPUT is arbitrary.

process DUPLICATE_K [CTRL: CP, INPUT, OUTPUT1, OUTPUT2: C56] is
    var CTRL: PHASE, I56:BIT56 in
        loop
            par
                CTRL (?CTRL)
            ||
                INPUT (?I56)
            end par;
            if CTRL == L then
                OUTPUT1 (I56)
            else -- assert (CTRL == N)
                par
                    OUTPUT1 (I56)
                ||
                    OUTPUT2 (I56)
                end par
            end if
        end loop
    end var
end process

-------------------------------------------------------------------------
-- CHOOSE_K closes the loop in the key path, by redirecting the input on
-- INPUT to OUTPUT, but for the first iteration where the original key is
-- read on FIRST_IN

process CHOOSE_K [CTRL: CP, FIRST_IN, INPUT, OUTPUT: C56] is
    var CTRL: PHASE, I56:BIT56 in
        loop
            CTRL (?CTRL);
            if CTRL == F then
                FIRST_IN (?I56)
            else -- assert (CTRL == N)
                INPUT (?I56)
            end if;
            OUTPUT (I56)
        end loop
    end var
```

```
end process

-------------------------------------------------------------------------
-- PC2 applies PC2 to generate the current subkey

process PC2 [KK: C56, SUBKEY: C48] is
   var I56: BIT56 in
      loop
         KK (?I56);
         SUBKEY (PC2 (I56))
      end loop
   end var
end process

end module
```

A.9 Module DATA_PATH

```
module DATA_PATH (PERMUTATION_FUNCTIONS, CIPHER) is

-- DATA_PATH performs the 16 iterations ciphering DATA with the subkeys
-- read on gate SUBKEY

process DATA_PATH [DATA, OUTPUT: C64, SUBKEY: C48, CTRL_CL, CTRL_CR: CP] is
   hide FIRST_L, FIRST_R, OUTPUT_L, OUTPUT_R: C32 in
      par
         FIRST_L, FIRST_R ->
            IP [DATA, FIRST_L, FIRST_R]
      ||
         FIRST_L, FIRST_R, OUTPUT_L, OUTPUT_R ->
            hide CL_XR, CR_FX, FX_XR, XR_CR, CR_CL: C32 in
               par
                  CR_CL, CL_XR ->
                     CHOOSE_L [CTRL_CL, FIRST_L, CR_CL, CL_XR, OUTPUT_L]
               ||
                  XR_CR, CR_CL, CR_FX ->
                     CHOOSE_R [CTRL_CR, FIRST_R, XR_CR, CR_CL, CR_FX,
                               OUTPUT_R]
               ||
                  CR_FX, FX_XR ->
                     CIPHER [SUBKEY, CR_FX, FX_XR]
               ||
                  CL_XR, FX_XR, XR_CR ->
                     XOR_32 [CL_XR, FX_XR, XR_CR]
               end par
            end hide
      ||
         OUTPUT_L, OUTPUT_R ->
            IIP [OUTPUT_L, OUTPUT_R, OUTPUT]
      end par
   end hide
end process
```

```
-------------------------------------------------------------------------
-- IP applies the initial permutation IP to the initial 64-bit vector
-- received on gate DATA and breaks the resulting 64-bit vector into
-- two 32-bit vectors L and R

process IP [DATA: C64, FIRST_L, FIRST_R: C32] is
   var I64: BIT64 in
      loop
         DATA (?I64);
         I64 := IP (I64);
         par
            FIRST_L (1TO32 (I64))
            ||
            FIRST_R (33TO64 (I64))
         end par
      end loop
   end var
end process

-------------------------------------------------------------------------
-- CHOOSE_L reads a 32-bit vector from INPUT and outputs to OUTPUT, but for
-- the first iteration, where it reads from FIRST_IN, and the last
-- iteration, where it outputs to LAST_OUT

process CHOOSE_L [CTRL: CP, FIRST_IN, INPUT, OUTPUT, LAST_OUT: C32] is
   var CTRL: PHASE, L32: BIT32 in
      loop
         CTRL (?CTRL);
         case CTRL in
           F ->
                FIRST_IN (?L32);
                OUTPUT (L32)
         | N ->
                INPUT (?L32);
                OUTPUT (L32)
         | L ->
                INPUT (?L32);
                LAST_OUT (L32)
         end case
      end loop
   end var
end process

-------------------------------------------------------------------------
-- CHOOSE_R reads a 32-bit vector from INPUT and outputs to OUT1 and OUT2,
-- but for the first iteration, where it reads from FIRST_IN, and the last
-- one, where it outputs to LAST_OUT

process CHOOSE_R [CTRL: CP, FIRST_IN, INPUT, OUT1, OUT2, LAST_OUT: C32] is
   var CTRL: PHASE, R32: BIT32 in
      loop
```

```
        CTRL (?CTRL);
        case CTRL in
          F ->
               FIRST_IN (?R32);
               par
                  OUT1 (R32)
               ||
                  OUT2 (R32)
               end par
        | N ->
               INPUT (?R32);
               par
                  OUT1 (R32)
               ||
                  OUT2 (R32)
               end par
        | L ->
               INPUT (?R32);
               LAST_OUT (R32)
        end case
     end loop
  end var
end process
```

```
-- XOR_32 asynchronously reads two 32-bit vectors and outputs their bitwise
-- sum

process XOR_32 [A, B, R: C32] is
   var A32, B32: BIT32 in
      loop
         par
            A (?A32)
         ||
            B (?B32)
         end par;
         R (XOR (A32, B32))
      end loop
   end var
end process
```

```
-- IIP assembles the two 32-bit vectors computed by the algorithm to a
-- 64-bit vector and applies the inverse initial permutation IIP to compute
-- the final result

process IIP [OUTPUT_L, OUTPUT_R: C32, OUTPUT: C64] is
   var OL, OH: BIT32 in
      loop
         par
            OUTPUT_L (?OL)
         ||
```

```
            OUTPUT_R (?OH)
         end par;
         OUTPUT (IIP (MK_64 (OH, OL)))
      end loop
   end var
end process

end module
```

A.10 Module CIPHER

```
module CIPHER (CHANNELS, S_BOX_FUNCTIONS) is

-- processes implementing the cipher function according to Fig. 2 of [DES]

-------------------------------------------------------------------------
-- CIPHER computes "F (R, K) = P (Si (E (R) + K))"

process CIPHER [K: C48, R, PX: C32] is
   hide ER: C48,
        IS1, IS2, IS3, IS4, IS5, IS6, IS7, IS8: C6,
        SO1, SO2, SO3, SO4, SO5, SO6, SO7, SO8: C4
   in
      par
         ER ->
            E [R, ER]
      ||
         ER, IS1, IS2, IS3, IS4, IS5, IS6, IS7, IS8 ->
            XOR_48 [ER, K, IS1, IS2, IS3, IS4, IS5, IS6, IS7, IS8]
      ||
         IS1, IS2, IS3, IS4, IS5, IS6, IS7, IS8,
         SO1, SO2, SO3, SO4, SO5, SO6, SO7, SO8 ->
            par
               S1 [IS1, SO1]
            ||
               S2 [IS2, SO2]
            ||
               S3 [IS3, SO3]
            ||
               S4 [IS4, SO4]
            ||
               S5 [IS5, SO5]
            ||
               S6 [IS6, SO6]
            ||
               S7 [IS7, SO7]
            ||
               S8 [IS8, SO8]
            end par
      ||
         SO1, SO2, SO3, SO4, SO5, SO6, SO7, SO8 ->
            P [SO1, SO2, SO3, SO4, SO5, SO6, SO7, SO8, PX]
```

```
      end par
   end hide
end process

-------------------------------------------------------------------------
-- E expands a 32-bit word to a 48-bit word using function E

process E [INPUT: C32, OUTPUT: C48] is
   var I32: BIT32 in
      loop
         INPUT (?I32);
         OUTPUT (E(I32))
      end loop
   end var
end process

-------------------------------------------------------------------------
-- XOR_48 asynchronously reads two 48-bit vectors and output their bitwise
-- sum, splitted into eight 6-bit vectors

process XOR_48 [A, B: C48, R1, R2, R3, R4, R5, R6, R7, R8: C6] is
   var A48, B48, I48: BIT48 in
      loop
         par
            A (?A48)
         ||
            B (?B48)
         end par;
         I48 := XOR (A48, B48);
         par
            R1 (1TO6   (I48))
           ||
            R2 (7TO12  (I48))
           ||
            R3 (13TO18 (I48))
           ||
            R4 (19TO24 (I48))
           ||
            R5 (25TO30 (I48))
           ||
            R6 (31TO36 (I48))
           ||
            R7 (37TO42 (I48))
           ||
            R8 (43TO48 (I48))
         end par
      end loop
   end var
end process

-------------------------------------------------------------------------
```

```
process S1 [INPUT: C6, OUTPUT: C4] is
   var I6: BIT6 in
      loop
         INPUT (?I6);
         OUTPUT (NAT_TO_BIT4 (S1[GET_ROW (I6)][GET_COLUMN (I6)]))
      end loop
   end var
end process
```

```
process S2 [INPUT: C6, OUTPUT: C4] is
   var I6: BIT6 in
      loop
         INPUT (?I6);
         OUTPUT (NAT_TO_BIT4 (S2[GET_ROW (I6)][GET_COLUMN (I6)]))
      end loop
   end var
end process
```

```
process S3 [INPUT: C6, OUTPUT: C4] is
   var I6: BIT6 in
      loop
         INPUT (?I6);
         OUTPUT (NAT_TO_BIT4 (S3[GET_ROW (I6)][GET_COLUMN (I6)]))
      end loop
   end var
end process
```

```
process S4 [INPUT: C6, OUTPUT: C4] is
   var I6: BIT6 in
      loop
         INPUT (?I6);
         OUTPUT (NAT_TO_BIT4 (S4[GET_ROW (I6)][GET_COLUMN (I6)]))
      end loop
   end var
end process
```

```
process S5 [INPUT: C6, OUTPUT: C4] is
   var I6: BIT6 in
      loop
         INPUT (?I6);
         OUTPUT (NAT_TO_BIT4 (S5[GET_ROW (I6)][GET_COLUMN (I6)]))
      end loop
   end var
end process
```

```
process S6 [INPUT: C6, OUTPUT: C4] is
   var I6: BIT6 in
      loop
         INPUT (?I6);
         OUTPUT (NAT_TO_BIT4 (S6[GET_ROW (I6)][GET_COLUMN (I6)]))
      end loop
   end var
end process
```

```
process S7 [INPUT: C6, OUTPUT: C4] is
   var I6: BIT6 in
      loop
         INPUT (?I6);
         OUTPUT (NAT_TO_BIT4 (S7[GET_ROW (I6)][GET_COLUMN (I6)]))
      end loop
   end var
end process
```

```
process S8 [INPUT: C6, OUTPUT: C4] is
   var I6: BIT6 in
      loop
         INPUT (?I6);
         OUTPUT (NAT_TO_BIT4 (S8[GET_ROW (I6)][GET_COLUMN (I6)]))
      end loop
   end var
end process
```

```
-- P collects the results of the eight processes S_BOX_i (on INi) and
-- outputs them in a single transition exit; the permutation P is applied
-- in a second step when outputting the result on OUTPUT.

process P [IN1, IN2, IN3, IN4, IN5, IN6, IN7, IN8: C4, OUTPUT: C32] is
   var I1, I2, I3, I4, I5, I6, I7, I8: BIT4 in
      loop
         par
            IN1 (?I1)
         ||
            IN2 (?I2)
         ||
            IN3 (?I3)
         ||
            IN4 (?I4)
         ||
            IN5 (?I5)
```

```
         ||
            IN6 (?I6)
         ||
            IN7 (?I7)
         ||
            IN8 (?I8)
         end par;
         OUTPUT (P (MK_32 (I1, I2, I3, I4, I5, I6, I7, I8)))
      end loop
   end var
end process

end module
```

A.11 Module DES

The module DES.lnt defines the architecture of the asynchronous DES together with the principal process MAIN instantiating process DES.

```
module DES (CONTROLLER, DATA_PATH, KEY_PATH) is

process DES [CRYPT: CB, KEY, DATA, OUTPUT: C64] is
   hide SUBKEY: C48,
        CTRL_CL, CTRL_CR: CP,
        CTRL_SHIFT: CS, CTRL_DK, CTRL_CK: CP
   in
      par
         SUBKEY, CTRL_CL, CTRL_CR ->
            DATA_PATH [DATA, OUTPUT, SUBKEY, CTRL_CL, CTRL_CR]
      ||
         SUBKEY, CTRL_CK, CTRL_SHIFT, CTRL_DK ->
            KEY_PATH [KEY, SUBKEY, CTRL_SHIFT, CTRL_DK, CTRL_CK]
      ||
         CTRL_CL, CTRL_CR, CTRL_CK, CTRL_SHIFT, CTRL_DK ->
            CONTROLLER [CRYPT, CTRL_CL, CTRL_CR, CTRL_SHIFT, CTRL_DK,
            CTRL_CK]
      end par
   end hide
end process

---------------------------------------------------------------------------

process MAIN [CRYPT: CB, KEY, DATA, OUTPUT: C64] is
   DES [CRYPT, KEY, DATA, OUTPUT]
end process

end module
```

A.12 Model with Concrete Bits and Environment: DES_SAMPLE

This model instantiates the DES in a sequential environment providing input data and checking the output. Hence, this model can be used to directly (i.e., non compositionally) generate an LTS for the

concrete (and thus also the abstract) model. After hiding all offers and minimization for branching bisimulation, the generated LTS is the one shown in Figure 2.

```
module DES_SAMPLE (DES) is

-- DES_SAMPLE uses concrete bits

process MAIN_SAMPLE [CRYPT: CB, KEY, DATA, OUTPUT: C64] is
   par CRYPT, KEY, DATA, OUTPUT in
      DES [CRYPT, KEY, DATA, OUTPUT]
   ||
      ENVIRONMENT [CRYPT, KEY, DATA, OUTPUT]
   end par
end process

-------------------------------------------------------------------------
-- 64-bit constant frequently used as example for a key

function c_13345779_9BBCDFF1 : BIT64 is
   return MK_64 (0, 0, 0, 1,  0, 0, 1, 1,  0, 0, 1, 1,  0, 1, 0, 0,
                 0, 1, 0, 1,  0, 1, 1, 1,  0, 1, 1, 1,  1, 0, 0, 1,
                 1, 0, 0, 1,  1, 0, 1, 1,  1, 0, 1, 1,  1, 1, 0, 0,
                 1, 1, 0, 1,  1, 1, 1, 1,  1, 1, 1, 1,  0, 0, 0, 1)
end function

-------------------------------------------------------------------------
-- 64-bit constant frequently used as example data

function C_01234567_89ABCDEF : BIT64 is
   return MK_64 (0, 0, 0, 0,  0, 0, 0, 1,  0, 0, 1, 0,  0, 0, 1, 1,
                 0, 1, 0, 0,  0, 1, 0, 1,  0, 1, 1, 0,  0, 1, 1, 1,
                 1, 0, 0, 0,  1, 0, 0, 1,  1, 0, 1, 0,  1, 0, 1, 1,
                 1, 1, 0, 0,  1, 1, 0, 1,  1, 1, 1, 0,  1, 1, 1, 1)
end function

-------------------------------------------------------------------------
-- result of ciphering C_01234567_89ABCDEF with C_13345779_9BBCDFF1

function C_85E81354_0F0AB405 : BIT64 is
   return MK_64 (1, 0, 0, 0,  0, 1, 0, 1,  1, 1, 1, 0,  1, 0, 0, 0,
                 0, 0, 0, 1,  0, 0, 1, 1,  0, 1, 0, 1,  0, 1, 0, 0,
                 0, 0, 0, 0,  1, 1, 1, 1,  0, 0, 0, 0,  1, 0, 1, 0,
                 1, 0, 1, 1,  0, 1, 0, 0,  0, 0, 0, 0,  0, 1, 0, 1)
end function

-------------------------------------------------------------------------
-- process simulating the environment in order to close the system,
-- executing a single encryption of c_01234567_89abcdef with
-- c_13345779_9BBCDFF1

process ENVIRONMENT [CRYPT: CB, KEY, DATA, OUTPUT: C64] is
   CRYPT (true);
```

```
   KEY (c_13345779_9BBCDFF1);
   DATA (c_01234567_89abcdef);
   -- cipher of c_01234567_89abcdef with c_13345779_9BBCDFF1
   OUTPUT (c_85e81354_0f0ab405);
   stop
end process

end module
```

A.13 Module PROPERTY_4

```
module property_4 is

-------------------------------------------------------------------------
-- synchronization channel without any offer

channel none is
   ()
end channel

-------------------------------------------------------------------------
-- process describing a loop starting with a synchronization on gate CRYPT,
-- followed by 16 synchronization on gate SUBKEY, where the synchronization
-- on CRYPT corresponding to the next iteration can already appear after
-- 14 synchronizations on SUBKEY.
-- this process is used to verify the presence of 16 iterations in the DES.

process MAIN [CRYPT, SUBKEY: none] is
   CRYPT;
   loop
      var IT: NAT in
         for IT := 0 while IT < 14 by IT := IT + 1 loop
            SUBKEY
         end loop
      end var;
      par
         SUBKEY; SUBKEY
      ||
         CRYPT
      end par
   end loop
end process

end module
```

B LOTOS Specification of an Asynchronous DES

This appendix gives the complete LOTOS models of the DES, as required by the SVL verification scenario given in Appendix D. For an introduction to LOTOS, its syntax and semantics, see the international

standard [12] or one of the tutorials listed on the CADP website[12]. In the sequel, a LOTOS model is called a "specification", in conformance with the terminology of the LOTOS standard.

B.1 Library BIT_CONCRETE

The definition of type BIT by library BIT_CONCRETEis not strictly necessary, because one could use the library BIT provided with the CADP toolbox, which defines many more operations than just xor. Thus, the library BIT_CONCRETE is included here for better comparison with its abstract version (see Appendix B.2 below).

```
type BIT is BOOLEAN
   sorts BIT
   opns 0 (*! implementedby BIT_ZERO constructor *) : -> BIT
        1 (*! implementedby BIT_ONE  constructor *) : -> BIT
endtype
```

B.2 Library BIT_ABSTRACT

This library is a replacement of the type BIT, transforming the two-valued type into a singleton, which transitively transforms all bit vectors into singletons as well, thus completely abstracting data.

```
type BIT is BOOLEAN
   sorts BIT
   opns 0 (*! constructor *) : -> BIT
        1 : -> BIT
   eqns
      ofsort BIT
         1 = 0;
endtype
```

B.3 Library TYPES

This library defines several data types modeling different sizes of bit vectors and types required for the control of the DES.

```
(* ------------------------------------------------------------------------ *)
(* exclusive-or operation on (abstract or concrete) bits *)

type EXTENDED_BIT is BIT
   opns _xor_ : BIT, BIT -> BIT
   eqns
      forall B1, B2 : BIT
      ofsort BIT
         B1 xor B1 = 0;
         B1 xor B2 = 1; (* assuming decreasing priority among equations *)
endtype

(* ------------------------------------------------------------------------ *)
```

[12] http://cadp.inria.fr/tutorial/#lotos

```
(* data types for counting the iterations of the algorithm *)

type ITERATION_AS_RENAMED_NAT is NATURAL renamedby
   sortnames ITERATION for NAT
endtype

type ITERATION is BOOLEAN, ITERATION_AS_RENAMED_NAT
   opns 15   : -> ITERATION
        16   : -> ITERATION
        17   : -> ITERATION
        NEXT : ITERATION -> ITERATION
        LAST : ITERATION -> BOOL
   eqns
      forall IT : ITERATION
      ofsort ITERATION
         15 = Succ (Succ (Succ (Succ (Succ (Succ (9))))));
         16 = Succ (15);
         17 = Succ (16);
      ofsort ITERATION
         NEXT (IT) = (IT + 1) mod 17;
      ofsort BOOL
         LAST (IT) = IT == 16;
endtype

(* ------------------------------------------------------------------------ *)
(* data type for the control signals used for the multiplexers *)

type PHASE is BOOLEAN, ITERATION
   sorts PHASE
   opns F (*! constructor *) : -> PHASE (* first iteration *)
        N (*! constructor *) : -> PHASE (* intermediate iteration *)
        L (*! constructor *) : -> PHASE (* last iteration *)
        _==_ : PHASE, PHASE -> BOOL
        MUX_DATA : ITERATION -> PHASE
        MUX_K    : ITERATION -> PHASE
        DMUX_K   : ITERATION -> PHASE
   eqns
      forall IT : ITERATION,
             P, P1, P2 : PHASE
      ofsort BOOL
         F  == F  = true;
         N  == N  = true;
         L  == L  = true;
         P1 == P2 = false;
      ofsort PHASE
         MUX_DATA (0)  = F;
         (IT == 16) => MUX_DATA (IT) = L;
         MUX_DATA (IT) = N;
      ofsort PHASE
         MUX_K (0)  = F;
         MUX_K (IT) = N;
      ofsort PHASE
```

```
        (IT == 15) => DMUX_K (IT) = L;
        DMUX_K (IT) = N;
endtype

(* ------------------------------------------------------------------------ *)
(* data type for the controlling the behavior of the shift register *)

type SHIFT is BOOLEAN, ITERATION
   sorts SHIFT
   opns NO  (*! constructor *) : -> SHIFT (* no shift *)
        LS1 (*! constructor *) : -> SHIFT (* 1 left shift *)
        LS2 (*! constructor *) : -> SHIFT (* 2 left shifts *)
        RS1 (*! constructor *) : -> SHIFT (* 1 right shift *)
        RS2 (*! constructor *) : -> SHIFT (* 2 right shifts *)
        _==_ : SHIFT, SHIFT -> BOOL
        SHIFT_CODE : ITERATION, BOOL -> SHIFT
   eqns
      forall IT : ITERATION,
             S, S1, S2 : SHIFT
      ofsort BOOL
         NO  == NO  = true;
         LS1 == LS1 = true;
         LS2 == LS2 = true;
         RS1 == RS1 = true;
         RS2 == RS2 = true;
         S1  == S2  = false;
      ofsort SHIFT
         (IT == 0)  => SHIFT_CODE (IT, false) = NO;
         (IT == 1)  => SHIFT_CODE (IT, false) = RS1;
         (IT == 8)  => SHIFT_CODE (IT, false) = RS1;
         (IT == 15) => SHIFT_CODE (IT, false) = RS1;
         SHIFT_CODE (IT, false) = RS2;
         (IT == 0)  => SHIFT_CODE (IT, true) = LS1;
         (IT == 1)  => SHIFT_CODE (IT, true) = LS1;
         (IT == 8)  => SHIFT_CODE (IT, true) = LS1;
         (IT == 15) => SHIFT_CODE (IT, true) = LS1;
         SHIFT_CODE (IT, true) = LS2;
endtype

(* ------------------------------------------------------------------------ *)
(* data type for 4-bit vectors *)

type BIT4 is EXTENDED_BIT
   sorts BIT4 (*! implementedby ADT_BIT4 *)
   opns
      MK_4 (*! implementedby MK_4 constructor *) :
         BIT, BIT, BIT, BIT -> BIT4
endtype

(* ------------------------------------------------------------------------ *)
(* data type for 6-bit vectors *)
```

```
type BIT6 is EXTENDED_BIT
   sorts BIT6
   opns
      MK_6 (*! constructor *) : BIT, BIT, BIT, BIT, BIT, BIT -> BIT6
endtype

(* ------------------------------------------------------------------------ *)
(* data type for 32-bit vectors *)

type BIT32 is EXTENDED_BIT, BIT4
   sorts BIT32
   opns
      MK_32 (*! constructor *) : BIT, BIT, BIT, BIT, BIT, BIT, BIT, BIT,
                                  BIT, BIT, BIT, BIT, BIT, BIT, BIT, BIT,
                                  BIT, BIT, BIT, BIT, BIT, BIT, BIT, BIT,
                                  BIT, BIT, BIT, BIT, BIT, BIT, BIT, BIT
                                  -> BIT32
      (* bitwise xor *)
      XOR : BIT32, BIT32 -> BIT32
      (* concatenation of eight 4-bit vectors to form a 32-bit vector *)
      MK_32 : BIT4, BIT4, BIT4, BIT4, BIT4, BIT4, BIT4, BIT4 -> BIT32
   eqns
      forall A1,  A2,  A3,  A4,  A5,  A6,  A7,  A8,
             A9,  A10, A11, A12, A13, A14, A15, A16,
             A17, A18, A19, A20, A21, A22, A23, A24,
             A25, A26, A27, A28, A29, A30, A31, A32,
             B1,  B2,  B3,  B4,  B5,  B6,  B7,  B8,
             B9,  B10, B11, B12, B13, B14, B15, B16,
             B17, B18, B19, B20, B21, B22, B23, B24,
             B25, B26, B27, B28, B29, B30, B31, B32: BIT
      ofsort BIT32
         XOR (MK_32 (A1,  A2,  A3,  A4,  A5,  A6,  A7,  A8,
                     A9,  A10, A11, A12, A13, A14, A15, A16,
                     A17, A18, A19, A20, A21, A22, A23, A24,
                     A25, A26, A27, A28, A29, A30, A31, A32),
              MK_32 (B1,  B2,  B3,  B4,  B5,  B6,  B7,  B8,
                     B9,  B10, B11, B12, B13, B14, B15, B16,
                     B17, B18, B19, B20, B21, B22, B23, B24,
                     B25, B26, B27, B28, B29, B30, B31, B32)) =
         MK_32 (A1  xor B1,  A2  xor B2,  A3  xor B3,  A4  xor B4,
                A5  xor B5,  A6  xor B6,  A7  xor B7,  A8  xor B8,
                A9  xor B9,  A10 xor B10, A11 xor B11, A12 xor B12,
                A13 xor B13, A14 xor B14, A15 xor B15, A16 xor B16,
                A17 xor B17, A18 xor B18, A19 xor B19, A20 xor B20,
                A21 xor B21, A22 xor B22, A23 xor B23, A24 xor B24,
                A25 xor B25, A26 xor B26, A27 xor B27, A28 xor B28,
                A29 xor B29, A30 xor B30, A31 xor B31, A32 xor B32);
      ofsort BIT32
         MK_32 (MK_4 (B1,  B2,  B3,  B4),   MK_4 (B5,  B6,  B7,  B8),
                MK_4 (B9,  B10, B11, B12),  MK_4 (B13, B14, B15, B16),
                MK_4 (B17, B18, B19, B20),  MK_4 (B21, B22, B23, B24),
                MK_4 (B25, B26, B27, B28),  MK_4 (B29, B30, B31, B32)) =
```

```
        MK_32 (B1,  B2,  B3,  B4,  B5,  B6,  B7,  B8,
               B9,  B10, B11, B12, B13, B14, B15, B16,
               B17, B18, B19, B20, B21, B22, B23, B24,
               B25, B26, B27, B28, B29, B30, B31, B32);
endtype

(* ------------------------------------------------------------------------ *)
(* data type for 48-bit vectors *)

type BIT48 is EXTENDED_BIT, BIT6
   sorts BIT48
   opns
      MK_48 (*! constructor *) : BIT, BIT, BIT, BIT, BIT, BIT, BIT, BIT,
                                  BIT, BIT, BIT, BIT, BIT, BIT, BIT, BIT,
                                  BIT, BIT, BIT, BIT, BIT, BIT, BIT, BIT,
                                  BIT, BIT, BIT, BIT, BIT, BIT, BIT, BIT,
                                  BIT, BIT, BIT, BIT, BIT, BIT, BIT, BIT,
                                  BIT, BIT, BIT, BIT, BIT, BIT, BIT, BIT
                                  -> BIT48
      (* bitwise xor *)
      XOR : BIT48, BIT48 -> BIT48
      (* eight projection functions from 48-bit vectors to 6-bit vectors *)
       1TO6  : BIT48 -> BIT6
       7TO12 : BIT48 -> BIT6
      13TO18 : BIT48 -> BIT6
      19TO24 : BIT48 -> BIT6
      25TO30 : BIT48 -> BIT6
      31TO36 : BIT48 -> BIT6
      37TO42 : BIT48 -> BIT6
      43TO48 : BIT48 -> BIT6
   eqns
      forall A1,  A2,  A3,  A4,  A5,  A6,  A7,  A8,
             A9,  A10, A11, A12, A13, A14, A15, A16,
             A17, A18, A19, A20, A21, A22, A23, A24,
             A25, A26, A27, A28, A29, A30, A31, A32,
             A33, A34, A35, A36, A37, A38, A39, A40,
             A41, A42, A43, A44, A45, A46, A47, A48,
             B1,  B2,  B3,  B4,  B5,  B6,  B7,  B8,
             B9,  B10, B11, B12, B13, B14, B15, B16,
             B17, B18, B19, B20, B21, B22, B23, B24,
             B25, B26, B27, B28, B29, B30, B31, B32,
             B33, B34, B35, B36, B37, B38, B39, B40,
             B41, B42, B43, B44, B45, B46, B47, B48: BIT
      ofsort BIT48
         XOR (MK_48 (A1,  A2,  A3,  A4,  A5,  A6,  A7,  A8,
                     A9,  A10, A11, A12, A13, A14, A15, A16,
                     A17, A18, A19, A20, A21, A22, A23, A24,
                     A25, A26, A27, A28, A29, A30, A31, A32,
                     A33, A34, A35, A36, A37, A38, A39, A40,
                     A41, A42, A43, A44, A45, A46, A47, A48),
              MK_48 (B1,  B2,  B3,  B4,  B5,  B6,  B7,  B8,
                     B9,  B10, B11, B12, B13, B14, B15, B16,
```

```
                B17, B18, B19, B20, B21, B22, B23, B24,
                B25, B26, B27, B28, B29, B30, B31, B32,
                B33, B34, B35, B36, B37, B38, B39, B40,
                B41, B42, B43, B44, B45, B46, B47, B48)) =
   MK_48 (A1  xor B1,  A2  xor B2,  A3  xor B3,  A4 xor B4,
          A5  xor B5,  A6  xor B6,  A7  xor B7,  A8 xor B8,
          A9  xor B9,  A10 xor B10, A11 xor B11, A12 xor B12,
          A13 xor B13, A14 xor B14, A15 xor B15, A16 xor B16,
          A17 xor B17, A18 xor B18, A19 xor B19, A20 xor B20,
          A21 xor B21, A22 xor B22, A23 xor B23, A24 xor B24,
          A25 xor B25, A26 xor B26, A27 xor B27, A28 xor B28,
          A29 xor B29, A30 xor B30, A31 xor B31, A32 xor B32,
          A33 xor B33, A34 xor B34, A35 xor B35, A36 xor B36,
          A37 xor B37, A38 xor B38, A39 xor B39, A40 xor B40,
          A41 xor B41, A42 xor B42, A43 xor B43, A44 xor B44,
          A45 xor B45, A46 xor B46, A47 xor B47, A48 xor B48);
ofsort BIT6
   1TO6   (MK_48 (B1,  B2,  B3,  B4,  B5,  B6,  B7,  B8,
                  B9,  B10, B11, B12, B13, B14, B15, B16,
                  B17, B18, B19, B20, B21, B22, B23, B24,
                  B25, B26, B27, B28, B29, B30, B31, B32,
                  B33, B34, B35, B36, B37, B38, B39, B40,
                  B41, B42, B43, B44, B45, B46, B47, B48)) =
   MK_6 (B1, B2, B3, B4, B5, B6);
ofsort BIT6
   7TO12  (MK_48 (B1,  B2,  B3,  B4,  B5,  B6,  B7,  B8,
                  B9,  B10, B11, B12, B13, B14, B15, B16,
                  B17, B18, B19, B20, B21, B22, B23, B24,
                  B25, B26, B27, B28, B29, B30, B31, B32,
                  B33, B34, B35, B36, B37, B38, B39, B40,
                  B41, B42, B43, B44, B45, B46, B47, B48)) =
   MK_6 (B7, B8, B9, B10, B11, B12);
ofsort BIT6
   13TO18 (MK_48 (B1,  B2,  B3,  B4,  B5,  B6,  B7,  B8,
                  B9,  B10, B11, B12, B13, B14, B15, B16,
                  B17, B18, B19, B20, B21, B22, B23, B24,
                  B25, B26, B27, B28, B29, B30, B31, B32,
                  B33, B34, B35, B36, B37, B38, B39, B40,
                  B41, B42, B43, B44, B45, B46, B47, B48)) =
   MK_6 (B13, B14, B15, B16, B17, B18);
ofsort BIT6
   19TO24 (MK_48 (B1,  B2,  B3,  B4,  B5,  B6,  B7,  B8,
                  B9,  B10, B11, B12, B13, B14, B15, B16,
                  B17, B18, B19, B20, B21, B22, B23, B24,
                  B25, B26, B27, B28, B29, B30, B31, B32,
                  B33, B34, B35, B36, B37, B38, B39, B40,
                  B41, B42, B43, B44, B45, B46, B47, B48)) =
   MK_6 (B19, B20, B21, B22, B23, B24);
ofsort BIT6
   25TO30 (MK_48 (B1,  B2,  B3,  B4,  B5,  B6,  B7,  B8,
                  B9,  B10, B11, B12, B13, B14, B15, B16,
                  B17, B18, B19, B20, B21, B22, B23, B24,
```

```
                        B25, B26, B27, B28, B29, B30, B31, B32,
                        B33, B34, B35, B36, B37, B38, B39, B40,
                        B41, B42, B43, B44, B45, B46, B47, B48)) =
         MK_6 (B25, B26, B27, B28, B29, B30);
      ofsort BIT6
         31TO36 (MK_48 (B1,  B2,  B3,  B4,  B5,  B6,  B7,  B8,
                        B9,  B10, B11, B12, B13, B14, B15, B16,
                        B17, B18, B19, B20, B21, B22, B23, B24,
                        B25, B26, B27, B28, B29, B30, B31, B32,
                        B33, B34, B35, B36, B37, B38, B39, B40,
                        B41, B42, B43, B44, B45, B46, B47, B48)) =
         MK_6 (B31, B32, B33, B34, B35, B36);
      ofsort BIT6
         37TO42 (MK_48 (B1,  B2,  B3,  B4,  B5,  B6,  B7,  B8,
                        B9,  B10, B11, B12, B13, B14, B15, B16,
                        B17, B18, B19, B20, B21, B22, B23, B24,
                        B25, B26, B27, B28, B29, B30, B31, B32,
                        B33, B34, B35, B36, B37, B38, B39, B40,
                        B41, B42, B43, B44, B45, B46, B47, B48)) =
         MK_6 (B37, B38, B39, B40, B41, B42);
      ofsort BIT6
         43TO48 (MK_48 (B1,  B2,  B3,  B4,  B5,  B6,  B7,  B8,
                        B9,  B10, B11, B12, B13, B14, B15, B16,
                        B17, B18, B19, B20, B21, B22, B23, B24,
                        B25, B26, B27, B28, B29, B30, B31, B32,
                        B33, B34, B35, B36, B37, B38, B39, B40,
                        B41, B42, B43, B44, B45, B46, B47, B48)) =
         MK_6 (B43, B44, B45, B46, B47, B48);
endtype

(* ------------------------------------------------------------------------ *)
(* data type for 56-bit vectors *)

type BIT56 is EXTENDED_BIT
   sorts BIT56
   opns
      MK_56 (*! constructor *) : BIT, BIT, BIT, BIT, BIT, BIT, BIT, BIT,
                                  BIT, BIT, BIT, BIT, BIT, BIT, BIT, BIT,
                                  BIT, BIT, BIT, BIT, BIT, BIT, BIT, BIT,
                                  BIT, BIT, BIT, BIT, BIT, BIT, BIT, BIT,
                                  BIT, BIT, BIT, BIT, BIT, BIT, BIT, BIT,
                                  BIT, BIT, BIT, BIT, BIT, BIT, BIT, BIT,
                                  BIT, BIT, BIT, BIT, BIT, BIT, BIT, BIT
                                  -> BIT56
      (* left and right shift functions *)
      LSHIFT : BIT56 -> BIT56
      RSHIFT : BIT56 -> BIT56
   eqns
      forall B1,  B2,  B3,  B4,  B5,  B6,  B7,  B8,
             B9,  B10, B11, B12, B13, B14, B15, B16,
             B17, B18, B19, B20, B21, B22, B23, B24,
             B25, B26, B27, B28, B29, B30, B31, B32,
```

```
            B33, B34, B35, B36, B37, B38, B39, B40,
            B41, B42, B43, B44, B45, B46, B47, B48,
            B49, B50, B51, B52, B53, B54, B55, B56,
            B57, B58, B59, B60, B61, B62, B63, B64: BIT
      ofsort BIT56
         LSHIFT (MK_56 (B1,  B2,  B3,  B4,  B5,  B6,  B7,  B8,
                        B9,  B10, B11, B12, B13, B14, B15, B16,
                        B17, B18, B19, B20, B21, B22, B23, B24,
                        B25, B26, B27, B28, B29, B30, B31, B32,
                        B33, B34, B35, B36, B37, B38, B39, B40,
                        B41, B42, B43, B44, B45, B46, B47, B48,
                        B49, B50, B51, B52, B53, B54, B55, B56)) =
         MK_56 (B2,  B3,  B4,  B5,  B6,  B7,  B8,  B9,
                B10, B11, B12, B13, B14, B15, B16, B17,
                B18, B19, B20, B21, B22, B23, B24, B25,
                B26, B27, B28, B1,  B30, B31, B32, B33,
                B34, B35, B36, B37, B38, B39, B40, B41,
                B42, B43, B44, B45, B46, B47, B48, B49,
                B50, B51, B52, B53, B54, B55, B56, B29);
      ofsort BIT56
         RSHIFT (MK_56 (B1,  B2,  B3,  B4,  B5,  B6,  B7,  B8,
                        B9,  B10, B11, B12, B13, B14, B15, B16,
                        B17, B18, B19, B20, B21, B22, B23, B24,
                        B25, B26, B27, B28, B29, B30, B31, B32,
                        B33, B34, B35, B36, B37, B38, B39, B40,
                        B41, B42, B43, B44, B45, B46, B47, B48,
                        B49, B50, B51, B52, B53, B54, B55, B56)) =
         MK_56 (B28, B1,  B2,  B3,  B4,  B5,  B6,  B7,
                B8,  B9,  B10, B11, B12, B13, B14, B15,
                B16, B17, B18, B19, B20, B21, B22, B23,
                B24, B25, B26, B27, B56, B29, B30, B31,
                B32, B33, B34, B35, B36, B37, B38, B39,
                B40, B41, B42, B43, B44, B45, B46, B47,
                B48, B49, B50, B51, B52, B53, B54, B55);
endtype

(* ------------------------------------------------------------------------ *)
(* data type for 64-bit vectors *)

type BIT64 is EXTENDED_BIT, BIT4, BIT32
   sorts
      BIT64 (*! implementedby ADT_BIT64 printedby ADT_PRINT_BIT64 *)
   opns
      MK_64 (*! implementedby MK_64 constructor *) :
            BIT, BIT, BIT, BIT, BIT, BIT, BIT, BIT,
            BIT, BIT, BIT, BIT, BIT, BIT, BIT, BIT,
            BIT, BIT, BIT, BIT, BIT, BIT, BIT, BIT,
            BIT, BIT, BIT, BIT, BIT, BIT, BIT, BIT,
            BIT, BIT, BIT, BIT, BIT, BIT, BIT, BIT,
            BIT, BIT, BIT, BIT, BIT, BIT, BIT, BIT,
            BIT, BIT, BIT, BIT, BIT, BIT, BIT, BIT,
            BIT, BIT, BIT, BIT, BIT, BIT, BIT, BIT -> BIT64
```

```
    (* concatenation of sixteen 4-bit vectors to form a 64-bit vector *)
    MK_64 (*! implementedby CONCAT_BIT4 *) :
          BIT4, BIT4, BIT4, BIT4, BIT4, BIT4, BIT4, BIT4,
          BIT4, BIT4, BIT4, BIT4, BIT4, BIT4, BIT4, BIT4 -> BIT64
    (* concatenation of two 32-bit vectors to a 64-bit vector *)
    MK_64 : BIT32, BIT32 -> BIT64
    (* two projection functions from 64-bit vectors to 32-bit vectors *)
     1TO32 : BIT64 -> BIT32
    33TO64 : BIT64 -> BIT32
eqns
    forall B1,  B2,  B3,  B4,  B5,  B6,  B7,  B8,
           B9,  B10, B11, B12, B13, B14, B15, B16,
           B17, B18, B19, B20, B21, B22, B23, B24,
           B25, B26, B27, B28, B29, B30, B31, B32,
           B33, B34, B35, B36, B37, B38, B39, B40,
           B41, B42, B43, B44, B45, B46, B47, B48,
           B49, B50, B51, B52, B53, B54, B55, B56,
           B57, B58, B59, B60, B61, B62, B63, B64: BIT
    ofsort BIT64
       MK_64 (MK_4 (B1,  B2,  B3,  B4),   MK_4 (B5,  B6,  B7,  B8),
              MK_4 (B9,  B10, B11, B12),  MK_4 (B13, B14, B15, B16),
              MK_4 (B17, B18, B19, B20),  MK_4 (B21, B22, B23, B24),
              MK_4 (B25, B26, B27, B28),  MK_4 (B29, B30, B31, B32),
              MK_4 (B33, B34, B35, B36),  MK_4 (B37, B38, B39, B40),
              MK_4 (B41, B42, B43, B44),  MK_4 (B45, B46, B47, B48),
              MK_4 (B49, B50, B51, B52),  MK_4 (B53, B54, B55, B56),
              MK_4 (B57, B58, B59, B60),  MK_4 (B61, B62, B63, B64)) =
       MK_64 (B1,  B2,  B3,  B4,  B5,  B6,  B7,  B8,
              B9,  B10, B11, B12, B13, B14, B15, B16,
              B17, B18, B19, B20, B21, B22, B23, B24,
              B25, B26, B27, B28, B29, B30, B31, B32,
              B33, B34, B35, B36, B37, B38, B39, B40,
              B41, B42, B43, B44, B45, B46, B47, B48,
              B49, B50, B51, B52, B53, B54, B55, B56,
              B57, B58, B59, B60, B61, B62, B63, B64);
    ofsort BIT64
       MK_64 (MK_32 (B1,  B2,  B3,  B4,  B5,  B6,  B7,  B8,
                     B9,  B10, B11, B12, B13, B14, B15, B16,
                     B17, B18, B19, B20, B21, B22, B23, B24,
                     B25, B26, B27, B28, B29, B30, B31, B32),
              MK_32 (B33, B34, B35, B36, B37, B38, B39, B40,
                     B41, B42, B43, B44, B45, B46, B47, B48,
                     B49, B50, B51, B52, B53, B54, B55, B56,
                     B57, B58, B59, B60, B61, B62, B63, B64)) =
       MK_64 (B1,  B2,  B3,  B4,  B5,  B6,  B7,  B8,
              B9,  B10, B11, B12, B13, B14, B15, B16,
              B17, B18, B19, B20, B21, B22, B23, B24,
              B25, B26, B27, B28, B29, B30, B31, B32,
              B33, B34, B35, B36, B37, B38, B39, B40,
              B41, B42, B43, B44, B45, B46, B47, B48,
              B49, B50, B51, B52, B53, B54, B55, B56,
              B57, B58, B59, B60, B61, B62, B63, B64);
```

```
ofsort BIT32
   1TO32  (MK_64 (B1,  B2,  B3,  B4,  B5,  B6,  B7,  B8,
                  B9,  B10, B11, B12, B13, B14, B15, B16,
                  B17, B18, B19, B20, B21, B22, B23, B24,
                  B25, B26, B27, B28, B29, B30, B31, B32,
                  B33, B34, B35, B36, B37, B38, B39, B40,
                  B41, B42, B43, B44, B45, B46, B47, B48,
                  B49, B50, B51, B52, B53, B54, B55, B56,
                  B57, B58, B59, B60, B61, B62, B63, B64)) =
   MK_32 (B1,  B2,  B3,  B4,  B5,  B6,  B7,  B8,
          B9,  B10, B11, B12, B13, B14, B15, B16,
          B17, B18, B19, B20, B21, B22, B23, B24,
          B25, B26, B27, B28, B29, B30, B31, B32);
ofsort BIT32
   33TO64 (MK_64 (B1,  B2,  B3,  B4,  B5,  B6,  B7,  B8,
                  B9,  B10, B11, B12, B13, B14, B15, B16,
                  B17, B18, B19, B20, B21, B22, B23, B24,
                  B25, B26, B27, B28, B29, B30, B31, B32,
                  B33, B34, B35, B36, B37, B38, B39, B40,
                  B41, B42, B43, B44, B45, B46, B47, B48,
                  B49, B50, B51, B52, B53, B54, B55, B56,
                  B57, B58, B59, B60, B61, B62, B63, B64)) =
   MK_32 (B33, B34, B35, B36, B37, B38, B39, B40,
          B41, B42, B43, B44, B45, B46, B47, B48,
          B49, B50, B51, B52, B53, B54, B55, B56,
          B57, B58, B59, B60, B61, B62, B63, B64);
```

B.4 Library PERMUTATION_FUNCTIONS

This library defines the different permutation functions used by the DES.

```
type PERMUTATION_FUNCTIONS is BIT32, BIT48, BIT56, BIT64
   opns E   : BIT32 -> BIT48    (* expansion *)
        IP  : BIT64 -> BIT64    (* initial permutation *)
        IIP : BIT64 -> BIT64    (* inverse initial permutation *)
        P   : BIT32 -> BIT32    (* permutation *)
        PC1 : BIT64 -> BIT56    (* permuted choice 1 *)
        PC2 : BIT56 -> BIT48    (* permuted choice 2 *)
   eqns
      forall B1,  B2,  B3,  B4,  B5,  B6,  B7,  B8,
             B9,  B10, B11, B12, B13, B14, B15, B16,
             B17, B18, B19, B20, B21, B22, B23, B24,
             B25, B26, B27, B28, B29, B30, B31, B32,
             B33, B34, B35, B36, B37, B38, B39, B40,
             B41, B42, B43, B44, B45, B46, B47, B48,
             B49, B50, B51, B52, B53, B54, B55, B56,
             B57, B58, B59, B60, B61, B62, B63, B64 : BIT
      ofsort BIT48
          E (MK_32 (B1,  B2,  B3,  B4,  B5,  B6,  B7,  B8,
                    B9,  B10, B11, B12, B13, B14, B15, B16,
                    B17, B18, B19, B20, B21, B22, B23, B24,
```

```
                B25, B26, B27, B28, B29, B30, B31, B32)) =
         MK_48 (B32, B1,  B2,  B3,  B4,  B5,
                B4,  B5,  B6,  B7,  B8,  B9,
                B8,  B9,  B10, B11, B12, B13,
                B12, B13, B14, B15, B16, B17,
                B16, B17, B18, B19, B20, B21,
                B20, B21, B22, B23, B24, B25,
                B24, B25, B26, B27, B28, B29,
                B28, B29, B30, B31, B32, B1);
ofsort BIT32
     P (MK_32 (B1,  B2,  B3,  B4,  B5,  B6,  B7,  B8,
                B9,  B10, B11, B12, B13, B14, B15, B16,
                B17, B18, B19, B20, B21, B22, B23, B24,
                B25, B26, B27, B28, B29, B30, B31, B32)) =
         MK_32 (B16, B7,  B20, B21,
                B29, B12, B28, B17,
                B1,  B15, B23, B26,
                B5,  B18, B31, B10,
                B2,  B8,  B24, B14,
                B32, B27, B3,  B9,
                B19, B13, B30, B6,
                B22, B11, B4,  B25);
ofsort BIT56
   PC1 (MK_64 (B1,  B2,  B3,  B4,  B5,  B6,  B7,  B8,
                B9,  B10, B11, B12, B13, B14, B15, B16,
                B17, B18, B19, B20, B21, B22, B23, B24,
                B25, B26, B27, B28, B29, B30, B31, B32,
                B33, B34, B35, B36, B37, B38, B39, B40,
                B41, B42, B43, B44, B45, B46, B47, B48,
                B49, B50, B51, B52, B53, B54, B55, B56,
                B57, B58, B59, B60, B61, B62, B63, B64)) =
         MK_56 (B57, B49, B41, B33, B25, B17, B9,
                B1,  B58, B50, B42, B34, B26, B18,
                B10, B2,  B59, B51, B43, B35, B27,
                B19, B11, B3,  B60, B52, B44, B36,
                B63, B55, B47, B39, B31, B23, B15,
                B7,  B62, B54, B46, B38, B30, B22,
                B14, B6,  B61, B53, B45, B37, B29,
                B21, B13, B5,  B28, B20, B12, B4);
ofsort BIT48
   PC2 (MK_56 (B1,  B2,  B3,  B4,  B5,  B6,  B7,  B8,
                B9,  B10, B11, B12, B13, B14, B15, B16,
                B17, B18, B19, B20, B21, B22, B23, B24,
                B25, B26, B27, B28, B29, B30, B31, B32,
                B33, B34, B35, B36, B37, B38, B39, B40,
                B41, B42, B43, B44, B45, B46, B47, B48,
                B49, B50, B51, B52, B53, B54, B55, B56)) =
         MK_48 (B14, B17, B11, B24, B1,  B5,
                B3,  B28, B15, B6,  B21, B10,
                B23, B19, B12, B4,  B26, B8,
                B16, B7,  B27, B20, B13, B2,
                B41, B52, B31, B37, B47, B55,
```

```
                    B30, B40, B51, B45, B33, B48,
                    B44, B49, B39, B56, B34, B53,
                    B46, B42, B50, B36, B29, B32);
    ofsort BIT64
       IP (MK_64 (B1,  B2,  B3,  B4,  B5,  B6,  B7,  B8,
                  B9,  B10, B11, B12, B13, B14, B15, B16,
                  B17, B18, B19, B20, B21, B22, B23, B24,
                  B25, B26, B27, B28, B29, B30, B31, B32,
                  B33, B34, B35, B36, B37, B38, B39, B40,
                  B41, B42, B43, B44, B45, B46, B47, B48,
                  B49, B50, B51, B52, B53, B54, B55, B56,
                  B57, B58, B59, B60, B61, B62, B63, B64)) =
            MK_64 (B58, B50, B42, B34, B26, B18, B10, B2,
                  B60, B52, B44, B36, B28, B20, B12, B4,
                  B62, B54, B46, B38, B30, B22, B14, B6,
                  B64, B56, B48, B40, B32, B24, B16, B8,
                  B57, B49, B41, B33, B25, B17, B9,  B1,
                  B59, B51, B43, B35, B27, B19, B11, B3,
                  B61, B53, B45, B37, B29, B21, B13, B5,
                  B63, B55, B47, B39, B31, B23, B15, B7);
    ofsort BIT64
      IIP (MK_64 (B1,  B2,  B3,  B4,  B5,  B6,  B7,  B8,
                  B9,  B10, B11, B12, B13, B14, B15, B16,
                  B17, B18, B19, B20, B21, B22, B23, B24,
                  B25, B26, B27, B28, B29, B30, B31, B32,
                  B33, B34, B35, B36, B37, B38, B39, B40,
                  B41, B42, B43, B44, B45, B46, B47, B48,
                  B49, B50, B51, B52, B53, B54, B55, B56,
                  B57, B58, B59, B60, B61, B62, B63, B64)) =
            MK_64 (B40, B8,  B48, B16, B56, B24, B64, B32,
                  B39, B7,  B47, B15, B55, B23, B63, B31,
                  B38, B6,  B46, B14, B54, B22, B62, B30,
                  B37, B5,  B45, B13, B53, B21, B61, B29,
                  B36, B4,  B44, B12, B52, B20, B60, B28,
                  B35, B3,  B43, B11, B51, B19, B59, B27,
                  B34, B2,  B42, B10, B50, B18, B58, B26,
                  B33, B1,  B41, B9,  B49, B17, B57, B25);
endtype
```

B.5 Library S_BOX_FUNCTIONS

Contrary to the LNT model, the LOTOS model defines each S-box as a functions, which completely expresses the *function* of the corresponding S-box, rather than the array defining the S-box. This avoids the definition of additional data types for the array, together with the accessor functions (which are generated automatically by the LNT2LOTOS translator). Precisely, each of the following S-box functions associates to any 6-bit vector the 4-bit value encoding of the corresponding entry in the associated S-box table (see Appendix A.5 for an encoding of these tables). The DES standard defines that for a 6-bit vector $b_1b_2b_3b_4b_5b_6$, corresponds the entry in the b_1b_6-th row and the $b_2b_3b_4b_5$-th column. The defining equations are ordered such that the right hand sides correspond to the usual reading order of the S-box tables of the standard (rows from top to bottom, and each row from left to right).

The definitions of these functions use premisses, because in the case type BIT implements the abstract singleton type, 1 is no constructor and thus not supported on the left hand side of an equation, e.g., the equation

```
S1 (MK_6 (0, 0, 0, 0, 1, 0) = MK_4 (0, 1, 0, 0);
```

would be rejected by the LOTOS compiler.

```
type S_BOX_FUNCTIONS is BIT4, BIT6
   opns S1 : BIT6 -> BIT4
        S2 : BIT6 -> BIT4
        S3 : BIT6 -> BIT4
        S4 : BIT6 -> BIT4
        S5 : BIT6 -> BIT4
        S6 : BIT6 -> BIT4
        S7 : BIT6 -> BIT4
        S8 : BIT6 -> BIT4
   eqns
      (*
       * in the equations below, premisses are used rather than pattern
       * matching because '1' is a constructor for type BIT_CONCRETE
       * but not for type BIT_ABSTRACT
       *)
      forall BV6 : BIT6
      ofsort BIT4
         BV6 = MK_6 (0, 0, 0, 0, 0, 0) => S1 (BV6) = MK_4 (1, 1, 1, 0);
         BV6 = MK_6 (0, 0, 0, 0, 1, 0) => S1 (BV6) = MK_4 (0, 1, 0, 0);
         BV6 = MK_6 (0, 0, 0, 1, 0, 0) => S1 (BV6) = MK_4 (1, 1, 0, 1);
         BV6 = MK_6 (0, 0, 0, 1, 1, 0) => S1 (BV6) = MK_4 (0, 0, 0, 1);
         BV6 = MK_6 (0, 0, 1, 0, 0, 0) => S1 (BV6) = MK_4 (0, 0, 1, 0);
         BV6 = MK_6 (0, 0, 1, 0, 1, 0) => S1 (BV6) = MK_4 (1, 1, 1, 1);
         BV6 = MK_6 (0, 0, 1, 1, 0, 0) => S1 (BV6) = MK_4 (1, 0, 1, 1);
         BV6 = MK_6 (0, 0, 1, 1, 1, 0) => S1 (BV6) = MK_4 (1, 0, 0, 0);
         BV6 = MK_6 (0, 1, 0, 0, 0, 0) => S1 (BV6) = MK_4 (0, 0, 1, 1);
         BV6 = MK_6 (0, 1, 0, 0, 1, 0) => S1 (BV6) = MK_4 (1, 0, 1, 0);
         BV6 = MK_6 (0, 1, 0, 1, 0, 0) => S1 (BV6) = MK_4 (0, 1, 1, 0);
         BV6 = MK_6 (0, 1, 0, 1, 1, 0) => S1 (BV6) = MK_4 (1, 1, 0, 0);
         BV6 = MK_6 (0, 1, 1, 0, 0, 0) => S1 (BV6) = MK_4 (0, 1, 0, 1);
         BV6 = MK_6 (0, 1, 1, 0, 1, 0) => S1 (BV6) = MK_4 (1, 0, 0, 1);
         BV6 = MK_6 (0, 1, 1, 1, 0, 0) => S1 (BV6) = MK_4 (0, 0, 0, 0);
         BV6 = MK_6 (0, 1, 1, 1, 1, 0) => S1 (BV6) = MK_4 (0, 1, 1, 1);
         BV6 = MK_6 (0, 0, 0, 0, 0, 1) => S1 (BV6) = MK_4 (0, 0, 0, 0);
         BV6 = MK_6 (0, 0, 0, 0, 1, 1) => S1 (BV6) = MK_4 (1, 1, 1, 1);
         BV6 = MK_6 (0, 0, 0, 1, 0, 1) => S1 (BV6) = MK_4 (0, 1, 1, 1);
         BV6 = MK_6 (0, 0, 0, 1, 1, 1) => S1 (BV6) = MK_4 (0, 1, 0, 0);
         BV6 = MK_6 (0, 0, 1, 0, 0, 1) => S1 (BV6) = MK_4 (1, 1, 1, 0);
         BV6 = MK_6 (0, 0, 1, 0, 1, 1) => S1 (BV6) = MK_4 (0, 0, 1, 0);
         BV6 = MK_6 (0, 0, 1, 1, 0, 1) => S1 (BV6) = MK_4 (1, 1, 0, 1);
         BV6 = MK_6 (0, 0, 1, 1, 1, 1) => S1 (BV6) = MK_4 (0, 0, 0, 1);
         BV6 = MK_6 (0, 1, 0, 0, 0, 1) => S1 (BV6) = MK_4 (1, 0, 1, 0);
         BV6 = MK_6 (0, 1, 0, 0, 1, 1) => S1 (BV6) = MK_4 (0, 1, 1, 0);
         BV6 = MK_6 (0, 1, 0, 1, 0, 1) => S1 (BV6) = MK_4 (1, 1, 0, 0);
```

```
   BV6 = MK_6 (0, 1, 0, 1, 1, 1) => S1 (BV6) = MK_4 (1, 0, 1, 1);
   BV6 = MK_6 (0, 1, 1, 0, 0, 1) => S1 (BV6) = MK_4 (1, 0, 0, 1);
   BV6 = MK_6 (0, 1, 1, 0, 1, 1) => S1 (BV6) = MK_4 (0, 1, 0, 1);
   BV6 = MK_6 (0, 1, 1, 1, 0, 1) => S1 (BV6) = MK_4 (0, 0, 1, 1);
   BV6 = MK_6 (0, 1, 1, 1, 1, 1) => S1 (BV6) = MK_4 (1, 0, 0, 0);
   BV6 = MK_6 (1, 0, 0, 0, 0, 0) => S1 (BV6) = MK_4 (0, 1, 0, 0);
   BV6 = MK_6 (1, 0, 0, 0, 1, 0) => S1 (BV6) = MK_4 (0, 0, 0, 1);
   BV6 = MK_6 (1, 0, 0, 1, 0, 0) => S1 (BV6) = MK_4 (1, 1, 1, 0);
   BV6 = MK_6 (1, 0, 0, 1, 1, 0) => S1 (BV6) = MK_4 (1, 0, 0, 0);
   BV6 = MK_6 (1, 0, 1, 0, 0, 0) => S1 (BV6) = MK_4 (1, 1, 0, 1);
   BV6 = MK_6 (1, 0, 1, 0, 1, 0) => S1 (BV6) = MK_4 (0, 1, 1, 0);
   BV6 = MK_6 (1, 0, 1, 1, 0, 0) => S1 (BV6) = MK_4 (0, 0, 1, 0);
   BV6 = MK_6 (1, 0, 1, 1, 1, 0) => S1 (BV6) = MK_4 (1, 0, 1, 1);
   BV6 = MK_6 (1, 1, 0, 0, 0, 0) => S1 (BV6) = MK_4 (1, 1, 1, 1);
   BV6 = MK_6 (1, 1, 0, 0, 1, 0) => S1 (BV6) = MK_4 (1, 1, 0, 0);
   BV6 = MK_6 (1, 1, 0, 1, 0, 0) => S1 (BV6) = MK_4 (1, 0, 0, 1);
   BV6 = MK_6 (1, 1, 0, 1, 1, 0) => S1 (BV6) = MK_4 (0, 1, 1, 1);
   BV6 = MK_6 (1, 1, 1, 0, 0, 0) => S1 (BV6) = MK_4 (0, 0, 1, 1);
   BV6 = MK_6 (1, 1, 1, 0, 1, 0) => S1 (BV6) = MK_4 (1, 0, 1, 0);
   BV6 = MK_6 (1, 1, 1, 1, 0, 0) => S1 (BV6) = MK_4 (0, 1, 0, 1);
   BV6 = MK_6 (1, 1, 1, 1, 1, 0) => S1 (BV6) = MK_4 (0, 0, 0, 0);
   BV6 = MK_6 (1, 0, 0, 0, 0, 1) => S1 (BV6) = MK_4 (1, 1, 1, 1);
   BV6 = MK_6 (1, 0, 0, 0, 1, 1) => S1 (BV6) = MK_4 (1, 1, 0, 0);
   BV6 = MK_6 (1, 0, 0, 1, 0, 1) => S1 (BV6) = MK_4 (1, 0, 0, 0);
   BV6 = MK_6 (1, 0, 0, 1, 1, 1) => S1 (BV6) = MK_4 (0, 0, 1, 0);
   BV6 = MK_6 (1, 0, 1, 0, 0, 1) => S1 (BV6) = MK_4 (0, 1, 0, 0);
   BV6 = MK_6 (1, 0, 1, 0, 1, 1) => S1 (BV6) = MK_4 (1, 0, 0, 1);
   BV6 = MK_6 (1, 0, 1, 1, 0, 1) => S1 (BV6) = MK_4 (0, 0, 0, 1);
   BV6 = MK_6 (1, 0, 1, 1, 1, 1) => S1 (BV6) = MK_4 (0, 1, 1, 1);
   BV6 = MK_6 (1, 1, 0, 0, 0, 1) => S1 (BV6) = MK_4 (0, 1, 0, 1);
   BV6 = MK_6 (1, 1, 0, 0, 1, 1) => S1 (BV6) = MK_4 (1, 0, 1, 1);
   BV6 = MK_6 (1, 1, 0, 1, 0, 1) => S1 (BV6) = MK_4 (0, 0, 1, 1);
   BV6 = MK_6 (1, 1, 0, 1, 1, 1) => S1 (BV6) = MK_4 (1, 1, 1, 0);
   BV6 = MK_6 (1, 1, 1, 0, 0, 1) => S1 (BV6) = MK_4 (1, 0, 1, 0);
   BV6 = MK_6 (1, 1, 1, 0, 1, 1) => S1 (BV6) = MK_4 (0, 0, 0, 0);
   BV6 = MK_6 (1, 1, 1, 1, 0, 1) => S1 (BV6) = MK_4 (0, 1, 1, 0);
   BV6 = MK_6 (1, 1, 1, 1, 1, 1) => S1 (BV6) = MK_4 (1, 1, 0, 1);
ofsort BIT4
   BV6 = MK_6 (0, 0, 0, 0, 0, 0) => S2 (BV6) = MK_4 (1, 1, 1, 1);
   BV6 = MK_6 (0, 0, 0, 0, 1, 0) => S2 (BV6) = MK_4 (0, 0, 0, 1);
   BV6 = MK_6 (0, 0, 0, 1, 0, 0) => S2 (BV6) = MK_4 (1, 0, 0, 0);
   BV6 = MK_6 (0, 0, 0, 1, 1, 0) => S2 (BV6) = MK_4 (1, 1, 1, 0);
   BV6 = MK_6 (0, 0, 1, 0, 0, 0) => S2 (BV6) = MK_4 (0, 1, 1, 0);
   BV6 = MK_6 (0, 0, 1, 0, 1, 0) => S2 (BV6) = MK_4 (1, 0, 1, 1);
   BV6 = MK_6 (0, 0, 1, 1, 0, 0) => S2 (BV6) = MK_4 (0, 0, 1, 1);
   BV6 = MK_6 (0, 0, 1, 1, 1, 0) => S2 (BV6) = MK_4 (0, 1, 0, 0);
   BV6 = MK_6 (0, 1, 0, 0, 0, 0) => S2 (BV6) = MK_4 (1, 0, 0, 1);
   BV6 = MK_6 (0, 1, 0, 0, 1, 0) => S2 (BV6) = MK_4 (0, 1, 1, 1);
   BV6 = MK_6 (0, 1, 0, 1, 0, 0) => S2 (BV6) = MK_4 (0, 0, 1, 0);
   BV6 = MK_6 (0, 1, 0, 1, 1, 0) => S2 (BV6) = MK_4 (1, 1, 0, 1);
   BV6 = MK_6 (0, 1, 1, 0, 0, 0) => S2 (BV6) = MK_4 (1, 1, 0, 0);
   BV6 = MK_6 (0, 1, 1, 0, 1, 0) => S2 (BV6) = MK_4 (0, 0, 0, 0);
```

```
    BV6 = MK_6 (0, 1, 1, 1, 0, 0) => S2 (BV6) = MK_4 (0, 1, 0, 1);
    BV6 = MK_6 (0, 1, 1, 1, 1, 0) => S2 (BV6) = MK_4 (1, 0, 1, 0);
    BV6 = MK_6 (0, 0, 0, 0, 0, 1) => S2 (BV6) = MK_4 (0, 0, 1, 1);
    BV6 = MK_6 (0, 0, 0, 0, 1, 1) => S2 (BV6) = MK_4 (1, 1, 0, 1);
    BV6 = MK_6 (0, 0, 0, 1, 0, 1) => S2 (BV6) = MK_4 (0, 1, 0, 0);
    BV6 = MK_6 (0, 0, 0, 1, 1, 1) => S2 (BV6) = MK_4 (0, 1, 1, 1);
    BV6 = MK_6 (0, 0, 1, 0, 0, 1) => S2 (BV6) = MK_4 (1, 1, 1, 1);
    BV6 = MK_6 (0, 0, 1, 0, 1, 1) => S2 (BV6) = MK_4 (0, 0, 1, 0);
    BV6 = MK_6 (0, 0, 1, 1, 0, 1) => S2 (BV6) = MK_4 (1, 0, 0, 0);
    BV6 = MK_6 (0, 0, 1, 1, 1, 1) => S2 (BV6) = MK_4 (1, 1, 1, 0);
    BV6 = MK_6 (0, 1, 0, 0, 0, 1) => S2 (BV6) = MK_4 (1, 1, 0, 0);
    BV6 = MK_6 (0, 1, 0, 0, 1, 1) => S2 (BV6) = MK_4 (0, 0, 0, 0);
    BV6 = MK_6 (0, 1, 0, 1, 0, 1) => S2 (BV6) = MK_4 (0, 0, 0, 1);
    BV6 = MK_6 (0, 1, 0, 1, 1, 1) => S2 (BV6) = MK_4 (1, 0, 1, 0);
    BV6 = MK_6 (0, 1, 1, 0, 0, 1) => S2 (BV6) = MK_4 (0, 1, 1, 0);
    BV6 = MK_6 (0, 1, 1, 0, 1, 1) => S2 (BV6) = MK_4 (1, 0, 0, 1);
    BV6 = MK_6 (0, 1, 1, 1, 0, 1) => S2 (BV6) = MK_4 (1, 0, 1, 1);
    BV6 = MK_6 (0, 1, 1, 1, 1, 1) => S2 (BV6) = MK_4 (0, 1, 0, 1);
    BV6 = MK_6 (1, 0, 0, 0, 0, 0) => S2 (BV6) = MK_4 (0, 0, 0, 0);
    BV6 = MK_6 (1, 0, 0, 0, 1, 0) => S2 (BV6) = MK_4 (1, 1, 1, 0);
    BV6 = MK_6 (1, 0, 0, 1, 0, 0) => S2 (BV6) = MK_4 (0, 1, 1, 1);
    BV6 = MK_6 (1, 0, 0, 1, 1, 0) => S2 (BV6) = MK_4 (1, 0, 1, 1);
    BV6 = MK_6 (1, 0, 1, 0, 0, 0) => S2 (BV6) = MK_4 (1, 0, 1, 0);
    BV6 = MK_6 (1, 0, 1, 0, 1, 0) => S2 (BV6) = MK_4 (0, 1, 0, 0);
    BV6 = MK_6 (1, 0, 1, 1, 0, 0) => S2 (BV6) = MK_4 (1, 1, 0, 1);
    BV6 = MK_6 (1, 0, 1, 1, 1, 0) => S2 (BV6) = MK_4 (0, 0, 0, 1);
    BV6 = MK_6 (1, 1, 0, 0, 0, 0) => S2 (BV6) = MK_4 (0, 1, 0, 1);
    BV6 = MK_6 (1, 1, 0, 0, 1, 0) => S2 (BV6) = MK_4 (1, 0, 0, 0);
    BV6 = MK_6 (1, 1, 0, 1, 0, 0) => S2 (BV6) = MK_4 (1, 1, 0, 0);
    BV6 = MK_6 (1, 1, 0, 1, 1, 0) => S2 (BV6) = MK_4 (0, 1, 1, 0);
    BV6 = MK_6 (1, 1, 1, 0, 0, 0) => S2 (BV6) = MK_4 (1, 0, 0, 1);
    BV6 = MK_6 (1, 1, 1, 0, 1, 0) => S2 (BV6) = MK_4 (0, 0, 1, 1);
    BV6 = MK_6 (1, 1, 1, 1, 0, 0) => S2 (BV6) = MK_4 (0, 0, 1, 0);
    BV6 = MK_6 (1, 1, 1, 1, 1, 0) => S2 (BV6) = MK_4 (1, 1, 1, 1);
    BV6 = MK_6 (1, 0, 0, 0, 0, 1) => S2 (BV6) = MK_4 (1, 1, 0, 1);
    BV6 = MK_6 (1, 0, 0, 0, 1, 1) => S2 (BV6) = MK_4 (1, 0, 0, 0);
    BV6 = MK_6 (1, 0, 0, 1, 0, 1) => S2 (BV6) = MK_4 (1, 0, 1, 0);
    BV6 = MK_6 (1, 0, 0, 1, 1, 1) => S2 (BV6) = MK_4 (0, 0, 0, 1);
    BV6 = MK_6 (1, 0, 1, 0, 0, 1) => S2 (BV6) = MK_4 (0, 0, 1, 1);
    BV6 = MK_6 (1, 0, 1, 0, 1, 1) => S2 (BV6) = MK_4 (1, 1, 1, 1);
    BV6 = MK_6 (1, 0, 1, 1, 0, 1) => S2 (BV6) = MK_4 (0, 1, 0, 0);
    BV6 = MK_6 (1, 0, 1, 1, 1, 1) => S2 (BV6) = MK_4 (0, 0, 1, 0);
    BV6 = MK_6 (1, 1, 0, 0, 0, 1) => S2 (BV6) = MK_4 (1, 0, 1, 1);
    BV6 = MK_6 (1, 1, 0, 0, 1, 1) => S2 (BV6) = MK_4 (0, 1, 1, 0);
    BV6 = MK_6 (1, 1, 0, 1, 0, 1) => S2 (BV6) = MK_4 (0, 1, 1, 1);
    BV6 = MK_6 (1, 1, 0, 1, 1, 1) => S2 (BV6) = MK_4 (1, 1, 0, 0);
    BV6 = MK_6 (1, 1, 1, 0, 0, 1) => S2 (BV6) = MK_4 (0, 0, 0, 0);
    BV6 = MK_6 (1, 1, 1, 0, 1, 1) => S2 (BV6) = MK_4 (0, 1, 0, 1);
    BV6 = MK_6 (1, 1, 1, 1, 0, 1) => S2 (BV6) = MK_4 (1, 1, 1, 0);
    BV6 = MK_6 (1, 1, 1, 1, 1, 1) => S2 (BV6) = MK_4 (1, 0, 0, 1);
ofsort BIT4
    BV6 = MK_6 (0, 0, 0, 0, 0, 0) => S3 (BV6) = MK_4 (1, 0, 1, 0);
```

```
BV6 = MK_6 (0, 0, 0, 0, 1, 0) => S3 (BV6) = MK_4 (0, 0, 0, 0);
BV6 = MK_6 (0, 0, 0, 1, 0, 0) => S3 (BV6) = MK_4 (1, 0, 0, 1);
BV6 = MK_6 (0, 0, 0, 1, 1, 0) => S3 (BV6) = MK_4 (1, 1, 1, 0);
BV6 = MK_6 (0, 0, 1, 0, 0, 0) => S3 (BV6) = MK_4 (0, 1, 1, 0);
BV6 = MK_6 (0, 0, 1, 0, 1, 0) => S3 (BV6) = MK_4 (0, 0, 1, 1);
BV6 = MK_6 (0, 0, 1, 1, 0, 0) => S3 (BV6) = MK_4 (1, 1, 1, 1);
BV6 = MK_6 (0, 0, 1, 1, 1, 0) => S3 (BV6) = MK_4 (0, 1, 0, 1);
BV6 = MK_6 (0, 1, 0, 0, 0, 0) => S3 (BV6) = MK_4 (0, 0, 0, 1);
BV6 = MK_6 (0, 1, 0, 0, 1, 0) => S3 (BV6) = MK_4 (1, 1, 0, 1);
BV6 = MK_6 (0, 1, 0, 1, 0, 0) => S3 (BV6) = MK_4 (1, 1, 0, 0);
BV6 = MK_6 (0, 1, 0, 1, 1, 0) => S3 (BV6) = MK_4 (0, 1, 1, 1);
BV6 = MK_6 (0, 1, 1, 0, 0, 0) => S3 (BV6) = MK_4 (1, 0, 1, 1);
BV6 = MK_6 (0, 1, 1, 0, 1, 0) => S3 (BV6) = MK_4 (0, 1, 0, 0);
BV6 = MK_6 (0, 1, 1, 1, 0, 0) => S3 (BV6) = MK_4 (0, 0, 1, 0);
BV6 = MK_6 (0, 1, 1, 1, 1, 0) => S3 (BV6) = MK_4 (1, 0, 0, 0);
BV6 = MK_6 (0, 0, 0, 0, 0, 1) => S3 (BV6) = MK_4 (1, 1, 0, 1);
BV6 = MK_6 (0, 0, 0, 0, 1, 1) => S3 (BV6) = MK_4 (0, 1, 1, 1);
BV6 = MK_6 (0, 0, 0, 1, 0, 1) => S3 (BV6) = MK_4 (0, 0, 0, 0);
BV6 = MK_6 (0, 0, 0, 1, 1, 1) => S3 (BV6) = MK_4 (1, 0, 0, 1);
BV6 = MK_6 (0, 0, 1, 0, 0, 1) => S3 (BV6) = MK_4 (0, 0, 1, 1);
BV6 = MK_6 (0, 0, 1, 0, 1, 1) => S3 (BV6) = MK_4 (0, 1, 0, 0);
BV6 = MK_6 (0, 0, 1, 1, 0, 1) => S3 (BV6) = MK_4 (0, 1, 1, 0);
BV6 = MK_6 (0, 0, 1, 1, 1, 1) => S3 (BV6) = MK_4 (1, 0, 1, 0);
BV6 = MK_6 (0, 1, 0, 0, 0, 1) => S3 (BV6) = MK_4 (0, 0, 1, 0);
BV6 = MK_6 (0, 1, 0, 0, 1, 1) => S3 (BV6) = MK_4 (1, 0, 0, 0);
BV6 = MK_6 (0, 1, 0, 1, 0, 1) => S3 (BV6) = MK_4 (0, 1, 0, 1);
BV6 = MK_6 (0, 1, 0, 1, 1, 1) => S3 (BV6) = MK_4 (1, 1, 1, 0);
BV6 = MK_6 (0, 1, 1, 0, 0, 1) => S3 (BV6) = MK_4 (1, 1, 0, 0);
BV6 = MK_6 (0, 1, 1, 0, 1, 1) => S3 (BV6) = MK_4 (1, 0, 1, 1);
BV6 = MK_6 (0, 1, 1, 1, 0, 1) => S3 (BV6) = MK_4 (1, 1, 1, 1);
BV6 = MK_6 (0, 1, 1, 1, 1, 1) => S3 (BV6) = MK_4 (0, 0, 0, 1);
BV6 = MK_6 (1, 0, 0, 0, 0, 0) => S3 (BV6) = MK_4 (1, 1, 0, 1);
BV6 = MK_6 (1, 0, 0, 0, 1, 0) => S3 (BV6) = MK_4 (0, 1, 1, 0);
BV6 = MK_6 (1, 0, 0, 1, 0, 0) => S3 (BV6) = MK_4 (0, 1, 0, 0);
BV6 = MK_6 (1, 0, 0, 1, 1, 0) => S3 (BV6) = MK_4 (1, 0, 0, 1);
BV6 = MK_6 (1, 0, 1, 0, 0, 0) => S3 (BV6) = MK_4 (1, 0, 0, 0);
BV6 = MK_6 (1, 0, 1, 0, 1, 0) => S3 (BV6) = MK_4 (1, 1, 1, 1);
BV6 = MK_6 (1, 0, 1, 1, 0, 0) => S3 (BV6) = MK_4 (0, 0, 1, 1);
BV6 = MK_6 (1, 0, 1, 1, 1, 0) => S3 (BV6) = MK_4 (0, 0, 0, 0);
BV6 = MK_6 (1, 1, 0, 0, 0, 0) => S3 (BV6) = MK_4 (1, 0, 1, 1);
BV6 = MK_6 (1, 1, 0, 0, 1, 0) => S3 (BV6) = MK_4 (0, 0, 0, 1);
BV6 = MK_6 (1, 1, 0, 1, 0, 0) => S3 (BV6) = MK_4 (0, 0, 1, 0);
BV6 = MK_6 (1, 1, 0, 1, 1, 0) => S3 (BV6) = MK_4 (1, 1, 0, 0);
BV6 = MK_6 (1, 1, 1, 0, 0, 0) => S3 (BV6) = MK_4 (0, 1, 0, 1);
BV6 = MK_6 (1, 1, 1, 0, 1, 0) => S3 (BV6) = MK_4 (1, 0, 1, 0);
BV6 = MK_6 (1, 1, 1, 1, 0, 0) => S3 (BV6) = MK_4 (1, 1, 1, 0);
BV6 = MK_6 (1, 1, 1, 1, 1, 0) => S3 (BV6) = MK_4 (0, 1, 1, 1);
BV6 = MK_6 (1, 0, 0, 0, 0, 1) => S3 (BV6) = MK_4 (0, 0, 0, 1);
BV6 = MK_6 (1, 0, 0, 0, 1, 1) => S3 (BV6) = MK_4 (1, 0, 1, 0);
BV6 = MK_6 (1, 0, 0, 1, 0, 1) => S3 (BV6) = MK_4 (1, 0, 1, 1);
BV6 = MK_6 (1, 0, 0, 1, 1, 1) => S3 (BV6) = MK_4 (0, 0, 0, 0);
BV6 = MK_6 (1, 0, 1, 0, 0, 1) => S3 (BV6) = MK_4 (0, 1, 1, 0);
```

```
    BV6 = MK_6 (1, 0, 1, 0, 1, 1) => S3 (BV6) = MK_4 (1, 0, 0, 1);
    BV6 = MK_6 (1, 0, 1, 1, 0, 1) => S3 (BV6) = MK_4 (1, 0, 0, 0);
    BV6 = MK_6 (1, 0, 1, 1, 1, 1) => S3 (BV6) = MK_4 (0, 1, 1, 1);
    BV6 = MK_6 (1, 1, 0, 0, 0, 1) => S3 (BV6) = MK_4 (0, 1, 0, 0);
    BV6 = MK_6 (1, 1, 0, 0, 1, 1) => S3 (BV6) = MK_4 (1, 1, 1, 1);
    BV6 = MK_6 (1, 1, 0, 1, 0, 1) => S3 (BV6) = MK_4 (1, 1, 1, 0);
    BV6 = MK_6 (1, 1, 0, 1, 1, 1) => S3 (BV6) = MK_4 (0, 0, 1, 1);
    BV6 = MK_6 (1, 1, 1, 0, 0, 1) => S3 (BV6) = MK_4 (1, 0, 1, 1);
    BV6 = MK_6 (1, 1, 1, 0, 1, 1) => S3 (BV6) = MK_4 (0, 1, 0, 1);
    BV6 = MK_6 (1, 1, 1, 1, 0, 1) => S3 (BV6) = MK_4 (0, 0, 1, 0);
    BV6 = MK_6 (1, 1, 1, 1, 1, 1) => S3 (BV6) = MK_4 (1, 1, 0, 0);
ofsort BIT4
    BV6 = MK_6 (0, 0, 0, 0, 0, 0) => S4 (BV6) = MK_4 (0, 1, 1, 1);
    BV6 = MK_6 (0, 0, 0, 0, 1, 0) => S4 (BV6) = MK_4 (1, 1, 0, 1);
    BV6 = MK_6 (0, 0, 0, 1, 0, 0) => S4 (BV6) = MK_4 (1, 1, 1, 0);
    BV6 = MK_6 (0, 0, 0, 1, 1, 0) => S4 (BV6) = MK_4 (0, 0, 1, 1);
    BV6 = MK_6 (0, 0, 1, 0, 0, 0) => S4 (BV6) = MK_4 (0, 0, 0, 0);
    BV6 = MK_6 (0, 0, 1, 0, 1, 0) => S4 (BV6) = MK_4 (0, 1, 1, 0);
    BV6 = MK_6 (0, 0, 1, 1, 0, 0) => S4 (BV6) = MK_4 (1, 0, 0, 1);
    BV6 = MK_6 (0, 0, 1, 1, 1, 0) => S4 (BV6) = MK_4 (1, 0, 1, 0);
    BV6 = MK_6 (0, 1, 0, 0, 0, 0) => S4 (BV6) = MK_4 (0, 0, 0, 1);
    BV6 = MK_6 (0, 1, 0, 0, 1, 0) => S4 (BV6) = MK_4 (0, 0, 1, 0);
    BV6 = MK_6 (0, 1, 0, 1, 0, 0) => S4 (BV6) = MK_4 (1, 0, 0, 0);
    BV6 = MK_6 (0, 1, 0, 1, 1, 0) => S4 (BV6) = MK_4 (0, 1, 0, 1);
    BV6 = MK_6 (0, 1, 1, 0, 0, 0) => S4 (BV6) = MK_4 (1, 0, 1, 1);
    BV6 = MK_6 (0, 1, 1, 0, 1, 0) => S4 (BV6) = MK_4 (1, 1, 0, 0);
    BV6 = MK_6 (0, 1, 1, 1, 0, 0) => S4 (BV6) = MK_4 (0, 1, 0, 0);
    BV6 = MK_6 (0, 1, 1, 1, 1, 0) => S4 (BV6) = MK_4 (1, 1, 1, 1);
    BV6 = MK_6 (0, 0, 0, 0, 0, 1) => S4 (BV6) = MK_4 (1, 1, 0, 1);
    BV6 = MK_6 (0, 0, 0, 0, 1, 1) => S4 (BV6) = MK_4 (1, 0, 0, 0);
    BV6 = MK_6 (0, 0, 0, 1, 0, 1) => S4 (BV6) = MK_4 (1, 0, 1, 1);
    BV6 = MK_6 (0, 0, 0, 1, 1, 1) => S4 (BV6) = MK_4 (0, 1, 0, 1);
    BV6 = MK_6 (0, 0, 1, 0, 0, 1) => S4 (BV6) = MK_4 (0, 1, 1, 0);
    BV6 = MK_6 (0, 0, 1, 0, 1, 1) => S4 (BV6) = MK_4 (1, 1, 1, 1);
    BV6 = MK_6 (0, 0, 1, 1, 0, 1) => S4 (BV6) = MK_4 (0, 0, 0, 0);
    BV6 = MK_6 (0, 0, 1, 1, 1, 1) => S4 (BV6) = MK_4 (0, 0, 1, 1);
    BV6 = MK_6 (0, 1, 0, 0, 0, 1) => S4 (BV6) = MK_4 (0, 1, 0, 0);
    BV6 = MK_6 (0, 1, 0, 0, 1, 1) => S4 (BV6) = MK_4 (0, 1, 1, 1);
    BV6 = MK_6 (0, 1, 0, 1, 0, 1) => S4 (BV6) = MK_4 (0, 0, 1, 0);
    BV6 = MK_6 (0, 1, 0, 1, 1, 1) => S4 (BV6) = MK_4 (1, 1, 0, 0);
    BV6 = MK_6 (0, 1, 1, 0, 0, 1) => S4 (BV6) = MK_4 (0, 0, 0, 1);
    BV6 = MK_6 (0, 1, 1, 0, 1, 1) => S4 (BV6) = MK_4 (1, 0, 1, 0);
    BV6 = MK_6 (0, 1, 1, 1, 0, 1) => S4 (BV6) = MK_4 (1, 1, 1, 0);
    BV6 = MK_6 (0, 1, 1, 1, 1, 1) => S4 (BV6) = MK_4 (1, 0, 0, 1);
    BV6 = MK_6 (1, 0, 0, 0, 0, 0) => S4 (BV6) = MK_4 (1, 0, 1, 0);
    BV6 = MK_6 (1, 0, 0, 0, 1, 0) => S4 (BV6) = MK_4 (0, 1, 1, 0);
    BV6 = MK_6 (1, 0, 0, 1, 0, 0) => S4 (BV6) = MK_4 (1, 0, 0, 1);
    BV6 = MK_6 (1, 0, 0, 1, 1, 0) => S4 (BV6) = MK_4 (0, 0, 0, 0);
    BV6 = MK_6 (1, 0, 1, 0, 0, 0) => S4 (BV6) = MK_4 (1, 1, 0, 0);
    BV6 = MK_6 (1, 0, 1, 0, 1, 0) => S4 (BV6) = MK_4 (1, 0, 1, 1);
    BV6 = MK_6 (1, 0, 1, 1, 0, 0) => S4 (BV6) = MK_4 (0, 1, 1, 1);
    BV6 = MK_6 (1, 0, 1, 1, 1, 0) => S4 (BV6) = MK_4 (1, 1, 0, 1);
```

```
    BV6 = MK_6 (1, 1, 0, 0, 0, 0) => S4 (BV6) = MK_4 (1, 1, 1, 1);
    BV6 = MK_6 (1, 1, 0, 0, 1, 0) => S4 (BV6) = MK_4 (0, 0, 0, 1);
    BV6 = MK_6 (1, 1, 0, 1, 0, 0) => S4 (BV6) = MK_4 (0, 0, 1, 1);
    BV6 = MK_6 (1, 1, 0, 1, 1, 0) => S4 (BV6) = MK_4 (1, 1, 1, 0);
    BV6 = MK_6 (1, 1, 1, 0, 0, 0) => S4 (BV6) = MK_4 (0, 1, 0, 1);
    BV6 = MK_6 (1, 1, 1, 0, 1, 0) => S4 (BV6) = MK_4 (0, 0, 1, 0);
    BV6 = MK_6 (1, 1, 1, 1, 0, 0) => S4 (BV6) = MK_4 (1, 0, 0, 0);
    BV6 = MK_6 (1, 1, 1, 1, 1, 0) => S4 (BV6) = MK_4 (0, 1, 0, 0);
    BV6 = MK_6 (1, 0, 0, 0, 0, 1) => S4 (BV6) = MK_4 (0, 0, 1, 1);
    BV6 = MK_6 (1, 0, 0, 0, 1, 1) => S4 (BV6) = MK_4 (1, 1, 1, 1);
    BV6 = MK_6 (1, 0, 0, 1, 0, 1) => S4 (BV6) = MK_4 (0, 0, 0, 0);
    BV6 = MK_6 (1, 0, 0, 1, 1, 1) => S4 (BV6) = MK_4 (0, 1, 1, 0);
    BV6 = MK_6 (1, 0, 1, 0, 0, 1) => S4 (BV6) = MK_4 (1, 0, 1, 0);
    BV6 = MK_6 (1, 0, 1, 0, 1, 1) => S4 (BV6) = MK_4 (0, 0, 0, 1);
    BV6 = MK_6 (1, 0, 1, 1, 0, 1) => S4 (BV6) = MK_4 (1, 1, 0, 1);
    BV6 = MK_6 (1, 0, 1, 1, 1, 1) => S4 (BV6) = MK_4 (1, 0, 0, 0);
    BV6 = MK_6 (1, 1, 0, 0, 0, 1) => S4 (BV6) = MK_4 (1, 0, 0, 1);
    BV6 = MK_6 (1, 1, 0, 0, 1, 1) => S4 (BV6) = MK_4 (0, 1, 0, 0);
    BV6 = MK_6 (1, 1, 0, 1, 0, 1) => S4 (BV6) = MK_4 (0, 1, 0, 1);
    BV6 = MK_6 (1, 1, 0, 1, 1, 1) => S4 (BV6) = MK_4 (1, 0, 1, 1);
    BV6 = MK_6 (1, 1, 1, 0, 0, 1) => S4 (BV6) = MK_4 (1, 1, 0, 0);
    BV6 = MK_6 (1, 1, 1, 0, 1, 1) => S4 (BV6) = MK_4 (0, 1, 1, 1);
    BV6 = MK_6 (1, 1, 1, 1, 0, 1) => S4 (BV6) = MK_4 (0, 0, 1, 0);
    BV6 = MK_6 (1, 1, 1, 1, 1, 1) => S4 (BV6) = MK_4 (1, 1, 1, 0);
ofsort BIT4
    BV6 = MK_6 (0, 0, 0, 0, 0, 0) => S5 (BV6) = MK_4 (0, 0, 1, 0);
    BV6 = MK_6 (0, 0, 0, 0, 1, 0) => S5 (BV6) = MK_4 (1, 1, 0, 0);
    BV6 = MK_6 (0, 0, 0, 1, 0, 0) => S5 (BV6) = MK_4 (0, 1, 0, 0);
    BV6 = MK_6 (0, 0, 0, 1, 1, 0) => S5 (BV6) = MK_4 (0, 0, 0, 1);
    BV6 = MK_6 (0, 0, 1, 0, 0, 0) => S5 (BV6) = MK_4 (0, 1, 1, 1);
    BV6 = MK_6 (0, 0, 1, 0, 1, 0) => S5 (BV6) = MK_4 (1, 0, 1, 0);
    BV6 = MK_6 (0, 0, 1, 1, 0, 0) => S5 (BV6) = MK_4 (1, 0, 1, 1);
    BV6 = MK_6 (0, 0, 1, 1, 1, 0) => S5 (BV6) = MK_4 (0, 1, 1, 0);
    BV6 = MK_6 (0, 1, 0, 0, 0, 0) => S5 (BV6) = MK_4 (1, 0, 0, 0);
    BV6 = MK_6 (0, 1, 0, 0, 1, 0) => S5 (BV6) = MK_4 (0, 1, 0, 1);
    BV6 = MK_6 (0, 1, 0, 1, 0, 0) => S5 (BV6) = MK_4 (0, 0, 1, 1);
    BV6 = MK_6 (0, 1, 0, 1, 1, 0) => S5 (BV6) = MK_4 (1, 1, 1, 1);
    BV6 = MK_6 (0, 1, 1, 0, 0, 0) => S5 (BV6) = MK_4 (1, 1, 0, 1);
    BV6 = MK_6 (0, 1, 1, 0, 1, 0) => S5 (BV6) = MK_4 (0, 0, 0, 0);
    BV6 = MK_6 (0, 1, 1, 1, 0, 0) => S5 (BV6) = MK_4 (1, 1, 1, 0);
    BV6 = MK_6 (0, 1, 1, 1, 1, 0) => S5 (BV6) = MK_4 (1, 0, 0, 1);
    BV6 = MK_6 (0, 0, 0, 0, 0, 1) => S5 (BV6) = MK_4 (1, 1, 0, 0);
    BV6 = MK_6 (0, 0, 0, 0, 1, 1) => S5 (BV6) = MK_4 (1, 0, 1, 1);
    BV6 = MK_6 (0, 0, 0, 1, 0, 1) => S5 (BV6) = MK_4 (0, 0, 1, 0);
    BV6 = MK_6 (0, 0, 0, 1, 1, 1) => S5 (BV6) = MK_4 (1, 1, 0, 0);
    BV6 = MK_6 (0, 0, 1, 0, 0, 1) => S5 (BV6) = MK_4 (0, 1, 0, 0);
    BV6 = MK_6 (0, 0, 1, 0, 1, 1) => S5 (BV6) = MK_4 (0, 1, 1, 1);
    BV6 = MK_6 (0, 0, 1, 1, 0, 1) => S5 (BV6) = MK_4 (1, 1, 0, 1);
    BV6 = MK_6 (0, 0, 1, 1, 1, 1) => S5 (BV6) = MK_4 (0, 0, 0, 1);
    BV6 = MK_6 (0, 1, 0, 0, 0, 1) => S5 (BV6) = MK_4 (0, 1, 0, 1);
    BV6 = MK_6 (0, 1, 0, 0, 1, 1) => S5 (BV6) = MK_4 (0, 0, 0, 0);
    BV6 = MK_6 (0, 1, 0, 1, 0, 1) => S5 (BV6) = MK_4 (1, 1, 1, 1);
```

```
   BV6 = MK_6 (0, 1, 0, 1, 1, 1) => S5 (BV6) = MK_4 (1, 0, 1, 0);
   BV6 = MK_6 (0, 1, 1, 0, 0, 1) => S5 (BV6) = MK_4 (0, 0, 1, 1);
   BV6 = MK_6 (0, 1, 1, 0, 1, 1) => S5 (BV6) = MK_4 (1, 0, 0, 1);
   BV6 = MK_6 (0, 1, 1, 1, 0, 1) => S5 (BV6) = MK_4 (1, 0, 0, 0);
   BV6 = MK_6 (0, 1, 1, 1, 1, 1) => S5 (BV6) = MK_4 (0, 1, 1, 0);
   BV6 = MK_6 (1, 0, 0, 0, 0, 0) => S5 (BV6) = MK_4 (0, 1, 0, 0);
   BV6 = MK_6 (1, 0, 0, 0, 1, 0) => S5 (BV6) = MK_4 (0, 0, 1, 0);
   BV6 = MK_6 (1, 0, 0, 1, 0, 0) => S5 (BV6) = MK_4 (0, 0, 0, 1);
   BV6 = MK_6 (1, 0, 0, 1, 1, 0) => S5 (BV6) = MK_4 (1, 0, 1, 1);
   BV6 = MK_6 (1, 0, 1, 0, 0, 0) => S5 (BV6) = MK_4 (1, 0, 1, 0);
   BV6 = MK_6 (1, 0, 1, 0, 1, 0) => S5 (BV6) = MK_4 (1, 1, 0, 1);
   BV6 = MK_6 (1, 0, 1, 1, 0, 0) => S5 (BV6) = MK_4 (0, 1, 1, 1);
   BV6 = MK_6 (1, 0, 1, 1, 1, 0) => S5 (BV6) = MK_4 (1, 0, 0, 0);
   BV6 = MK_6 (1, 1, 0, 0, 0, 0) => S5 (BV6) = MK_4 (1, 1, 1, 1);
   BV6 = MK_6 (1, 1, 0, 0, 1, 0) => S5 (BV6) = MK_4 (1, 0, 0, 1);
   BV6 = MK_6 (1, 1, 0, 1, 0, 0) => S5 (BV6) = MK_4 (1, 1, 0, 0);
   BV6 = MK_6 (1, 1, 0, 1, 1, 0) => S5 (BV6) = MK_4 (0, 1, 0, 1);
   BV6 = MK_6 (1, 1, 1, 0, 0, 0) => S5 (BV6) = MK_4 (0, 1, 1, 0);
   BV6 = MK_6 (1, 1, 1, 0, 1, 0) => S5 (BV6) = MK_4 (0, 0, 1, 1);
   BV6 = MK_6 (1, 1, 1, 1, 0, 0) => S5 (BV6) = MK_4 (0, 0, 0, 0);
   BV6 = MK_6 (1, 1, 1, 1, 1, 0) => S5 (BV6) = MK_4 (1, 1, 1, 0);
   BV6 = MK_6 (1, 0, 0, 0, 0, 1) => S5 (BV6) = MK_4 (1, 0, 1, 1);
   BV6 = MK_6 (1, 0, 0, 0, 1, 1) => S5 (BV6) = MK_4 (1, 0, 0, 0);
   BV6 = MK_6 (1, 0, 0, 1, 0, 1) => S5 (BV6) = MK_4 (1, 1, 0, 0);
   BV6 = MK_6 (1, 0, 0, 1, 1, 1) => S5 (BV6) = MK_4 (0, 1, 1, 1);
   BV6 = MK_6 (1, 0, 1, 0, 0, 1) => S5 (BV6) = MK_4 (0, 0, 0, 1);
   BV6 = MK_6 (1, 0, 1, 0, 1, 1) => S5 (BV6) = MK_4 (1, 1, 1, 0);
   BV6 = MK_6 (1, 0, 1, 1, 0, 1) => S5 (BV6) = MK_4 (0, 0, 1, 0);
   BV6 = MK_6 (1, 0, 1, 1, 1, 1) => S5 (BV6) = MK_4 (1, 1, 0, 1);
   BV6 = MK_6 (1, 1, 0, 0, 0, 1) => S5 (BV6) = MK_4 (0, 1, 1, 0);
   BV6 = MK_6 (1, 1, 0, 0, 1, 1) => S5 (BV6) = MK_4 (1, 1, 1, 1);
   BV6 = MK_6 (1, 1, 0, 1, 0, 1) => S5 (BV6) = MK_4 (0, 0, 0, 0);
   BV6 = MK_6 (1, 1, 0, 1, 1, 1) => S5 (BV6) = MK_4 (1, 0, 0, 1);
   BV6 = MK_6 (1, 1, 1, 0, 0, 1) => S5 (BV6) = MK_4 (1, 0, 1, 0);
   BV6 = MK_6 (1, 1, 1, 0, 1, 1) => S5 (BV6) = MK_4 (0, 1, 0, 0);
   BV6 = MK_6 (1, 1, 1, 1, 0, 1) => S5 (BV6) = MK_4 (0, 1, 0, 1);
   BV6 = MK_6 (1, 1, 1, 1, 1, 1) => S5 (BV6) = MK_4 (0, 0, 1, 1);
ofsort BIT4
   BV6 = MK_6 (0, 0, 0, 0, 0, 0) => S6 (BV6) = MK_4 (1, 1, 0, 0);
   BV6 = MK_6 (0, 0, 0, 0, 1, 0) => S6 (BV6) = MK_4 (0, 0, 0, 1);
   BV6 = MK_6 (0, 0, 0, 1, 0, 0) => S6 (BV6) = MK_4 (1, 0, 1, 0);
   BV6 = MK_6 (0, 0, 0, 1, 1, 0) => S6 (BV6) = MK_4 (1, 1, 1, 1);
   BV6 = MK_6 (0, 0, 1, 0, 0, 0) => S6 (BV6) = MK_4 (1, 0, 0, 1);
   BV6 = MK_6 (0, 0, 1, 0, 1, 0) => S6 (BV6) = MK_4 (0, 0, 1, 0);
   BV6 = MK_6 (0, 0, 1, 1, 0, 0) => S6 (BV6) = MK_4 (0, 1, 1, 0);
   BV6 = MK_6 (0, 0, 1, 1, 1, 0) => S6 (BV6) = MK_4 (1, 0, 0, 0);
   BV6 = MK_6 (0, 1, 0, 0, 0, 0) => S6 (BV6) = MK_4 (0, 0, 0, 0);
   BV6 = MK_6 (0, 1, 0, 0, 1, 0) => S6 (BV6) = MK_4 (1, 1, 0, 1);
   BV6 = MK_6 (0, 1, 0, 1, 0, 0) => S6 (BV6) = MK_4 (0, 0, 1, 1);
   BV6 = MK_6 (0, 1, 0, 1, 1, 0) => S6 (BV6) = MK_4 (0, 1, 0, 0);
   BV6 = MK_6 (0, 1, 1, 0, 0, 0) => S6 (BV6) = MK_4 (1, 1, 1, 0);
   BV6 = MK_6 (0, 1, 1, 0, 1, 0) => S6 (BV6) = MK_4 (0, 1, 1, 1);
```

```
    BV6 = MK_6 (0, 1, 1, 1, 0, 0) => S6 (BV6) = MK_4 (0, 1, 0, 1);
    BV6 = MK_6 (0, 1, 1, 1, 1, 0) => S6 (BV6) = MK_4 (1, 0, 1, 1);
    BV6 = MK_6 (0, 0, 0, 0, 0, 1) => S6 (BV6) = MK_4 (1, 0, 1, 0);
    BV6 = MK_6 (0, 0, 0, 0, 1, 1) => S6 (BV6) = MK_4 (1, 1, 1, 1);
    BV6 = MK_6 (0, 0, 0, 1, 0, 1) => S6 (BV6) = MK_4 (0, 1, 0, 0);
    BV6 = MK_6 (0, 0, 0, 1, 1, 1) => S6 (BV6) = MK_4 (0, 0, 1, 0);
    BV6 = MK_6 (0, 0, 1, 0, 0, 1) => S6 (BV6) = MK_4 (0, 1, 1, 1);
    BV6 = MK_6 (0, 0, 1, 0, 1, 1) => S6 (BV6) = MK_4 (1, 1, 0, 0);
    BV6 = MK_6 (0, 0, 1, 1, 0, 1) => S6 (BV6) = MK_4 (1, 0, 0, 1);
    BV6 = MK_6 (0, 0, 1, 1, 1, 1) => S6 (BV6) = MK_4 (0, 1, 0, 1);
    BV6 = MK_6 (0, 1, 0, 0, 0, 1) => S6 (BV6) = MK_4 (0, 1, 1, 0);
    BV6 = MK_6 (0, 1, 0, 0, 1, 1) => S6 (BV6) = MK_4 (0, 0, 0, 1);
    BV6 = MK_6 (0, 1, 0, 1, 0, 1) => S6 (BV6) = MK_4 (1, 1, 0, 1);
    BV6 = MK_6 (0, 1, 0, 1, 1, 1) => S6 (BV6) = MK_4 (1, 1, 1, 0);
    BV6 = MK_6 (0, 1, 1, 0, 0, 1) => S6 (BV6) = MK_4 (0, 0, 0, 0);
    BV6 = MK_6 (0, 1, 1, 0, 1, 1) => S6 (BV6) = MK_4 (1, 0, 1, 1);
    BV6 = MK_6 (0, 1, 1, 1, 0, 1) => S6 (BV6) = MK_4 (0, 0, 1, 1);
    BV6 = MK_6 (0, 1, 1, 1, 1, 1) => S6 (BV6) = MK_4 (1, 0, 0, 0);
    BV6 = MK_6 (1, 0, 0, 0, 0, 0) => S6 (BV6) = MK_4 (1, 0, 0, 1);
    BV6 = MK_6 (1, 0, 0, 0, 1, 0) => S6 (BV6) = MK_4 (1, 1, 1, 0);
    BV6 = MK_6 (1, 0, 0, 1, 0, 0) => S6 (BV6) = MK_4 (1, 1, 1, 1);
    BV6 = MK_6 (1, 0, 0, 1, 1, 0) => S6 (BV6) = MK_4 (0, 1, 0, 1);
    BV6 = MK_6 (1, 0, 1, 0, 0, 0) => S6 (BV6) = MK_4 (0, 0, 1, 0);
    BV6 = MK_6 (1, 0, 1, 0, 1, 0) => S6 (BV6) = MK_4 (1, 0, 0, 0);
    BV6 = MK_6 (1, 0, 1, 1, 0, 0) => S6 (BV6) = MK_4 (1, 1, 0, 0);
    BV6 = MK_6 (1, 0, 1, 1, 1, 0) => S6 (BV6) = MK_4 (0, 0, 1, 1);
    BV6 = MK_6 (1, 1, 0, 0, 0, 0) => S6 (BV6) = MK_4 (0, 1, 1, 1);
    BV6 = MK_6 (1, 1, 0, 0, 1, 0) => S6 (BV6) = MK_4 (0, 0, 0, 0);
    BV6 = MK_6 (1, 1, 0, 1, 0, 0) => S6 (BV6) = MK_4 (0, 1, 0, 0);
    BV6 = MK_6 (1, 1, 0, 1, 1, 0) => S6 (BV6) = MK_4 (1, 0, 1, 0);
    BV6 = MK_6 (1, 1, 1, 0, 0, 0) => S6 (BV6) = MK_4 (0, 0, 0, 1);
    BV6 = MK_6 (1, 1, 1, 0, 1, 0) => S6 (BV6) = MK_4 (1, 1, 0, 1);
    BV6 = MK_6 (1, 1, 1, 1, 0, 0) => S6 (BV6) = MK_4 (1, 0, 1, 1);
    BV6 = MK_6 (1, 1, 1, 1, 1, 0) => S6 (BV6) = MK_4 (0, 1, 1, 0);
    BV6 = MK_6 (1, 0, 0, 0, 0, 1) => S6 (BV6) = MK_4 (0, 1, 0, 0);
    BV6 = MK_6 (1, 0, 0, 0, 1, 1) => S6 (BV6) = MK_4 (0, 0, 1, 1);
    BV6 = MK_6 (1, 0, 0, 1, 0, 1) => S6 (BV6) = MK_4 (0, 0, 1, 0);
    BV6 = MK_6 (1, 0, 0, 1, 1, 1) => S6 (BV6) = MK_4 (1, 1, 0, 0);
    BV6 = MK_6 (1, 0, 1, 0, 0, 1) => S6 (BV6) = MK_4 (1, 0, 0, 1);
    BV6 = MK_6 (1, 0, 1, 0, 1, 1) => S6 (BV6) = MK_4 (0, 1, 0, 1);
    BV6 = MK_6 (1, 0, 1, 1, 0, 1) => S6 (BV6) = MK_4 (1, 1, 1, 1);
    BV6 = MK_6 (1, 0, 1, 1, 1, 1) => S6 (BV6) = MK_4 (1, 0, 1, 0);
    BV6 = MK_6 (1, 1, 0, 0, 0, 1) => S6 (BV6) = MK_4 (1, 0, 1, 1);
    BV6 = MK_6 (1, 1, 0, 0, 1, 1) => S6 (BV6) = MK_4 (1, 1, 1, 0);
    BV6 = MK_6 (1, 1, 0, 1, 0, 1) => S6 (BV6) = MK_4 (0, 0, 0, 1);
    BV6 = MK_6 (1, 1, 0, 1, 1, 1) => S6 (BV6) = MK_4 (0, 1, 1, 1);
    BV6 = MK_6 (1, 1, 1, 0, 0, 1) => S6 (BV6) = MK_4 (0, 1, 1, 0);
    BV6 = MK_6 (1, 1, 1, 0, 1, 1) => S6 (BV6) = MK_4 (0, 0, 0, 0);
    BV6 = MK_6 (1, 1, 1, 1, 0, 1) => S6 (BV6) = MK_4 (1, 0, 0, 0);
    BV6 = MK_6 (1, 1, 1, 1, 1, 1) => S6 (BV6) = MK_4 (1, 1, 0, 1);
ofsort BIT4
    BV6 = MK_6 (0, 0, 0, 0, 0, 0) => S7 (BV6) = MK_4 (0, 1, 0, 0);
```

```
BV6 = MK_6 (0, 0, 0, 0, 1, 0) => S7 (BV6) = MK_4 (1, 0, 1, 1);
BV6 = MK_6 (0, 0, 0, 1, 0, 0) => S7 (BV6) = MK_4 (0, 0, 1, 0);
BV6 = MK_6 (0, 0, 0, 1, 1, 0) => S7 (BV6) = MK_4 (1, 1, 1, 0);
BV6 = MK_6 (0, 0, 1, 0, 0, 0) => S7 (BV6) = MK_4 (1, 1, 1, 1);
BV6 = MK_6 (0, 0, 1, 0, 1, 0) => S7 (BV6) = MK_4 (0, 0, 0, 0);
BV6 = MK_6 (0, 0, 1, 1, 0, 0) => S7 (BV6) = MK_4 (1, 0, 0, 0);
BV6 = MK_6 (0, 0, 1, 1, 1, 0) => S7 (BV6) = MK_4 (1, 1, 0, 1);
BV6 = MK_6 (0, 1, 0, 0, 0, 0) => S7 (BV6) = MK_4 (0, 0, 1, 1);
BV6 = MK_6 (0, 1, 0, 0, 1, 0) => S7 (BV6) = MK_4 (1, 1, 0, 0);
BV6 = MK_6 (0, 1, 0, 1, 0, 0) => S7 (BV6) = MK_4 (1, 0, 0, 1);
BV6 = MK_6 (0, 1, 0, 1, 1, 0) => S7 (BV6) = MK_4 (0, 1, 1, 1);
BV6 = MK_6 (0, 1, 1, 0, 0, 0) => S7 (BV6) = MK_4 (0, 1, 0, 1);
BV6 = MK_6 (0, 1, 1, 0, 1, 0) => S7 (BV6) = MK_4 (1, 0, 1, 0);
BV6 = MK_6 (0, 1, 1, 1, 0, 0) => S7 (BV6) = MK_4 (0, 1, 1, 0);
BV6 = MK_6 (0, 1, 1, 1, 1, 0) => S7 (BV6) = MK_4 (0, 0, 0, 1);
BV6 = MK_6 (0, 0, 0, 0, 0, 1) => S7 (BV6) = MK_4 (1, 1, 0, 1);
BV6 = MK_6 (0, 0, 0, 0, 1, 1) => S7 (BV6) = MK_4 (0, 0, 0, 0);
BV6 = MK_6 (0, 0, 0, 1, 0, 1) => S7 (BV6) = MK_4 (1, 0, 1, 1);
BV6 = MK_6 (0, 0, 0, 1, 1, 1) => S7 (BV6) = MK_4 (0, 1, 1, 1);
BV6 = MK_6 (0, 0, 1, 0, 0, 1) => S7 (BV6) = MK_4 (0, 1, 0, 0);
BV6 = MK_6 (0, 0, 1, 0, 1, 1) => S7 (BV6) = MK_4 (1, 0, 0, 1);
BV6 = MK_6 (0, 0, 1, 1, 0, 1) => S7 (BV6) = MK_4 (0, 0, 0, 1);
BV6 = MK_6 (0, 0, 1, 1, 1, 1) => S7 (BV6) = MK_4 (1, 0, 1, 0);
BV6 = MK_6 (0, 1, 0, 0, 0, 1) => S7 (BV6) = MK_4 (1, 1, 1, 0);
BV6 = MK_6 (0, 1, 0, 0, 1, 1) => S7 (BV6) = MK_4 (0, 0, 1, 1);
BV6 = MK_6 (0, 1, 0, 1, 0, 1) => S7 (BV6) = MK_4 (0, 1, 0, 1);
BV6 = MK_6 (0, 1, 0, 1, 1, 1) => S7 (BV6) = MK_4 (1, 1, 0, 0);
BV6 = MK_6 (0, 1, 1, 0, 0, 1) => S7 (BV6) = MK_4 (0, 0, 1, 0);
BV6 = MK_6 (0, 1, 1, 0, 1, 1) => S7 (BV6) = MK_4 (1, 1, 1, 1);
BV6 = MK_6 (0, 1, 1, 1, 0, 1) => S7 (BV6) = MK_4 (1, 0, 0, 0);
BV6 = MK_6 (0, 1, 1, 1, 1, 1) => S7 (BV6) = MK_4 (0, 1, 1, 0);
BV6 = MK_6 (1, 0, 0, 0, 0, 0) => S7 (BV6) = MK_4 (0, 0, 0, 1);
BV6 = MK_6 (1, 0, 0, 0, 1, 0) => S7 (BV6) = MK_4 (0, 1, 0, 0);
BV6 = MK_6 (1, 0, 0, 1, 0, 0) => S7 (BV6) = MK_4 (1, 0, 1, 1);
BV6 = MK_6 (1, 0, 0, 1, 1, 0) => S7 (BV6) = MK_4 (1, 1, 0, 1);
BV6 = MK_6 (1, 0, 1, 0, 0, 0) => S7 (BV6) = MK_4 (1, 1, 0, 0);
BV6 = MK_6 (1, 0, 1, 0, 1, 0) => S7 (BV6) = MK_4 (0, 0, 1, 1);
BV6 = MK_6 (1, 0, 1, 1, 0, 0) => S7 (BV6) = MK_4 (0, 1, 1, 1);
BV6 = MK_6 (1, 0, 1, 1, 1, 0) => S7 (BV6) = MK_4 (1, 1, 1, 0);
BV6 = MK_6 (1, 1, 0, 0, 0, 0) => S7 (BV6) = MK_4 (1, 0, 1, 0);
BV6 = MK_6 (1, 1, 0, 0, 1, 0) => S7 (BV6) = MK_4 (1, 1, 1, 1);
BV6 = MK_6 (1, 1, 0, 1, 0, 0) => S7 (BV6) = MK_4 (0, 1, 1, 0);
BV6 = MK_6 (1, 1, 0, 1, 1, 0) => S7 (BV6) = MK_4 (1, 0, 0, 0);
BV6 = MK_6 (1, 1, 1, 0, 0, 0) => S7 (BV6) = MK_4 (0, 0, 0, 0);
BV6 = MK_6 (1, 1, 1, 0, 1, 0) => S7 (BV6) = MK_4 (0, 1, 0, 1);
BV6 = MK_6 (1, 1, 1, 1, 0, 0) => S7 (BV6) = MK_4 (1, 0, 0, 1);
BV6 = MK_6 (1, 1, 1, 1, 1, 0) => S7 (BV6) = MK_4 (0, 0, 1, 0);
BV6 = MK_6 (1, 0, 0, 0, 0, 1) => S7 (BV6) = MK_4 (0, 1, 1, 0);
BV6 = MK_6 (1, 0, 0, 0, 1, 1) => S7 (BV6) = MK_4 (1, 0, 1, 1);
BV6 = MK_6 (1, 0, 0, 1, 0, 1) => S7 (BV6) = MK_4 (1, 1, 0, 1);
BV6 = MK_6 (1, 0, 0, 1, 1, 1) => S7 (BV6) = MK_4 (1, 0, 0, 0);
BV6 = MK_6 (1, 0, 1, 0, 0, 1) => S7 (BV6) = MK_4 (0, 0, 0, 1);
```

```
    BV6 = MK_6 (1, 0, 1, 0, 1, 1) => S7 (BV6) = MK_4 (0, 1, 0, 0);
    BV6 = MK_6 (1, 0, 1, 1, 0, 1) => S7 (BV6) = MK_4 (1, 0, 1, 0);
    BV6 = MK_6 (1, 0, 1, 1, 1, 1) => S7 (BV6) = MK_4 (0, 1, 1, 1);
    BV6 = MK_6 (1, 1, 0, 0, 0, 1) => S7 (BV6) = MK_4 (1, 0, 0, 1);
    BV6 = MK_6 (1, 1, 0, 0, 1, 1) => S7 (BV6) = MK_4 (0, 1, 0, 1);
    BV6 = MK_6 (1, 1, 0, 1, 0, 1) => S7 (BV6) = MK_4 (0, 0, 0, 0);
    BV6 = MK_6 (1, 1, 0, 1, 1, 1) => S7 (BV6) = MK_4 (1, 1, 1, 1);
    BV6 = MK_6 (1, 1, 1, 0, 0, 1) => S7 (BV6) = MK_4 (1, 1, 1, 0);
    BV6 = MK_6 (1, 1, 1, 0, 1, 1) => S7 (BV6) = MK_4 (0, 0, 1, 0);
    BV6 = MK_6 (1, 1, 1, 1, 0, 1) => S7 (BV6) = MK_4 (0, 0, 1, 1);
    BV6 = MK_6 (1, 1, 1, 1, 1, 1) => S7 (BV6) = MK_4 (1, 1, 0, 0);
ofsort BIT4
    BV6 = MK_6 (0, 0, 0, 0, 0, 0) => S8 (BV6) = MK_4 (1, 1, 0, 1);
    BV6 = MK_6 (0, 0, 0, 0, 1, 0) => S8 (BV6) = MK_4 (0, 0, 1, 0);
    BV6 = MK_6 (0, 0, 0, 1, 0, 0) => S8 (BV6) = MK_4 (1, 0, 0, 0);
    BV6 = MK_6 (0, 0, 0, 1, 1, 0) => S8 (BV6) = MK_4 (0, 1, 0, 0);
    BV6 = MK_6 (0, 0, 1, 0, 0, 0) => S8 (BV6) = MK_4 (0, 1, 1, 0);
    BV6 = MK_6 (0, 0, 1, 0, 1, 0) => S8 (BV6) = MK_4 (1, 1, 1, 1);
    BV6 = MK_6 (0, 0, 1, 1, 0, 0) => S8 (BV6) = MK_4 (1, 0, 1, 1);
    BV6 = MK_6 (0, 0, 1, 1, 1, 0) => S8 (BV6) = MK_4 (0, 0, 0, 1);
    BV6 = MK_6 (0, 1, 0, 0, 0, 0) => S8 (BV6) = MK_4 (1, 0, 1, 0);
    BV6 = MK_6 (0, 1, 0, 0, 1, 0) => S8 (BV6) = MK_4 (1, 0, 0, 1);
    BV6 = MK_6 (0, 1, 0, 1, 0, 0) => S8 (BV6) = MK_4 (0, 0, 1, 1);
    BV6 = MK_6 (0, 1, 0, 1, 1, 0) => S8 (BV6) = MK_4 (1, 1, 1, 0);
    BV6 = MK_6 (0, 1, 1, 0, 0, 0) => S8 (BV6) = MK_4 (0, 1, 0, 1);
    BV6 = MK_6 (0, 1, 1, 0, 1, 0) => S8 (BV6) = MK_4 (0, 0, 0, 0);
    BV6 = MK_6 (0, 1, 1, 1, 0, 0) => S8 (BV6) = MK_4 (1, 1, 0, 0);
    BV6 = MK_6 (0, 1, 1, 1, 1, 0) => S8 (BV6) = MK_4 (0, 1, 1, 1);
    BV6 = MK_6 (0, 0, 0, 0, 0, 1) => S8 (BV6) = MK_4 (0, 0, 0, 1);
    BV6 = MK_6 (0, 0, 0, 0, 1, 1) => S8 (BV6) = MK_4 (1, 1, 1, 1);
    BV6 = MK_6 (0, 0, 0, 1, 0, 1) => S8 (BV6) = MK_4 (1, 1, 0, 1);
    BV6 = MK_6 (0, 0, 0, 1, 1, 1) => S8 (BV6) = MK_4 (1, 0, 0, 0);
    BV6 = MK_6 (0, 0, 1, 0, 0, 1) => S8 (BV6) = MK_4 (1, 0, 1, 0);
    BV6 = MK_6 (0, 0, 1, 0, 1, 1) => S8 (BV6) = MK_4 (0, 0, 1, 1);
    BV6 = MK_6 (0, 0, 1, 1, 0, 1) => S8 (BV6) = MK_4 (0, 1, 1, 1);
    BV6 = MK_6 (0, 0, 1, 1, 1, 1) => S8 (BV6) = MK_4 (0, 1, 0, 0);
    BV6 = MK_6 (0, 1, 0, 0, 0, 1) => S8 (BV6) = MK_4 (1, 1, 0, 0);
    BV6 = MK_6 (0, 1, 0, 0, 1, 1) => S8 (BV6) = MK_4 (0, 1, 0, 1);
    BV6 = MK_6 (0, 1, 0, 1, 0, 1) => S8 (BV6) = MK_4 (0, 1, 1, 0);
    BV6 = MK_6 (0, 1, 0, 1, 1, 1) => S8 (BV6) = MK_4 (1, 0, 1, 1);
    BV6 = MK_6 (0, 1, 1, 0, 0, 1) => S8 (BV6) = MK_4 (0, 0, 0, 0);
    BV6 = MK_6 (0, 1, 1, 0, 1, 1) => S8 (BV6) = MK_4 (1, 1, 1, 0);
    BV6 = MK_6 (0, 1, 1, 1, 0, 1) => S8 (BV6) = MK_4 (1, 0, 0, 1);
    BV6 = MK_6 (0, 1, 1, 1, 1, 1) => S8 (BV6) = MK_4 (0, 0, 1, 0);
    BV6 = MK_6 (1, 0, 0, 0, 0, 0) => S8 (BV6) = MK_4 (0, 1, 1, 1);
    BV6 = MK_6 (1, 0, 0, 0, 1, 0) => S8 (BV6) = MK_4 (1, 0, 1, 1);
    BV6 = MK_6 (1, 0, 0, 1, 0, 0) => S8 (BV6) = MK_4 (0, 1, 0, 0);
    BV6 = MK_6 (1, 0, 0, 1, 1, 0) => S8 (BV6) = MK_4 (0, 0, 0, 1);
    BV6 = MK_6 (1, 0, 1, 0, 0, 0) => S8 (BV6) = MK_4 (1, 0, 0, 1);
    BV6 = MK_6 (1, 0, 1, 0, 1, 0) => S8 (BV6) = MK_4 (1, 1, 0, 0);
    BV6 = MK_6 (1, 0, 1, 1, 0, 0) => S8 (BV6) = MK_4 (1, 1, 1, 0);
    BV6 = MK_6 (1, 0, 1, 1, 1, 0) => S8 (BV6) = MK_4 (0, 0, 1, 0);
```

```
        BV6 = MK_6 (1, 1, 0, 0, 0, 0) => S8 (BV6) = MK_4 (0, 0, 0, 0);
        BV6 = MK_6 (1, 1, 0, 0, 1, 0) => S8 (BV6) = MK_4 (0, 1, 1, 0);
        BV6 = MK_6 (1, 1, 0, 1, 0, 0) => S8 (BV6) = MK_4 (1, 0, 1, 0);
        BV6 = MK_6 (1, 1, 0, 1, 1, 0) => S8 (BV6) = MK_4 (1, 1, 0, 1);
        BV6 = MK_6 (1, 1, 1, 0, 0, 0) => S8 (BV6) = MK_4 (1, 1, 1, 1);
        BV6 = MK_6 (1, 1, 1, 0, 1, 0) => S8 (BV6) = MK_4 (0, 0, 1, 1);
        BV6 = MK_6 (1, 1, 1, 1, 0, 0) => S8 (BV6) = MK_4 (0, 1, 0, 1);
        BV6 = MK_6 (1, 1, 1, 1, 1, 0) => S8 (BV6) = MK_4 (1, 0, 0, 0);
        BV6 = MK_6 (1, 0, 0, 0, 0, 1) => S8 (BV6) = MK_4 (0, 0, 1, 0);
        BV6 = MK_6 (1, 0, 0, 0, 1, 1) => S8 (BV6) = MK_4 (0, 0, 0, 1);
        BV6 = MK_6 (1, 0, 0, 1, 0, 1) => S8 (BV6) = MK_4 (1, 1, 1, 0);
        BV6 = MK_6 (1, 0, 0, 1, 1, 1) => S8 (BV6) = MK_4 (0, 1, 1, 1);
        BV6 = MK_6 (1, 0, 1, 0, 0, 1) => S8 (BV6) = MK_4 (0, 1, 0, 0);
        BV6 = MK_6 (1, 0, 1, 0, 1, 1) => S8 (BV6) = MK_4 (1, 0, 1, 0);
        BV6 = MK_6 (1, 0, 1, 1, 0, 1) => S8 (BV6) = MK_4 (1, 0, 0, 0);
        BV6 = MK_6 (1, 0, 1, 1, 1, 1) => S8 (BV6) = MK_4 (1, 1, 0, 1);
        BV6 = MK_6 (1, 1, 0, 0, 0, 1) => S8 (BV6) = MK_4 (1, 1, 1, 1);
        BV6 = MK_6 (1, 1, 0, 0, 1, 1) => S8 (BV6) = MK_4 (1, 1, 0, 0);
        BV6 = MK_6 (1, 1, 0, 1, 0, 1) => S8 (BV6) = MK_4 (1, 0, 0, 1);
        BV6 = MK_6 (1, 1, 0, 1, 1, 1) => S8 (BV6) = MK_4 (0, 0, 0, 0);
        BV6 = MK_6 (1, 1, 1, 0, 0, 1) => S8 (BV6) = MK_4 (0, 0, 1, 1);
        BV6 = MK_6 (1, 1, 1, 0, 1, 1) => S8 (BV6) = MK_4 (0, 1, 0, 1);
        BV6 = MK_6 (1, 1, 1, 1, 0, 1) => S8 (BV6) = MK_4 (0, 1, 1, 0);
        BV6 = MK_6 (1, 1, 1, 1, 1, 1) => S8 (BV6) = MK_4 (1, 0, 1, 1);
endtype
```

B.6 Library CONTROLLER

Process CONTROLLER is responsible for the generation of the appropriate commands to the shift register of the key path as well as the four multiplexers of the data and key paths. It consists of a parallel composition of six processes: one process per controlled block (multiplexer or shift register) plus a process counting the iterations.

```
process CONTROLLER [CRYPT,
                    CTRL_CL, CTRL_CR,
                    CTRL_CK, CTRL_SHIFT, CTRL_DK] : noexit :=
   hide CS in
      CTRL_MUX_LR [CS, CTRL_CL]
      |[CS]|
      CTRL_MUX_LR [CS, CTRL_CR]
      |[CS]|
      CTRL_MUX_K [CS, CTRL_CK]
      |[CS]|
      CTRL_SHIFT [CRYPT, CS, CTRL_SHIFT]
      |[CS]|
      CTRL_DMUX_K [CS, CTRL_DK]
      |[CS]|
      COUNTER [CS] (0 of ITERATION)
endproc
```

```
(* ------------------------------------------------------------------------ *)
(* COUNTER counts the iterations *)

process COUNTER [CS] (IT:ITERATION) : noexit :=
   CS !IT;
      COUNTER [CS] (NEXT (IT))
endproc

(* ------------------------------------------------------------------------ *)
(* CTRL_MUX_LR generates 1 F, then 14 Ns, and finally 1 L to control one
 * of the two multiplexers in the data path *)

process CTRL_MUX_LR [CS, CTRL] : noexit :=
   CS ?IT:ITERATION;
      CTRL !MUX_DATA(IT);
         CTRL_MUX_LR [CS, CTRL]
endproc

(* ------------------------------------------------------------------------ *)
(* CTRL_MUX_K generates 1 F and 15 N to control the key path multiplexer *)

process CTRL_MUX_K [CS, CTRL] : noexit :=
   CS ?IT:ITERATION;
      (
         [not (LAST (IT))] ->
            CTRL !MUX_K(IT);
               CTRL_MUX_K [CS, CTRL]
         []
         [LAST (IT)] ->
            CTRL_MUX_K [CS, CTRL]
      )
endproc

(* ------------------------------------------------------------------------ *)
(* CTRL_SHIFT controls the shift register *)

process CTRL_SHIFT [CRYPT, CS, CTRL] : noexit :=
   CRYPT ?CRYPT:BOOL;
      CTRL_SHIFT_LOOP [CRYPT, CS, CTRL] (CRYPT)
where
   process CTRL_SHIFT_LOOP [CRYPT, CS, CTRL] (CRYPT:BOOL) : noexit :=
      CS ?IT:ITERATION;
         (
            [not (LAST (IT))] ->
               CTRL !SHIFT_CODE (IT, CRYPT);
                  CTRL_SHIFT_LOOP [CRYPT, CS, CTRL] (CRYPT)
            []
            [LAST (IT)] ->
               CTRL_SHIFT [CRYPT, CS, CTRL]
         )
   endproc
endproc
```

```
(* ------------------------------------------------------------------------ *)
(* CTRL_DMUX_K generates 15 N and 1 L to control the double multiplexer *)

process CTRL_DMUX_K [CS, CTRL] : noexit :=
   CS ?IT:ITERATION;
      (
         [not (LAST (IT))] ->
            CTRL !DMUX_K(IT);
               CTRL_DMUX_K [CS, CTRL]
         []
         [LAST (IT)] ->
            CTRL_DMUX_K [CS, CTRL]
      )
endproc
```

B.7 Library KEY_PATH

Process KEY_PATH describes the architecture of the key path, generating the sixteen subkeys required for the sixteen iterations.

```
process KEY_PATH [KEY, SUBKEY, CTRL_CK, CTRL_SHIFT, CTRL_DK] : noexit :=
   hide FIRST_K, INTERMEDIATE_K in
      PC1 [KEY, FIRST_K]
      |[FIRST_K]|
      (
         (
            hide K, KKK, SK in
               (
                  SHIFT_REGISTER [CTRL_SHIFT, K, SK]
                  |[SK]|
                  DUPLICATE_K [CTRL_DK, SK, INTERMEDIATE_K, KKK]
               )
               |[K, KKK]|
               CHOOSE_K [CTRL_CK, FIRST_K, KKK, K]
         )
         |[INTERMEDIATE_K]|
         PC2 [INTERMEDIATE_K, SUBKEY]
      )

where

(* ------------------------------------------------------------------------ *)
(* PC1 breaks the initial 64 bit key into a 56-bit vector *)

   process PC1 [KEY, FIRST_K] : noexit :=
      KEY ?K64:BIT64;
         FIRST_K !PC1(K64);
            PC1 [KEY, FIRST_K]
   endproc
```

```
(* ------------------------------------------------------------------------ *)
(* SHIFT_REGISTER performs, depending on the iteration, one or two shifts
 * to the left or right shift(s) of a 56 bit word *)

   process SHIFT_REGISTER [CTRL, INPUT, OUTPUT] : noexit :=
      (
         CTRL ?CTRL:SHIFT;
            exit (CTRL, any BIT56)
         |||
         INPUT ?I56:BIT56;
            exit (any SHIFT, I56)
      )
      >> accept CTRL : SHIFT, I56 : BIT56 in
      (
         [CTRL == NO] ->
            OUTPUT !I56;
               SHIFT_REGISTER [CTRL, INPUT, OUTPUT]
         []
         [CTRL == LS1] ->
            OUTPUT !LSHIFT(I56);
               SHIFT_REGISTER [CTRL, INPUT, OUTPUT]
         []
         [CTRL == LS2] ->
            OUTPUT !LSHIFT(LSHIFT(I56));
               SHIFT_REGISTER [CTRL, INPUT, OUTPUT]
         []
         [CTRL == RS1] ->
            OUTPUT !RSHIFT(I56);
               SHIFT_REGISTER [CTRL, INPUT, OUTPUT]
         []
         [CTRL == RS2] ->
            OUTPUT !RSHIFT(RSHIFT(I56));
               SHIFT_REGISTER [CTRL, INPUT, OUTPUT]
      )
   endproc

(* ------------------------------------------------------------------------ *)
(* CHOOSE_K closes the loop in the key path, by redirecting the input on
 * INPUT to OUTPUT, but for the first iteration where the original key is
 * read on FIRST_IN *)

   process CHOOSE_K [CTRL, FIRST_IN, INPUT, OUTPUT] : noexit :=
      CTRL ?CTRL:PHASE;
         (
            [CTRL == F] ->
               FIRST_IN ?I56:BIT56;
                  OUTPUT_K [CTRL, FIRST_IN, INPUT, OUTPUT] (I56)
            []
            [CTRL == N] ->
               INPUT ?I56:BIT56;
                  OUTPUT_K [CTRL, FIRST_IN, INPUT, OUTPUT] (I56)
```

```
        )
   where
      process OUTPUT_K [CTRL, FIRST_IN, INPUT, OUTPUT]
                        (B56 : BIT56) : noexit :=
         OUTPUT !B56;
            CHOOSE_K [CTRL, FIRST_IN, INPUT, OUTPUT]
      endproc
   endproc

(* ------------------------------------------------------------------------ *)
(* DUPLICATE_K reads a 56-bit vector from INPUT and outputs it to OUTPUT1
 * and OUTPUT2, but for the last iteration, where it outputs only to
 * OUTPUT1 *)

   process DUPLICATE_K [CTRL, INPUT, OUTPUT1, OUTPUT2] : noexit :=
      (
         CTRL ?CTRL:PHASE;
            exit (CTRL, any BIT56)
         |||
         INPUT ?I56:BIT56;
            exit (any PHASE, I56)
      )
      >> accept CTRL : PHASE, I56 : BIT56 in
      (
         [CTRL == N] ->
            (
               (
                  OUTPUT1 !I56;
                     exit
                  |||
                  OUTPUT2 !I56;
                     exit
               )
               >>
               DUPLICATE_K [CTRL, INPUT, OUTPUT1, OUTPUT2]
            )
         []
         [CTRL == L] ->
            OUTPUT1 !I56;
               DUPLICATE_K [CTRL, INPUT, OUTPUT1, OUTPUT2]
      )
   endproc

(* ------------------------------------------------------------------------ *)
(* PC2 applies PC2 to generate the current sub key *)

   process PC2 [KK, SUBKEY] : noexit :=
      KK ?I56:BIT56;
         SUBKEY !PC2(I56);
            PC2 [KK, SUBKEY]
   endproc
```

```
endproc

(* ------------------------------------------------------------------------------ *)
```

B.8 Library CIPHER

The processes of library CIPHER.lib implement Figure 2 of the standard [17], i.e., they compute

$$P\Big(S_i\big(E(R_i)+K_i\big)\Big)$$

where K_i is the i-th subkey and R_i is the 32-bit vector handled by the i-th iteration of the DES.

```
process CIPHER [K, R, PX] : noexit :=
   hide ER,
        IS1, IS2, IS3, IS4, IS5, IS6, IS7, IS8,
        SO1, SO2, SO3, SO4, SO5, SO6, SO7, SO8
   in
      (
         E [R, ER]
         |[ER]|
         XOR_48 [ER, K, IS1, IS2, IS3, IS4, IS5, IS6, IS7, IS8]
      )
      |[IS1, IS2, IS3, IS4, IS5, IS6, IS7, IS8]|
      (
         S1 [IS1, SO1]
         |||
         S2 [IS2, SO2]
         |||
         S3 [IS3, SO3]
         |||
         S4 [IS4, SO4]
         |||
         S5 [IS5, SO5]
         |||
         S6 [IS6, SO6]
         |||
         S7 [IS7, SO7]
         |||
         S8 [IS8, SO8]
      )
      |[SO1, SO2, SO3, SO4, SO5, SO6, SO7, SO8]|
      P [SO1, SO2, SO3, SO4, SO5, SO6, SO7, SO8, PX]

where

(* ------------------------------------------------------------------------------ *)
(* E expands a 32-bit word to 48-bits using function E *)

   process E [INPUT, OUTPUT] : noexit :=
      INPUT ?I32:BIT32;
```

```
        OUTPUT !E(I32);
           E [INPUT, OUTPUT]
   endproc

(* ------------------------------------------------------------------------ *)
(* XOR_48 asynchronously reads two 48-bit vectors and output the bitwise
 * sum, splitted into eight 6-bit vectors *)

   process XOR_48 [A, B, R1, R2, R3, R4, R5, R6, R7, R8] : noexit :=
      (
         A ? A48 : BIT48;
            exit (A48, any BIT48)
         |||
         B ? B48 : BIT48;
            exit (any BIT48, B48)
      )
      >> accept A48, B48 : BIT48 in
      SPLIT [A, B, R1, R2, R3, R4, R5, R6, R7, R8] (XOR (A48, B48))
   where
      (* the auxiliary process factors the computation of XOR (A48, B48) *)
      process SPLIT [A, B, R1, R2, R3, R4, R5, R6, R7, R8]
                    (I48 : BIT48) : noexit :=
         (
            R1 ! (1TO6   (I48)); exit
            |||
            R2 ! (7TO12  (I48)); exit
            |||
            R3 ! (13TO18 (I48)); exit
            |||
            R4 ! (19TO24 (I48)); exit
            |||
            R5 ! (25TO30 (I48)); exit
            |||
            R6 ! (31TO36 (I48)); exit
            |||
            R7 ! (37TO42 (I48)); exit
            |||
            R8 ! (43TO48 (I48)); exit
         )
         >>
         XOR_48 [A, B, R1, R2, R3, R4, R5, R6, R7, R8]
      endproc
   endproc

(* ------------------------------------------------------------------------ *)

   process S1 [INPUT, OUTPUT] : noexit :=
      INPUT ?I6:BIT6;
         OUTPUT !S1(I6);
            S1 [INPUT, OUTPUT]
   endproc
```

```
(* ------------------------------------------------------------------------ *)

   process S2 [INPUT, OUTPUT] : noexit :=
      INPUT ?I6:BIT6;
         OUTPUT !S2(I6);
            S2 [INPUT, OUTPUT]
   endproc

(* ------------------------------------------------------------------------ *)

   process S3 [INPUT, OUTPUT] : noexit :=
      INPUT ?I6:BIT6;
         OUTPUT !S3(I6);
            S3 [INPUT, OUTPUT]
   endproc

(* ------------------------------------------------------------------------ *)

   process S4 [INPUT, OUTPUT] : noexit :=
      INPUT ?I6:BIT6;
         OUTPUT !S4(I6);
            S4 [INPUT, OUTPUT]
   endproc

(* ------------------------------------------------------------------------ *)

   process S5 [INPUT, OUTPUT] : noexit :=
      INPUT ?I6:BIT6;
         OUTPUT !S5(I6);
            S5 [INPUT, OUTPUT]
   endproc

(* ------------------------------------------------------------------------ *)

   process S6 [INPUT, OUTPUT] : noexit :=
      INPUT ?I6:BIT6;
         OUTPUT !S6(I6);
            S6 [INPUT, OUTPUT]
   endproc

(* ------------------------------------------------------------------------ *)

   process S7 [INPUT, OUTPUT] : noexit :=
      INPUT ?I6:BIT6;
         OUTPUT !S7(I6);
            S7 [INPUT, OUTPUT]
   endproc

(* ------------------------------------------------------------------------ *)

   process S8 [INPUT, OUTPUT] : noexit :=
      INPUT ?I6:BIT6;
```

```
      OUTPUT !S8(I6);
         S8 [INPUT, OUTPUT]
   endproc

(* ------------------------------------------------------------------------ *)
(* P collects the results of the eight processes S_BOX_i (on INi) and
 * outputs them in a single transition exit; the permutation P is applied
 * in a second step when outputting the result on OUTPUT.
 *
 * the additional transition with gate exit could be removed by applying
 * the permutation P in a subsequent process, namely XOR_32 *)

   process P [IN1, IN2, IN3, IN4, IN5, IN6, IN7, IN8, OUTPUT] : noexit :=
      (
         IN1 ?I1:BIT4;
            exit (I1,       any BIT4, any BIT4, any BIT4,
                  any BIT4, any BIT4, any BIT4, any BIT4)
         |||
         IN2 ?I2:BIT4;
            exit (any BIT4, I2,       any BIT4, any BIT4,
                  any BIT4, any BIT4, any BIT4, any BIT4)
         |||
         IN3 ?I3:BIT4;
            exit (any BIT4, any BIT4, I3,       any BIT4,
                  any BIT4, any BIT4, any BIT4, any BIT4)
         |||
         IN4 ?I4:BIT4;
            exit (any BIT4, any BIT4, any BIT4, I4,
                  any BIT4, any BIT4, any BIT4, any BIT4)
         |||
         IN5 ?I5:BIT4;
            exit (any BIT4, any BIT4, any BIT4, any BIT4,
                  I5,       any BIT4, any BIT4, any BIT4)
         |||
         IN6 ?I6:BIT4;
            exit (any BIT4, any BIT4, any BIT4, any BIT4,
                  any BIT4, I6,       any BIT4, any BIT4)
         |||
         IN7 ?I7:BIT4;
            exit (any BIT4, any BIT4, any BIT4, any BIT4,
                  any BIT4, any BIT4, I7,       any BIT4)
         |||
         IN8 ?I8:BIT4;
            exit (any BIT4, any BIT4, any BIT4, any BIT4,
                  any BIT4, any BIT4, any BIT4, I8)
      )
      >> accept I1 : BIT4, I2 : BIT4, I3 : BIT4, I4 : BIT4,
                I5 : BIT4, I6 : BIT4, I7 : BIT4, I8 : BIT4 in
      OUTPUT !P(MK_32(I1,I2,I3,I4,I5,I6,I7,I8));
         P [IN1, IN2, IN3, IN4, IN5, IN6, IN7, IN8, OUTPUT]
   endproc
```

```
endproc
```

B.9 Library DATA_PATH

This library defines the process DATA_PATH, performing the 16 iterations of the DES, outputing on gate OUTPUT the result of (de)ciphering the data read on gate DATA using the sequence of 16 subkeys received on gate SUBKEY.

```
process DATA_PATH [DATA, OUTPUT, SUBKEY, CTRL_CL, CTRL_CR] : noexit :=
   hide FIRST_L, FIRST_R, OUTPUT_L, OUTPUT_R in
      (
         IP [DATA, FIRST_L, FIRST_R]
         |[FIRST_L, FIRST_R]|
         (
            hide CL_XR, CR_FX, FX_XR, XR_CR, CR_CL in
               (
                  CHOOSE_L [CTRL_CL, FIRST_L, CR_CL, CL_XR, OUTPUT_L]
                  |[CR_CL]|
                  CHOOSE_R [CTRL_CR, FIRST_R, XR_CR, CR_CL, CR_FX,
                            OUTPUT_R]
               )
               |[CL_XR, CR_FX, XR_CR]|
               CIPHER [SUBKEY, CR_FX, FX_XR]
               |[FX_XR]|
               XOR_32 [CL_XR, FX_XR, XR_CR]
         )
      )
      |[OUTPUT_L, OUTPUT_R]|
      IIP [OUTPUT_L, OUTPUT_R, OUTPUT]
where

(* ------------------------------------------------------------------------ *)
(* IP applies the initial permutation IP to the initial 64-bit vector
 * received on gate DATA and breaks the resulting 64-bit vector into two
 * 32-bit vectors L and R *)

   process IP [DATA, FIRST_L, FIRST_R] : noexit :=
      DATA ?I64:BIT64;
         SPLIT_LR [DATA, FIRST_L, FIRST_R] (IP (I64))
   where
      (* the auxiliary process avoids to compute IP (I64) twice *)
      process SPLIT_LR [DATA, FIRST_L, FIRST_R] (B64 : BIT64) : noexit :=
         (
            FIRST_L !1TO32(B64);
               exit
            |||
            FIRST_R !33TO64(B64);
               exit
         )
         >> IP [DATA, FIRST_L, FIRST_R]
```

```
      endproc
   endproc

(* ------------------------------------------------------------------------ *)
(* CHOOSE_L reads a 32-bit vector from INPUT and outputs to OUTPUT, but for
 * the first iteration, where it reads from FIRST_IN, and the last
 * iteration, where it outputs to LAST_OUT *)

   process CHOOSE_L [CTRL, FIRST_IN, INPUT, OUTPUT, LAST_OUT] : noexit :=
      CTRL ?CTRL:PHASE;
         (
            [CTRL == F] ->
               FIRST_IN ?L32:BIT32;
                  OUTPUT !L32;
                     CHOOSE_L [CTRL, FIRST_IN, INPUT, OUTPUT, LAST_OUT]
            []
         [CTRL == N] ->
            INPUT ?L32:BIT32;
                  OUTPUT !L32;
                     CHOOSE_L [CTRL, FIRST_IN, INPUT, OUTPUT, LAST_OUT]
         []
         [CTRL == L] ->
               INPUT ?L32:BIT32;
                  LAST_OUT !L32;
                     CHOOSE_L [CTRL, FIRST_IN, INPUT, OUTPUT, LAST_OUT]
         )
   endproc

(* ------------------------------------------------------------------------ *)
(* CHOOSE_R reads a 32-bit vector from INPUT and outputs to OUT1 and OUT2,
 * but for the first iteration, where it reads from FIRST_IN, and the last
 * one, where it outputs to LAST_OUT *)

   process CHOOSE_R [CTRL, FIRST_IN, INPUT, OUT1, OUT2, LAST_OUT]
                    : noexit :=
      CTRL ?CTRL:PHASE;
         (
            [CTRL == F] ->
               FIRST_IN ?R32:BIT32;
                  OUTPUT_R [CTRL, FIRST_IN, INPUT, OUT1, OUT2, LAST_OUT]
                           (R32)
            []
            [CTRL == N] ->
               INPUT ?R32:BIT32;
                  OUTPUT_R [CTRL, FIRST_IN, INPUT, OUT1, OUT2, LAST_OUT]
                           (R32)
            []
            [CTRL == L] ->
               INPUT ?R32:BIT32;
                  LAST_OUT !R32;
                     CHOOSE_R [CTRL, FIRST_IN, INPUT, OUT1, OUT2,
                               LAST_OUT]
```

```
        )
   where
      process OUTPUT_R [CTRL, FIRST_IN, INPUT, OUT1, OUT2, LAST_OUT]
                        (R32 : BIT32) : noexit :=
         OUT1 !R32;
            OUT2 !R32;
               CHOOSE_R [CTRL, FIRST_IN, INPUT, OUT1, OUT2, LAST_OUT]
         []
         OUT2 !R32;
            OUT1 !R32;
               CHOOSE_R [CTRL, FIRST_IN, INPUT, OUT1, OUT2, LAST_OUT]
      endproc
   endproc

(* ------------------------------------------------------------------------ *)
(* XOR_32 reads two 32-bit vectors and outputs their bitwise sum *)

   process XOR_32 [A, B, R] : noexit :=
      (
         A ? A32 : BIT32;
            exit (A32, any BIT32)
         |||
         B ? B32 : BIT32;
            exit (any BIT32, B32)
      )
      >> accept A32, B32 : BIT32 in
      R ! XOR (A32, B32);
         XOR_32 [A, B, R]
   endproc

(* ------------------------------------------------------------------------ *)
(* IIP assembles the two 32-bit vectors computed by the algorithm to the 64
 * bit vector and applies the inverse initial permutation IIP to compute
 * the final result *)

   process IIP [OUTPUT_L, OUTPUT_R, OUTPUT] : noexit :=
      (
         OUTPUT_L ?OL:BIT32;
            exit (OL, any BIT32)
         |||
         OUTPUT_R ?OH:BIT32;
            exit (any BIT32, OH)
      )
      >> accept OL, OH : BIT32 in
      OUTPUT !IIP(MK_64(OH,OL));
         IIP [OUTPUT_L, OUTPUT_R, OUTPUT]
   endproc

endproc
```

B.10 Library DES

The library DES.lib factorizes the definition of the architecture of the asynchronous DES, and is shared by all three LOTOS specifications of the DES, namely DES_ABSTRACT.lotos, DES_CONCRETE.lotos, and DES_SAMPLE.lotos.

```
process DES [CRYPT, KEY, DATA, OUTPUT] : noexit :=
   hide SUBKEY, CTRL_CL, CTRL_CR, CTRL_CK, CTRL_SHIFT, CTRL_DK in
      (
         DATA_PATH [DATA, OUTPUT, SUBKEY, CTRL_CL, CTRL_CR]
         |[SUBKEY]|
         KEY_PATH [KEY, SUBKEY, CTRL_CK, CTRL_SHIFT, CTRL_DK]
      )
      |[CTRL_CL, CTRL_CR, CTRL_CK, CTRL_SHIFT, CTRL_DK]|
      CONTROLLER [CRYPT, CTRL_CL, CTRL_CR, CTRL_CK, CTRL_SHIFT, CTRL_DK]
endproc
```

B.11 Specification with Abstract Bits: DES_ABSTRACT

This LOTOS specification can be used for compositional state space generation and verification. Due to the abstraction, there is no need to close the system with an environment.

```
specification DES_ABSTRACT [CRYPT, KEY, DATA, OUTPUT] : noexit

   library
      BOOLEAN, NATURAL, BIT_ABSTRACT, TYPES,
      PERMUTATION_FUNCTIONS, S_BOX_FUNCTIONS
   endlib

behaviour

   DES [CRYPT, KEY, DATA, OUTPUT]

where

   library
      DES, CONTROLLER, KEY_PATH, DATA_PATH, CIPHER
   endlib

endspec
```

B.12 Specification with Concrete Bits: DES_CONCRETE

This LOTOS specification can be used to generate a prototype implementation. It is not suitable for state space generation, because it would have to enumerate over all possible input values, i.e., 64-bit vectors.

```
specification DES_CONCRETE [CRYPT, KEY, DATA, OUTPUT] : noexit

   library
      BOOLEAN, NATURAL, BIT_CONCRETE, TYPES,
      PERMUTATION_FUNCTIONS, S_BOX_FUNCTIONS
```

```
    endlib

behaviour

    DES [CRYPT, KEY, DATA, OUTPUT]

where

    library
        DES, CONTROLLER, KEY_PATH, DATA_PATH, CIPHER
    endlib

endspec
```

B.13 Specification with Concrete Bits and Environment: DES_SAMPLE

This LOTOS specification can be used to directly (i.e., non compositionally) generate an LTS. After hiding all offers and minimization for branching bisimulation, the generated LTS is the one shown in Figure 2.

```
specification DES_SAMPLE [CRYPT, KEY, DATA, OUTPUT] : noexit

    library
        BOOLEAN, NATURAL, BIT_CONCRETE, TYPES,
        PERMUTATION_FUNCTIONS, S_BOX_FUNCTIONS
    endlib

behaviour

    DES [CRYPT, KEY, DATA, OUTPUT]
    |[CRYPT, KEY, DATA, OUTPUT]|
    ENVIRONMENT [CRYPT, KEY, DATA, OUTPUT]

where

    library
        DES, CONTROLLER, KEY_PATH, DATA_PATH, CIPHER
    endlib

(* ------------------------------------------------------------------------------ *)

type CONSTANTS is BIT64
    opns
        (* frequently used sample data *)
        C_01234567_89ABCDEF : -> BIT64
        (* frequently used sample key *)
        C_13345779_9BBCDFF1 : -> BIT64
        (* result of ciphering C_01234567_89ABCDEF by C_13345779_9BBCDFF1 *)
        C_85E81354_0F0AB405 : -> BIT64
    eqns
        ofsort BIT64
```

```
         C_01234567_89ABCDEF =
            MK_64 (0, 0, 0, 0,  0, 0, 0, 1,  0, 0, 1, 0,  0, 0, 1, 1,
                   0, 1, 0, 0,  0, 1, 0, 1,  0, 1, 1, 0,  0, 1, 1, 1,
                   1, 0, 0, 0,  1, 0, 0, 1,  1, 0, 1, 0,  1, 0, 1, 1,
                   1, 1, 0, 0,  1, 1, 0, 1,  1, 1, 1, 0,  1, 1, 1, 1);
      ofsort BIT64
         C_13345779_9BBCDFF1 =
            MK_64 (0, 0, 0, 1,  0, 0, 1, 1,  0, 0, 1, 1,  0, 1, 0, 0,
                   0, 1, 0, 1,  0, 1, 1, 1,  0, 1, 1, 1,  1, 0, 0, 1,
                   1, 0, 0, 1,  1, 0, 1, 1,  1, 0, 1, 1,  1, 1, 0, 0,
                   1, 1, 0, 1,  1, 1, 1, 1,  1, 1, 1, 1,  0, 0, 0, 1);
      ofsort BIT64
         C_85E81354_0F0AB405 =
            MK_64 (1, 0, 0, 0,  0, 1, 0, 1,  1, 1, 1, 0,  1, 0, 0, 0,
                   0, 0, 0, 1,  0, 0, 1, 1,  0, 1, 0, 1,  0, 1, 0, 0,
                   0, 0, 0, 0,  1, 1, 1, 1,  0, 0, 0, 0,  1, 0, 1, 0,
                   1, 0, 1, 1,  0, 1, 0, 0,  0, 0, 0, 0,  0, 1, 0, 1);
endtype

(* ------------------------------------------------------------------------ *)
(* process simulating the environment in order to close the system,
 * executing a single encryption of c_01234567_89abcdef with
 * c_13345779_9BBCDFF1, and checking the output of the expected result *)

   process ENVIRONMENT [CRYPT, KEY, DATA, OUTPUT] : noexit :=
      CRYPT !true;
      KEY !C_13345779_9BBCDFF1;
      DATA !C_01234567_89ABCDEF;
      (* cipher of C_01234567_89ABCDEF with C_13345779_9BBCDFF1 *)
      OUTPUT !C_85E81354_0F0AB405;
      stop
   endproc

endspec
```

B.14 Specification of Property 4

This LOTOS specification describes an automaton, which is used to verify the correct synchronisation of the data and key paths by equivalence checking.

```
specification PROPERTY_4 [CRYPT, SUBKEY] : noexit

   library
      BOOLEAN, NATURAL
   endlib

   type T is NATURAL
      opns
         14 : -> NAT
      eqns
```

```
        ofsort NAT
           14 = SUCC (SUCC (SUCC (SUCC (SUCC (9)))))
   endtype

behaviour

(**
 * process describing a loop starting with a synchronization on gate CRYPT,
 * followed by 16 synchronization on gate SUBKEY, where the synchronization
 * on CRYPT corresponding to the next iteration can already appear after
 * 14 synchronizations on SUBKEY.
 * this process is used to verify the presence of 16 iterations in the DES.
 *)
   CRYPT;
      SIXTEEN_ITERATIONS [CRYPT, SUBKEY]

where

   process SIXTEEN_ITERATIONS [CRYPT, SUBKEY] : noexit :=
      FOURTEEN_ITERATIONS [SUBKEY] (0)
      >>
      (
         SUBKEY;
            SUBKEY;
               exit
         |||
         CRYPT;
            exit
      )
      >>
      SIXTEEN_ITERATIONS [CRYPT, SUBKEY]
   endproc

   process FOURTEEN_ITERATIONS [SUBKEY] (N:NAT) : exit :=
      [N = 14] ->
         exit
      []
      [N < 14] ->
         SUBKEY;
            FOURTEEN_ITERATIONS [SUBKEY] (N + 1)
   endproc

endspec
```

C C Code for the EXEC/CÆSAR Framework

To generate a protoype from the LNT or LOTOS model using the EXEC/CÆSAR framework, additional C code is necessary, namely the main program (for which the example provided with CADP[13] can

[13] Precisely, the file `$CADP/src/exec_caesar/main.c` included in the CADP toolbox.

be used) and so-called *gate functions* implementing the interaction with the environment. The DES prototype reads its inputs from the standard input and prints its results to the standard output. Each rendezvous corresponds to one line of input (respectively, output), following the syntax of LOTOS, i.e., "G !O", where G is a gate name and O is a sequence of characters corresponding to the offer. For convenience, 64-bit vectors (for gates CRYPT, DATA, KEY, and OUTPUT) are represented by a sequence of sixteen hexadecimal digits, and Booleans (for gate CRYPT) by 0 (false) and 1 (true). The prototype can also write its execution trace in the SEQ format[14] to a log file.

C.1 Auxiliary Functions for Reading and Writing

The following auxiliary functions are required to parse and print 64-bit vectors. Each line of input parsed is stored in a variable (local to the module defining the gate functions), because the first gate function called by the prototype might not correspond to the input line, enabling its reuse by another gate function.

```
/* ------------------------------------------------------------------------ */

#include "caesar_kernel.h"

extern void CAESAR_KERNEL_EXIT();

#define streq(S1,S2) (strcmp ((S1), (S2)) == 0)

/* ------------------------------------------------------------------------ */

/* auxiliary function to convert a hexadecimal digit into a 4-bit vector */

static ADT_BIT4 CHAR_TO_BIT4 (C)
char C;
{
     switch (C) {
     case '0':
          return MK_4 (BIT_ZERO (), BIT_ZERO (), BIT_ZERO (), BIT_ZERO ());
     case '1':
          return MK_4 (BIT_ZERO (), BIT_ZERO (), BIT_ZERO (), BIT_ONE ());
     case '2':
          return MK_4 (BIT_ZERO (), BIT_ZERO (), BIT_ONE (),  BIT_ZERO ());
     case '3':
          return MK_4 (BIT_ZERO (), BIT_ZERO (), BIT_ONE (),  BIT_ONE ());
     case '4':
          return MK_4 (BIT_ZERO (), BIT_ONE (),  BIT_ZERO (), BIT_ZERO ());
     case '5':
          return MK_4 (BIT_ZERO (), BIT_ONE (),  BIT_ZERO (), BIT_ONE ());
     case '6':
          return MK_4 (BIT_ZERO (), BIT_ONE (),  BIT_ONE (),  BIT_ZERO ());
     case '7':
          return MK_4 (BIT_ZERO (), BIT_ONE (),  BIT_ONE (),  BIT_ONE ());
     case '8':
          return MK_4 (BIT_ONE (),  BIT_ZERO (), BIT_ZERO (), BIT_ZERO ());
     case '9':
```

[14] http://cadp.inria.fr/man/exhibitor.html#sect3

```
            return MK_4 (BIT_ONE (),  BIT_ZERO (), BIT_ZERO (), BIT_ONE ());
        case 'a': case 'A':
            return MK_4 (BIT_ONE (),  BIT_ZERO (), BIT_ONE (),  BIT_ZERO ());
        case 'b': case 'B':
            return MK_4 (BIT_ONE (),  BIT_ZERO (), BIT_ONE (),  BIT_ONE ());
        case 'c': case 'C':
            return MK_4 (BIT_ONE (),  BIT_ONE (),  BIT_ZERO (), BIT_ZERO ());
        case 'd': case 'D':
            return MK_4 (BIT_ONE (),  BIT_ONE (),  BIT_ZERO (), BIT_ONE ());
        case 'e': case 'E':
            return MK_4 (BIT_ONE (),  BIT_ONE (),  BIT_ONE (),  BIT_ZERO ());
        case 'f': case 'F':
            return MK_4 (BIT_ONE (),  BIT_ONE (),  BIT_ONE (),  BIT_ONE ());
        default:
            CAESAR_KERNEL_EXIT ("cannot convert '%c' into a 4-bit vector\n",
                                C);
            /* NOTREACHED */
            return MK_4 (BIT_ZERO (), BIT_ZERO (), BIT_ZERO (), BIT_ZERO ());
        }
}

/* ------------------------------------------------------------------------ */

/* auxiliary macro to print four bits as a hexadecimal digit */

#define PRINT_4_BITS(F,B1,B2,B3,B4) \
        { \
        char N; \
        N = 0; \
        if ((B1) == BIT_ONE ()) N += 8; \
        if ((B2) == BIT_ONE ()) N += 4; \
        if ((B3) == BIT_ONE ()) N += 2; \
        if ((B4) == BIT_ONE ()) N += 1; \
        fprintf ((F), "%x", N); \
        }

/* ------------------------------------------------------------------------ */

/* auxiliary macro to access bit number N of the 64-bit vector V */

#define BIT(V,N) (CAESAR_ADT_STAR_ADT_BIT64 (V).CAESAR_ADT_ ## N ## _MK_64)

/* ------------------------------------------------------------------------ */

/* auxiliary function to output a 64-bit vector as 16 hexadecimal digits */

static void PRINT_64_BIT_VECTOR (F, V)
FILE *F;
ADT_BIT64 V;
{
    PRINT_4_BITS (F, BIT (V,  1), BIT (V,  2), BIT (V,  3), BIT (V,  4));
    PRINT_4_BITS (F, BIT (V,  5), BIT (V,  6), BIT (V,  7), BIT (V,  8));
```

```
    PRINT_4_BITS (F, BIT (V,  9), BIT (V, 10), BIT (V, 11), BIT (V, 12));
    PRINT_4_BITS (F, BIT (V, 13), BIT (V, 14), BIT (V, 15), BIT (V, 16));
    PRINT_4_BITS (F, BIT (V, 17), BIT (V, 18), BIT (V, 19), BIT (V, 20));
    PRINT_4_BITS (F, BIT (V, 21), BIT (V, 22), BIT (V, 23), BIT (V, 24));
    PRINT_4_BITS (F, BIT (V, 25), BIT (V, 26), BIT (V, 27), BIT (V, 28));
    PRINT_4_BITS (F, BIT (V, 29), BIT (V, 30), BIT (V, 31), BIT (V, 32));
    PRINT_4_BITS (F, BIT (V, 33), BIT (V, 34), BIT (V, 35), BIT (V, 36));
    PRINT_4_BITS (F, BIT (V, 37), BIT (V, 38), BIT (V, 39), BIT (V, 40));
    PRINT_4_BITS (F, BIT (V, 41), BIT (V, 42), BIT (V, 43), BIT (V, 44));
    PRINT_4_BITS (F, BIT (V, 45), BIT (V, 46), BIT (V, 47), BIT (V, 48));
    PRINT_4_BITS (F, BIT (V, 49), BIT (V, 50), BIT (V, 51), BIT (V, 52));
    PRINT_4_BITS (F, BIT (V, 53), BIT (V, 54), BIT (V, 55), BIT (V, 56));
    PRINT_4_BITS (F, BIT (V, 57), BIT (V, 58), BIT (V, 59), BIT (V, 60));
    PRINT_4_BITS (F, BIT (V, 61), BIT (V, 62), BIT (V, 63), BIT (V, 64));
}

/* ------------------------------------------------------------------------ */

/* buffer for the gate of the rendezvous in the current line of stdin */

static char CURRENT_GATE[6];

/* buffer for the offer of the rendezvous in the current line of stdin */

static char CURRENT_OFFER[17];

/*
 * if equal to zero, CURRENT_GATE and CURRENT_OFFER contain the gate (resp.
 * OFFER) of the rendezvous in the current line of stdin
 */

static char CURRENT_LINE_NOT_READ = 1;

/* ------------------------------------------------------------------------ */

/*
 * auxiliary function to check whether the current line of the standard
 * input corresponds to a rendezvous on gate GATE
 */

int PARSE_INPUT (GATE, OFFER)
char *GATE;
void *OFFER; /* a caster */
{
    int N;

    if (feof (stdin))
        return (0);

    if (CURRENT_LINE_NOT_READ) {
        /* read a line from stdin */
        N = scanf ("%5s !%16[0123456789aAbBcCdDeEfF]\n",
```

```
                    CURRENT_GATE, CURRENT_OFFER);
        if (N == EOF)
            return (0);
        if (N != 2) {
            CAESAR_KERNEL_EXIT ("incorrect input syntax\n");
        }
        CURRENT_LINE_NOT_READ = 0;
    }
    if (!streq (CURRENT_GATE, GATE))
        return (0);
    CURRENT_LINE_NOT_READ = 1;

    if (streq (GATE, "CRYPT")) {
        if (streq (CURRENT_OFFER, "0")) {
            *((ADT_BOOL *) OFFER) = ADT_FALSE ();
        } else if (streq (CURRENT_OFFER, "1")) {
            *((ADT_BOOL *) OFFER) = ADT_TRUE ();
        } else {
            CAESAR_KERNEL_EXIT ("incorrect offer \"%s\" for gate %s\n",
                                CURRENT_OFFER, GATE);
            /* NOTREACHED */
        }
    } else if (streq (GATE, "DATA") || streq (GATE, "KEY")) {
        /* set remaining digits to '0' */
        for (N = strlen (CURRENT_OFFER) ; N < 16 ; N++)
            CURRENT_OFFER[N] = '0';
        /* concatenation of the 16 characters to form a 64-bit vector */
        *((ADT_BIT64 *) OFFER) =
            CONCAT_BIT4 (CHAR_TO_BIT4 (CURRENT_OFFER[0]),
                         CHAR_TO_BIT4 (CURRENT_OFFER[1]),
                         CHAR_TO_BIT4 (CURRENT_OFFER[2]),
                         CHAR_TO_BIT4 (CURRENT_OFFER[3]),
                         CHAR_TO_BIT4 (CURRENT_OFFER[4]),
                         CHAR_TO_BIT4 (CURRENT_OFFER[5]),
                         CHAR_TO_BIT4 (CURRENT_OFFER[6]),
                         CHAR_TO_BIT4 (CURRENT_OFFER[7]),
                         CHAR_TO_BIT4 (CURRENT_OFFER[8]),
                         CHAR_TO_BIT4 (CURRENT_OFFER[9]),
                         CHAR_TO_BIT4 (CURRENT_OFFER[10]),
                         CHAR_TO_BIT4 (CURRENT_OFFER[11]),
                         CHAR_TO_BIT4 (CURRENT_OFFER[12]),
                         CHAR_TO_BIT4 (CURRENT_OFFER[13]),
                         CHAR_TO_BIT4 (CURRENT_OFFER[14]),
                         CHAR_TO_BIT4 (CURRENT_OFFER[15]));
    } else {
        CAESAR_KERNEL_EXIT ("unknown gate \"%s\"\n", CURRENT_GATE);
        /* NOTREACHED */
    }
    return (1);
}
```

C.2 Gate Functions

Lines typeset in small, light grey font correspond to automatically generated code to check assumptions about the parameters of gate functions and (possibly) log gate function calls to a file. These functions are documented in the header file caesar_kernel.h included in the CADP toolbox.

```
/* ------------------------------------------------------------------------ */

int  CRYPT (INPUT_MODE, BOOL, OFFER, EOL)
CAESAR_KERNEL_OFFER INPUT_MODE;
char *BOOL;
ADT_BOOL *OFFER;
CAESAR_KERNEL_OFFER EOL;
{
     int CAESAR_STATUS;

     CAESAR_KERNEL_ASSERT_INPUT (INPUT_MODE);
     CAESAR_KERNEL_ASSERT_TYPE (BOOL, "ADT_BOOL");
     CAESAR_KERNEL_ASSERT_EOL (EOL);

     CAESAR_STATUS = PARSE_INPUT ("CRYPT", OFFER);

     CAESAR_KERNEL_LOG_GATE (__func__);
     /* LINTED */
     CAESAR_KERNEL_LOG_OFFER (INPUT_MODE, BOOL, *OFFER, ADT_PRINT_BOOL,
                              CAESAR_STATUS);
     CAESAR_KERNEL_LOG_RESULT (CAESAR_STATUS);

     return (CAESAR_STATUS);
}

/* ------------------------------------------------------------------------ */

int  DATA (INPUT_MODE, BIT64, OFFER, EOL)
CAESAR_KERNEL_OFFER INPUT_MODE;
char *BIT64;
ADT_BIT64 *OFFER;
CAESAR_KERNEL_OFFER EOL;
{
     int CAESAR_STATUS;

     CAESAR_KERNEL_ASSERT_INPUT (INPUT_MODE);
     CAESAR_KERNEL_ASSERT_TYPE (BIT64, "ADT_BIT64");
     CAESAR_KERNEL_ASSERT_EOL (EOL);

     CAESAR_STATUS = PARSE_INPUT ("DATA", OFFER);

     CAESAR_KERNEL_LOG_GATE (__func__);
     /* LINTED */
     CAESAR_KERNEL_LOG_OFFER (INPUT_MODE, BIT64, *OFFER, ADT_PRINT_BIT64,
                              CAESAR_STATUS);
     CAESAR_KERNEL_LOG_RESULT (CAESAR_STATUS);
```

```
    return (CAESAR_STATUS);
}

/* ------------------------------------------------------------------------ */

int  KEY (INPUT_MODE, BIT64, OFFER, EOL)
CAESAR_KERNEL_OFFER INPUT_MODE;
char *BIT64;
ADT_BIT64 *OFFER;
CAESAR_KERNEL_OFFER EOL;
{
    int CAESAR_STATUS;

    CAESAR_KERNEL_ASSERT_INPUT (INPUT_MODE);
    CAESAR_KERNEL_ASSERT_TYPE (BIT64, "ADT_BIT64");
    CAESAR_KERNEL_ASSERT_EOL (EOL);

    CAESAR_STATUS = PARSE_INPUT ("KEY", OFFER);

    CAESAR_KERNEL_LOG_GATE (__func__);
    /* LINTED */
    CAESAR_KERNEL_LOG_OFFER (INPUT_MODE, BIT64, *OFFER, ADT_PRINT_BIT64,
                             CAESAR_STATUS);
    CAESAR_KERNEL_LOG_RESULT (CAESAR_STATUS);

    return (CAESAR_STATUS);
}

/* ------------------------------------------------------------------------ */

int  OUTPUT (OUTPUT_MODE, BIT64, OFFER, EOL)
CAESAR_KERNEL_OFFER OUTPUT_MODE;
char *BIT64;
ADT_BIT64 OFFER;
CAESAR_KERNEL_OFFER EOL;
{
    CAESAR_KERNEL_ASSERT_OUTPUT (OUTPUT_MODE);
    CAESAR_KERNEL_ASSERT_TYPE (BIT64, "ADT_BIT64");
    CAESAR_KERNEL_ASSERT_EOL (EOL);

    fprintf (stdout, "OUTPUT␣!");
    PRINT_64_BIT_VECTOR (stdout, OFFER);
    fprintf (stdout, "\n");

    CAESAR_KERNEL_LOG_GATE (__func__);
    /* LINTED */
    CAESAR_KERNEL_LOG_OFFER (OUTPUT_MODE, BIT64, OFFER, ADT_PRINT_BIT64,
                             1);
    CAESAR_KERNEL_LOG_RESULT (1);

    return (1);
```

```
}
/* ------------------------------------------------------------------------------------ */
```

D Complete Verification Scenarios for the Asynchronous DES

The complete verification scenario of the asynchronous DES is executed by the following SVL script, using only sequential tools of CADP (i.e., no distributed state space generation is required[15]). The script is also available in the demo example on the CADP website[4].

The SVL script first compositionally generates the LTS corresponding to the abstract LNT model DES_ABSTRACT.lnt. The script then verifies several properties of the LNT models, using different techniques, such as model checking (for the temporal logic properties of Sections 4 and 5) and equivalence checking, but also the generation of a prototype from the LNT model DES_CONCRETE.lnt and comparing its output for some example data and key with official results. These first steps can be easily adapted to use the LOTOS model instead of the LNT model. Finally, the LNT models are compared (using equivalence checking) with the corresponding LOTOS specifications, which are supposed to be located in a subdirectory called "LOTOS", together with an SVL script called "demo.svl" generating the LTSs for the LOTOS specifications DES_ABSTRACT.lotos and DES_SAMPLE.lotos.

For a description of the syntax of SVL, see the SVL manual page[16] — the most important points being that lines starting with "%" are Bourne shell commands, and that temporal logic formulas in MCL (Model Checking Language) [14] are directly inlined.

```
-------------------------------------------------------------------------------
-- Compositional state space generation
-------------------------------------------------------------------------------

-- In order to reduce the time and memory requirements for the generation
-- of the state space and the verification of properties of the model, the
-- domain of 64-bit vectors is reduced to a single value, by simply
-- redefining the data type for bits so as to use a singleton domain:
-- instead of the module "BIT_CONCRETE.lnt", the module "BIT_ABSTRACT.lnt"
-- is used.
--
-- Each of the three main components of the DES is generated and minimized
-- under the constraints of the already computed parts.

% DEFAULT_PROCESS_FILE="DES.lnt"

-- creation of BIT.lnt as a copy of BIT_ABSTRACT.lnt

% sed -e 's/BIT_ABSTRACT/BIT/' BIT_ABSTRACT.lnt > BIT.lnt
% SVL_RECORD_FOR_CLEAN "BIT.lnt"

-- generation and minimization of the controller
```

[15] The screenshots used in the manual page of the DISTRIBUTOR tool where obtained by the dsitributed generation of DES_SAMPLE.lotos

[16] http://cadp.inria.fr/man/svl.html

```
"controller.bcg" = branching reduction of
        CONTROLLER;

-- generation and minimization of the key_path, constrained by the
-- controller generated before

"keypath.bcg" = branching reduction of
        KEY_PATH
        -|[CTRL_CK, CTRL_SHIFT, CTRL_DK]|
        "controller.bcg";

-- generation and minimization of the parallel composition of the
-- minimized controller and the minimized key_path

"controller_keypath.bcg" = branching reduction of
        "keypath.bcg"
        |[CTRL_CK, CTRL_SHIFT, CTRL_DK]|
        "controller.bcg";

-- generation and minimization of the data_path, constrained by the
-- parallel composition of the controller and key_path

"data_path.bcg" = branching reduction of
        DATA_PATH
        -|[CTRL_CL, CTRL_CR, SUBKEY]|
        "controller_keypath.bcg";

-- generation and minimization of the complete DES with abstract bits;
-- gate SUBKEY is left visible for verification purposes

"des.bcg" = branching reduction of
        hide CTRL_CL, CTRL_CR, CTRL_CK, CTRL_SHIFT, CTRL_DK in
                "data_path.bcg"
                |[CTRL_CL, CTRL_CR, SUBKEY]|
                "controller_keypath.bcg";

-------------------------------------------------------------------------
-- Verification of properties
-------------------------------------------------------------------------

property PROPERTY_1
        "The DES executes indefinitely, i.e., has no deadlock"
is
        deadlock of "des.bcg";
        expected FALSE;
end property

-------------------------------------------------------------------------

property PROPERTY_2
        "The DES can always deliver outputs, and each triplet of inputs is"
```

```
        "eventually␣followed␣by␣an␣output"
is
        "des.bcg" |= with evaluator4
                library standard.mcl end_library
                [ true* ] INEVITABLE ( { OUTPUT ... } );
        expected TRUE;

        "des.bcg" |= with evaluator4
                library standard.mcl end_library
                macro SEQUENCE (A, B, C) is
                   (A) .
                   not ((A) or (B) or (C))* .
                   (B) .
                   not ((A) or (B) or (C))* .
                   (C)
                end_macro
                macro PARALLEL (A, B, C) is
                   SEQUENCE ((A), (B), (C)) |
                   SEQUENCE ((A), (C), (B)) |
                   SEQUENCE ((B), (A), (C)) |
                   SEQUENCE ((B), (C), (A)) |
                   SEQUENCE ((C), (A), (B)) |
                   SEQUENCE ((C), (B), (A))
                end_macro
                [ true* . PARALLEL ({CRYPT...}, {DATA...}, {KEY...}) ]
                INEVITABLE ({OUTPUT...});
        expected TRUE;
end property
```

```
property PROPERTY_3 (A, B, N)
        "The␣DES␣accepts␣up␣to␣$N,␣but␣not␣more,␣successive␣transitions"
        "\"$A\"␣before␣producing␣a␣transition␣\"$B\""
is
        "des.bcg"
        |= with evaluator4
                [ true* . ( ($A) . not ( ($A) or ($B) )* ){$N} . ($A) ]
                false;
        expected TRUE;

        "des.bcg"
        |= with evaluator4
                < true* . ( ($A) . not ( ($A) or ($B) )* ){$N-1} . ($A) >
                true;
        expected TRUE;
end property

check PROPERTY_3 ("{␣CRYPT␣...␣}", "{␣OUTPUT␣...␣}", 3);
check PROPERTY_3 ("{␣DATA␣...␣}", "{␣OUTPUT␣...␣}", 3);
check PROPERTY_3 ("{␣KEY␣...␣}", "{␣OUTPUT␣...␣}", 4);
```

```
property PROPERTY_4
        "The DES correctly synchronizes the data and key paths: there are"
        "16 iterations , each marked by a transition labeled with gate"
        "SUBKEY"
is
        -- The presence of the 16 iterations in "des.bcg" can be verified
        -- by comparison with an LTS describing the cyclic execution of a
        -- CRYPT transition followed by sixteen SUBKEY transitions. Because
        -- this LTS has only two actions ("CRYPT" and "SUBKEY", without
        -- offers), in "des.bcg , the labels for these two gates have to be
        -- renamed, all other labels have to be hidden, and the comparison
        -- has to use a weak equivalence (here, branching bisimulation).

        "des_crypt_subkey.bcg" =
                branching reduction of
                total rename "CRYPT.*" -> CRYPT, "SUBKEY.*" -> SUBKEY in
                hide DATA, OUTPUT, KEY in "des.bcg";

        -- verification by equivalence checking

        branching comparison "property_4.lnt" == "des_crypt_subkey.bcg";
        expected TRUE;

        -- verification by model checking

        "des_crypt_subkey.bcg" |= with evaluator4
                macro SIXTEEN_SUBKEYS_ONE_CRYPT () is
                   for I : Nat from 1 to 14 do "SUBKEY" end for .
                   (
                      ( "SUBKEY" . ( ( "SUBKEY" . "CRYPT" ) |
                                     ( "CRYPT" . "SUBKEY" ) ) ) |
                      ( "CRYPT" . "SUBKEY" . "SUBKEY" )
                   )
                end_macro
                ( [ true ]
                  nu X . ( ( < SIXTEEN_SUBKEYS_ONE_CRYPT () > true )
                           and
                           ( [ SIXTEEN_SUBKEYS_ONE_CRYPT () ] X ) ) )
                and
                ( < CRYPT> true )
                and
                ( [ not CRYPT ] false );
        expected TRUE;
end property
```

```
-- To verify the correct function, a prototype implementation is generated
-- from the LNT specification "DES.lnt" (with concrete bits) using the
-- EXEC/CAESAR framework. This prototype is then used to encipher and
```

```
-- decipher some sample blocks, and the results are compared to the
-- official results.

% SVL_PRINT_MESSAGE ""
% SVL_PRINT_MESSAGE "generating DES executable ..."

-- creation of BIT.lnt as a copy of BIT_CONCRETE.lnt

% sed -e 's/BIT_CONCRETE/BIT/' BIT_CONCRETE.lnt > BIT.lnt

-- translation from LNT to LOTOS

"DES.lotos" = "DES.lnt";

-- translation from LOTOS to C

% caesar.adt -silent DES.lotos 2>&1 | tee -a $SVL_LOG_FILE
% caesar -silent -exec -e7 DES.lotos 2>&1 | tee -a $SVL_LOG_FILE

-- compilation of the generated C code

% $CADP/src/com/cadp_cc -I$CADP/incl -DCAESAR_KERNEL_DELAY=0 -DLNT \
%    DES.c gate_functions.c $CADP/src/exec_caesar/main.c -lm \
%    -o des 2>&1 | tee -a $SVL_LOG_FILE

-- cleanup of generated files

% SVL_CLEAN_LNT_DEPEND "DES.lnt"
% SVL_REMOVE "DES.h"
% SVL_REMOVE "DES.c"
% SVL_REMOVE "DES.err"
% SVL_REMOVE "DES.o"
% SVL_REMOVE "gate_functions.o"
% SVL_REMOVE "main.o"
% SVL_RECORD_FOR_CLEAN "des"
% SVL_RECORD_FOR_CLEAN "input.log"

-------------------------------------------------------------------------------

property PROPERTY_5 (CRYPT, KEY, DATA, OUTPUT)
        "The DES prototype computes the expected result"
is
        % echo "CRYPT !$CRYPT" > input.log
        % echo "DATA !$DATA" >> input.log
        % echo "KEY !$KEY" >> input.log
        % ./des < input.log
        expected "OUTPUT !$OUTPUT";
end property

check PROPERTY_5 (1, "8000000000000000", "8000000000000000",
                  "6a7fc86c02379a5e");
check PROPERTY_5 (0, "8000000000000000", "6a7fc86c02379a5e",
```

```
                    "8000000000000000");
check PROPERTY_5 (1, "133457799bbcdff1", "0123456789abcdef",
                    "85e813540f0ab405");
check PROPERTY_5 (0, "133457799bbcdff1", "0123456789abcdef",
                    "ee0f7c12e0b09338");
check PROPERTY_5 (1, "133457799bbcdff1", "ee0f7c12e0b09338",
                    "0123456789abcdef");
check PROPERTY_5 (0, "133457799bbcdff1", "85e813540f0ab405",
                    "0123456789abcdef");
check PROPERTY_5 (1, "0e329232ea6d0d73", "8787878787878787",
                    "0000000000000000");
check PROPERTY_5 (0, "0e329232ea6d0d73", "0000000000000000",
                    "8787878787878787");
```

```
property PROPERTY_6
        "The DES (with concrete bits) correctly computes the encryption"
        "result of data 0123456789ABCDEF with key 133457799BBCDFF1;"
        "moreover, when value offers are removed from action labels, the"
        "LTS generated from the DES with concrete bits is included, modulo"
        "branching preorder, in the LTS generated from the DES with"
        "abstract bits"
is
        "des_sample.bcg" = branching reduction of
                "DES_SAMPLE.lnt":"MAIN_SAMPLE";

        "des_sample.bcg" |= with evaluator4
                library standard.mcl end_library
                [ not ( { OUTPUT ... } )* ] INEVITABLE ( { OUTPUT ... } );
        expected TRUE;

        branching comparison
                total rename
                        "CRYPT.*"   -> "CRYPT",
                        "DATA.*"    -> "DATA",
                        "KEY.*"     -> "KEY",
                        "OUTPUT.*"  -> "OUTPUT"
                in "des_sample.bcg"
        <=
                hide SUBKEY in
                total rename
                        "CRYPT.*"   -> "CRYPT",
                        "DATA.*"    -> "DATA",
                        "KEY.*"     -> "KEY",
                        "OUTPUT.*"  -> "OUTPUT"
                in "des.bcg";
        expected TRUE;
end property
```

```
property PROPERTY_7
        "equivalence between the LNT and LOTOS models"
is
        -- build the LTSs from the LOTOS specifications
        % ( cd LOTOS ; echo "" ; svl )

        -- comparison of the LTSs generated with abstract bits
        branching comparison
                "des.bcg"
                ==
                "LOTOS/des.bcg";
        expected TRUE;

        -- comparison of the LTSs generated with concrete bits
        % if [ -f LOTOS/des_sample.bcg ]
        % then
                branching comparison
                        "des_sample.bcg"
                        ==
                        "LOTOS/des_sample.bcg";
                expected TRUE;
        % fi
end property
```