HAL
open science

Hardware Accelerators for ECC and HECC

Arnaud Tisserand

To cite this version:

Arnaud Tisserand. Hardware Accelerators for ECC and HECC. ECC: 19th Workshop on Elliptic Curve Cryptography, Sep 2015, Bordeaux, France. hal-01207422

HAL Id: hal-01207422

https://inria.hal.science/hal-01207422

Submitted on 30 Sep 2015

HAL is a multi-disciplinary open access archive for the deposit and dissemination of scientific research documents, whether they are published or not. The documents may come from teaching and research institutions in France or abroad, or from public or private research centers.

L'archive ouverte pluridisciplinaire **HAL**, est destinée au dépôt et à la diffusion de documents scientifiques de niveau recherche, publiés ou non, émanant des établissements d'enseignement et de recherche français ou étrangers, des laboratoires publics ou privés.

Hardware Accelerators for ECC and HECC

Arnaud Tisserand

CNRS, IRISA laboratory, CAIRN research team

ECC
Bordeaux
Sep. 29–30, 2015

Summary

- Introduction
- Accelerator architecture and units
- Accelerator programming
- Implementation results: comparison ECC vs HECC on FPGA
- Conclusion & current/future works

Current Projects on (H)ECC Accelerators

PAVOIS project 2012–2016

Arithmetic Protections Against Physical Attacks for Elliptic Curve based Cryptography

- IRISA (Lannion)
- LIRMM (Perpignan, Montpellier & Toulon)

`http://pavois.irisa.fr/`

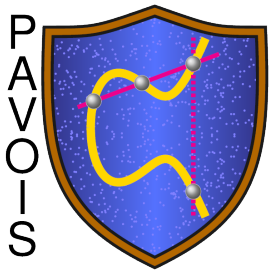

ANR 12 BS02 002

HAH project 2014–2017

Hardware and Arithmetic for Hyperelliptic Curves Cryptography

- IRISA (Lannion)
- IRMAR (Rennes)

`http://h-a-h.inria.fr/`

Labex

and

CENTRE
HENRI LEBESGUE
CENTRE DE MATHÉMATIQUES

Introduction

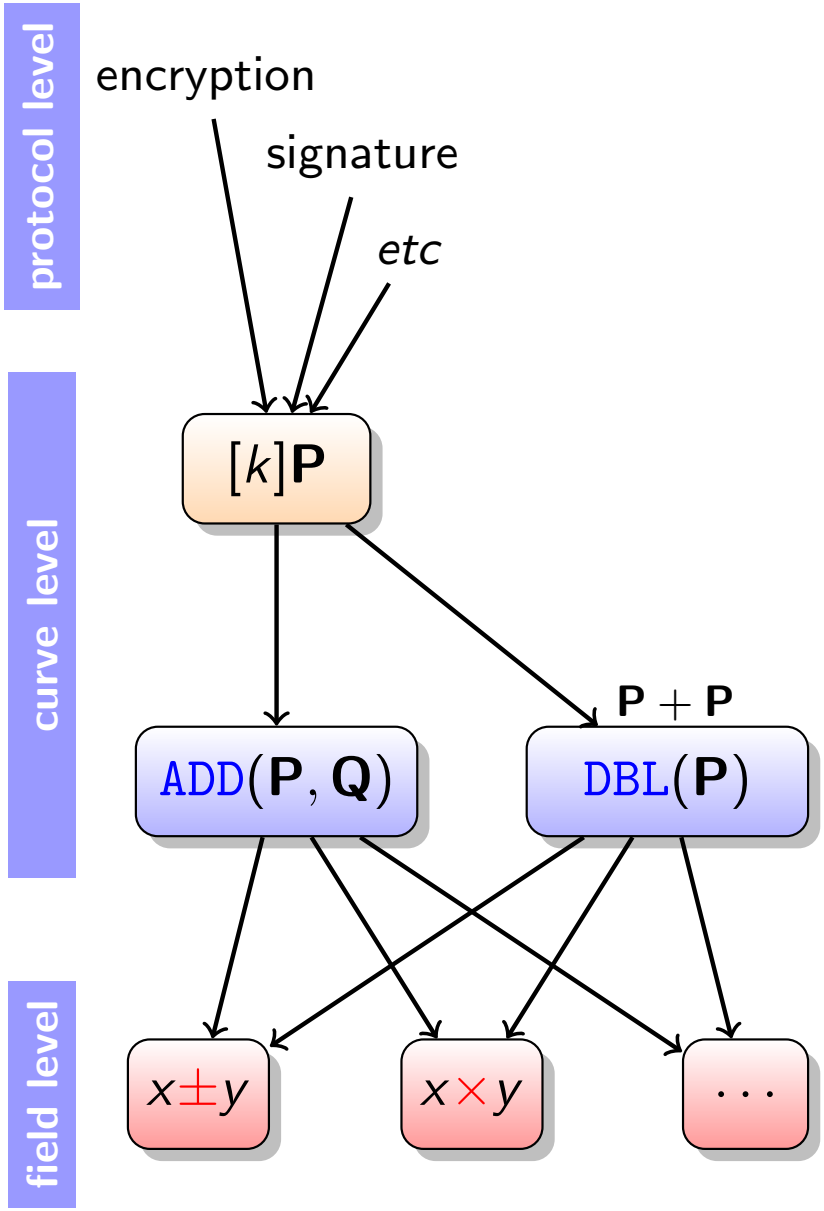

Introduction

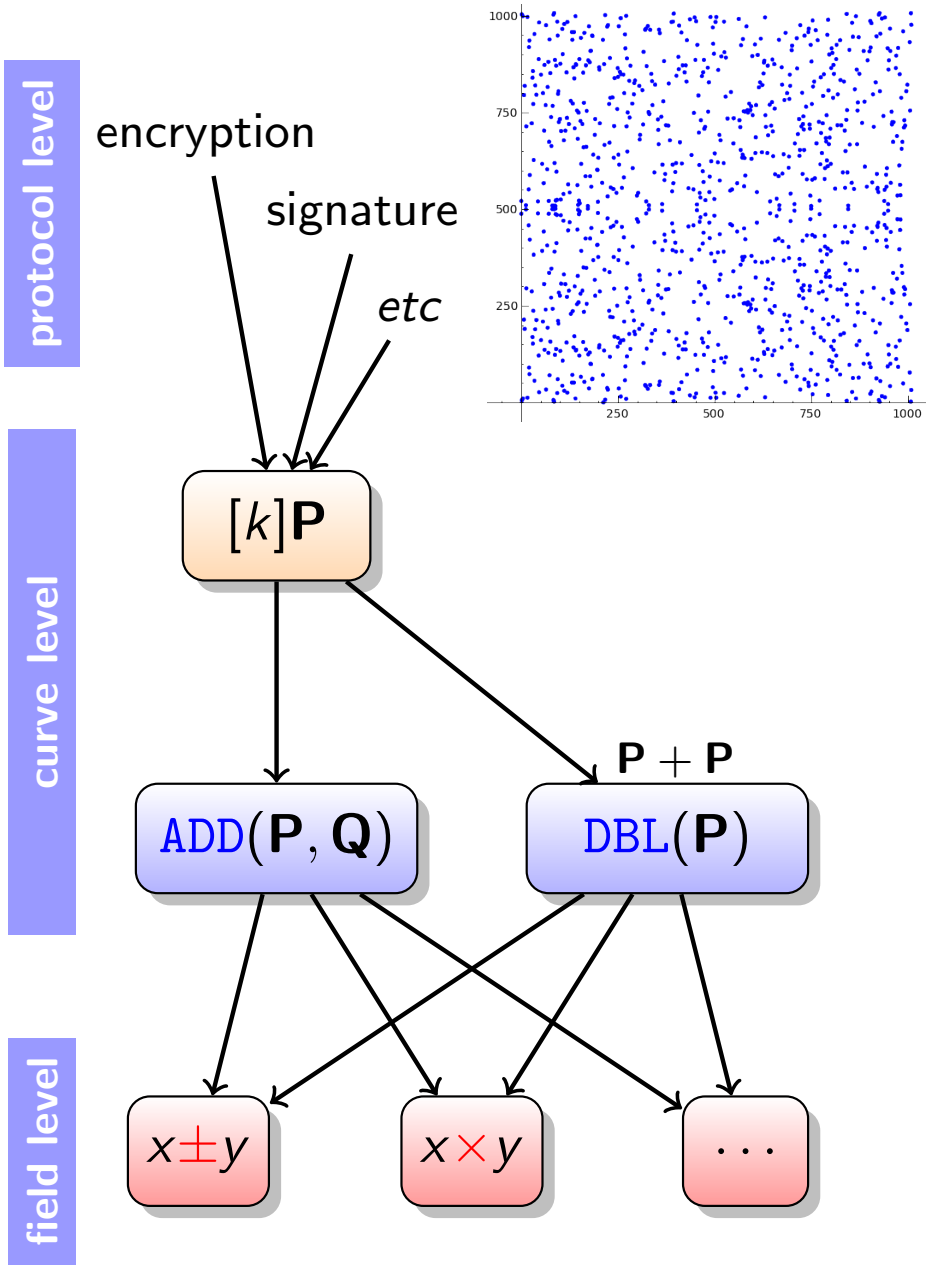

$E : y^2 = x^3 + 4x + 20$ over GF(1009)

points: $\mathbf{P}$, $\mathbf{Q} = (x, y)$ or (x, y, z) or ...

Introduction

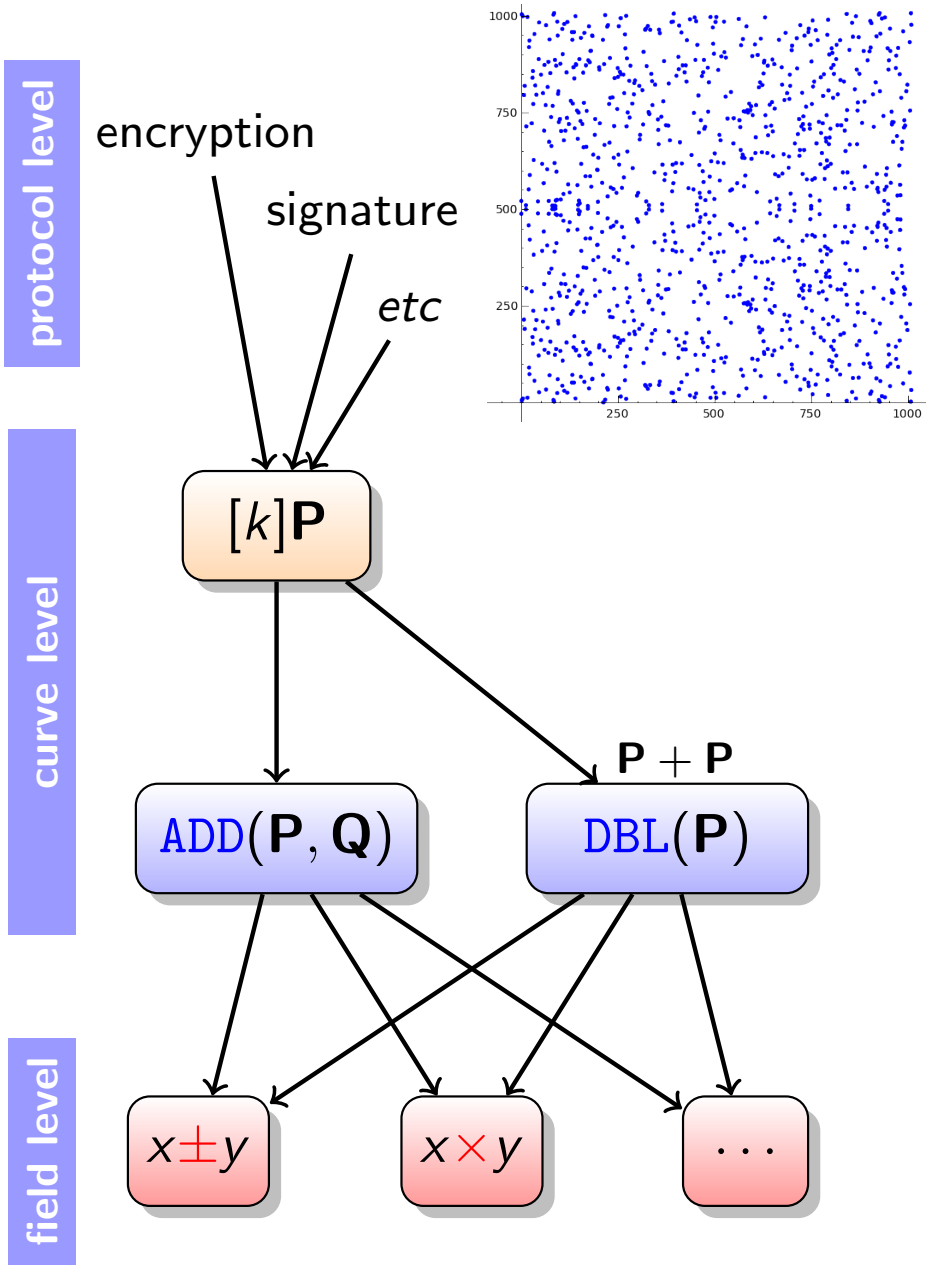

$E : y^2 = x^3 + 4x + 20$ over GF(1009)

points: $\mathbf{P}$, $\mathbf{Q} = (x, y)$ or (x, y, z) or ...

coordinates: $x, y, z \in \mathrm{GF}(\cdot)$

$\mathbb{F}_p$, $\mathbb{F}_{2^m}$, t : 80–600 bits

$k = (k_{t-1}k_{t-2}\ldots k_1k_0)_2 \in \mathbb{N}$

Introduction

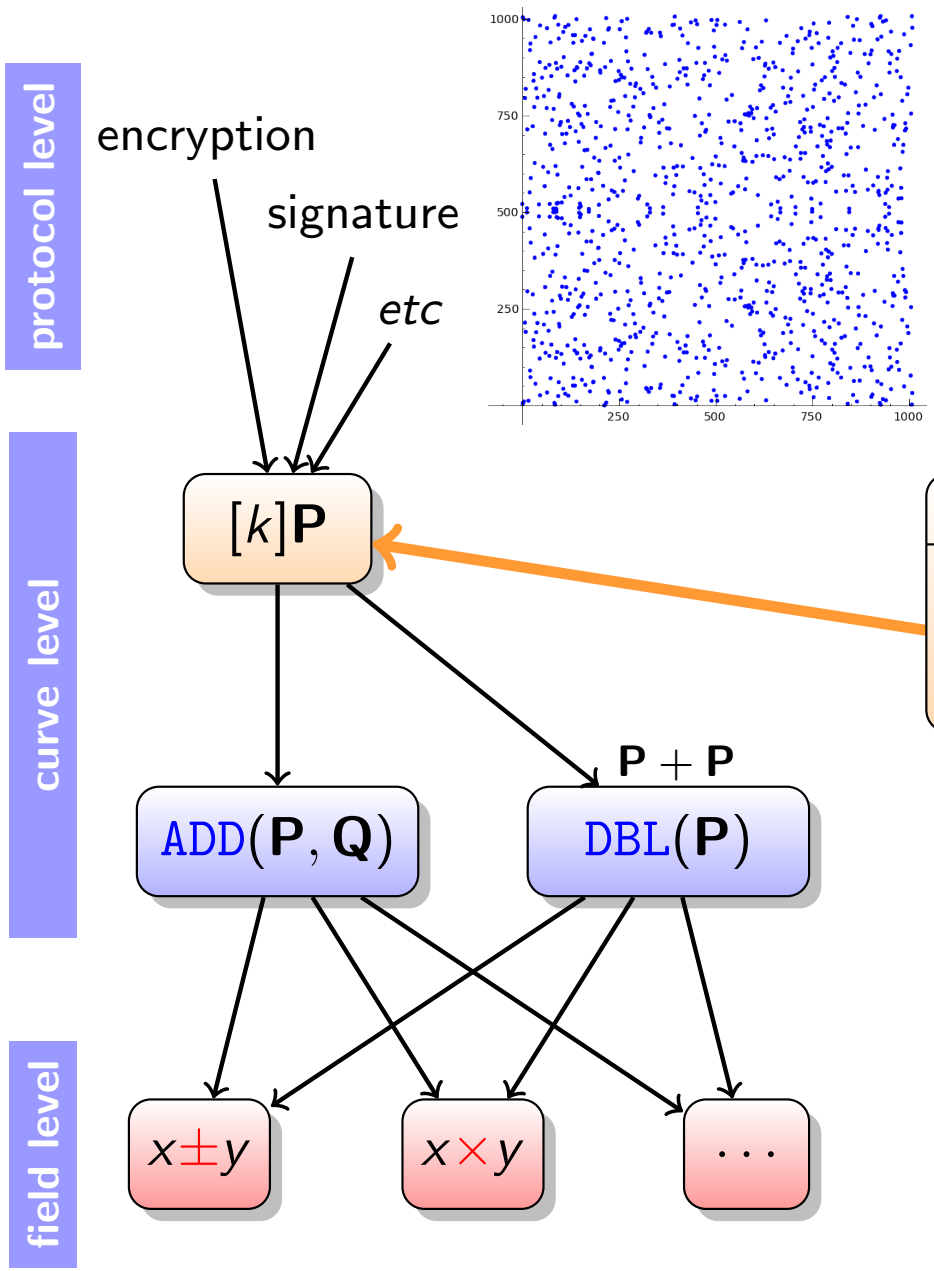

$E : y^2 = x^3 + 4x + 20$ over GF(1009)

points: $\mathbf{P}$, $\mathbf{Q} = (x, y)$ or (x, y, z) or ...

coordinates: $x, y, z \in \mathrm{GF}(\cdot)$

$\mathbb{F}_p$, $\mathbb{F}_{2^m}$, t : 80–600 bits

$k = (k_{t-1}k_{t-2}\ldots k_1k_0)_2 \in \mathbb{N}$

Scalar multiplication operation

```
for i from 0 to t − 1 do
    if k_i = 1 then Q = ADD(P, Q)
    P = DBL(P)
```

Introduction

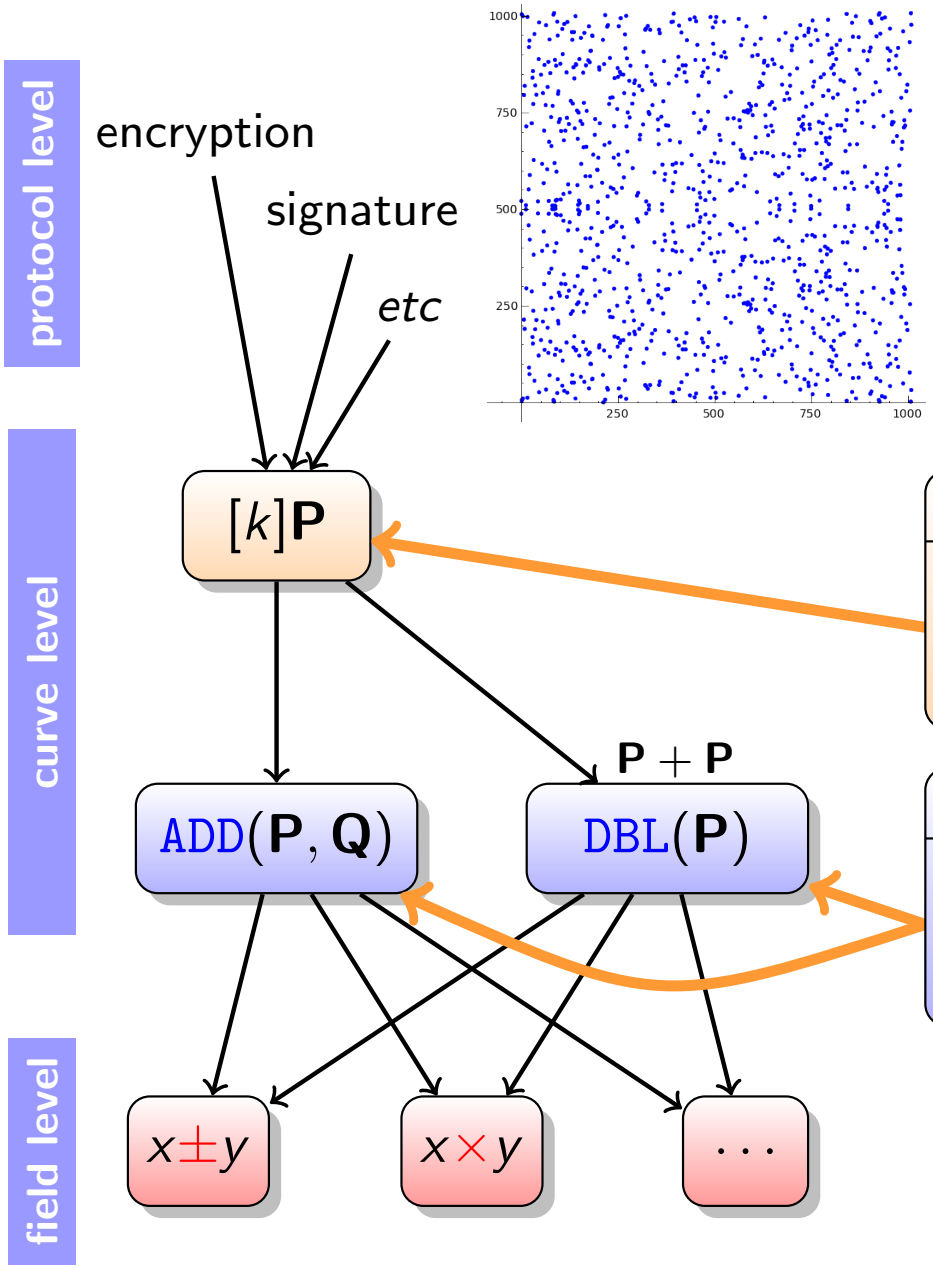

$E : y^2 = x^3 + 4x + 20$ over GF(1009)

points: $\mathbf{P}$, $\mathbf{Q} = (x, y)$ or (x, y, z) or ...

coordinates: $x, y, z \in \mathrm{GF}(\cdot)$

$\mathbb{F}_p$, $\mathbb{F}_{2^m}$, t : 80–600 bits

$k = (k_{t-1}k_{t-2}\ldots k_1k_0)_2 \in \mathbb{N}$

Scalar multiplication operation

```
for i from 0 to t − 1 do
    if k_i = 1 then Q = ADD(P, Q)
    P = DBL(P)
```

Point addition/doubling operations

sequence of finite field operations

DBL: $v_1 = z_1^2, v_2 = x_1 - v_1, \ldots$

ADD: $w_1 = z_1^2, w_2 = z_1 \times w_1, \ldots$

Introduction

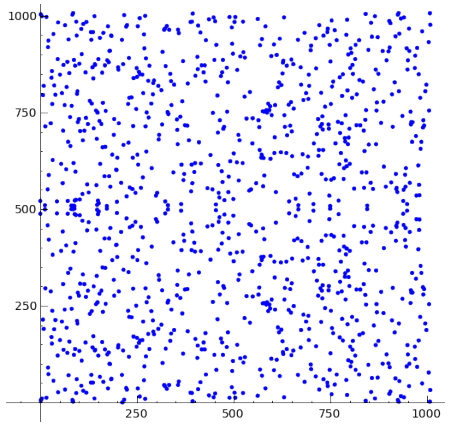

$E : y^2 = x^3 + 4x + 20$ over GF(1009)

points: $\mathbf{P}$, $\mathbf{Q} = (x, y)$ or (x, y, z) or ...

coordinates: $x, y, z \in \mathrm{GF}(\cdot)$

$\mathbb{F}_p$, $\mathbb{F}_{2^m}$, t : 80–600 bits

$k = (k_{t-1}k_{t-2}\ldots k_1k_0)_2 \in \mathbb{N}$

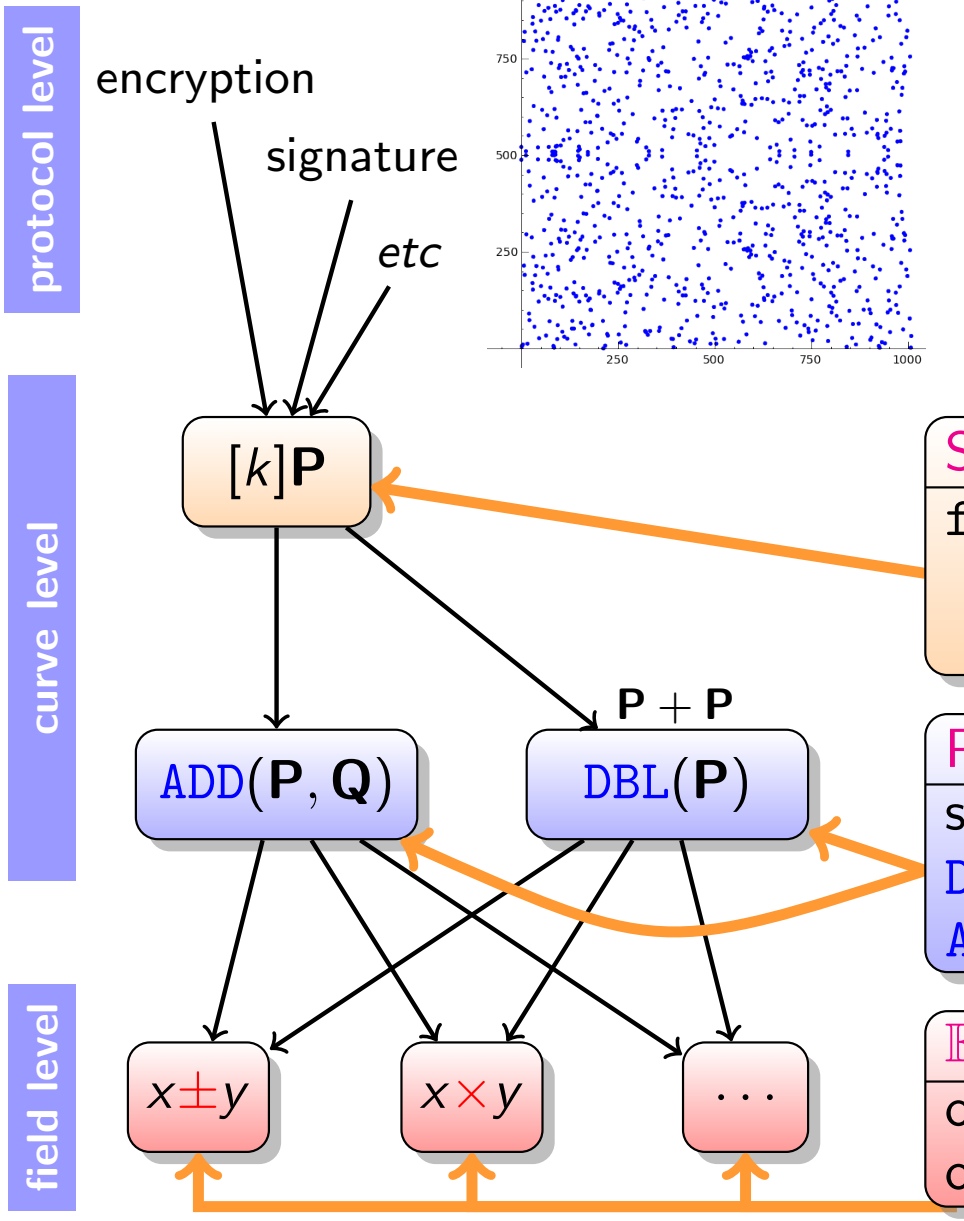

Scalar multiplication operation

```
for i from 0 to t − 1 do
    if k_i = 1 then Q = ADD(P, Q)
    P = DBL(P)
```

Point addition/doubling operations

sequence of finite field operations

DBL: $v_1 = z_1^2, v_2 = x_1 - v_1, \ldots$

ADD: $w_1 = z_1^2, w_2 = z_1 \times w_1, \ldots$

$\mathbb{F}_p$ or $\mathbb{F}_{2^m}$ operations

operation modulo large prime ($\mathbb{F}_p$)
or irreducible polynomial ($\mathbb{F}_{2^m}$)

Side Channel Attacks

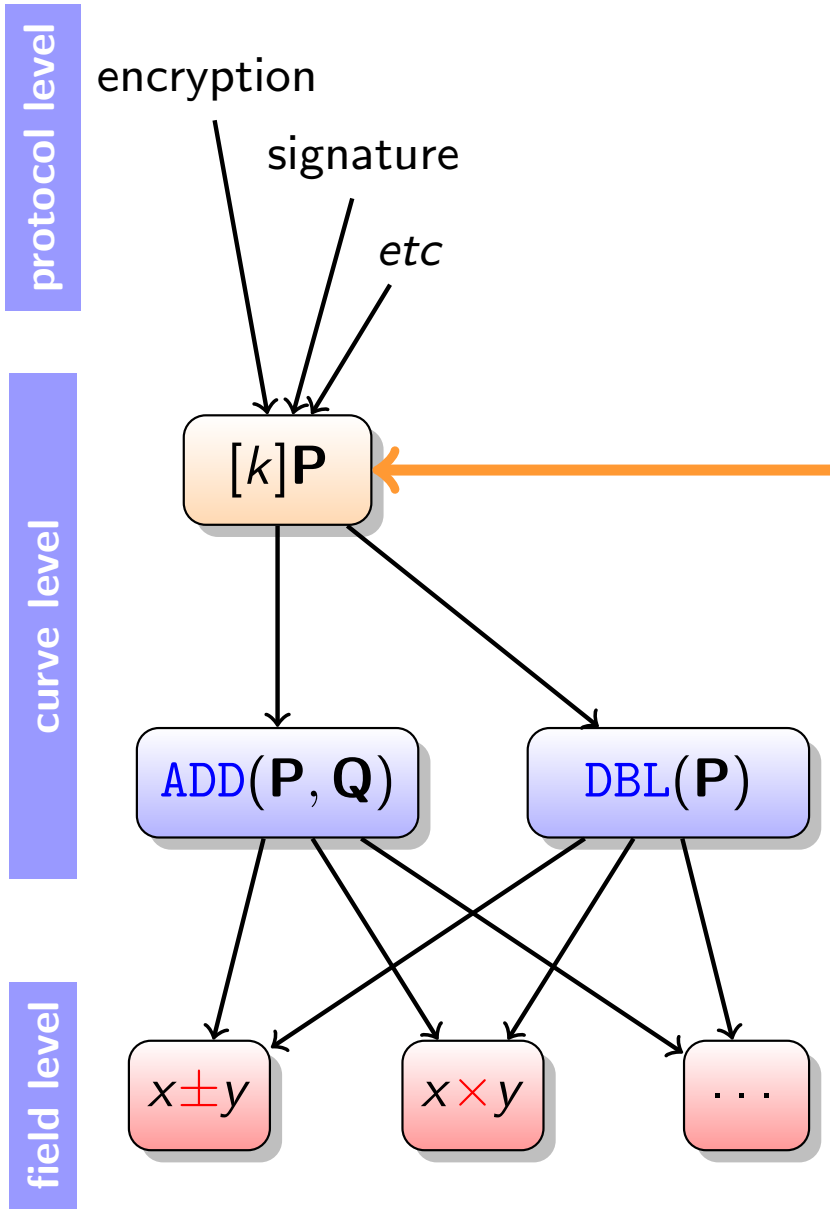

Scalar multiplication operation

```
for i from 0 to t − 1 do
    if k_i = 1 then Q = ADD(P, Q)
    P = DBL(P)
```

Side Channel Attacks

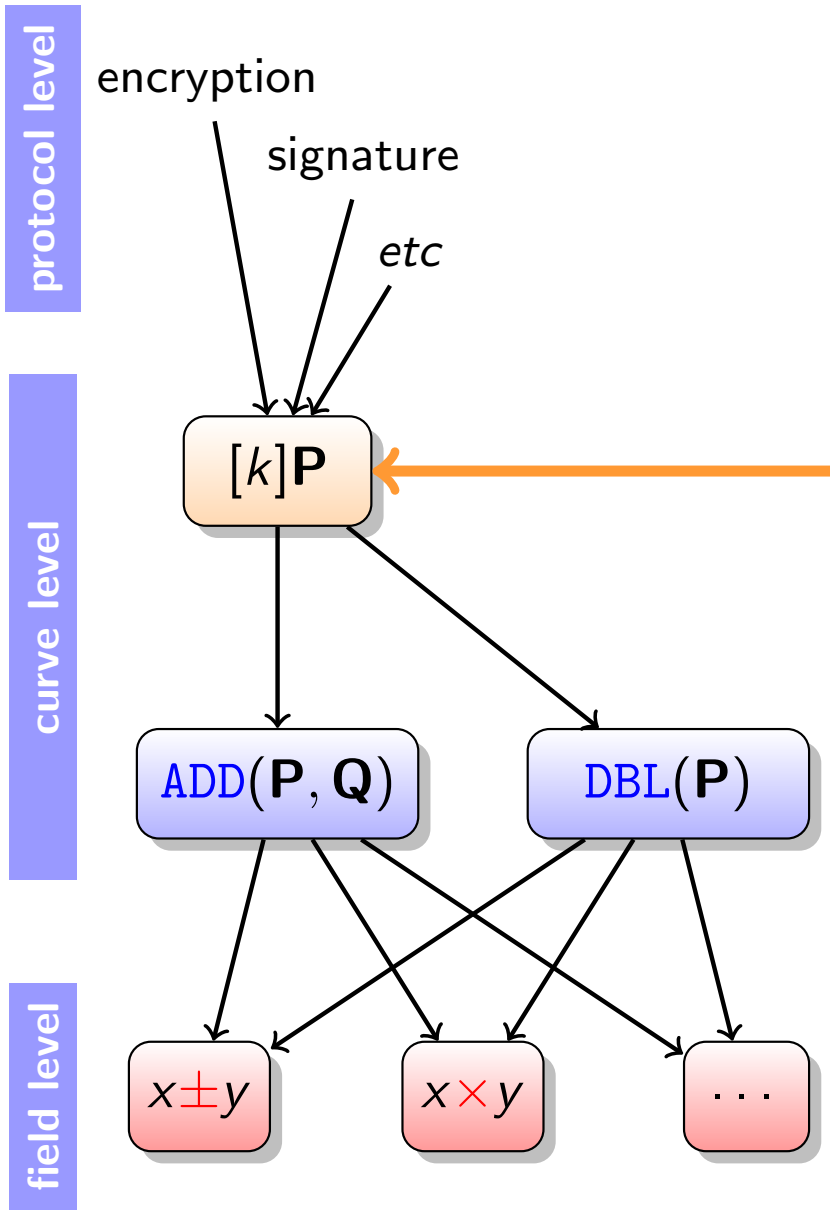

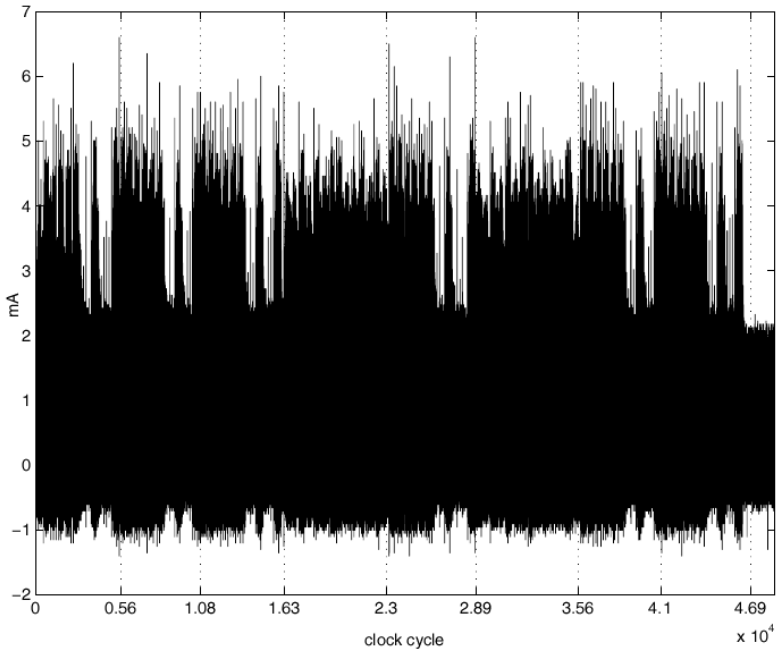

Scalar multiplication operation

```
for i from 0 to t − 1 do
    if k_i = 1 then Q = ADD(P, Q)
    P = DBL(P)
```

Side Channel Attacks

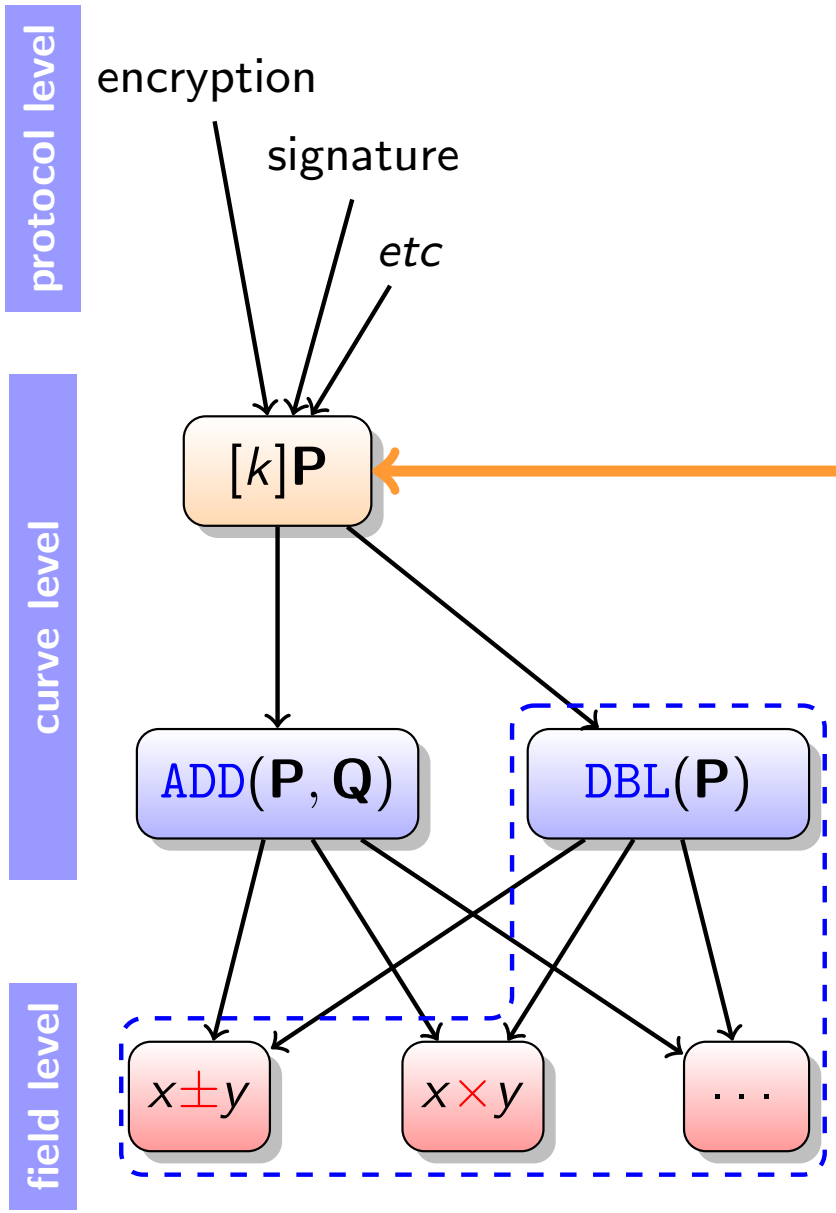

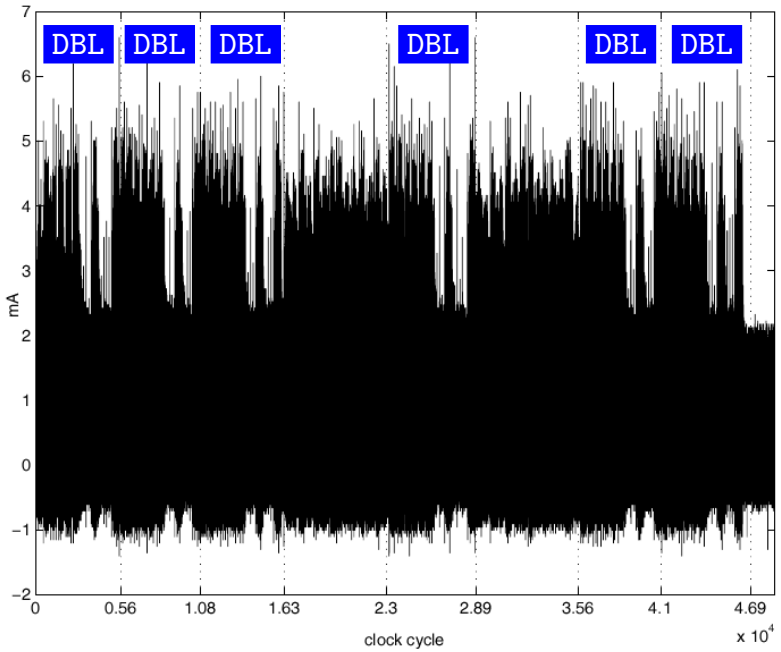

Scalar multiplication operation

```
for i from 0 to t − 1 do
    if k_i = 1 then Q = ADD(P, Q)
    P = DBL(P)
```

Side Channel Attacks

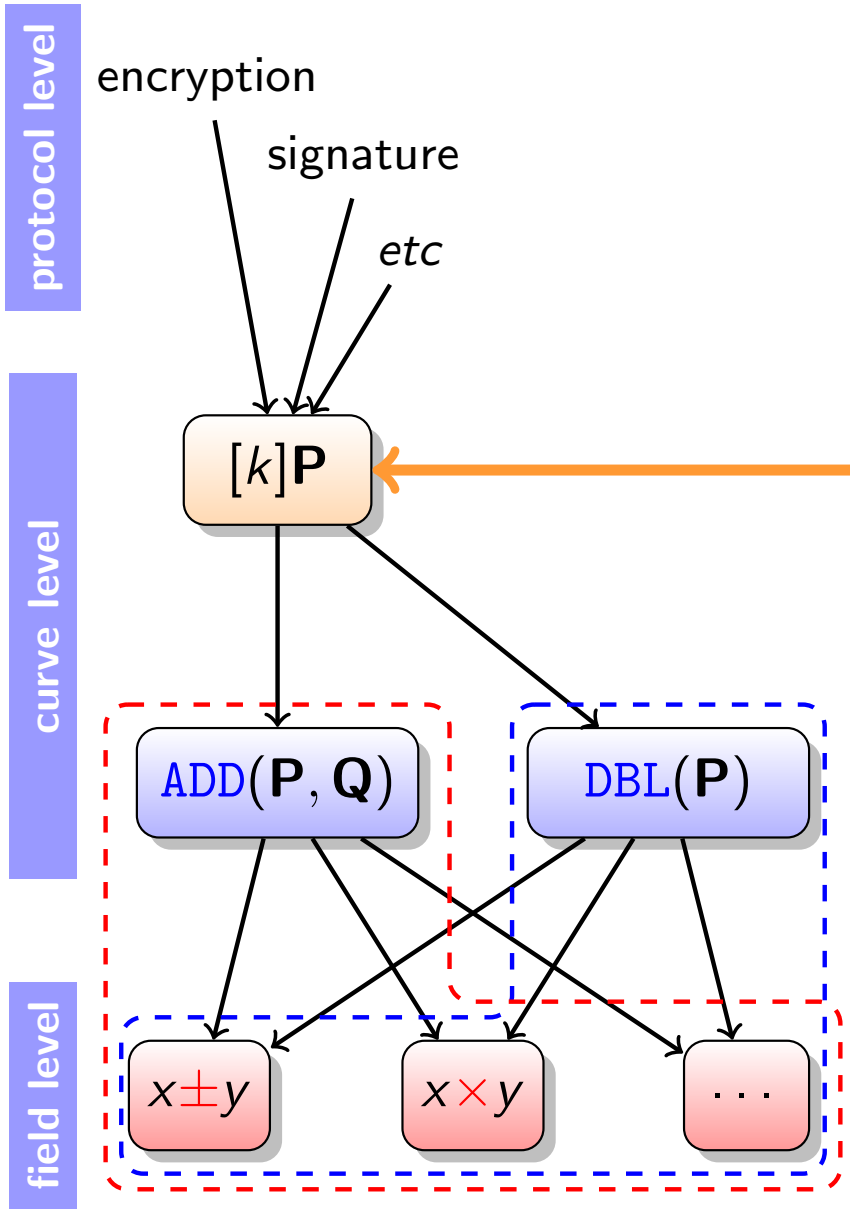

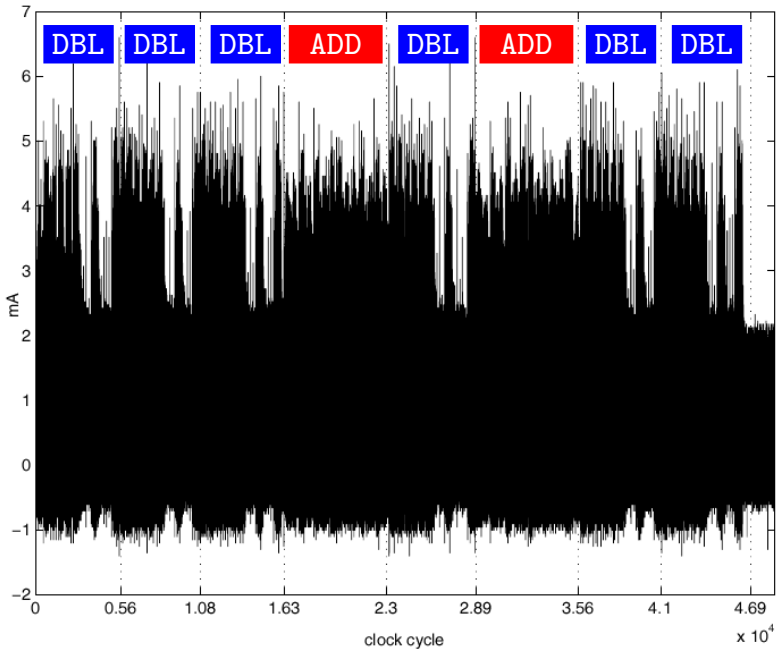

Scalar multiplication operation

```
for i from 0 to t − 1 do
    if k_i = 1 then Q = ADD(P, Q)
    P = DBL(P)
```

Side Channel Attacks

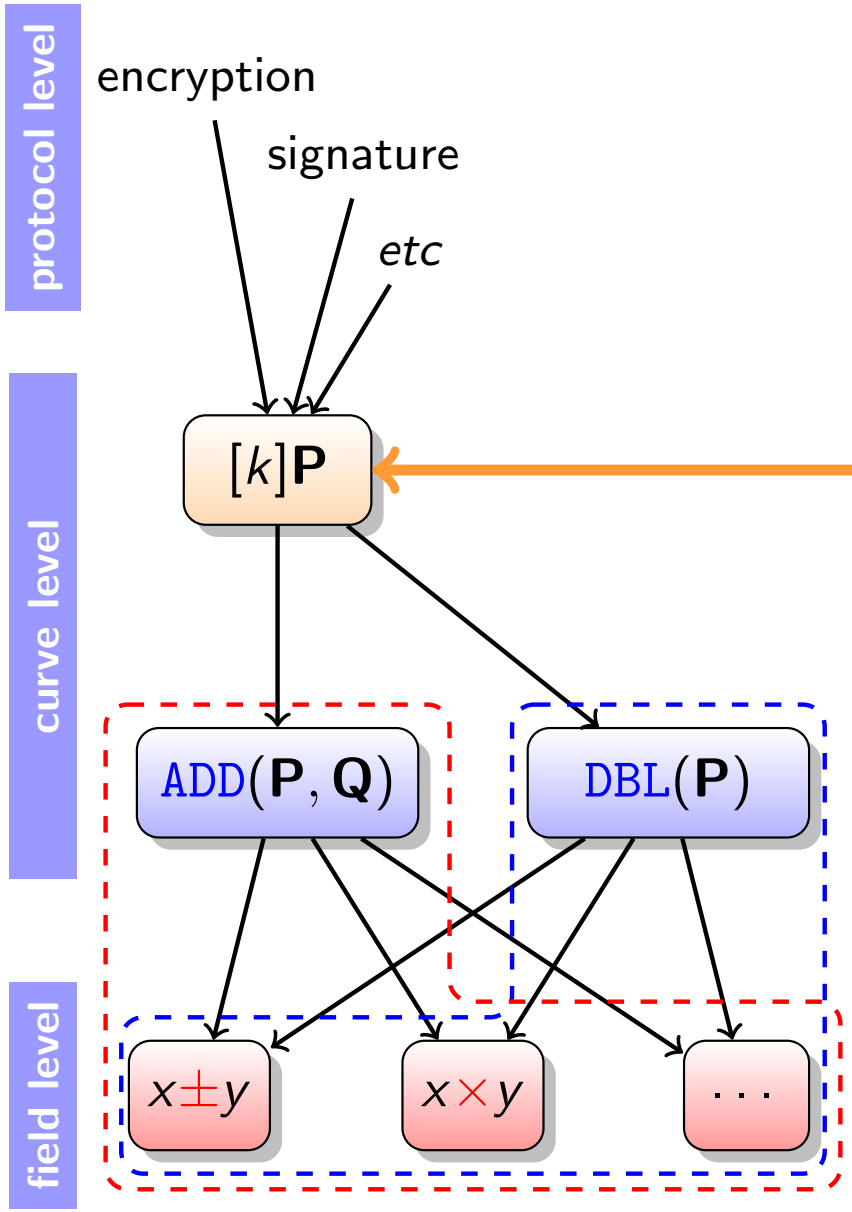

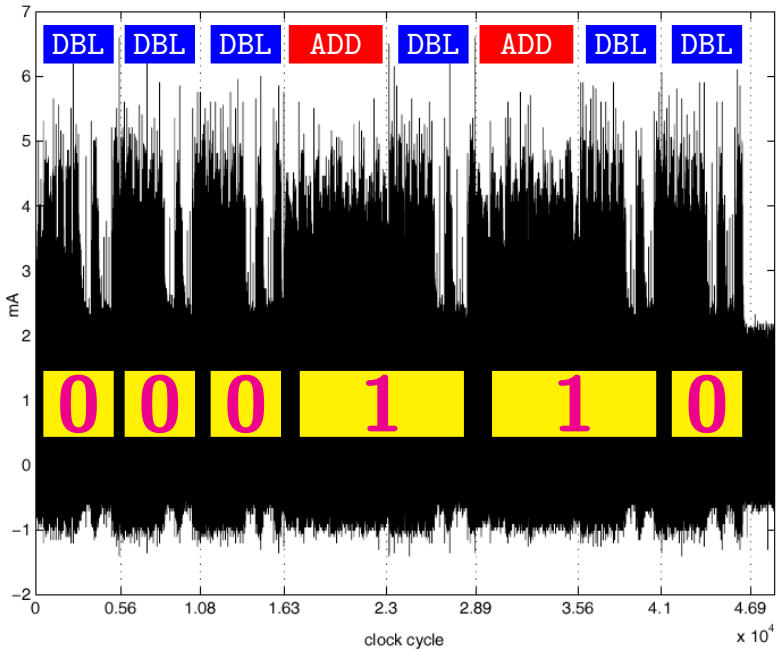

Scalar multiplication operation

```
for i from 0 to t − 1 do
    if k_i = 1 then Q = ADD(P, Q)
    P = DBL(P)
```

- simple power analysis (& variants)

Side Channel Attacks

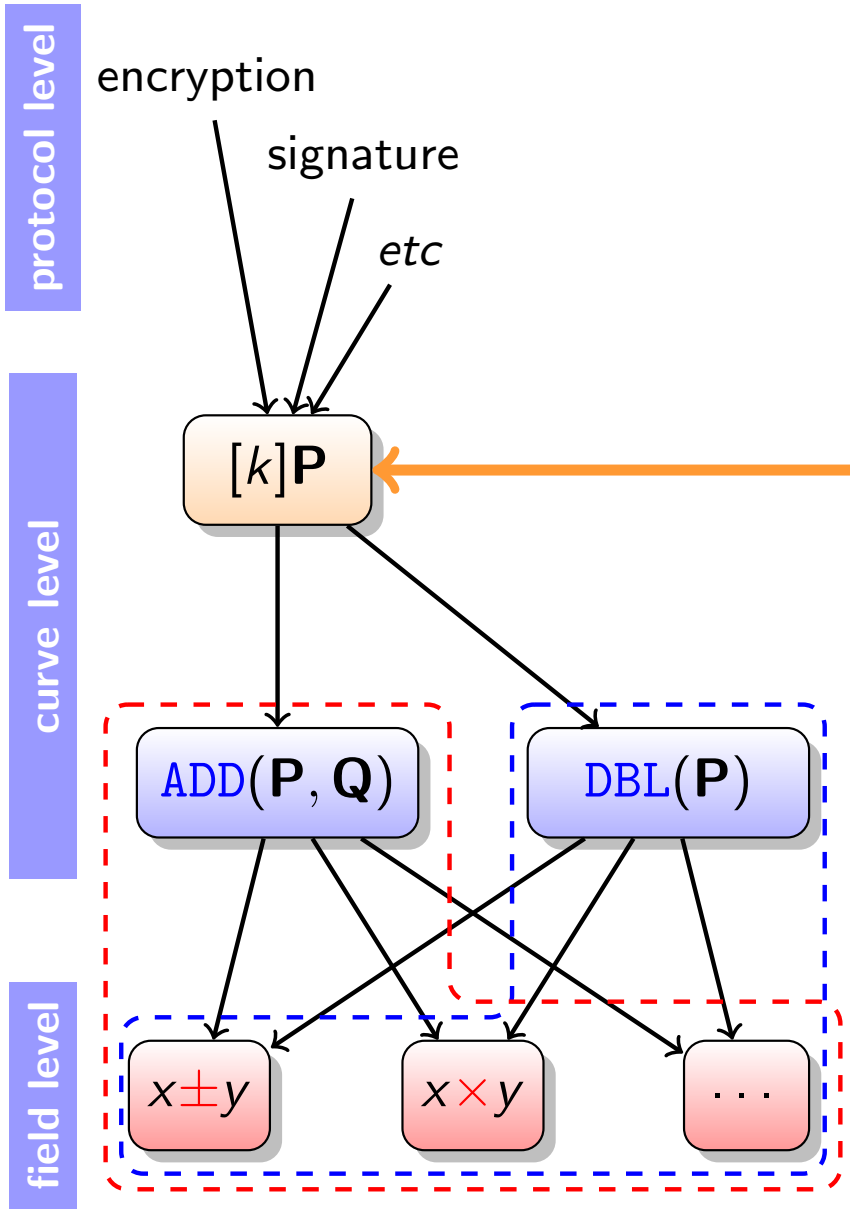

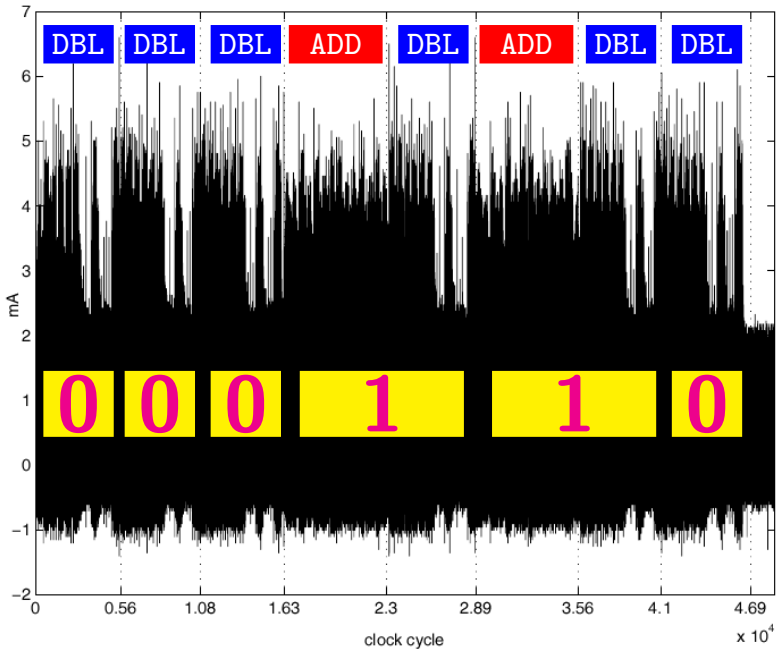

Scalar multiplication operation

```
for i from 0 to t − 1 do
    if k_i = 1 then Q = ADD(P, Q)
    P = DBL(P)
```

- simple power analysis (& variants)
- differential power analysis (& variants)
- horizontal/vertical/... attacks

Objectives of Our Research Group

- Study and implementation of efficient hardware supports:
  - Cryptography over (hyper)-elliptic curves (H)ECC
  - Operations over finite fields $\mathbb{F}_p$ & $\mathbb{F}_{2^m}$ and curve points
  - Hardware targets: FPGAs and ASICs
  - Flexibility $\rightsquigarrow$ programmable in software

- Study and implementation of protections against physical attacks:
  - Passive attacks: measure of power consumption, electromagnetic radiations, timings
  - Active attacks: fault injection (*in progress*)

- Levels: algorithm, representation, operator, architecture, circuit

- Trade-offs between: performance, cost (area/energy), security

- Study, development and distribution of an *open source* (H)ECC accelerator and its programming tools

Accelerator Specifications

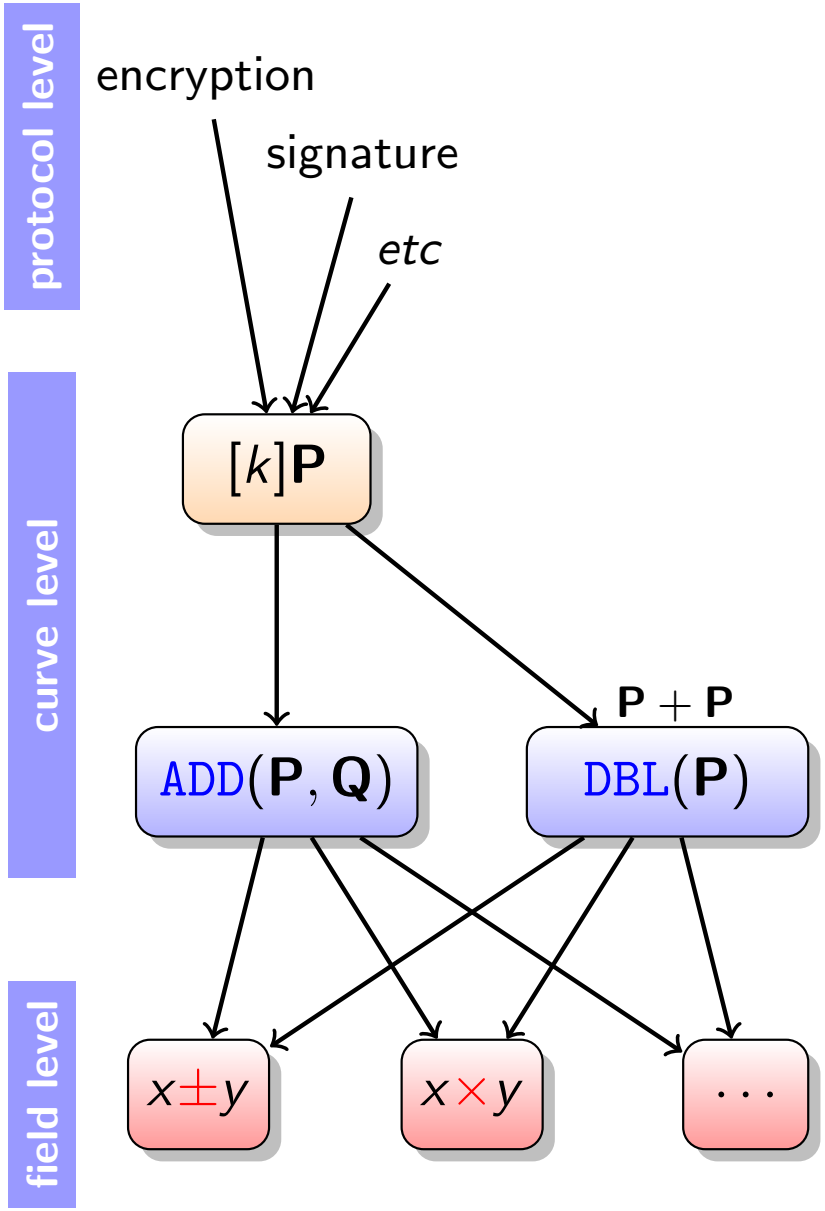

Accelerator Specifications

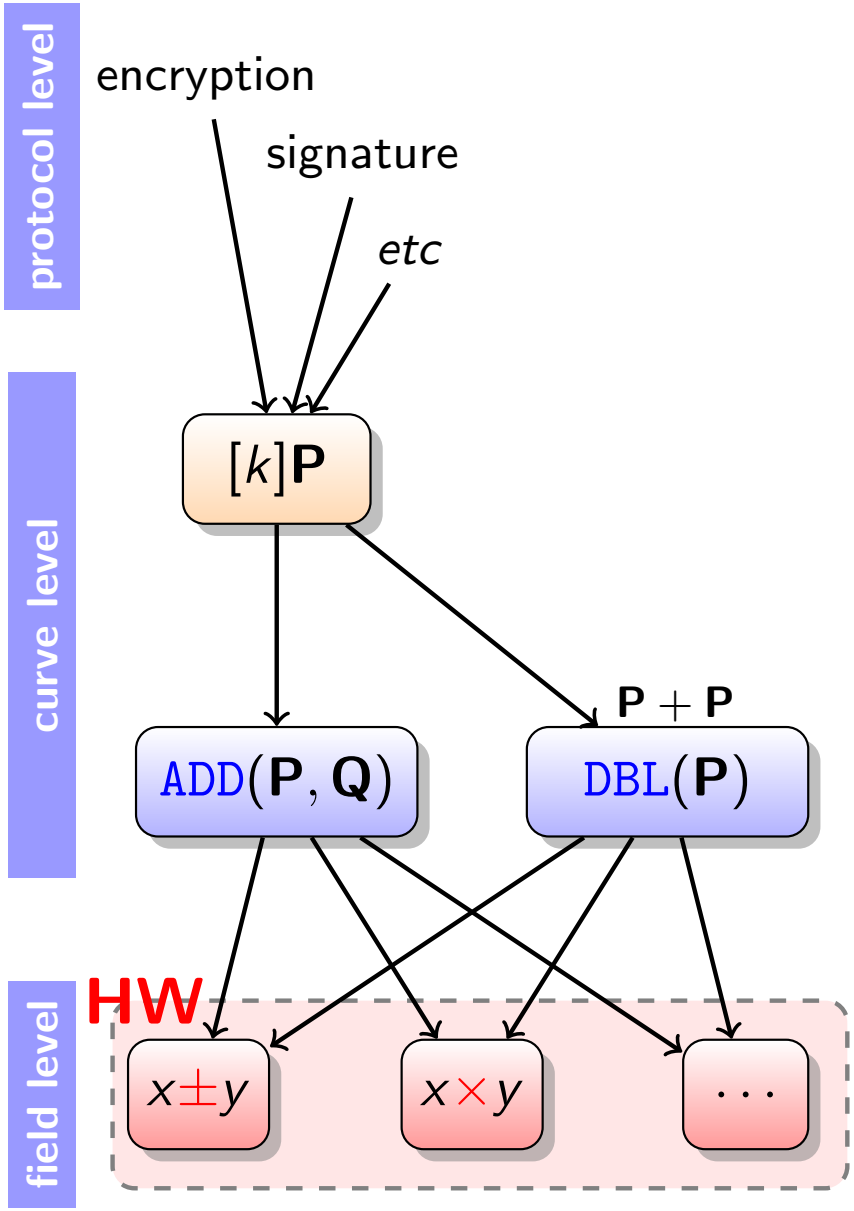

- Performances $\Longrightarrow$ hardware (**HW**)
  - dedicated functional units
  - internal parallelism
- Limited cost (embedded systems)
  - reduced silicon area
  - low energy (& power consumption)
  - large area used at each clock cycle

Accelerator Specifications

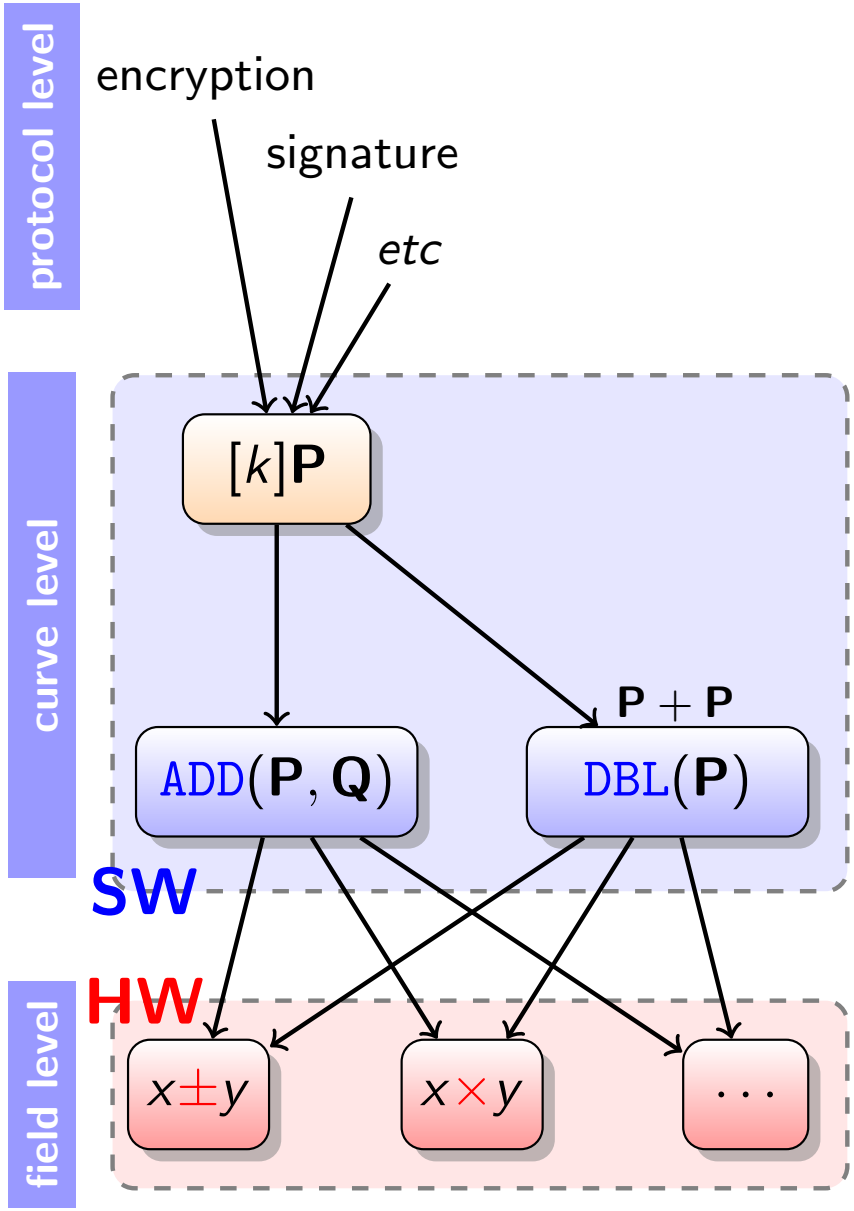

- Performances $\Longrightarrow$ hardware (**HW**)
  - dedicated functional units
  - internal parallelism
- Limited cost (embedded systems)
  - reduced silicon area
  - low energy (& power consumption)
  - large area used at each clock cycle
- Flexibility $\Longrightarrow$ software (**SW**)
  - curves, algorithms, representations (points/elements), k recoding, ...
  - at design time / at run time

Accelerator Specifications

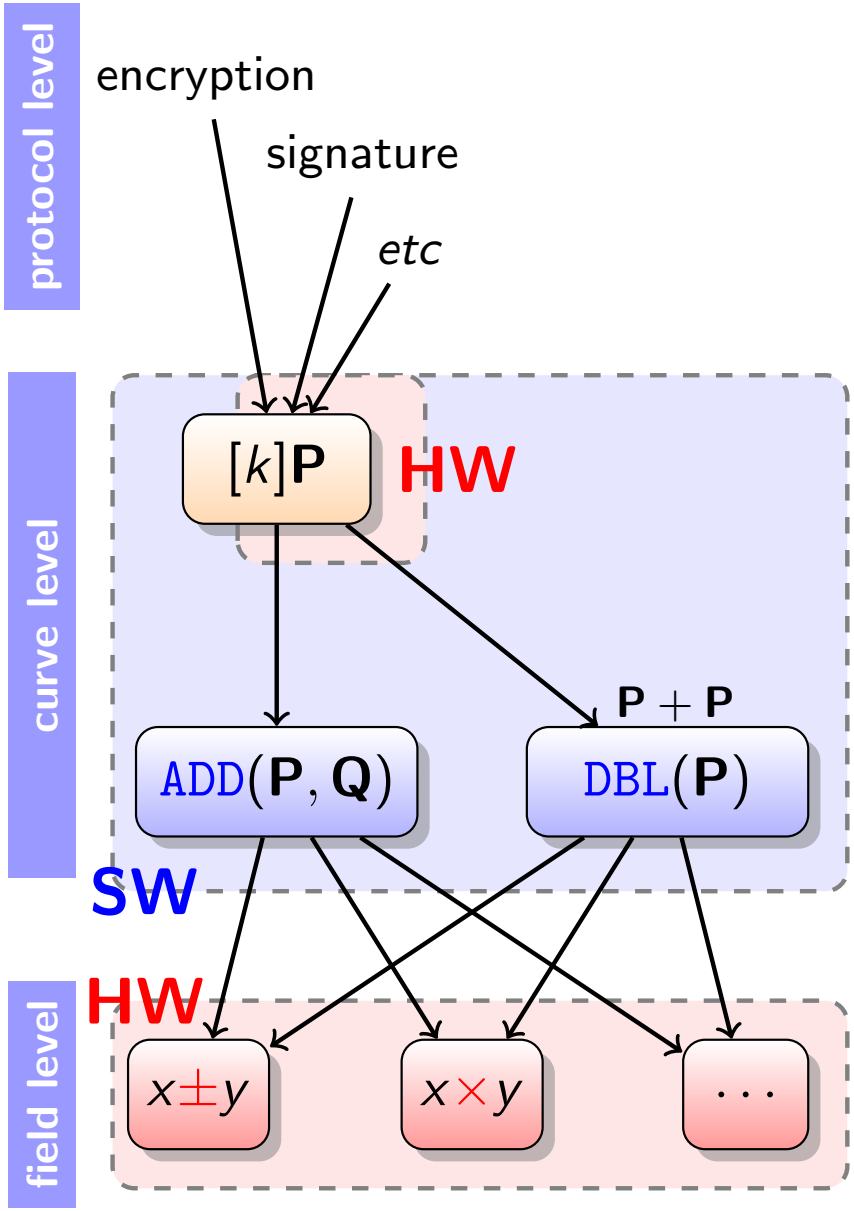

- Performances $\Longrightarrow$ hardware (**HW**)
  - dedicated functional units
  - internal parallelism
- Limited cost (embedded systems)
  - reduced silicon area
  - low energy (& power consumption)
  - large area used at each clock cycle
- Flexibility $\Longrightarrow$ software (**SW**)
  - curves, algorithms, representations (points/elements), k recoding, ...
  - at design time / at run time
- Security against SCAs $\Longrightarrow$ **HW**
  - secure units ($\mathbb{F}_{2^m}$, $\mathbb{F}_p$)
  - secure key storage/management
  - secure control

Accelerator Architecture

Accelerator Architecture

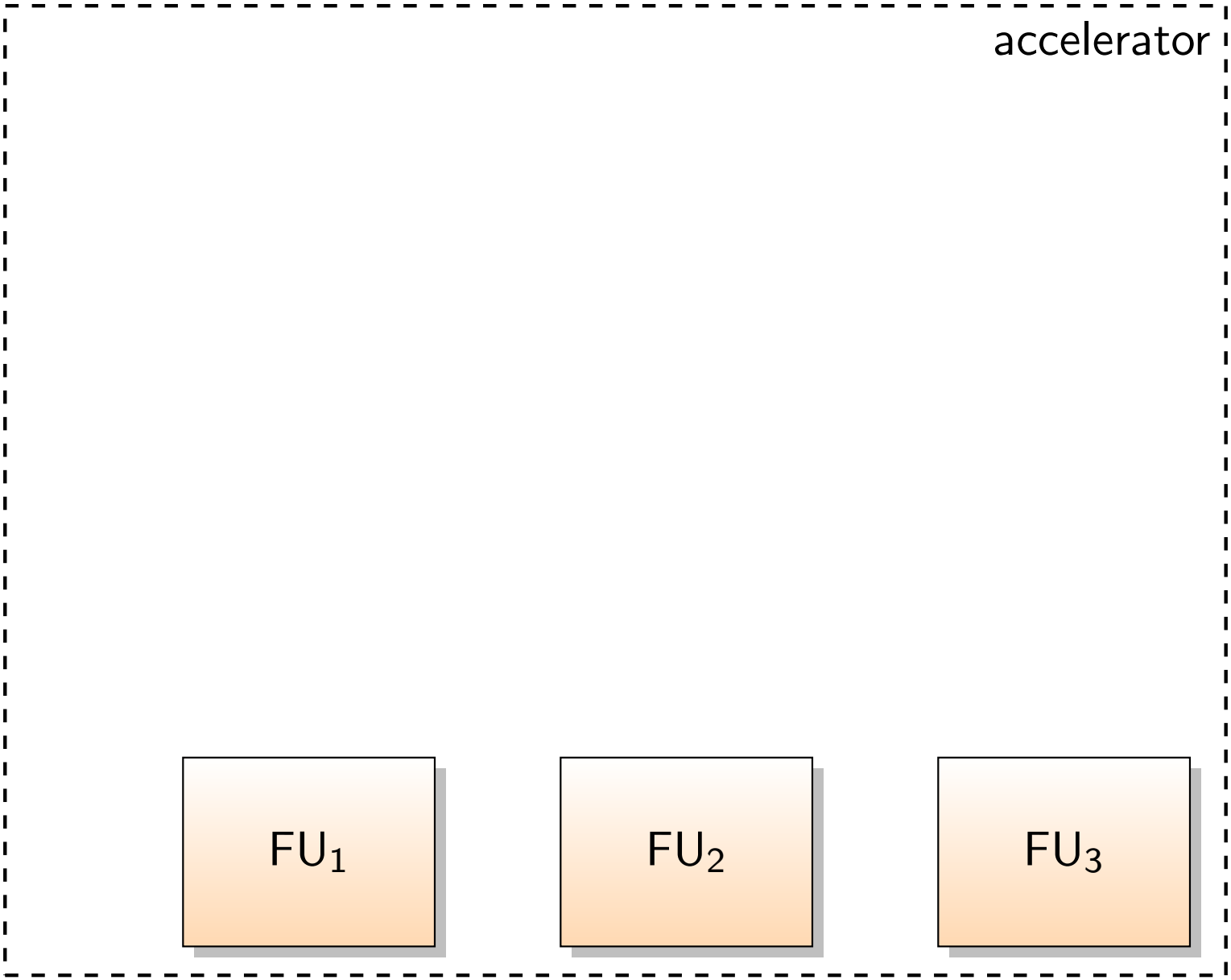

Accelerator Architecture

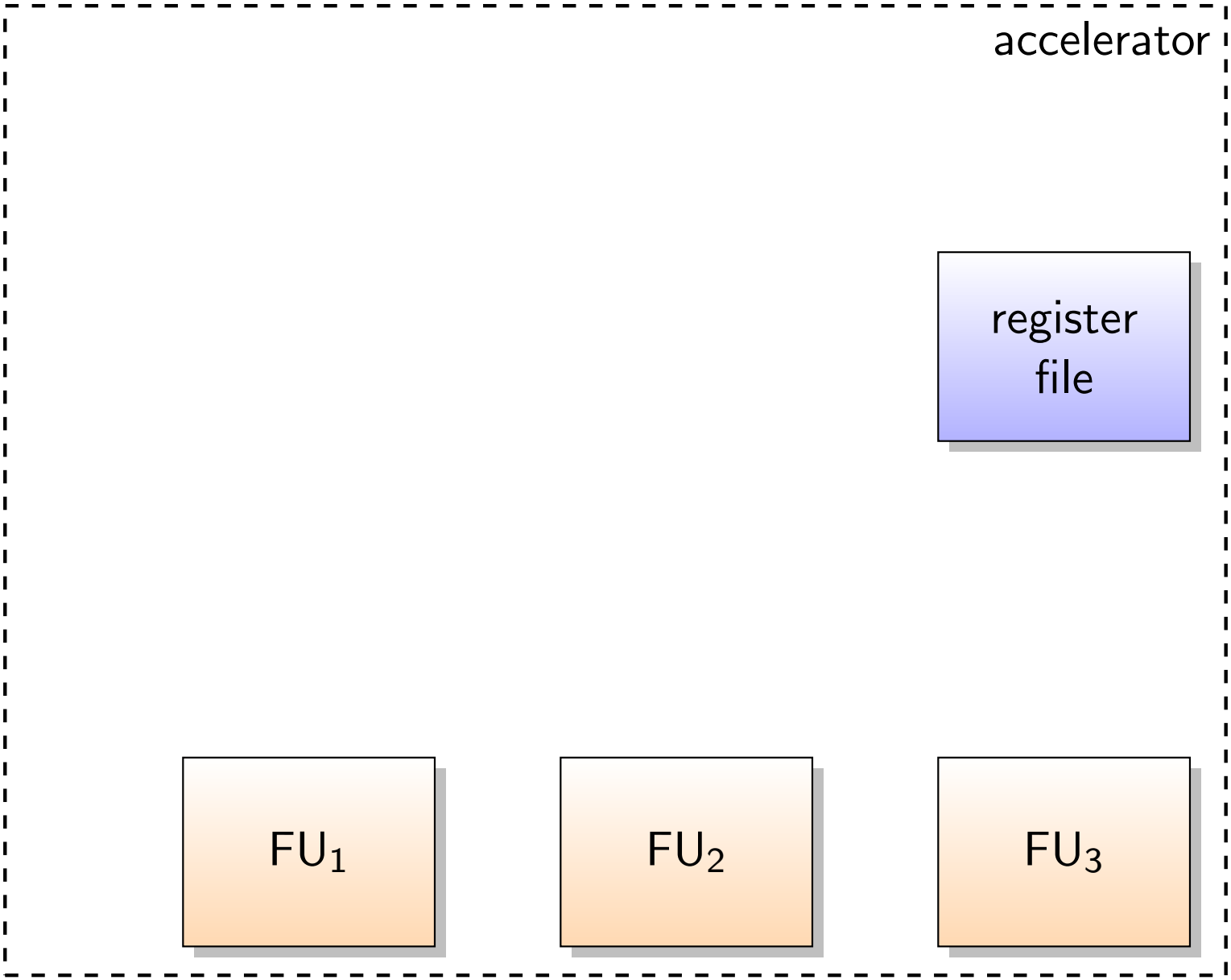

Accelerator Architecture

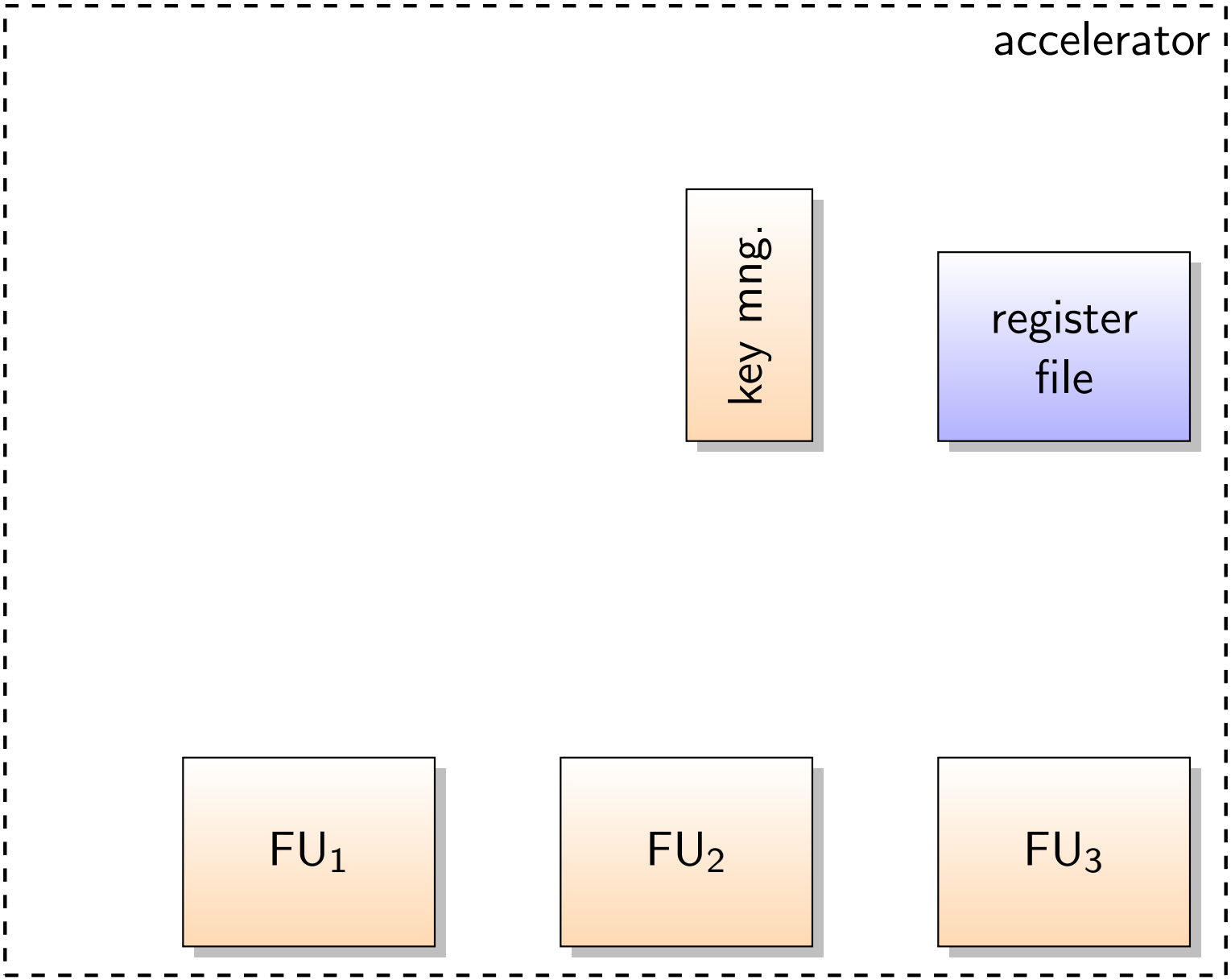

Accelerator Architecture

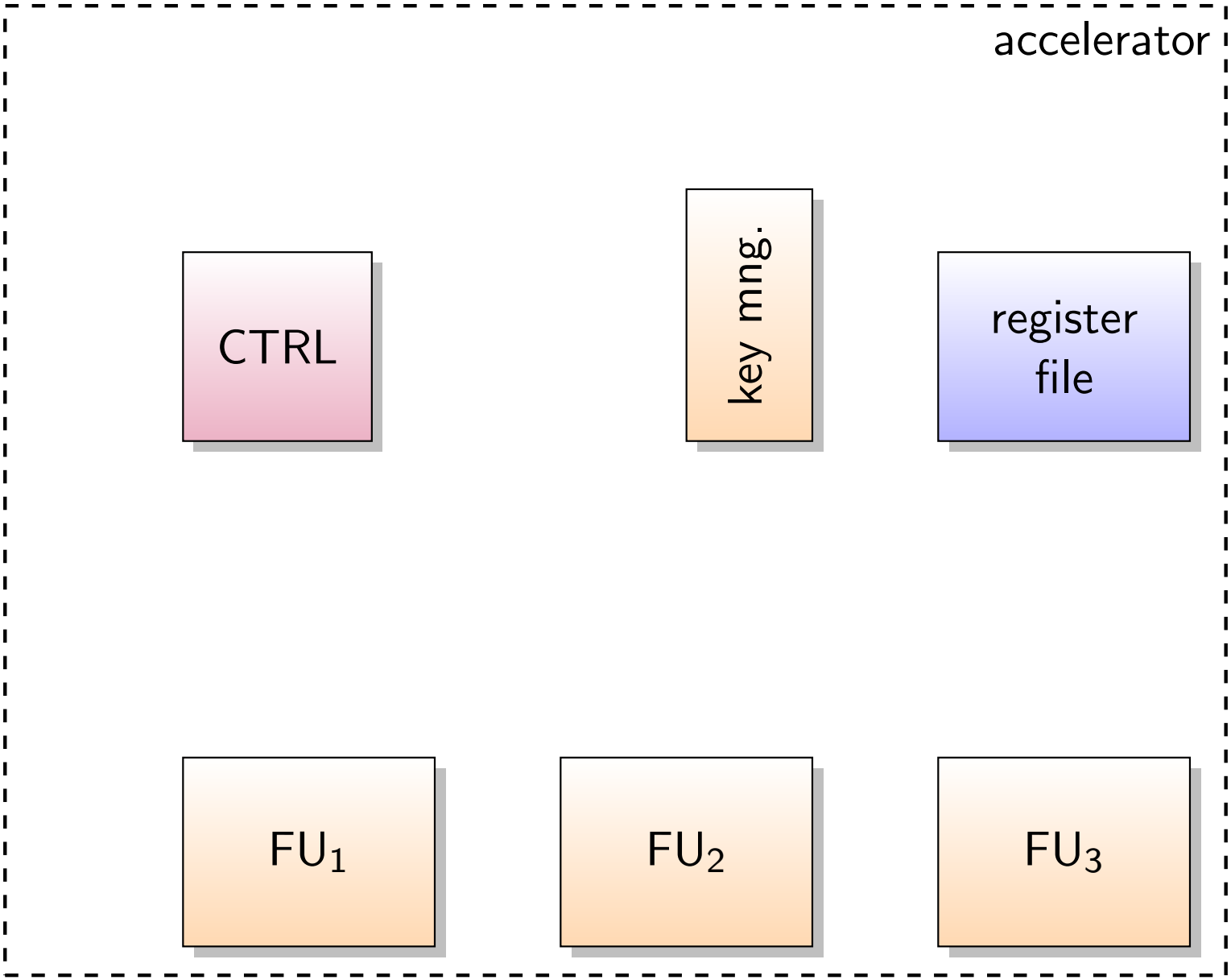

Accelerator Architecture

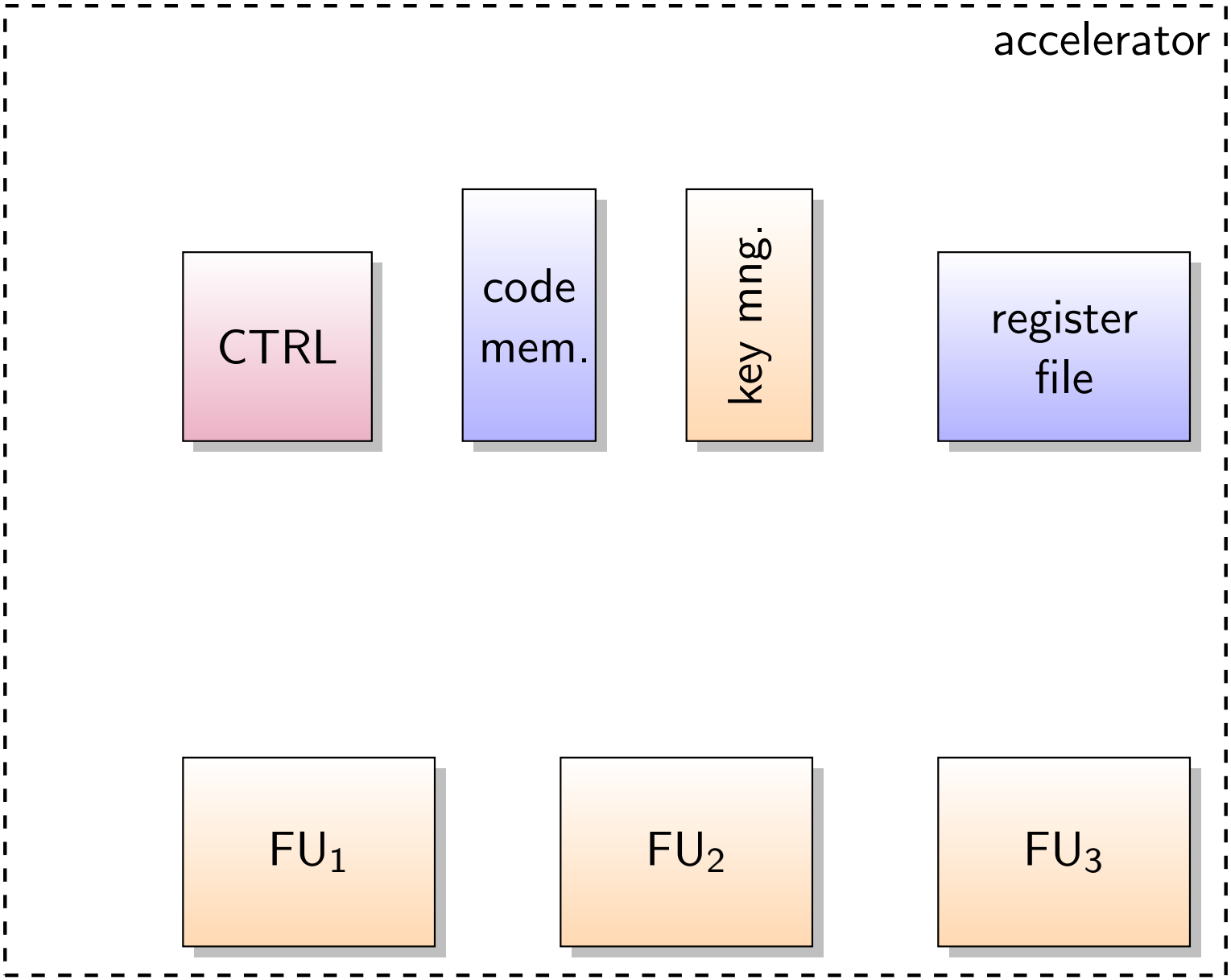

Accelerator Architecture

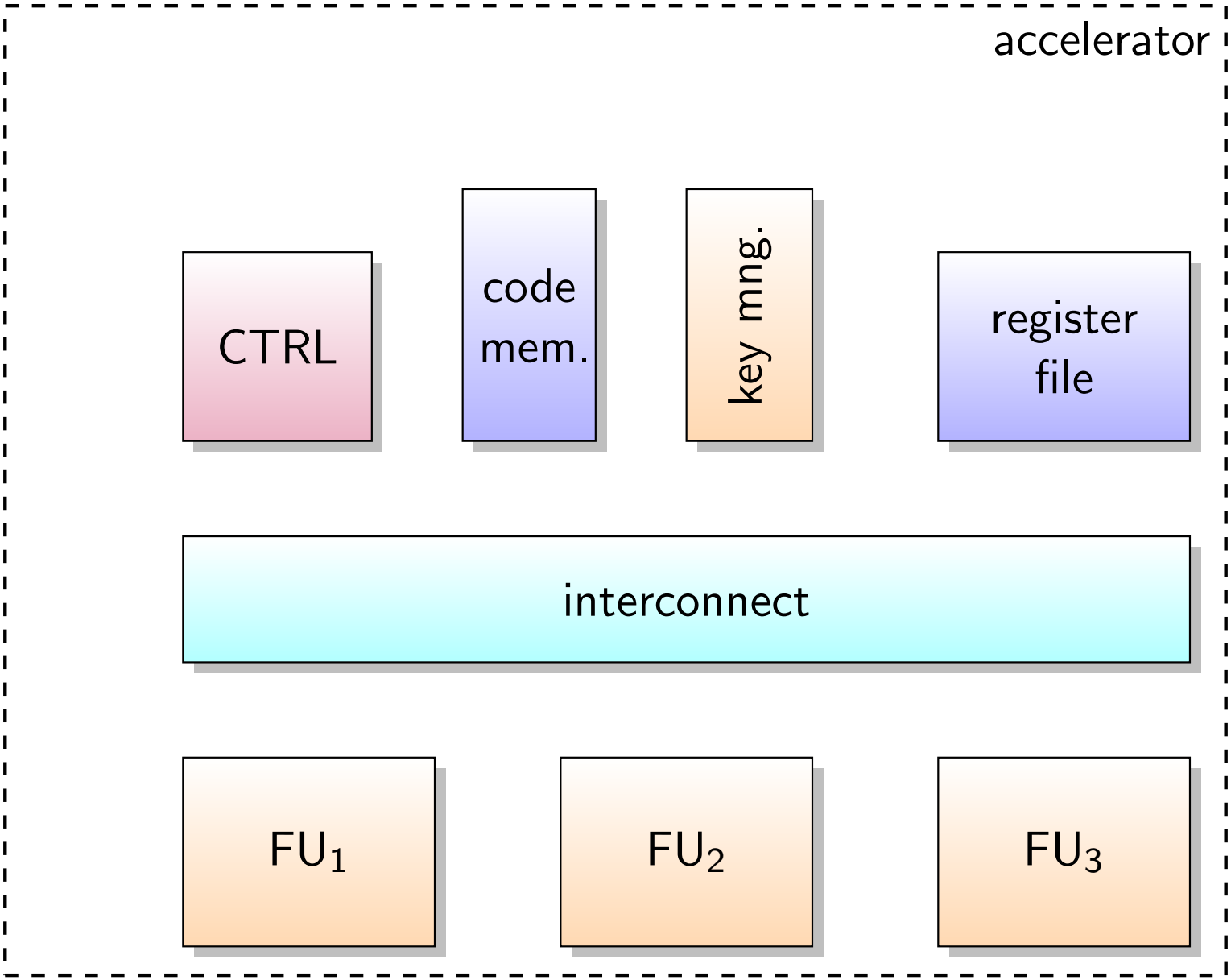

Accelerator Architecture

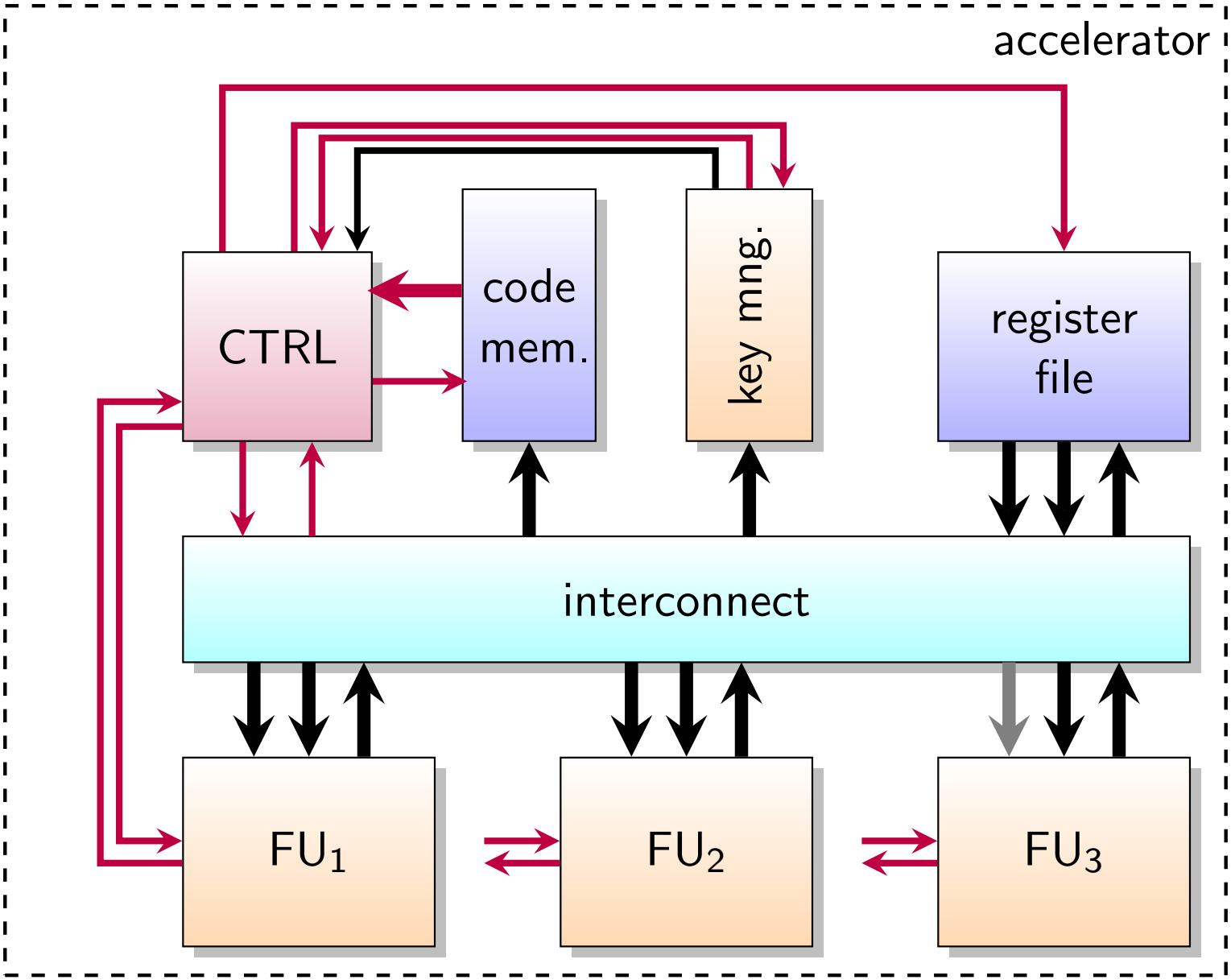

Data: w-bit $(32, \ldots, 128)$ except for k digits, **control**: a few bits per unit

Accelerator Architecture

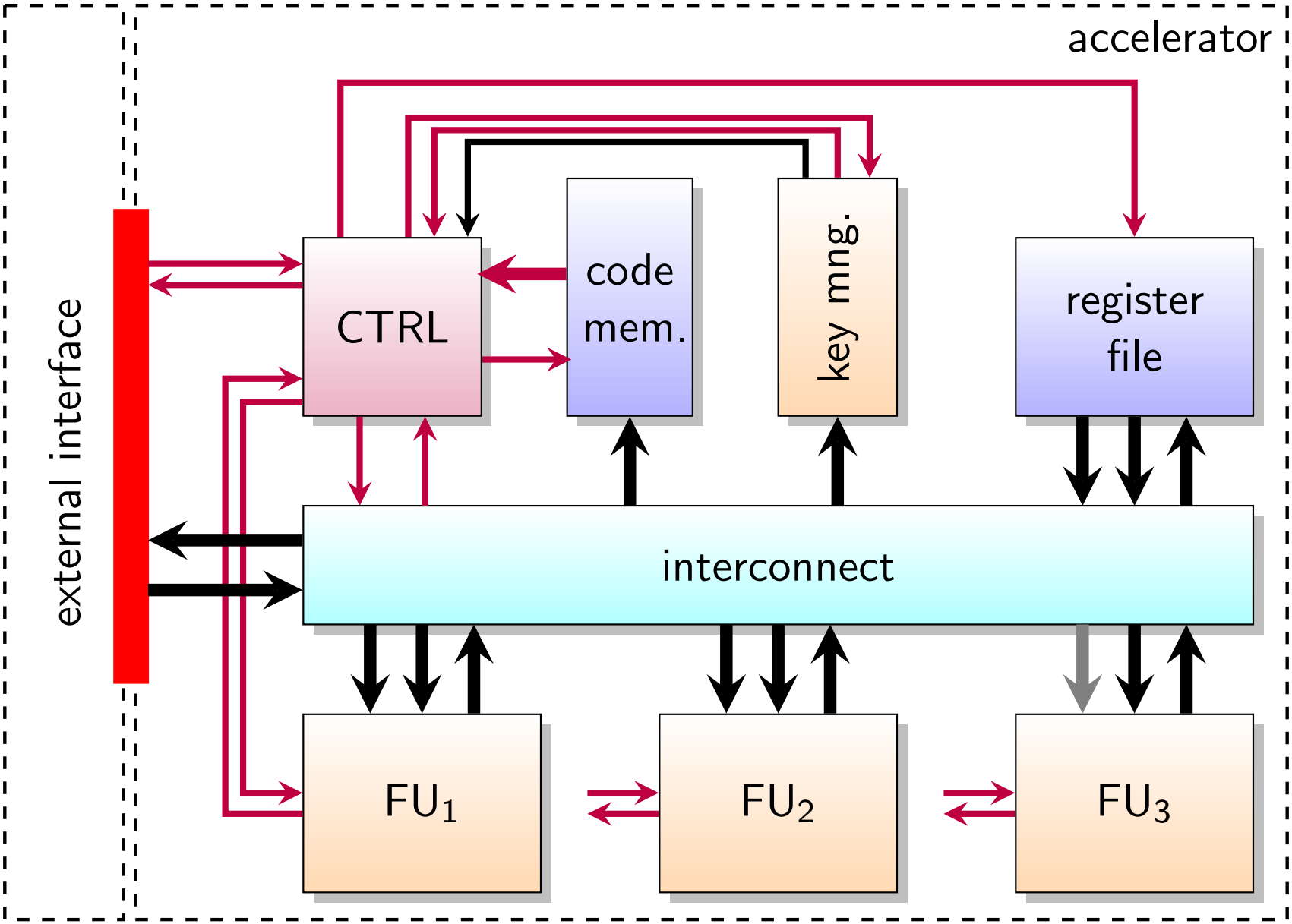

Data: w-bit $(32, \ldots, 128)$ except for k digits, **control**: a few bits per unit

Functional Units for Field Level Operations

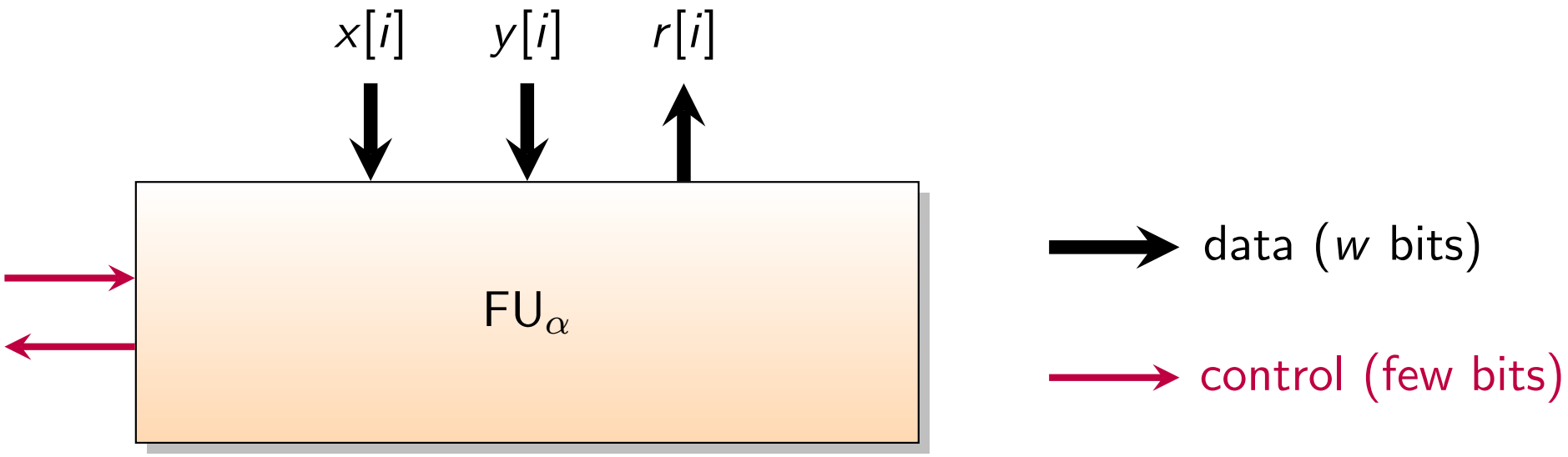

Notation: $x[i]$ is the i-th w-bit word of $x \in \mathbb{F}_q$

Units:

- $\mathbb{F}_p$: addition/subtraction, multiplication (2-step, Montgomery, variants), inversion
- $\mathbb{F}_{2^m}$ (polynomial basis, normal basis & variants): addition/subtraction, multiplication (Montgomery, Mastrovito, 2-step), square, inversion

Internal parameters: nb of sub-blocks, radix, pipelining scheme, countermeasure, mapping of local registers, output/input bypass, ...

Register File (≈ Dual Port Memory)

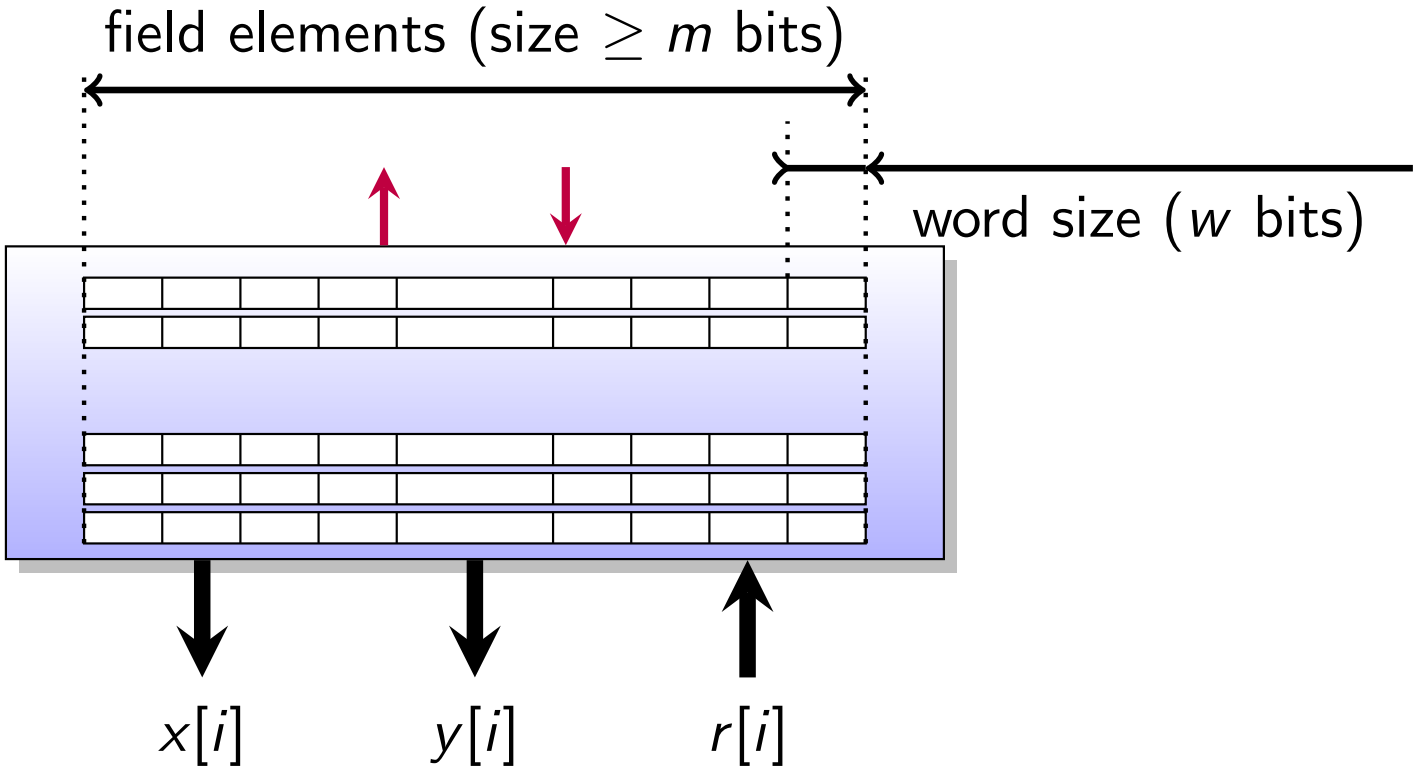

Control signals: addresses (port A, port B), read/write, write enable

Specific addressing model for $\mathbb{F}_q$ elements (through an intermediate address table with hardware loop)

- linear addresses, SW: `LOAD @x` $\Longrightarrow$ HW: loop $x[0], x[1], \ldots x[\ell - 1]$
- randomized addresses

Key Management Unit

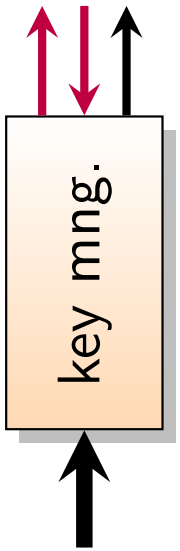

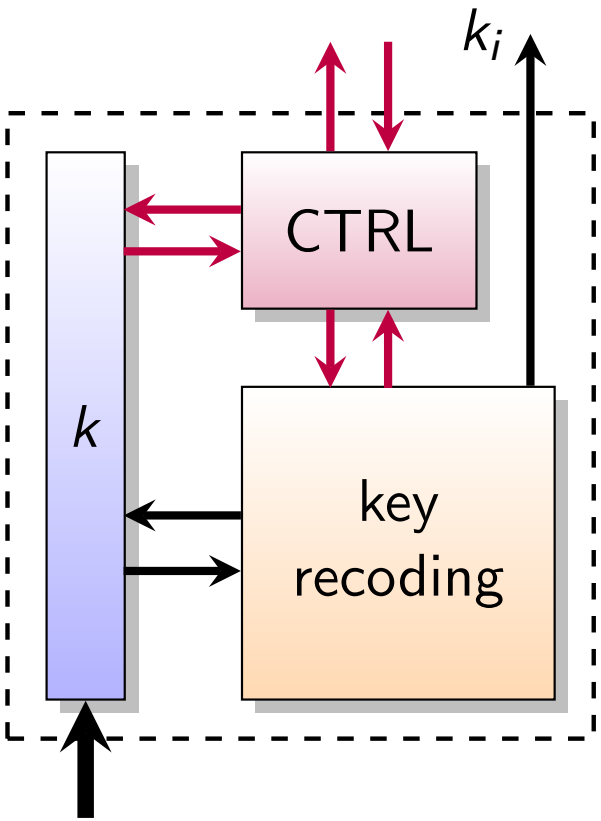

- On-the-fly recoding of k: binary, λ-NAF ($\lambda \in \{2, 3, 4, 5\}$), variants (fixed/sliding), double-base [1] and multiple-base [2] number systems (w/wo randomization), addition chains [12], other ?
- Specific private path in the interconnect (no key leaks in RF or FUs)

External Interface(s)

Under development:

- Basic (neither clock rate nor width adaptation)
- ARM Cortex cores in Zynq 7 FPGAs (through AXI bus)
- MicroBlaze softcore processor for Xilinx FPGAs
  - AXI bus (V6+)
  - PLB bus (V2 – V5)
- Specific for a "small" ASIC pad ring

Future development:

- NIOS softcore processor for Altera FPGAs
- LEON softcore processor (depending on internal demand)

Protected $\mathbb{F}_{2^m}$ Multipliers

Unprotected

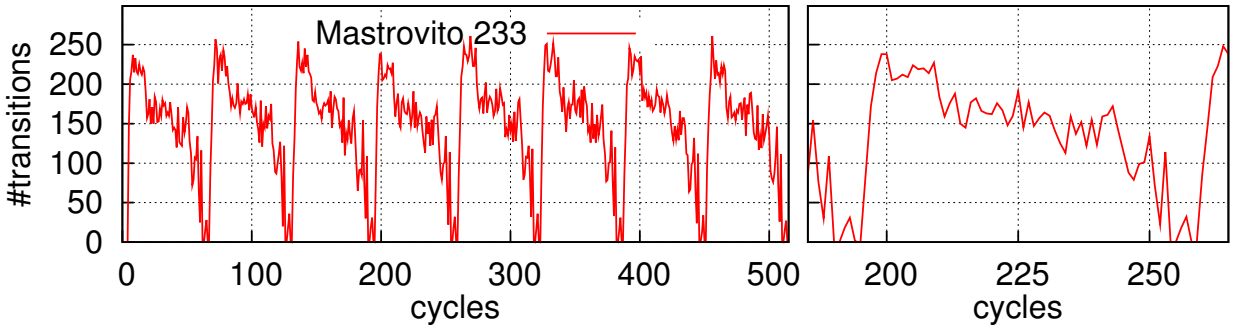

Protected $\mathbb{F}_{2^m}$ Multipliers

Unprotected

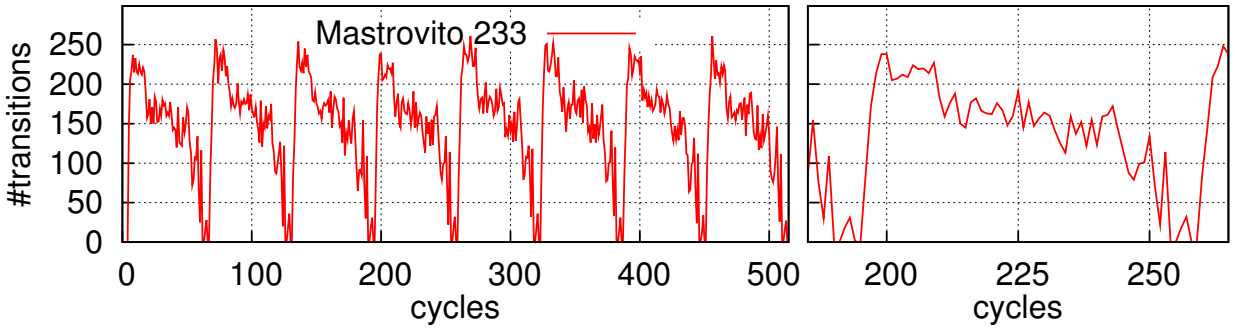

Protected

Overhead:
Area/time $< 10\,\%$

References:
PhD D. Pamula [8]
Articles: [11], [10], [9]

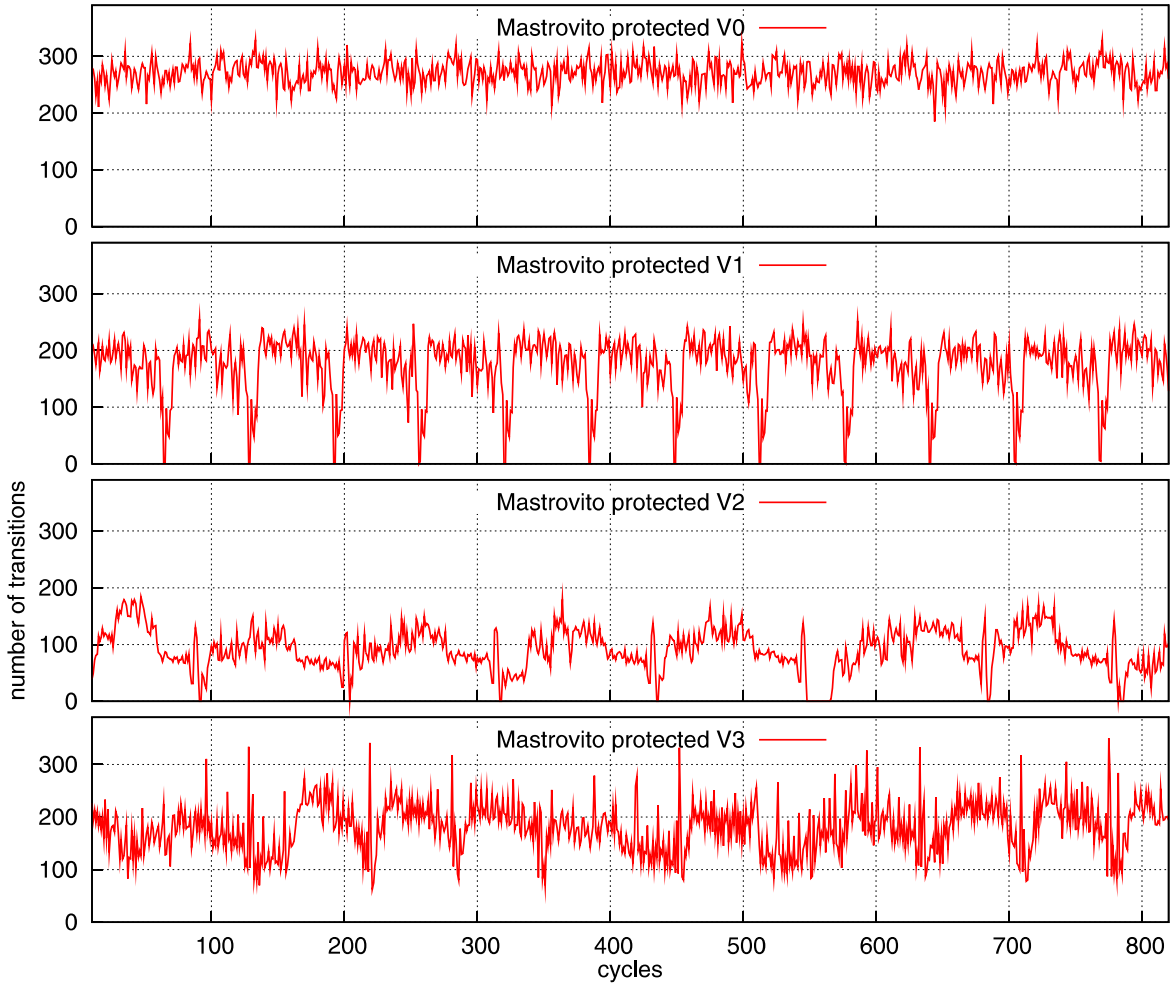

Protected (Old) Accelerator for $\mathbb{F}_{2^m}$

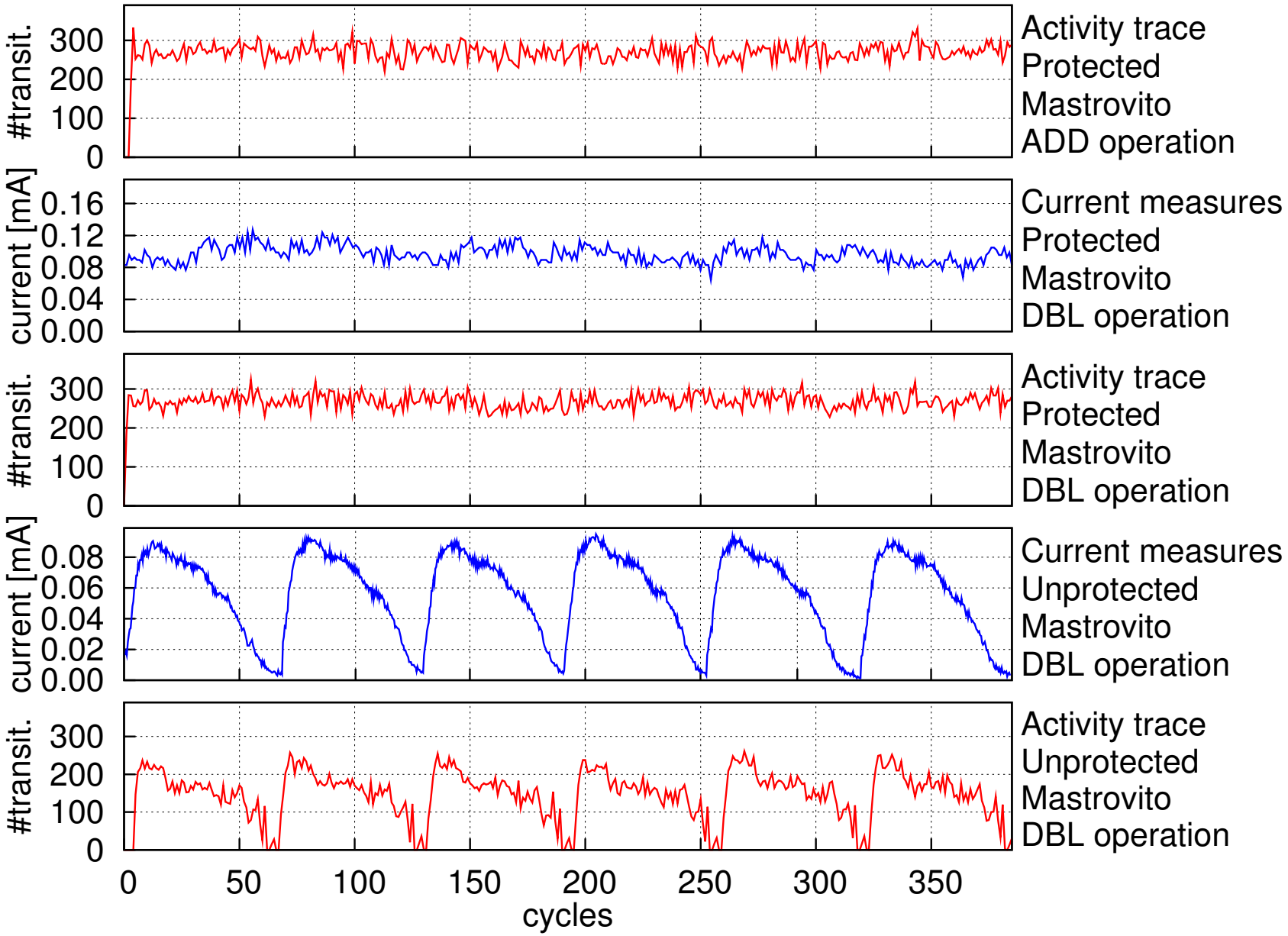

Warning: old dedicated accelerator (similar behavior is expected for our new one)

Circuit-Level Protections for Arithmetic Operators

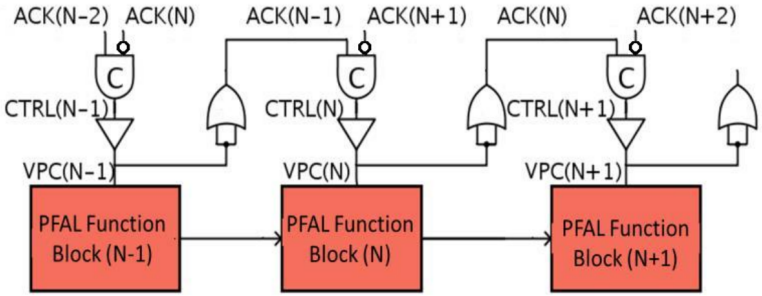

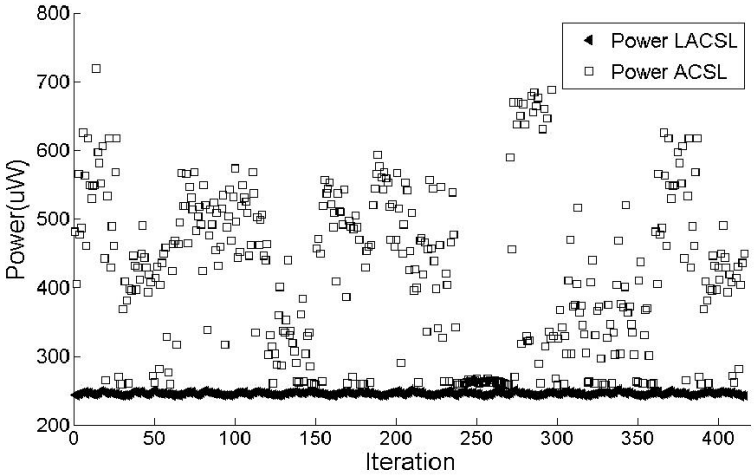

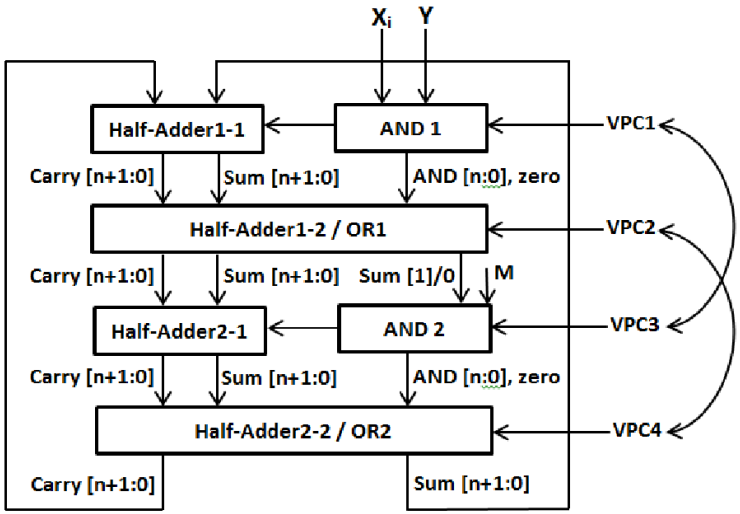

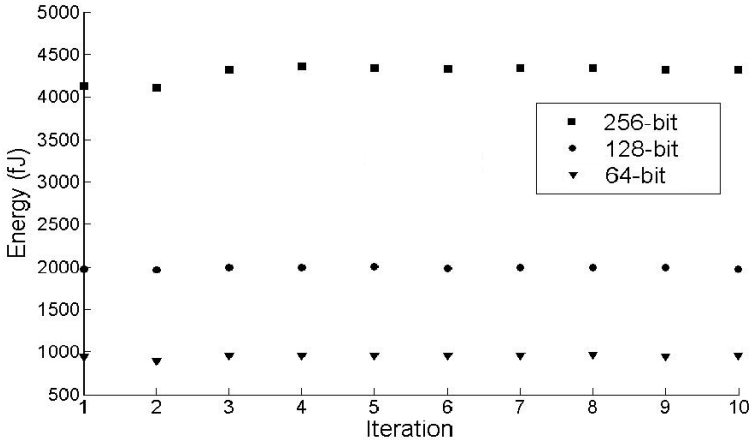

References: [4] and [3]

Units Impact on Side Channel Information (1/2)

Activity traces measured with CABA[1] simulations for three configurations of the multiplier (1,2,4 sub-blocks of 32 bits) and a very small accelerator

	1	2	4
ADD	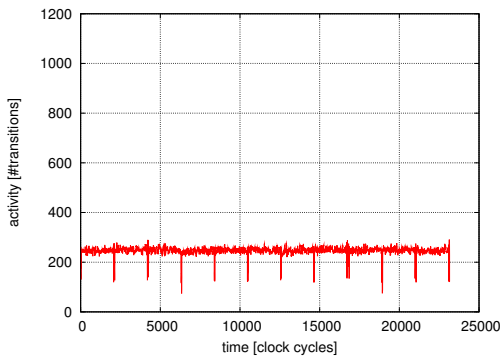	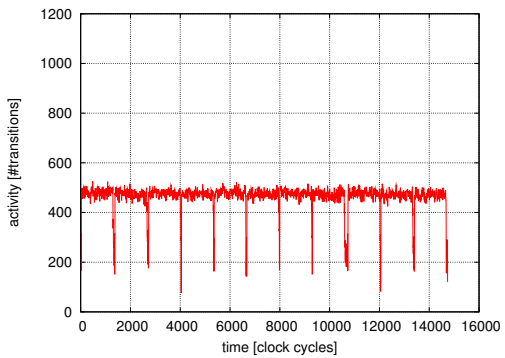	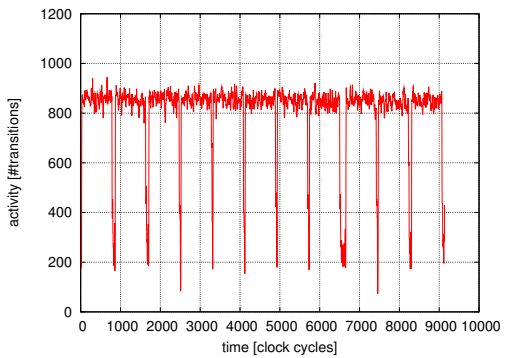
DBL	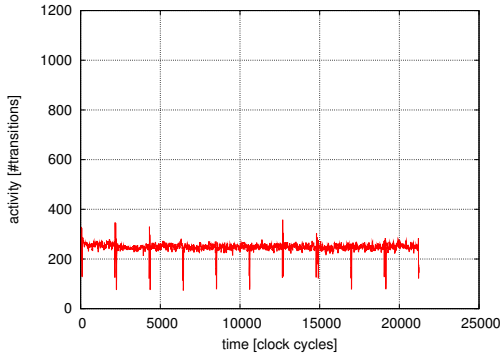	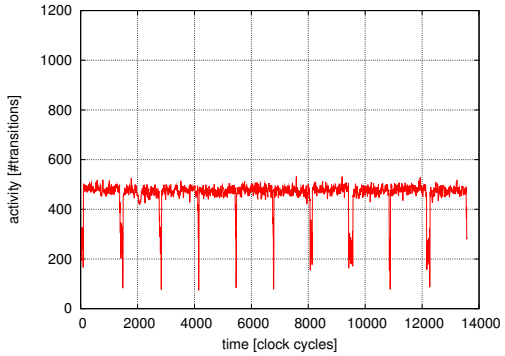	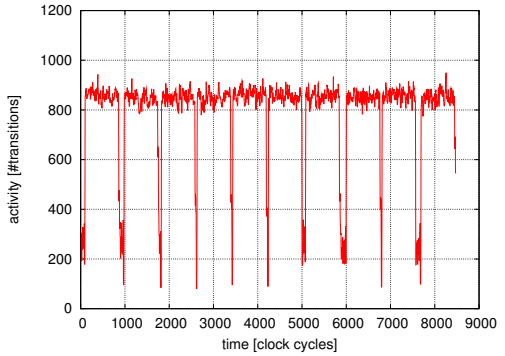

[1] Cycle Accurate Bit Accurate

Units Impact on Side Channel Information (2/2)

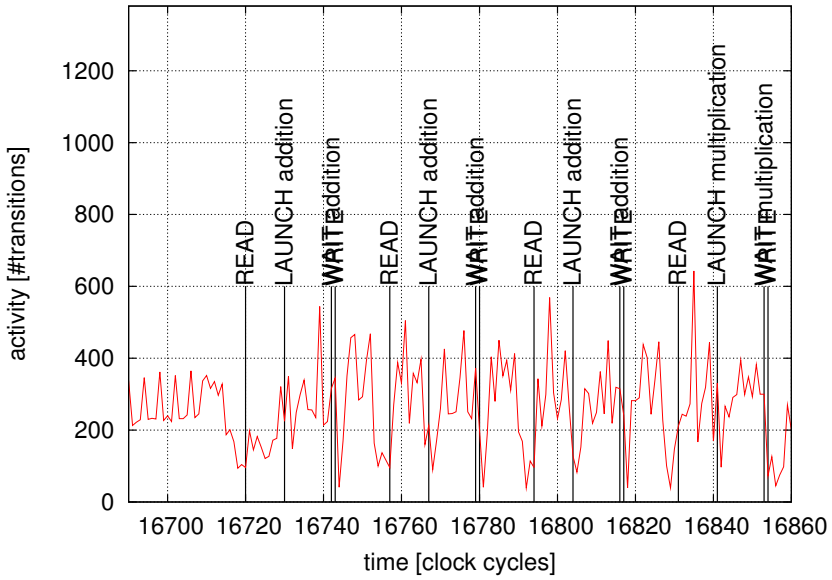

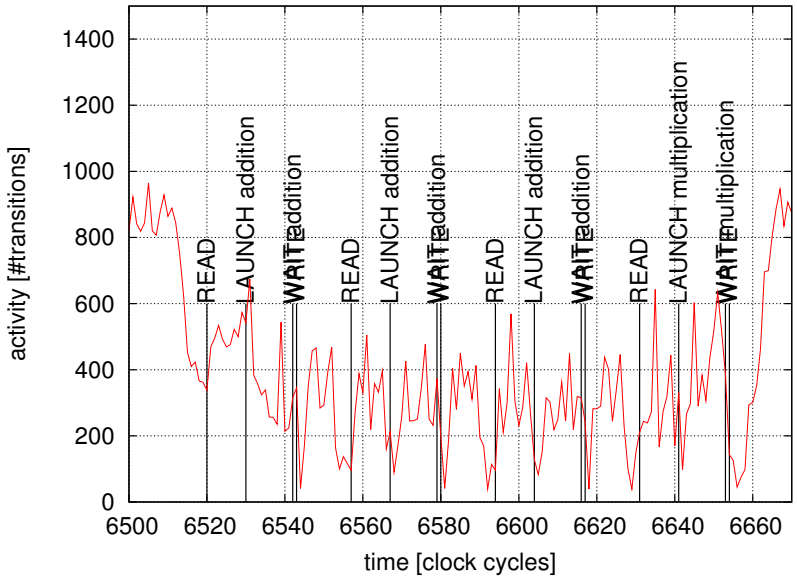

Developed Programming Tools

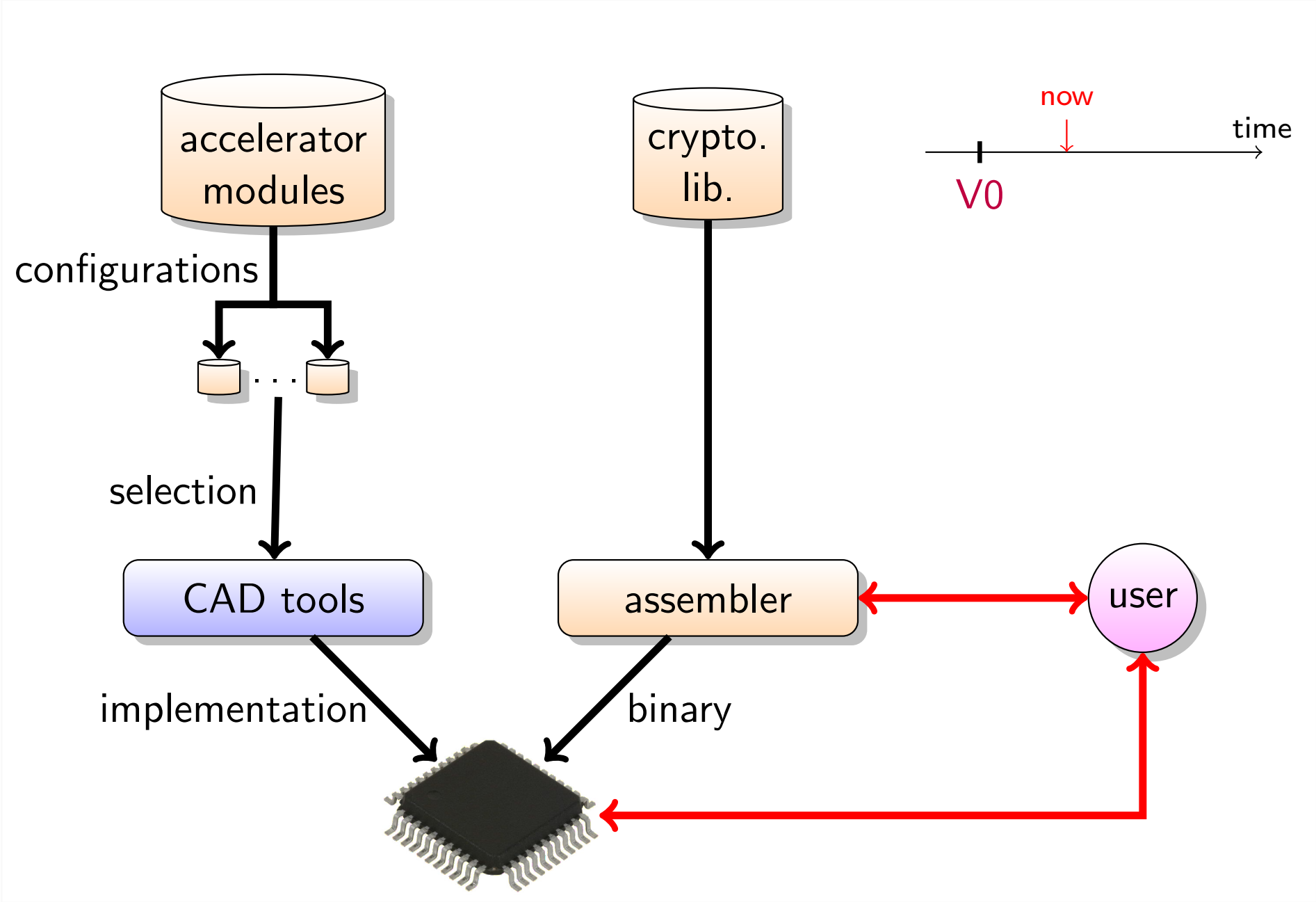

Developed Programming Tools

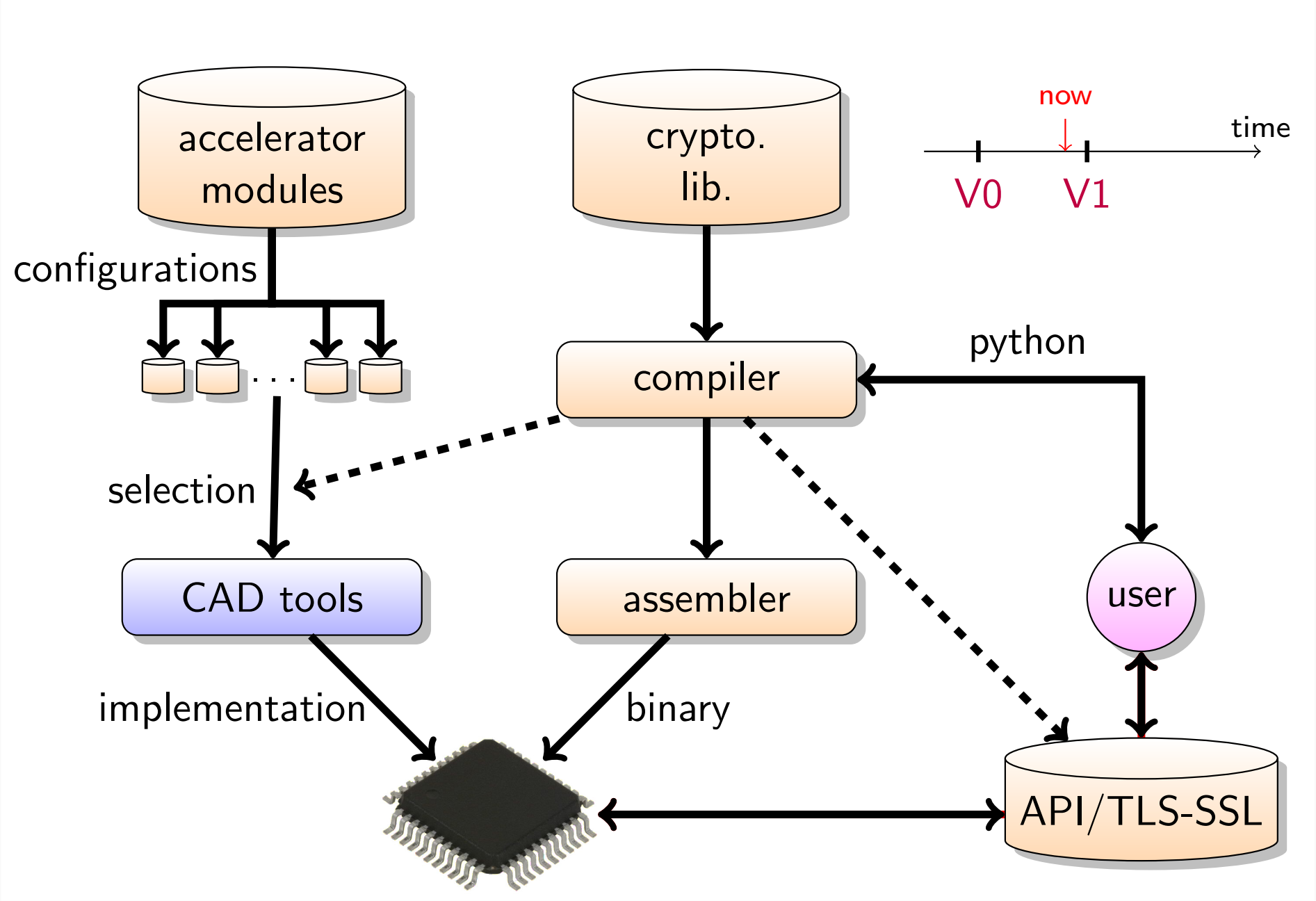

Developed Programming Tools

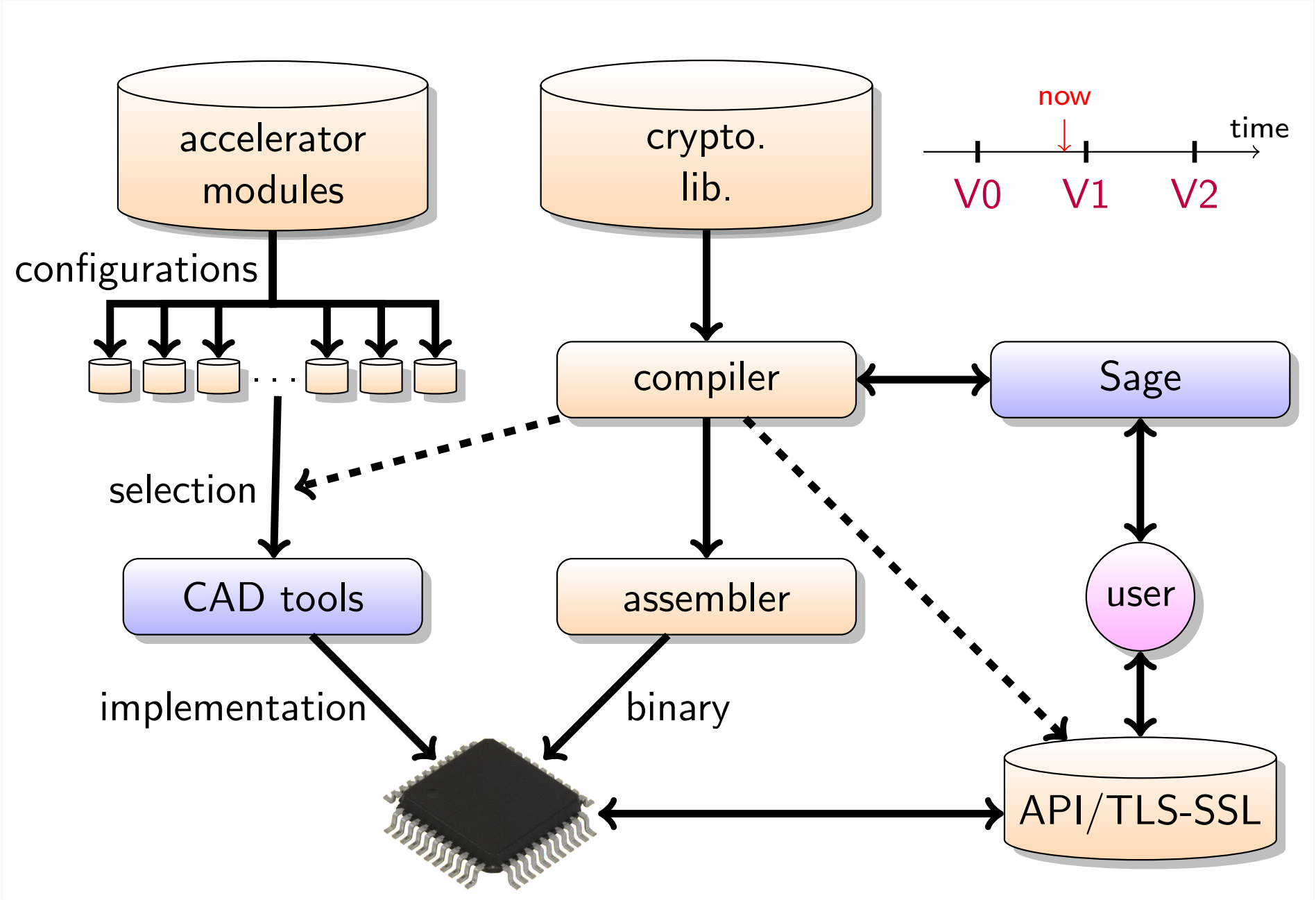

Instruction Set

READ	FUid	@Rid	@Rid	B/U
WRITE	FUid	@Rid		
LAUNCH	FUid	MODE		
WAIT	FUid			
SETADDR0	@Rid	OFFSET		
SETADDRN	@Rid	#WORD		
WRITEK	#WORD			
CALL	@DEST			
RET				
BZ	@DEST			
BNZ	@DEST			
JMP	@DEST			
CMPD	DIGIT			
SET	FLAGid			
TST	FLAGid			

Address Model in the Register File

RF requirements :

- 5–16 registers of m-bit $\mathbb{F}_q$ elements
- worst case: w small (16 bits) and m large (600 bits) $\Rightarrow$ 550+ words and 10-bit physical addresses

Address Model in the Register File

RF requirements :

- 5–16 registers of m-bit $\mathbb{F}_q$ elements
- worst case: w small (16 bits) and m large (600 bits) $\Rightarrow$ 550+ words and 10-bit physical addresses

$x \in \mathbb{F}_q$ is addressed by one entry (notation `@Rid`) of the intermediate address table (IAT) with 2 values:

- offset of the first word (e.g. $x[0]$)
- number of w-bit words

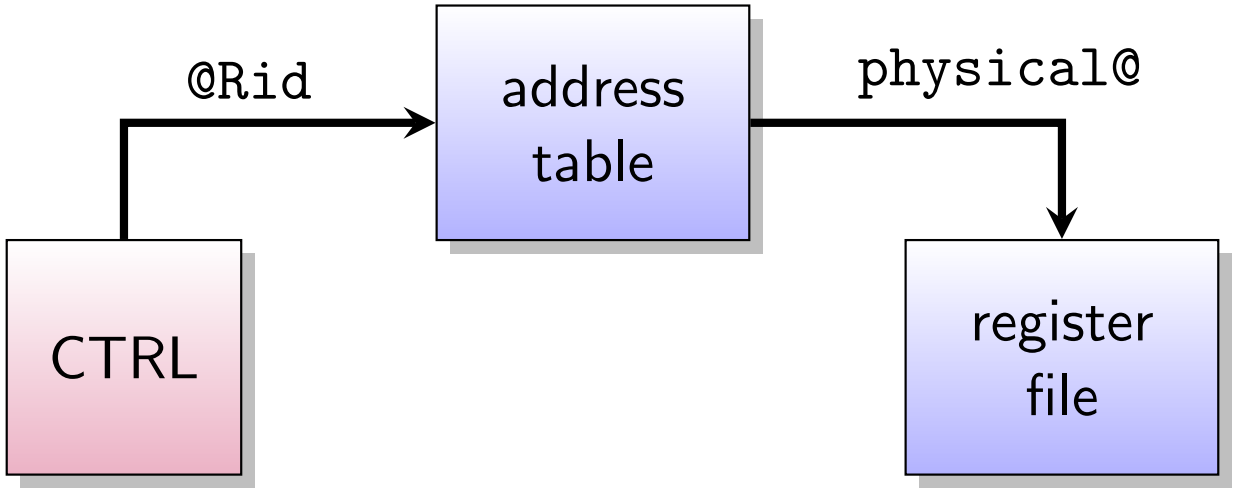

Code Memory

Behavior:

- Specific private path in the interconnect for code download (no leaks in RF or FUs)
- Code input can be disabled (ROM mode with code in the FPGA bitstream)
- Instruction `CALL`: push PC then jump to `@DEST`
- Instruction `RET`: jump to (pop) + 1

Memory mapping to be defined

Internal Parallelism Model

non-blocking instruction decoding (i.e. always do $PC \leftarrow PC + 1$ or $PC \leftarrow cst$) except for `WAIT` instruction

Example of operations sequence, its dependency graph and assembly code for 2 multipliers:

$r = ((a \times b) + c) + (d \times e))$

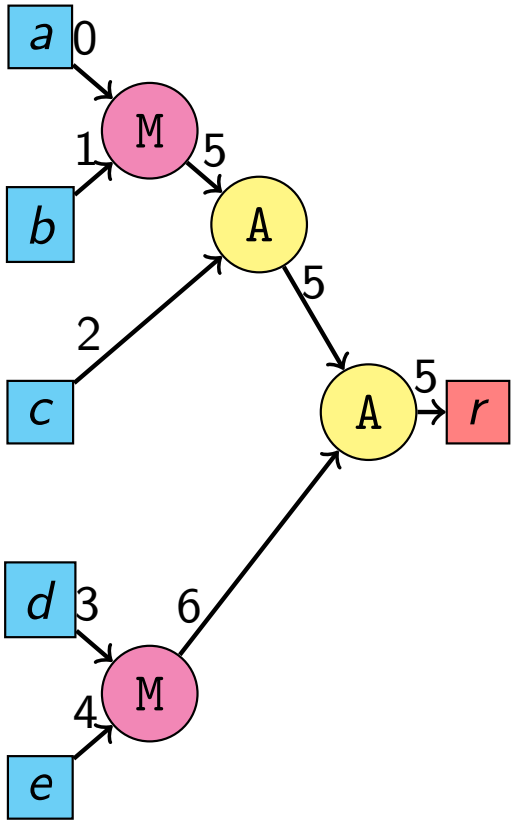

1	`read fu_mul_0, 0, 1`	read a & b
2	`launch fu_mul_0`	start ab
3	`read fu_mul_1, 3, 4`	lit d & e
4	`launch fu_mul_1`	start de
5	`wait fu_mul_0`	wait for ab
6	`write fu_mul_0, 5`	write ab
7	`set OPMODE, 0`	addition mode (+)
8	`read fu_add_sub_0, 5, 2`	read ab & c
9	`launch fu_add_sub_0`	start $(ab) + c$
10	`wait fu_mul_1`	wait for de
11	`write fu_mul_1, 6`	write de
12	`wait fu_add_sub_0`	wait for $(ab) + c$
13	`write fu_add_sub_0, 5`	write $(ab) + c$
14	`read fu_add_sub_0, 5, 6`	read $(ab) + c$ & de
15	`launch fu_add_sub_0`	start $((ab) + c) + (de)$
16	`wait fu_add_sub_0`	wait for $((ab) + c) + (de)$
17	`write fu_add_sub_0, 5`	write $((ab) + c) + (de)$

ECC Accelerator with Additions Chains

First full hardware implementation of recoding using additions chains

FPGA implementation

Spartan-6 XC6SLX9

192-bit $\mathbb{F}_p$

Very small config.

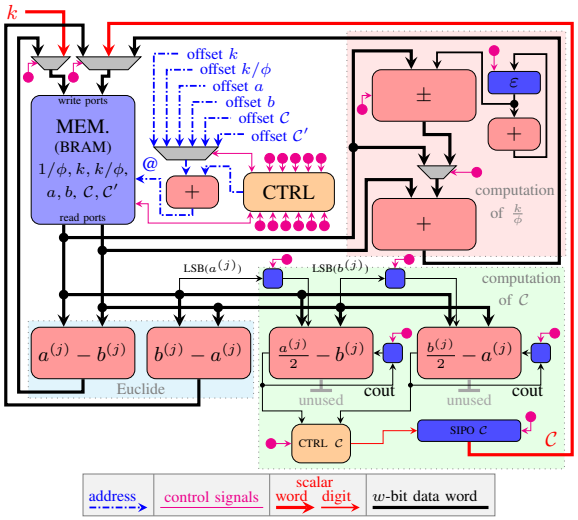

recoding method	BRAM	optim. target	area slices (FF/LUT)	freq. MHz	dura. ms	SCA prot.
EAC	3	area	534 (1813/1508)	132	35.8	Y
		speed	556 (1872/1523)	137	34.5	
DA	2	area	429 (1243/1134)	191	30	N
		speed	399 (1302/1222)	177	32.5	
ML	2	area	429 (1243/1134)	191	42.5	Y
		speed	399 (1302/1222)	177	45.8	
UF	2	area	429 (1243/1134)	191	50.4	Y
		speed	399 (1302/1222)	177	54.4	
NAF-3	2	area	422 (1280/1157)	181	25.2	N
		speed	423 (1321/1242)	175	26.1	
NAF-4	2	area	420 (1277/1161)	158	27.3	N
		speed	425 (1233/1246)	177	24.4	

EAC: Euclidean addition chains, DA: dbl-and-add, ML: Montgomery ladder, UF: unified formula

See details in [12]

Comparison ECC 256 vs HECC 128 (1/7)

	field $\mathbb{F}_p$	ADD	DBL
ECC	ℓ bits	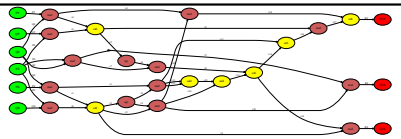 Cost: 12M + 2S	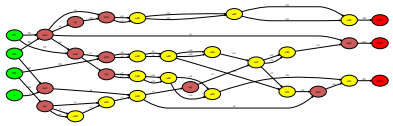 Cost: 6M + 5S
HECC	$\frac{\ell}{2}$ bits	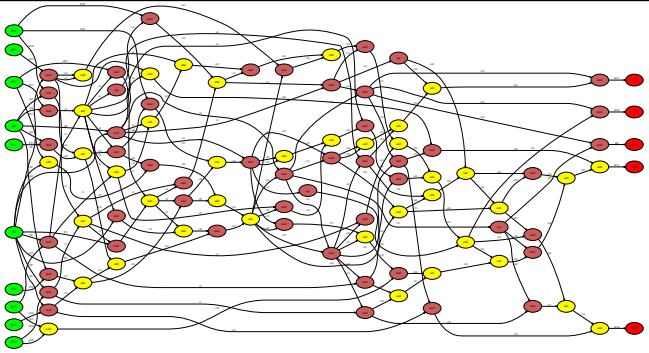 Cost: 47M + 4S	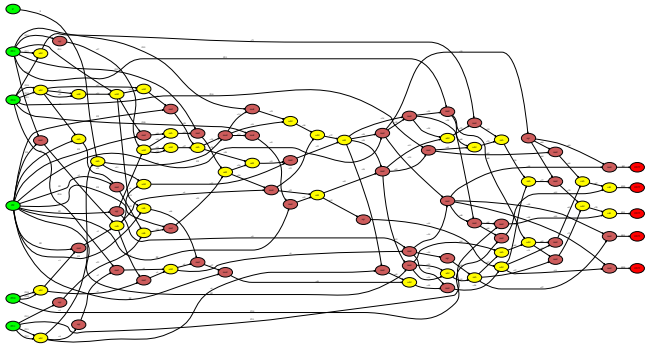 Cost: 38M + 6S

Configurations on a XC6SLX75 FPGA (details in [5]):

- $w = 32$ bits internal words
- 1 adder/subtracter, 1 inversion unit
- $n_{\mathtt{M}}$ multipliers (Montgomery) with $n_{\mathtt{B}}$ w-bit sub-blocks
- No DSP blocks
- ISE 14.6 Xilinx CAD tools, standard efforts (synthesis and P&R)

Comparison ECC 256 vs HECC 128 (2/7)

- Compared recoding techniques:
  - BIN: standard binary from left to right
  - NAF: non-adjacent form
  - λ-NAF: window methods with $\lambda \in \{3, 4\}$

- Implementation results for a full ECC accelerator ($n_{\mathtt{M}} = 1, n_{\mathtt{B}} = 1$):

Recoding	BIN	NAF	3-NAF	4-NAF
area slices (FF/LUT)	**565** (1321/1461)	**570** (1340/1479)	**571** (1344/1495)	**503** (1348/1489)
freq. (MHz)	225	228	237	217

All other results are reported for 4-NAF

Comparison ECC 256 vs HECC 128 (3/7)

Impact of the number/size of multipliers on the area and frequency:

	n_M	BRAM	$n_B = 1$		$n_B = 2$		$n_B = 4$	
			area slices (FF/LUT)	freq. MHz	area slices (FF/LUT)	freq. MHz	area slices (FF/LUT)	freq. MHz
ECC	1	3	547 (1374/1460)	231	573 (1476/1625)	233	673 (1674/1875)	233
	2	3	722 (1776/1903)	220	811 (1979/2210)	227	942 (2377/2701)	220
	3	3	810 (2174/2236)	221	915 (2480/2698)	215	1130 (3077/3430)	214
	4	3	952 (2569/2656)	215	1100 (2977/3282)	217	1512 (3771/4293)	216
	5	3	1064 (2982/3136)	210	1405 (3492/3902)	206	1722 (4487/5122)	209
HECC	1	4	514 (1336/1374)	235	549 (1434/1513)	234		
	2	4	646 (1716/1783)	220	737 (1912/2055)	234		
	3	4	732 (2092/2075)	224	826 (2386/2485)	225		
	4	4	870 (2476/2424)	218	1022 (2868/2987)	214		
	5	4	976 (2865/2773)	219	1115 (3355/3465)	210		
	6	4	1089 (3233/3092)	203	1240 (3821/3908)	208		
	7	4	1145 (3601/3426)	213	1372 (4287/4365)	205		
	8	4	1281 (3981/3809)	191	1552 (4765/4890)	183		
	9	4	1379 (4363/4051)	202	1691 (5245/5277)	199		
	10	4	1543 (4739/4435)	196	1856 (5719/5801)	198		
	11	4	1547 (5114/4750)	189	1936 (6192/6240)	198		
	12	4	1738 (5499/5128)	191	2100 (6675/6771)	188		

Comparison ECC 256 vs HECC 128 (4/7)

Impact of the number/size of multipliers on the average time (ms):

	n_B	n_M											
		1	2	3	4	5	6	7	8	9	10	11	12
HECC	1	15.6	8.6	5.7	4.7	3.9	3.7	3.3	3.6	3.4	3.5	3.6	3.6
	2	11.9	6.2	4.5	3.6	3.2	2.8	2.8	3.0	2.7	2.7	2.8	2.9
ECC	1	28.1	15.3	12.4	12.4	12.7							
	2	17.7	9.6	8.3	8.0	8.4							
	4	11.1	6.2	5.4	5.1	5.3							

Standard deviation for 1000 $[k]P$:

configuration	ECC (1,1)	ECC (3,4)	HECC (1,1)	HECC (6,2)
average time [ms]	28.1	5.4	15.6	2.8
standard deviation [ms]	0.289	0.056	0.324	0.045

Comparison ECC 256 vs HECC 128 (5/7)

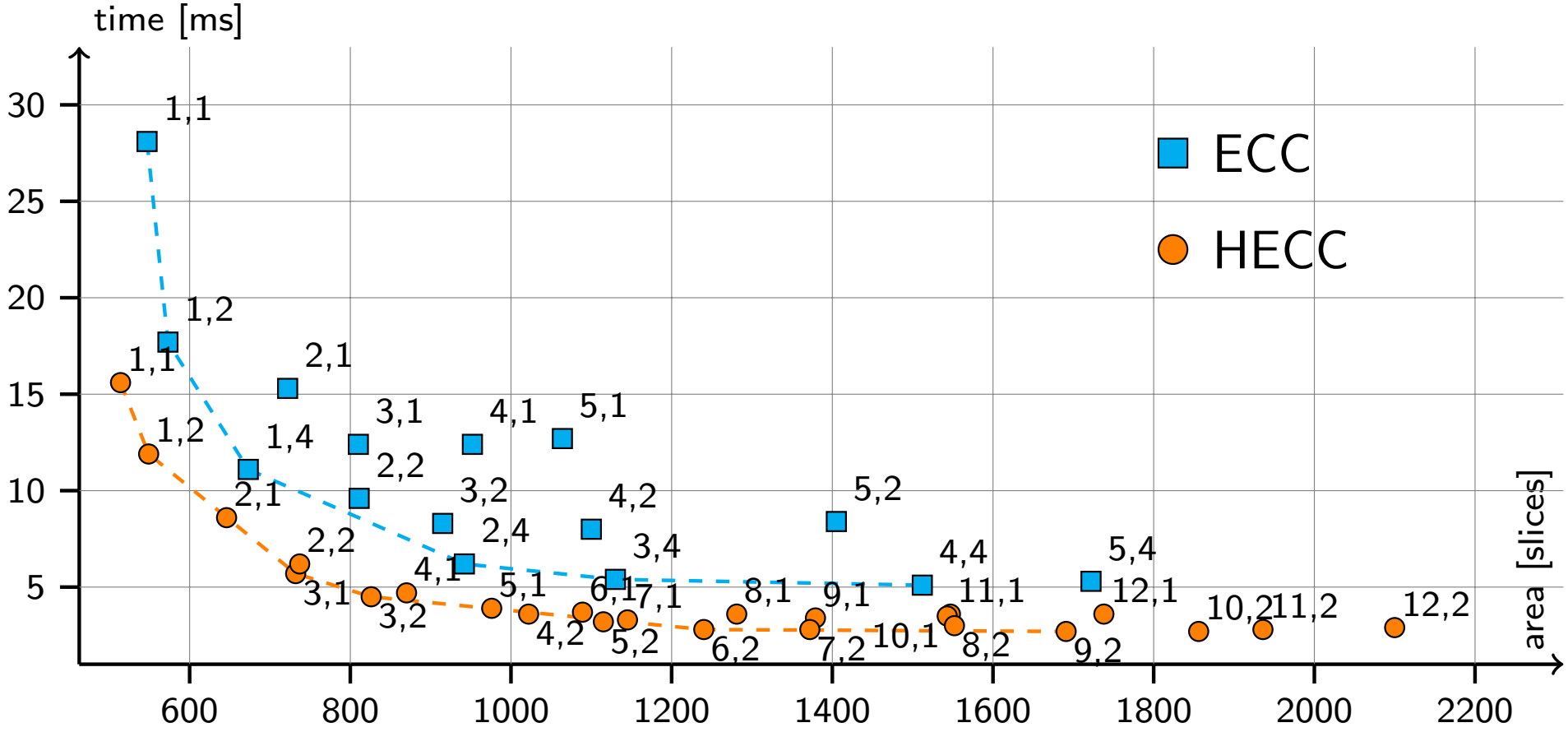

On average HECC is 40 % faster than ECC for a similar silicon cost

Comparison ECC 256 vs HECC 128 (6/7)

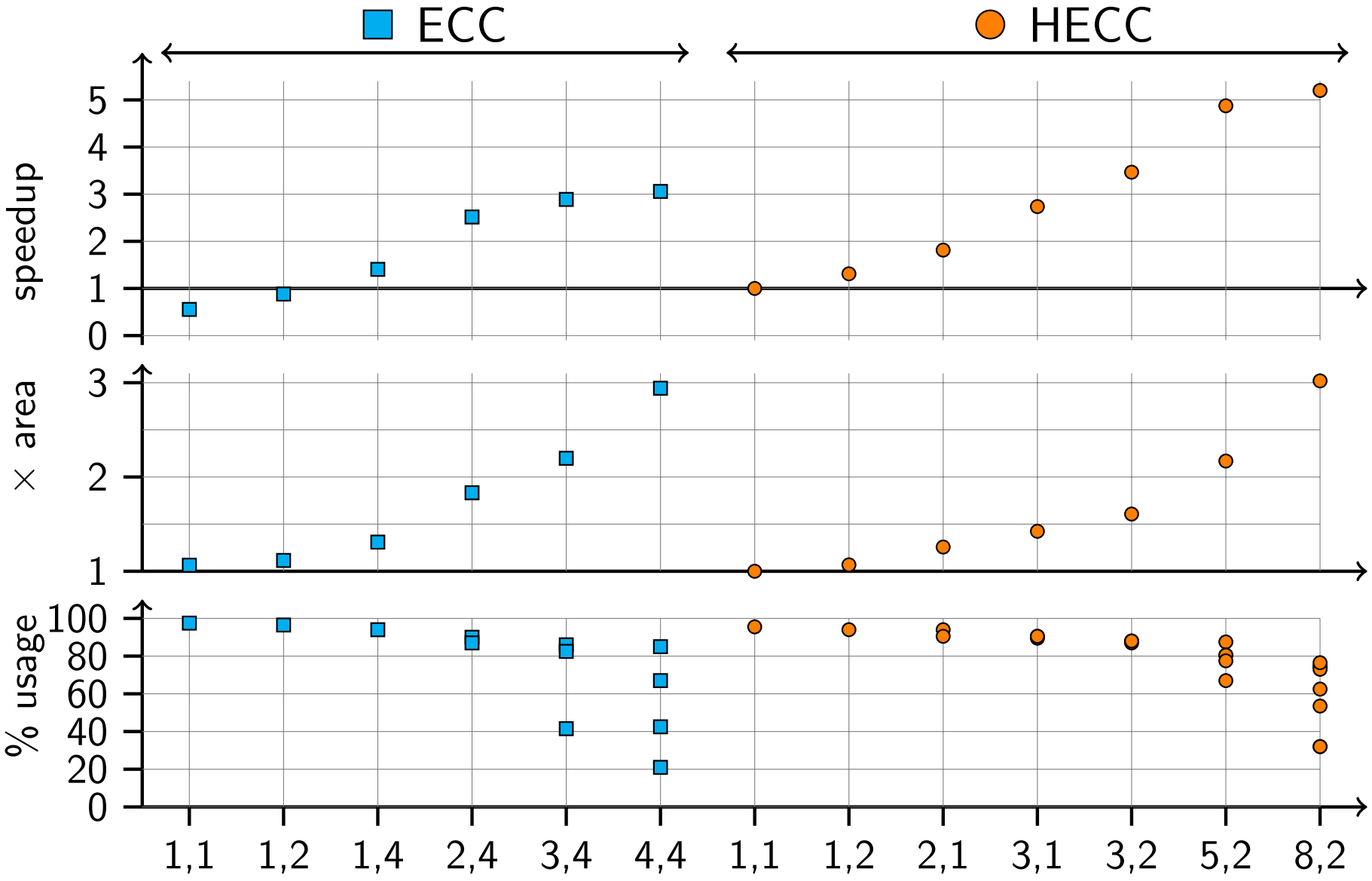

Comparison ECC 256 vs HECC 128 (7/7)

Source	FPGA	area slices / DSP blocks	freq. MHz	duration $[k]\mathbf{P}$ ms
ECC 1,2	Spartan 6	573 / 0	233	17.7
ECC 1,4		673 / 0	233	11.1
ECC 2,4		942 / 0	220	6.2
ECC 3,4		1 130 / 0	214	5.4
[7]	Virtex-5	1 725 / 37	291	0.38
	Virtex-4	4 655 / 37	250	0.44
[6]	Virtex-4	13 661 / 0	43	9.2
		20 123 / 0	43	7.7

Conclusion & Current/Future Works

- HECC is efficient in hardware (40 % speedup vs ECC)
- Flexible architecture and tools for research activities
- Advanced recoding schemes are efficient in hardware

Current/future works:

- Hardware implementation of halving based method(s)
- Protections against fault injection
- HECC extensions of the accelerator (and tools)
- ASIC (CMOS 65nm) implementation of the accelerator
- Side channel evaluation of (some) proposed protections
- HW/SW Code distribution under free license
- More advanced architecture/circuit level protections
- Collaboration with other research groups

Our Long Term Objectives

Study the links between:

- curves
- arithmetic algorithms
- $\mathbb{F}_q$, pts representations
- architecture & units
- circuit styles

to ensure

- high security against
  - theoretical attacks
  - physical attacks
- low design cost
- low silicon cost
- low energy(/power)
- high performances
- high flexibility

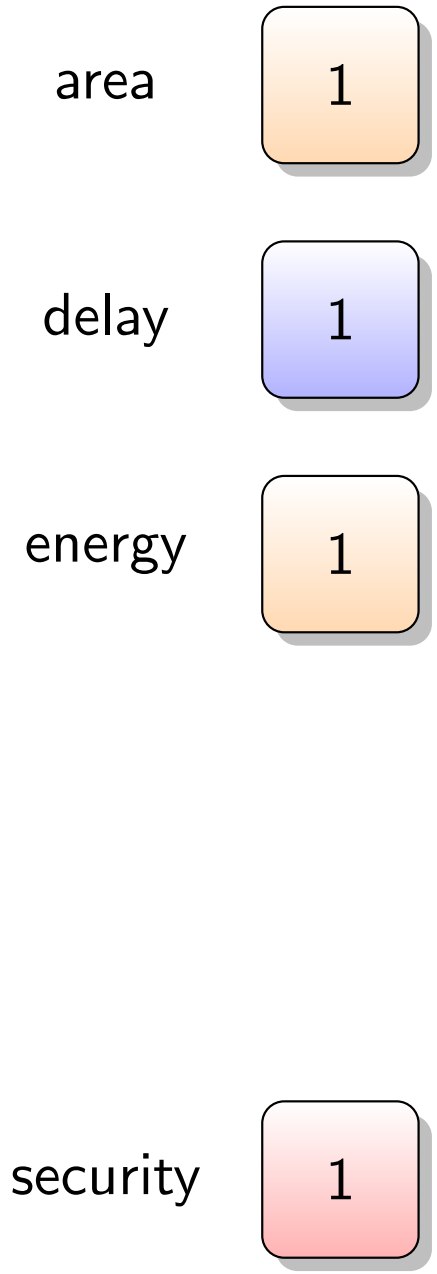

Our Long Term Objectives

Study the links between:

- curves
- arithmetic algorithms
- $\mathbb{F}_q$, pts representations
- architecture & units
- circuit styles

to ensure

- high security against
  - theoretical attacks
  - physical attacks
- low design cost
- low silicon cost
- low energy(/power)
- high performances
- high flexibility

area $1 \longrightarrow 1 + a$

delay $1 \longrightarrow 1 + t$

energy $1 \longrightarrow 1 + e$

$a, t, e \in 0\%, 5\%, 10\%, \ldots, 100\%$

security 1

Our Long Term Objectives

Study the links between:

- curves
- arithmetic algorithms
- $\mathbb{F}_q$, pts representations
- architecture & units
- circuit styles

to ensure

- high security against
  - theoretical attacks
  - physical attacks
- low design cost
- low silicon cost
- low energy(/power)
- high performances
- high flexibility

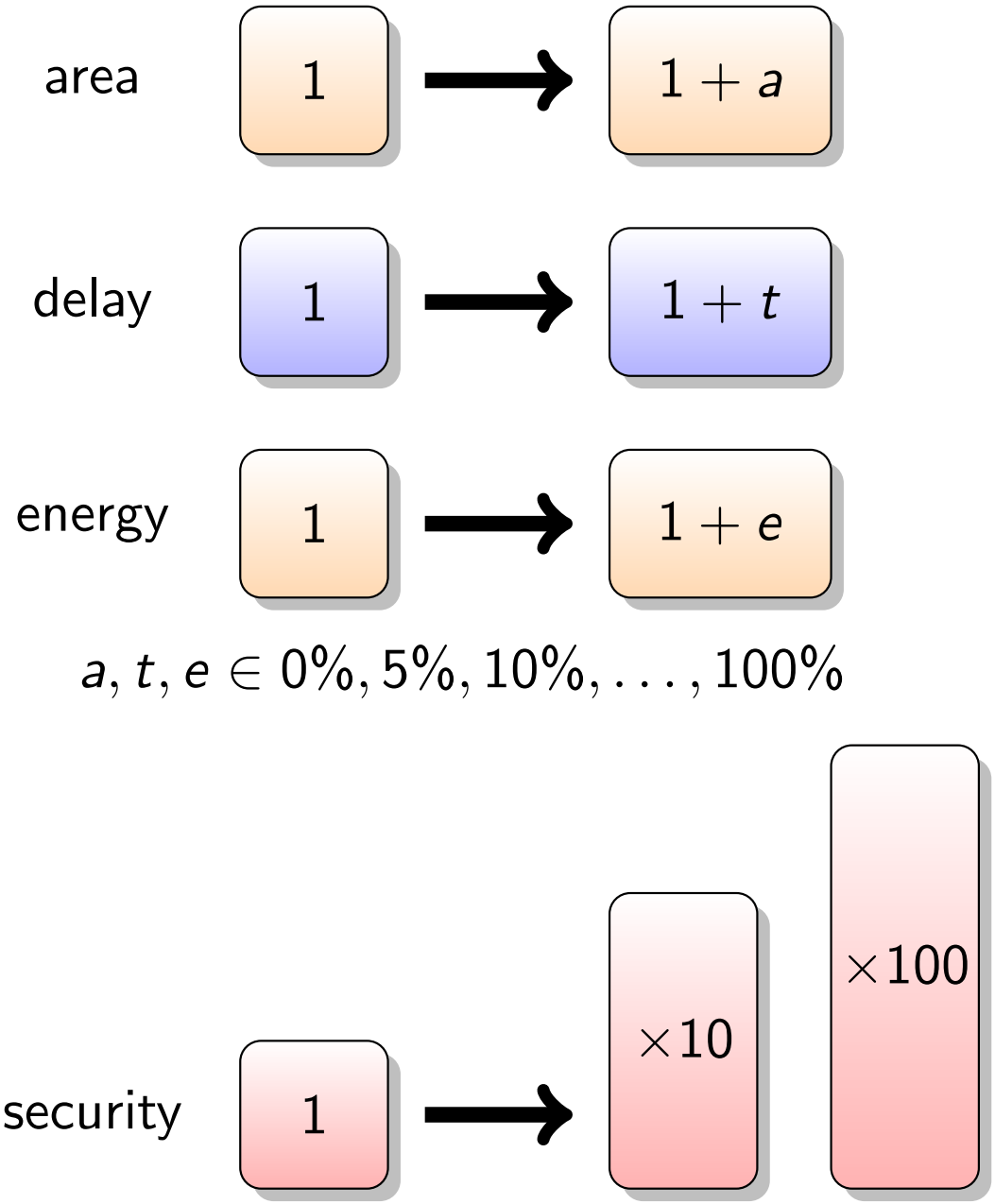

References I

T. Chabrier, D. Pamula, and A. Tisserand.
Hardware implementation of DBNS recoding for ECC processor.
In *Proc. 44rd Asilomar Conference on Signals, Systems and Computers*, pages 1129–1133, Pacific Grove, California, U.S.A., November 2010. IEEE.

T. Chabrier and A. Tisserand.
On-the-fly multi-base recoding for ECC scalar multiplication without pre-computations.
In A. Nannarelli, P.-M. Seidel, and P. T. P. Tang, editors, *Proc. 21st Symposium on Computer Arithmetic (ARITH)*, pages 219–228, Austin, TX, U.S.A, April 2013. IEEE Computer Society.

J. Chen, A. Tisserand, E. Popovici, and S. Cotofana.
Asynchronous charge sharing power consistent montgomery multiplier.
In J. Sparso and E Yahya, editors, *Proc. 21st IEEE International Symposium on Asynchronous Circuits and Systems (ASYNC)*, pages 132–138, Mountain View, California, USA, May 2015.

J. Chen, A. Tisserand, E. M. Popovici, and S. Cotofana.
Robust sub-powered asynchronous logic.
In J. Becker and M. R. Adrover, editors, *Proc. 24th International Workshop on Power and Timing Modeling, Optimization and Simulation (PATMOS)*, pages 1–7, Palma de Mallorca, Spain, September 2014. IEEE.

G. Gallin, A. Tisserand, and N. Veyrat-Charvillon.
Comparaison expérimentale d'architectures de crypto-processeurs pour courbes elliptiques et hyper-elliptiques.
In *Actes Conférence d'informatique en Parallélisme, Architecture et Système (ComPAS)*, Lille, France, June 2015.
Prix meilleur papier track architecture.

S. Ghosh, M. Alam, D. Roychowdhury, and I.S. Gupta.
Parallel crypto-devices for GF(p) elliptic curve multiplication resistant against side channel attacks.
Computers and Electrical Engineering, 35(2):329–338, March 2009.

References II

Y. Ma, Z. Liu, W. Pan, and J. Jing.
A high-speed elliptic curve cryptographic processor for generic curves over GF(p).
In *Proc. 20th International Workshop on Selected Areas in Cryptography (SAC)*, volume 8282 of *LNCS*, pages 421–437, Burnaby, BC, Canada, August 2013. Springer.

D. Pamula.
Arithmetic Operators on GF(2^m) for Cryptographic Applications: Performance - Power Consumption - Security Tradeoffs.
Phd thesis, University of Rennes 1 and Silesian University of Technology, December 2012.

D. Pamula, E. Hrynkiewicz, and A. Tisserand.
Analysis of GF(2^{233}) multipliers regarding elliptic curve cryptosystem applications.
In *11th IFAC/IEEE International Conference on Programmable Devices and Embedded Systems (PDeS)*, pages 252–257, Brno, Czech Republic, May 2012.

D. Pamula and A. Tisserand.
GF(2^m) finite-field multipliers with reduced activity variations.
In *4th International Workshop on the Arithmetic of Finite Fields*, volume 7369 of *LNCS*, pages 152–167, Bochum, Germany, July 2012. Springer.

D. Pamula and A. Tisserand.
Fast and secure finite field multipliers.
In *Proc. Euromicro Conference on Digital System Design (DSD)*, pages 1–8, Funchal, Portugal, August 2015.

J. Proy, N. Veyrat-Charvillon, A. Tisserand, and N. Meloni.
Full hardware implementation of short addition chains recoding for ECC scalar multiplication.
In *Actes Conférence d'informatique en Parallélisme, Architecture et Système (ComPAS)*, Lille, France, June 2015.

The end, questions ?

Contact:

- mailto:arnaud.tisserand@irisa.fr
- http://people.irisa.fr/Arnaud.Tisserand/
- CAIRN Group http://www.irisa.fr/cairn/
- IRISA Laboratory, CNRS–INRIA–Univ. Rennes 1
  6 rue Kerampont, CS 80518, F-22305 Lannion cedex, France

Thank you