HAL
open science

# Equilibria and stability analysis of a branched metabolic network with feedback inhibition

Frédéric Grognard, Yacine Chitour, Georges Bastin

## To cite this version:

Frédéric Grognard, Yacine Chitour, Georges Bastin. Equilibria and stability analysis of a branched metabolic network with feedback inhibition. 9th International Symposium on Computer Applications in Biotechnology, Mar 2004, Nancy, France. hal-01091728

**HAL Id: hal-01091728**

**https://inria.hal.science/hal-01091728v1**

Submitted on 5 Dec 2014

**HAL** is a multi-disciplinary open access archive for the deposit and dissemination of scientific research documents, whether they are published or not. The documents may come from teaching and research institutions in France or abroad, or from public or private research centers.

L'archive ouverte pluridisciplinaire **HAL**, est destinée au dépôt et à la diffusion de documents scientifiques de niveau recherche, publiés ou non, émanant des établissements d'enseignement et de recherche français ou étrangers, des laboratoires publics ou privés.

# EQUILIBRIA AND STABILITY ANALYSIS OF A BRANCHED METABOLIC NETWORK WITH FEEDBACK INHIBITION

**F. Grognard** * **Y. Chitour** ** **G. Bastin** ***

* *Projet COMORE. INRIA Sophia-Antipolis.*
*BP 93 06902 Sophia-Antipolis Cedex, France*
*Email : Frederic.Grognard@inria.fr*
** *Département de Mathématiques Université de Paris Sud*
*Bâtiment 425. 91405 Orsay, France*
*Email : Yacine.Chitour@math.u-psud.fr*
*** *CESAME Université Catholique de Louvain*
*Bâtiment Euler,4-6, avenue G.Lemaitre,*
*1348 Louvain la Neuve, Belgium*
*Email : bastin@auto.ucl.ac.be*

Abstract: This paper deals with the analysis of a metabolic network with feedback inhibition. The considered system is an acyclic network of mono-molecular enzymatic reactions in which metabolites can act as feedback regulators on "preceding" enzymes of their own pathway, and in which one metabolite is the root of the whole network. We show, under mild assumptions, the uniqueness of the equilibrium. In the simplified case where inhibition only acts on the reactions having the root of the network as substrate, we show that the equilibrium is globally attractive. This requires that we impose conditions on the kinetic parameters of the metabolic reactions.

Keywords: Metabolic network, small gain, stability, limit cycle

## 1. INTRODUCTION

The cellular metabolism is defined as the (huge) set of biochemical reactions that occur inside a living cell for growth and reproduction. It is usually represented by an intricate network connecting the involved biochemical species (called "metabolites"). The pathways of the network are called "metabolic pathways". In the metabolic engineering literature, it is widely accepted that "despite their immense complexity, metabolic systems are characterized by their ability to reach stable steady states" (quoted from Stephanopoulos, Aristidou & Nielsen (1997), Chapter 4). It should however be fair to recognize that a mathematical analysis of this fundamental stability property is a difficult question which was not much investigated. We shall limit ourselves to simple metabolic pathways which are made up of sequences of mono-molecular enzyme-catalysed reactions in the form $X_s \rightarrow X_p$.

Those reactions can be inhibited by the presence of other metabolites in the network. Without this inhibition, the stability analysis is straightforward; we will then concentrate on networks with inhibition, like the one given by the aspartate amino-acid pathways (Umbarger, 1978), see Figure 1. In this network, each produced amino-acid inhibits an enzyme of its own pathway. This action can be seen as a negative feedback, that regulates the behavior of the network. Indeed, if we, for example, consider a large excess of isoleucine ($X_{20}$), the reaction $X_{16} \longrightarrow X_{17}$ is shut down, so that the concentration of isoleucine is progressively reduced.

In Section 2, a model of metabolic networks such as the one of Figure 1 will be presented. The equilibria of these models will then be studied in Section 3, followed by a stability analysis in Section 4, where global attractivity of a single equilibrium is shown.

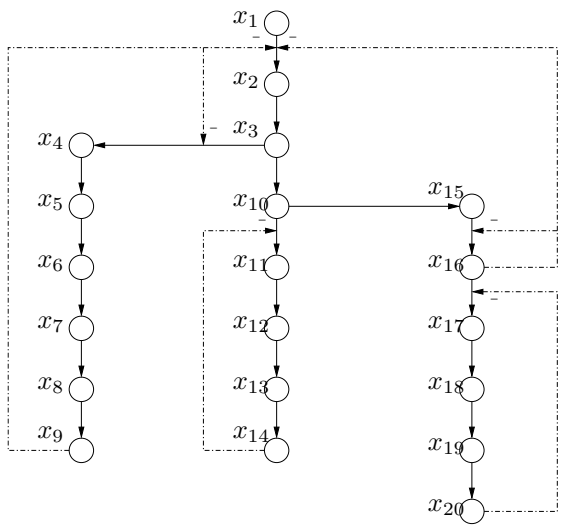


Fig. 1. Metabolic network representing the aspartate amino-acid pathways: the solid lines represent the reactions and the dash-dotted lines the inhibition produced by the state at the start of the arrow onto the reaction that lies at the end of the arrow. The root of the metabolic pathway is $x_1$ (aspartate), and the products are the corresponding amino acids: lysine ($x_9$), methionine ($x_{14}$), threonine($x_{16}$), and isoleucine ($x_{20}$).

The non-genericity of the stability of the equilibrium is then illustrated in Section 5.

## 2. MODEL OF A METABOLIC NETWORK

In our model of a metabolic network made of enzyme-catalysed reactions in the form $X_s \rightarrow X_p$ which are inhibited by other metabolites of the network, we will denote the inhibition factor by $x^{[p]}$, a $n_p$ dimensional vector containing the molar fractions of all the metabolites inhibiting the reaction $X_s \rightarrow X_p$. This reaction is characterized by a velocity $\varphi_{sp}(x_s, x^{[p]})$.

On the other hand, some metabolites of the considered network are used in stages of the metabolism that are not modeled in the considered network. Therefore, we must include consumption terms in the model for those reactions in the form $X_s \rightarrow$ ... We will generically denote those terms $\varphi_{s0}(x_s)$.

We impose that these reaction velocities satisfy the following assumption:

**Assumption** *1.*
- For all $s, p$ such that the reaction $X_s \rightarrow X_p$ belongs to the metabolic network, the function

$$\varphi_{sp}(x_s, x^{[p]})$$

satisfies $\varphi_{sp}(0) = 0$, is non-decreasing in $x_s$ for $x_s \geq 0$ and non-increasing in $x_j^{[p]}$. Note that this must also be valid when the value of $p$ is 0.

In order to define the class of metabolic networks that we consider, we need the following definition from graph theory:

**Definition** *1.* A directed graph is called an *arborescence* if, from a given node $x$, known as the root node, there is exactly one elementary path from this node to any other node $y$.

The metabolic networks that we consider in this paper then satisfy the following assumption

**Assumption** *2.*
- the involved species are denoted $X_1, X_2, \cdots, X_n$
- the graphic representation of the network (with the different metabolites as nodes and the different reactions as oriented edges) is an arborescence with $X_1$ as root
- the inhibition acting on a reaction $X_s \rightarrow X_p$ only results from the action of metabolites from the (sub)-arborescence rooted in $X_p$

Stemming from the definition and known properties of arborescences, Assumption 2 has the following consequence on the class of metabolic network that we consider:

**(i)** Each metabolite is produced by a single other metabolite;
**(ii)** There is no cycle of reactions;

With these definitions and notations, we shall now define a mass-balance dynamical model in the form

$$\dot{x} = \Phi(x) - \mu x + c e_1$$

where $x = (x_1, \cdots, x_n)^T \in I\!R^n$, and $x_i$ denotes the molar fraction of the metabolite $X_i$ inside the cell. The factor $\mu \geq 0$ represents the specific growth rate of the cell: we assume that the cell metabolism is analyzed during a period of exponential cell growth with a constant specific growth rate $\mu$. The vector $e_1 = (1, 0, \cdots, 0)^T$ and the scalar $c$ denote the constant supply rate of the metabolite $X_1$ at the root of the network. The function $\Phi$ includes all the reaction velocities, whether they correspond to reactions inside the network or reactions consuming the metabolites of the network for use in subsequent stages of the metabolism.

In order to specify $\Phi(x)$, we introduce the following notations:

**Notation** *1.*
- $\mathcal{P}(j) = \{k|$ the reaction $X_j \rightarrow X_k$ belongs to the network $\}$. $\mathcal{P}(j)$ defines the set of all metabolites that are produced by reactions having $X_j$ as substrate. If there is a consumption term in the form $\varphi_{j0}(x_j)$ in the derivative of $x_j$, the index 0 is included in $\mathcal{P}(j)$.
- $\mathcal{A}(j) = \{k|X_k$ belongs to the arborescence with its root in $X_j\}$. "0" is not included in $\mathcal{A}(j)$.

It can easily be seen that $\mathcal{P}(j) \setminus \{0\}$ is a subsets of $\mathcal{A}(j)$ under Assumption 2.

From the arborescence structure, it is clear that we can separate the metabolites into three different families:

- the root $X_1$: we suppose that there is a constant supply rate $c$ of $X_1$ so that the corresponding mass-balance equation is the following:

$$\dot{x}_1 = c - \sum_{k \in \mathcal{P}(1)} \varphi_{1k}(x_1, x^{[k]}) - \mu x_1 \qquad (1)$$

- the intermediate metabolite $X_j$, which is the result of the reaction $X_i \to X_j$:

$$\dot{x}_j = \varphi_{ij}(x_i, x^{[j]}) - \sum_{k \in \mathcal{P}(j)} \varphi_{jk}(x_j, x^{[k]}) - \mu x_j \qquad (2)$$

- the boundary metabolite $X_j$ (such that $\mathcal{P}(j) = \{0\}$), which is the product of a reaction $X_i \to X_j$:

$$\dot{x}_j = \varphi_{ij}(x_i, x^{[j]}) - \varphi_{j0}(x_j) - \mu x_j \qquad (3)$$

  Under Assumption 2, we can only have $x^{[j]} = x_j$ or $x^{[j]} = \emptyset$.

A particular case of this network is the metabolic chain with *sequential feedback inhibition* (cf. Chitour, Grognard & Bastin (2003))

$$X_1 \to X_2 \to \cdots \to X_n.$$

with the last metabolite $X_n$ acting as an inhibitor of the first reaction $X_1 \longrightarrow X_2$. In this case, all $x^{[j]}$ are empty, except $x^{[2]} = x_n$.

## 3. EQUILIBRIUM OF A METABOLIC NETWORK

Based on equations (1)-(2)-(3), we can now compute the mass-balance of the whole arborescence:

$$\frac{d}{dt}(\sum_{l=1}^{n} x_l) = c - \mu \sum_{l=1}^{n} x_l - \sum_{\{k|0 \in \mathcal{P}(k)\}} \varphi_{k0}(x_k) \qquad (4)$$

and of the arborescence that has its root in $X_j$

$$\frac{d}{dt}(\sum_{l \in \mathcal{A}(j)} x_l) = \varphi_{ij}(x_i, x^{[j]}) - \mu \sum_{l \in \mathcal{A}(j)} x_l - \sum_{\{k|0 \in \mathcal{P}(k) \text{ and } k \in \mathcal{A}(j)\}} \varphi_{k0}(x_k) \qquad (5)$$

Those expressions will be critical in the proof of the following proposition:

*Proposition 1.* If Assumptions 1 and 2 are satisfied, then:

**(A)** the system (1)-(2)-(3) is positive;

**(B)** if all $\varphi_{s,p}(x_s, x^{[p]})$ (where $p$ can be 0) are increasing in $x_s$ then there is at most one equilibrium $\bar{x} = (\bar{x}_1, \cdots, \bar{x}_n)$ of (1)-(2)-(3) in $I\!R^n_+$;

**(C)** if $\mu > 0$, then system (1)-(2)-(3) has a unique equilibrium $\bar{x} = (\bar{x}_1, \cdots, \bar{x}_n)$ in $I\!R^n_+$. Moreover, the solutions of (1)-(2)-(3) are bounded for any initial condition in $I\!R^n_+$.

**Proof:** (A) is easily seen by considering the system on the boundaries of the positive orthant.

The proofs of (B) and (C) are very similar. We write the proof for (B) and highlight the differences that arise for the proof of (C) .

We will first consider system (2)-(3) with $x_1 = \bar{x}_1$ as constant input. For any value of $\bar{x}_1$, we will denote by $(\bar{x}_2, \cdots, \bar{x}_n)$ the equilibrium of (2)-(3); this equilibrium is a function of $\bar{x}_1$, so that we will state that it is $(\bar{x}_2, \cdots, \bar{x}_n)(\bar{x}_1)$. We will now show, by induction, that every element $\bar{x}_i$ is an increasing function of $\bar{x}_1$ (resp. non-decreasing in case (C)).

The initial step of the proof considers the equilibrium of (3) with $x_i = \bar{x}_i$ as constant input

$$\varphi_{ij}(\bar{x}_i, \bar{x}^{[j]}) - \varphi_{j0}(\bar{x}_j) - \mu \bar{x}_j = 0$$

where $\bar{x}^{[j]} = \bar{x}_j$ or $x^{[j]} = \emptyset$. When $\bar{x}_i = 0$, $\bar{x}_j = 0$ is the only solution. Also, the left-hand side of this equation is an increasing function of $\bar{x}_i$ (resp. non-decreasing in case (C)) and a decreasing function of $\bar{x}_j$. It is then easily seen that, if we increase $\bar{x}_i$, $\bar{x}_j$ needs also to be increased (resp.increased or kept constant) to keep this equality satisfied. We then have that, in this case, $\bar{x}_j(\bar{x}_i)$ is an increasing function such that $\bar{x}_j(0) = 0$ (resp. non-decreasing function such that $\bar{x}_j(0) = 0$). When $\mu = 0$ (which can only happen in case (B)), the definition of $\bar{x}_j$ could be limited to an interval $[0, \bar{x}_i^m)$.

Let us now make the following induction hypothesis: for a given $j$, the functions $\bar{x}_k(\bar{x}_j)$ are increasing (resp. non-decreasing) functions for all $k \in \mathcal{A}(j)$ with $\bar{x}_k(0) = 0$. We then study the equilibrium of the mass-balance of the arborescence that has its root in $X_j$. From (5):

$$\varphi_{ij}(\bar{x}_i, \bar{x}^{[j]}(\bar{x}_j)) - \mu \sum_{l \in \mathcal{A}(j)} \bar{x}_l(\bar{x}_j) - \sum_{\{k|0 \in \mathcal{P}(k) \text{ and } k \in \mathcal{A}(j)\}} \varphi_{k0}(\bar{x}_k(\bar{x}_j)) = 0$$

With a similar argument to that of the initial step, we see that $\bar{x}_j$ is an increasing (resp. non-decreasing) function of $\bar{x}_i$ and that $\bar{x}_j(0) = 0$. The same can be said for all $\bar{x}_k$ with $k \in \mathcal{A}_j$ because they are already increasing (resp. non-decreasing) functions of $x_j$.

By induction, we then have that every $\bar{x}_k(\bar{x}_1)$ is an increasing function of $\bar{x}_1$ defined on the interval $[0, \bar{x}_1^m)$ (resp. non decreasing function defined for all $\bar{x}_1$). An equilibrium of the whole system then has to satisfy the equilibrium of the total mass-balance. From (4), this comes to:

$$\mu \sum_{l=1}^{n} \bar{x}_l(\bar{x}_1) + \sum_{\{k|0 \in \mathcal{P}(k)\}} \varphi_{k0}(\bar{x}_k(\bar{x}_1)) = c$$

The system admits as many equilibria as this equation has roots. In case (B), the left-hand side is increasing from 0 when $\bar{x}_1$ increases from 0 to $\bar{x}_1^m$ (because of the second term). Therefore, if there exists an equilibrium, it is unique. In case (C), the left-hand side is strictly increasing from 0 to $+\infty$ when $\bar{x}_1$ increases from 0 to $+\infty$ (because of the $\mu\bar{x}_1$ term), so that the equilibrium exists and it is unique.

The final point of (C) is a direct consequence of (4); this implies

$$\frac{d}{dt}(\sum_{l=1}^{n} x_l) \leq c - \mu \sum_{l=1}^{n} x_l$$

which clearly implies boundedness of the solutions when $\mu > 0$. □

Uniqueness of the equilibrium, especially when it is coupled with boundedness of solutions, gives hope of the possibility of having some general result about the structural global asymptotic stability of the equilibrium. In the next section, we study a special case of feedback inhibition, in which we will be able to prove global attractivity.

## 4. STABILITY OF A CLASS OF METABOLIC NETWORKS

In this section, we will study the stability of the equilibrium of a class of metabolic networks belonging to the family that was described in Section 2. In order to do that, we will first present a technical lemma.

### 4.1 *Technical lemma*

In order to analyze the stability of the considered metabolic networks, we will use the small-gain theorem of De Leenheer, Angeli & Sontag (2003) for the interconnection of monotone systems. Due to space limitation, the details of this theory are omitted here, and we only give two lemmas that we will use in the following sections (and which are proven in Grognard, Chitour & Bastin (2003). Let us consider the stability of a system

$$\dot{x} = f(x) \quad x \in I\!R^n \tag{6}$$

which is not cooperative, but which satisfies the following assumption:

**Assumption** *3.* Each off-diagonal element of the Jacobian $\mathcal{J}$ of $f(x)$ is sign-definite (independent of $x$).

We then build a new system $\dot{x} = F(x, -v)$ according to the following construction: for all $i, j$ with $j \neq i$, if $\mathcal{J}_{ij} < 0$, then replace $x_j$ in $f_i(x)$ with the constant $-v_j$. Define $u_1$ as the vector that contains all the constants $v_j$ that are necessary for the preceding construction (not necessarily all $j$ have been required); we denote those constants by $v_{s_1}, \cdots, v_{s_l}$. From this construction, it directly appears that the system

$$\dot{x} = F(x, -u_1) \tag{7}$$

is cooperative (in the sense defined in De Leenheer et al. (2003)) We then define the output of (7) as $y_1 = (x_{s_1}, \cdots, x_{s_l})^T$. The interconnection of system (7) with the trivial system

$$y_2 = u_2 \tag{8}$$

through the feedback connections $u_1 = -y_2$ and $u_2 = y_1$ results in the original system (6). We can then show the following lemma

**Lemma** *1.* Suppose that the solutions of (6) are bounded and that system (7) has a unique globally attractive equilibrium for any constant input $u_1$ (this equilibrium defines an input output characteristic $\bar{y}_1 = k_{y_1}(u_1)$ for system (7)). Suppose that the expression of $y_1 = k_{y_1}(u_1)$ is unknown, but that it is known that it satisfies equation

$$y_1 = G(y_1, u_1)$$

then system (6) has a unique globally attractive equilibrium if there exists a norm $\|.\|$ such that

$$\sup_{u_1,\, y_1 \in I\!R^m} \|\frac{\partial G}{\partial y_1}\| + \|\frac{\partial G}{\partial u_1}\| < 1 \tag{9}$$

and if the unique equilibrium of system (7) with $u_1$ constant is globally attractive for any $u_1$.

**Proof:** see Grognard et al. (2003)

### 4.2 *Feedback inhibition*

The metabolic networks that we will consider for our stability study are made up of an arborescence of mono-molecular enzyme-catalysed reactions which satisfy the assumption that only one type of inhibition is present: the inhibition of the reactions that use $X_1$ as substrate. Also, a metabolite $X_m$ can only inhibit the reaction $X_1 \longrightarrow X_p$, which is the first reaction of the unique elementary path linking $X_1$ to $X_m$ (this is a consequence of the third point of Assumption 2). This translates into

**Assumption** *4.*
- For all $k \notin \mathcal{P}(1)$, $x^{[k]} = \emptyset$.

For simplification of notations, we will denote the elements of $\mathcal{P}(1)$ as $\{k_1, \cdots, k_r\}$.

A mass-balance model for such a network fits in the structure that was described in the previous section, so that we know that there is a single equilibrium. The model can be written as (1)- (2)-(3), but is particularized due to the presence of Assumption 4:

$$\dot{x}_1 = c - \sum_{i=1}^{r} \varphi_{1k_i}(x_1, x^{[k_i]}) - \mu x_1 \tag{10}$$

$$\dot{x}_{k_i} = \varphi_{1k_i}(x_1, x^{[k_i]}) - \sum_{j \in \mathcal{P}(k_i)} \varphi_{k_i j}(x_{k_i}) - \mu x_{k_i} \tag{11}$$

$$\dot{x}_k = \varphi_{lk}(x_l) - \sum_{j \in \mathcal{P}(k)} \varphi_{kj}(x_k) - \mu x_k \tag{12}$$

where $x_{k_i}$ is a product of $x_1$ and $x_k$ of $x_l \neq x_1$. We impose the boundedness of the partial derivatives of $\varphi_{ij}$ in the following assumption:

**Assumption** *5.* There exist $d_{ij} \geq 0$, $\alpha_b^{[k_j]} \geq 0$ such that

$$\begin{aligned} 0 \quad &\leq \quad \frac{\partial \varphi_{ij}}{\partial x_i} \quad \leq d_{ij} \quad \text{for all } i, j \\ -\alpha_b^{[k_j]} \leq & \frac{\partial \varphi_{1k_j}}{\partial x_b^{[k_j]}} \leq \quad 0 \quad \text{for all } j \leq r,\, b \leq n_j \end{aligned}$$

We now define a new notation

**Notation** *2.* From the arborescence structure, we know that there exists a unique path from $X_1$ to any metabolite $X_s$. This path takes the form $X_1 \rightarrow X_{k_j} \rightarrow \cdots X_k \rightarrow X_l \rightarrow \cdots \rightarrow X_w \rightarrow X_s$; if $X_s$ is an arbitrary metabolite, we will store the indices of this path (without 1 and $s$) in $C_s$; alternatively, if $x_s$ corresponds to some $x_b^{[k_j]}$, we will also denote this path $C_b^{[k_j]}$. Similarly, we denote $g_s(k)$ or $g_b^{[k_j]}(k)$ the index of the metabolite that follows $X_k$ in the path that connects $X_1$ to $X_s$.

This allows for the following theorem

*Theorem 2.* If Assumptions 1, 2, 4 and 5 are satisfied and

$$\sum_{j=1}^{r} \sum_{b=1}^{n_{k_j}} \left[ \left( \frac{d_{1,k_j}}{\mu} + 1 \right) \prod_{k \in C_b^{[k_j]}} \frac{d_{kg_b^{[k_j]}(k)}}{\mu + d_{kg_b^{[k_j]}(k)}} \right] < \frac{\mu}{\max_{k_s, c} \alpha_c^{[k_s]}} \tag{13}$$

and $\varphi_{1k_i}$ is bounded for all $i \in \{1, \cdots, r\}$ ($0 \leq \varphi_{1k_i} \leq B_{k_i}$), then the equilibrium of system (10)-(11)-(12) is globally attractive in the positive orthant.

**Proof:** The proof of this Theorem is an application of Lemma 1 (see Grognard et al. (2003)). The decomposition of (10)-(11)-(12) as in (7) is done by replacing all the inhibiting terms $x^{[p]}$ with the constant vector $-u_1$.

We see that, despite the fact that the inhibition is classically presented as a negative feedback that regulates the system, we have only been able to prove global attractivity under the restrictive condition (13), while stability is easily seen in the absence of inhibition. This condition is very strong, especially if the specific growth rate is small. We will analyze this condition further in the next section.

## 5. LIMIT CYCLES IN METABOLIC NETWORKS

Having obtained the sufficient result for global attractivity of Theorem 2, it is relevant to ask two questions: is condition (13) necessary and sufficient, on the one hand, and is Theorem 2 still valid without condition (13) on the other hand? The answer to the first question is easily seen to be "no": the stability of the equilibrium is retained even if condition (13) is slightly violated (a few simulations of simple systems is already convincing). In this section, we will show that the answer to the second question is also "no": without condition (13), the stability can be lost, so that we see that the stability of the metabolic networks is not a simple consequence of the structure of the models. Indeed, in this section, we shall exhibit an example where the equilibrium becomes unstable with a limit cycle (Hopf bifurcation) when condition (13) is not satisfied. We will concentrate on the stability of the equilibrium of a simple sequential pathway of four metabolites without branching and with sequential feedback inhibition (that was presented at the end of Section 2). Each metabolite produces a single other metabolite, and $X_1 \longrightarrow X_2$ is inhibited by the last metabolite, $X_4$. We can directly apply Theorem 2 to this system:

$$\begin{cases} \dot{x}_1 = 1.71 - \dfrac{1}{1 + (x_4/19)^p} \dfrac{3.2x_1}{1 + x_1} - 0.01x_1 \\ \dot{x}_2 = \dfrac{1}{1 + (x_4/19)^p} \dfrac{3.2x_1}{1 + x_1} - \dfrac{1.4x_2}{1 + x_2} - 0.01x_2 \\ \dot{x}_3 = \dfrac{1.4x_2}{1 + x_2} - \dfrac{1.2x_3}{1 + x_3} - 0.01x_3 \\ \dot{x}_4 = \dfrac{1.2x_3}{1 + x_3} - \dfrac{x_4}{1 + x_4} - 0.01x_4 \end{cases} \tag{14}$$

where we take $\varphi_1(x_1, x_4) = \frac{1}{1+(x_4/19)^p} \frac{3.2x_1}{1+x_1}$. The parameter $p$ mainly influences the maximal slope of the inhibiting factor $\frac{1}{1+(x_4/19)^p}$ (which takes place in $x_4 = 19$). Condition (13) becomes

$$\frac{\alpha}{\mu} \left( \frac{d_1}{\mu} + 1 \right) \frac{d_2}{\mu + d_2} \frac{d_3}{\mu + d_3} < 1 \equiv p < 3.16\ 10^{-5}$$

which is a condition very similar to what was obtained in Chitour et al. (2003). This condition is very strong because it is based on a small-gain analysis. System (14) has a single equilibrium in $x = (19, 19, 19, 19)^T$.

At the equilibrium, we can see that the characteristics polynomial of the Jacobian matrix has the form

$$(s+0.0140)(s+0.0135)(s+0.0130)(s+0.0125) \\ +4.2\,10^{-7}p(s+0.01)$$

which is Hurwitz for $p < 56.4519$, and is not Hurwitz for $p$ larger than that value. This transition from a stable to an unstable equilibrium is illustrated on Figure 2, where the time responses of the four states is illustrated for the value of $p = 0$ (no inhibition), $p = 10$ (weak inhibition), and $p = 60$ (strong inhibition). In the latter case, oscillations appear. This corresponds to a limit cycle in the state-space. A Hopf bifurcation has taken place in $p = 56.4519$. Despite this oscillation, the reaction rates for the three reactions $X_2 \longrightarrow X_3$, $X_3 \longrightarrow X_4$, and $X_4 \longrightarrow$ ... are close to their maximum after the transient. The only limiting reaction is $X_1 \longrightarrow X_2$ which, due to the inhibition is far from its maximum reaction rate.

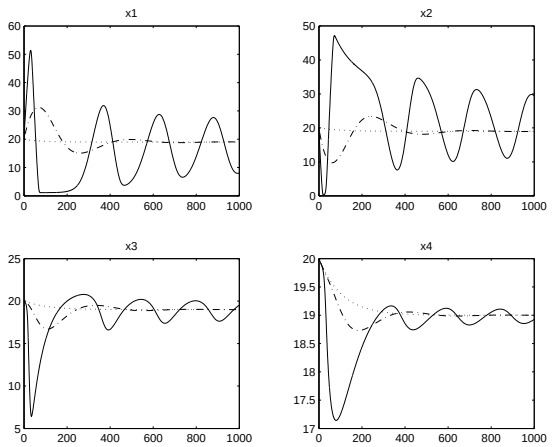


Fig. 2. Evolution of the states of system (14) for $p = 0$ (dotted line), p=10 (dash-dotted line) and $p = 60$ (solid line).

## 6. CONCLUSION

In this paper, we have shown that a large class of models of metabolic system only has a single equilibrium. We then have proven that, under a small gain condition, this equilibrium is globally attractive in the particular case where inhibition only acts on reaction having the root as substrate. Finally, we have shown that stability of this equilibrium is not a generic property of the metabolic systems: a condition needs to be imposed on the parameters to have stability (similar to the small gain condition that we found).

## 7. REFERENCES


Chitour Y., Grognard F. and Bastin G., “Stability analysis of a metabolic model with sequential feedback inhibition,” in “Positive Systems and Applications. Proceedings of the First Multidisciplinary Symposium on Positive Systems (POSTA 2003)”, edited by Luca Benvenuti, Alberto De Santis and Lorenzo Farina, Lecture Notes on Control and Information Sciences vol. 294, Springer-Verlag, Heidelberg, 2003.

De Leenheer P., Angeli D. and Sontag E.D., “Small-gain theorems for predator-prey systems,” in “Positive Systems and Applications... “ (see Reference Chitour et al.)

Grognard F., Chitour Y., Bastin G., ”Equilibria and stability analysis of a branched metabolic network with feedback inhibition,” submitted to Mathematical Biosciences.

Stephanopoulos G., Aristidou A. and Nielsen J., “Metabolic Engineering: Principles and Methodologies,” Academic Press, 1997.

Umbarger H.E., “Amino acid biosynthesis and regulation,” Ann. Rev. Biochem., vol. 47, 533-606, 1978.