HAL
open science

New cascade model for hierarchical joint classification of multitemporal, multiresolution and multisensor remote sensing data

Ihsen Hedhli, Gabriele Moser, Josiane Zerubia, Sebastiano B. Serpico

To cite this version:

Ihsen Hedhli, Gabriele Moser, Josiane Zerubia, Sebastiano B. Serpico. New cascade model for hierarchical joint classification of multitemporal, multiresolution and multisensor remote sensing data. IEEE ICIP - International Conference on Image Processing, Oct 2014, Paris, France. hal-01071034

HAL Id: hal-01071034

https://inria.hal.science/hal-01071034v1

Submitted on 3 Oct 2014

HAL is a multi-disciplinary open access archive for the deposit and dissemination of scientific research documents, whether they are published or not. The documents may come from teaching and research institutions in France or abroad, or from public or private research centers.

L'archive ouverte pluridisciplinaire **HAL**, est destinée au dépôt et à la diffusion de documents scientifiques de niveau recherche, publiés ou non, émanant des établissements d'enseignement et de recherche français ou étrangers, des laboratoires publics ou privés.

NEW CASCADE MODEL FOR HIERARCHICAL JOINT CLASSIFICATION OF MULTITEMPORAL, MULTIRESOLUTION AND MULTISENSOR REMOTE SENSING DATA

Ihsen HEDHLI[*†], *Gabriele MOSER*[†], *Josiane ZERUBIA*[*] *and Sebastiano B. SERPICO*[†]

[*] INRIA, AYIN research team, Sophia-Antipolis, France.
[†] Department of Electrical, Electronic, and Telecommunications Engineering and Naval Architecture (DITEN) – University of Genoa, Italy.

ABSTRACT

In this paper, we propose a novel method for the joint classification of multidate, multiresolution and multisensor remote sensing imagery, which represents a vital and fairly unexplored classification problem. The proposed classifier is based on an explicit hierarchical graph-based model sufficiently flexible to deal with multisource coregistered time series of images collected at different spatial resolutions [1]. An especially novel element of the proposed approach is the use of multiple quad-trees in cascade, each associated with each new available image at different dates, with the aim to characterize the temporal correlations associated with distinct images in the input time series. Experimental results are shown with multitemporal and multiresolution Pléiades data.

***Index Terms*—** Image time series, Multitemporal classification, hierarchical multiresolution Markov random fields.

1. INTRODUCTION

The capabilities to monitor the Earth surface play primary roles from multiple social, economic, and human viewpoints. Nowadays, a wide variety of remote sensing images are available, that convey a huge potential for such applications, as they allow a spatially distributed and temporally repetitive view of the monitored area at the desired spatial scales.

In this framework, accurate and time-efficient classification methods are especially important tools to support rapid and reliable assessment of the ground changes. Given the huge amount and variety of data available currently from last-generation very-high resolution (VHR) satellite missions, (such as Pléiades, COSMO-SkyMed, or WorldView-2), the main difficulty is to develop a classifier that can take benefit of multiband, multiresolution, multidate, and possibly multisensor input imagery.

The proposed method addresses the problem of multitemporal image classification and allows input data collected at multiple resolutions to be effectively exploited for classification purposes without resampling. The approach consists of a supervised Bayesian classifier that combines a joint class-conditional statistical model for pixelwise information and a hierarchical Markov random field (MRF) for spatio-temporal and multiresolution contextual information [2] [3].

This paper is organized as follows: In Section 2, we focus on the new hierarchical method for classification in multidate imagery by detailing the mathematical modeling used in this classifier. First results of the use of this new hierarchical model in time series classification are presented in Section 3. Finally, we conclude and highlight some future works in Section 4.

2. THE PROPOSED MULTIDATE HIERARCHICAL MODEL

Given an input time series of remote sensing images acquired at multiple spatial resolutions, a multiscale and multitemporal model is proposed to fuse the related spatial, temporal, and multiresolution information. Two Bayesian approaches can generally be adopted for this purpose. The 'cascade' classifier (e.g., [4]) removes the coupling between the spectral and temporal dimensions and classifies each image in the input series on the basis of itself and of the previous images. The ‘mutual’ approach classifies each image on the basis of the previous and the subsequent images in the series [5][6]. The two approaches are basically complementary in terms of applicability: online processing can be feasible within the cascade domain, whereas the

We would like to thank the French Space Agency (CNES) for providing the data and for partial financial support.

mutual domain can be generally more appropriate for batch processing. The cascade approach is adopted in the method proposed in this paper. This model is a hierarchical spatio-temporal and multiresolution MRF integrated in a quad-tree structure.

2.1. Notations and definitions

Here, we define the notations that are used throughout this paper. s defines a site (pixel) and belongs to a finite set S. V_s describes the neighborhood of s and V is the set of neighborhoods. The couple (S, V) defines a graph G. We shall focus on a specific graph, namely a tree. The set of sites is then hierarchically partitioned, i.e.: $S = S^0 \cup S^1 \cup \cdots \cup S^R$ where R corresponds to the coarsest resolution (the root of the tree), 0 corresponds to the finest resolution (the leaves of the tree) and S^i indicates the subset of nodes associated with the ith level of the tree ($i = 0, 1, 2, \ldots, R$). In the considered structure a parent-child relationship can be defined: for each site s in $S \setminus \{S^0, S^R\}$ a unique parent s^- and several children s^+ are well defined. Sites at the root level S^R do not own any parent and sites at the finest level S^0 do not own any children. We also define $d(s)$ as the set including s and its descendants. For the specific case in which s owns four children, the tree structure is named quad-tree.

The aim of classification is to estimate a set of hidden labels X (e.g., land cover class labels) given a set of observations Y (e.g., satellite data) attached to the sites (pixels). X and Y are considered as random processes, the restriction of X (resp. Y) to the level n is $X^n = \{X_s, s \in S^n\}$ (resp. $Y^n = \{Y_s, s \in S^n\}$). Some extra hypotheses are needed to ensure that X is Markovian with respect to scale, i.e.

$$p(x^n | x^k, k > n) = p(x^n | x^{n+1}), \tag{1}$$

Where n and k are scales and x^n is a realization of X at scale n.

2.2. Multitemporal MPM model

An especially novel element of the proposed approach is the use of multiple quad-trees in cascade, each associated with the set of images available at each observation date y in the considered time series. Specifically, for each date, the input images are inserted in the quad-tree structure on the basis of their resolutions, while missing levels of the tree are filled in with wavelet transforms of the images embedded in finer-resolution levels [7]. This approach is aimed at both exploiting multiscale information, which is known to play a crucial role in very high resolution image analysis, and to support input images acquired at different resolutions.

The choice of a quad-tree structure relies on the good properties of this configuration such as the causality in scale, under Markovian assumption, which allows the use of a non-iterative algorithm and to integrate an exact estimator of the maximizer of posterior marginal (MPM) [8] [9]. The aim is to maximize recursively the posterior marginal at each site s:

$$\hat{x}_s = \arg\max_{x_s} [p(x_s | y)] \tag{2}$$

i.e., the probability distribution of the label of each site, conditioned to the whole set of available observations in the quad-tree. Specifically, a novel formulation of MPM is proposed for the resulting multitemporal quad-tree. The posterior marginal $p(x_s | y)$ of the label of each spatio-temporal site s is expressed as a function not only of the posterior marginal $p(x_{s^-} | y)$ of the parent node s^- in the corresponding quad-tree but also of the posterior marginal $p(x_{s^=} | y)$, of the parent node $s^=$ in the quad-tree associated with the previous date, with the aim to characterize the temporal correlations associated, at different scales, with distinct images in the input time series:

$$\mathbf{p}(\mathbf{x_s} | \mathbf{y}) = \sum_{x_{s^-}, x_{s^=}} \left[p(x_s | x_{s^-}, x_{s^=}, y) . \, p(x_{s^=}, x_{s^-} | y) \right] \tag{3}$$

$$= \sum_{x_{s^-}, x_{s^=}} \left[p(x_s | x_{s^-}, x_{s^=}, y_{d(s)}) . \, p(x_{s^=}, x_{s^-} | y) \right]$$

$$= \sum_{x_{s^-}, x_{s^=}} \left[\frac{p(x_s, x_{s^-}, x_{s^=} | y_{d(s)})}{\sum_{x_s} p(x_s, x_{s^-}, x_{s^=} | y_{d(s)})} . \, p(x_{s^-}, x_{s^=} | y) \right]$$

$$= \sum_{x_{s^-}, x_{s^=}} \left[\frac{p(x_s, x_{s^-}, x_{s^=} | y_{d(s)})}{\sum_{x_s} p(x_s, x_{s^-}, x_{s^=} | y_{d(s)})} . \, p(x_{s^-} | x_{s^=}, y) \, p(x_{s^=} | y) \right]$$

$$= \sum_{x_{s^-}, x_{s^=}} \left[\frac{p(x_s, x_{s^-}, x_{s^=} | y_{d(s)})}{\sum_{x_s} p(x_s, x_{s^-}, x_{s^=} | y_{d(s)})} . \, \mathbf{p}(\mathbf{x_{s^-}} | , \mathbf{y}) \, \mathbf{p}(\mathbf{x_{s^=}} | \mathbf{y}) \right]$$

Where bold type highlights the role of the recursively computed posterior marginals. These equations involve two conditional independence assumptions: (i) the label x_s depends only on the data of the site and their descendants, so $p(x_s | y, x_{s^-}, x_{s^=}) = p(x_s | y_{d(s)}, x_{s^-}, x_{s^=})$; and (ii) the label at parent s^- is independent of the label at parent $s^=$ at the previous date, when conditioned to the data y, so $p(x_{s^-} | x_{s^=}, y) = p(x_{s^-} | y)$. The multidate MPM algorithm runs in two passes on a quad tree, referred to as "bottom-up" and "top-down" passes, similar to the classical MPM in a single date (see Figure 1). The aim is to calculate recursively the posterior marginal $p(x_s | y)$ as well as the probabilities $p(x_s, x_{s^-}, x_{s^=} | y_{d(s)})$ are made available. This is achieved by a preliminary bottom-up pass based on:

$$p(x_s, x_{s^-}, x_{s^=} | y_{d(s)}) = p(x_s | x_{s^-}, x_{s^=}) . \frac{p(x_{s^-} | x_{s^=}) . \, p(x_{s^=})}{p(x_s)} . \, p(x_s | y_{d(s)}) \tag{4}$$

The first factor $p\left(x_s \mid x_{s^-}, x_{s^=}\right)$ corresponds to the child-parent transition probability; $p\left(x_s\right)$ is the prior probability computed using a top down pass via:

$$p\left(x_s\right) = \sum_{x_{s^-}, x_{s^=}} \left[p\left(x_s \mid x_{s^-}\right) . \, p\left(x_{s^-}\right) \right] \quad (5)$$

$p\left(x_{s^-} \mid x_{s^=}\right)$ is the temporal transition in the same scale. An upward recursion allows computing the posterior marginal $p\left(x_s \mid y_{d(s)}\right)$ using the formulation introduced by Laferte [5] for the single date case:

$$p\left(x_s \mid y_{d(s)}\right) \propto$$

$$p\left(y_s \mid x_s\right) . \, p\left(x_s\right) . \prod_{t \in s^+} \sum_{x_t} \left[\frac{p\left(x_t \mid y_{d(t)}\right)}{p\left(x_t\right)} . \, p\left(x_t \mid x_s\right) \right] \quad (6)$$

The steps defined above involve the pixel-wise class-conditional PDFs of the image data at each node of each quad-tree, given the corresponding (satellite or wavelet) features and the transition probabilities between consecutive scales and consecutive dates.

2.3. Likelihood term

Given a training set for each input date, for each class, scale, acquisition time, and (satellite or wavelet) feature, we model the corresponding class-conditional marginal PDF using a finite Gaussian mixture [10]. The use of finite mixtures instead of single PDFs offers the possibility to consider heterogeneous PDFs, usually reflecting the contributions of the different materials present in each class. Such class heterogeneity is relevant since we deal with VHR images. The parameters of the mixture model are estimated through the stochastic expectation maximization (SEM) algorithm [11], which is an iterative stochastic parameter estimation algorithm developed for problems characterized by data incompleteness and approaching, under suitable assumptions, maximum likelihood estimates.

Given the resulting marginal conditional PDF estimates, joint conditional PDF estimates are obtained through copula functions. According to Sklar's theorem [12], an arbitrary joint PDF can be expressed in terms of the corresponding marginal PDFs and of a copula function. In the proposed method, we wish to determine this specific joint PDF for each scale level of each quad-tree in the cascade model given the aforementioned marginal distributions. Specifically, the approach proposed in [13] is used for class-conditional PDF estimation, that is based on a dictionary of parametric copula models.

The advantage of using copulas, over the choice of a specific parametric model (e.g., multivariate Gaussian or elliptically contoured distributions), is that they enable modeling the dependence structure of any type of features. The use of copulas in the joint PDF modeling becomes especially relevant when the dependence between the source features is strong [7] [13].

2.4. Transition probabilities

The transition probabilities between consecutive scales and consecutive dates determine the properties of the hierarchical MRF because they formalize the causality of the statistical interactions involved. As such, they need to be carefully defined.

2.4.1. Transition between scales

The fundamental hypothesis in the described hierarchical MRF is to consider the Markovianity on scale (see Eq. (1)).

To define the transition probability $p\left(x_s \mid x_{s^-}\right)$ we use the formulation introduced by Bouman and Shapiro [14], for all sites $s \in S$ and all scales $n \in [0; R-1]$,

$$p\left(x_s \mid x_{s^-}\right) = \begin{cases} \theta_n & x_s = x_{s^-} \\ \frac{1-\theta_n}{M-1} & x_s \neq x_{s^-} \end{cases}, \quad (7)$$

With the parameter $\theta_n > 1/M$ where M is the number of considered classes.

2.4.2. Transition between consecutive observation times

In the proposed method, there is two kinds of probabilities that involve time: The temporal transition in the same scale $p\left(x_{s^-} \mid x_{s^=}\right)$, estimated using a specific formulation of the expectation-maximization (EM) algorithm [6], and the child-parent transition probability $p\left(x_s \mid x_{s^-}, x_{s^=}\right)$. We use here a new formulation of the transition probability model proposed by Bouman and Shapiro, which favors identity between children and parents (in current and previous dates), all other transitions being unlikely:

$$p\left(x_s \mid x_{s^-}, x_{s^=}\right) = \begin{cases} \theta_n & x_s = \left(x_{s^-} = x_{s^=}\right) \\ \varphi_n & x_s = \left(x_{s^-} \neq x_{s^=}\right) \\ \frac{1-\theta_n}{M-1} & x_s \neq \left(x_{s^-} = x_{s^=}\right) \\ \frac{1-2\varphi_n}{M-2} & x_s \neq \left(x_{s^-} \neq x_{s^=}\right) \end{cases} \quad (8)$$

With the parameters $\theta_n > 1/M$ and $1/M < \varphi_n < 1/2$.

3. EXPERIMENTAL RESULTS

Preliminary experiments have been performed with a time series of panchromatic and multispectral Pléiades images acquired over Port-au-Prince (Haiti). For the sake of brevity, only results associated with a pair of images acquired on 2011 and 2013 are shown in this paper (see Figure 2). The finest resolution of the multiresolution pyramid (level 0) is set equal to the finest resolution of the input images (0.5-m panchromatic). Co-registered 2-m multispectral images are integrated in level 2 of the pyramid. Level 1 is filled in through Haar wavelet decomposition of the panchromatic image [10]. Preliminary experiments suggested the Haar transform to be especially effective in the application within

the proposed method. Five land cover classes have been considered: urban (red), water (blue), vegetation (green), soil (yellow) and containers (mauve). A preliminary visual analysis of the resulting classification maps has suggested that the proposed hierarchical method leads to accurate results, especially as compared to separate hierarchical classification at each individual date (e.g., [4]). These results suggest the effectiveness of the proposed multitemporal hierarchical model in fusing the temporal, spatial, and multiresolution information associated with the input data. In particular, the main source of misclassification in the single-date results is the confusion between the "urban" and "soil" classes (e.g., see highlighted regions in Figure 2(c), (d), and (e)); this misclassification is reduced in the multitemporal classification obtained by the proposed method thanks to the modeling of the temporal relationships among the input multiresolution data.

4. CONCLUSION

The proposed method allows performing joint classification on multidate, multiband, and multiresolution imagery. It combines a joint statistical modeling of the considered input images and a hierarchical MRF model for spatio-temporal and multiresolution contextual information, leading to a statistical supervised classification approach. Moreover, one main advantage of the proposed classifier is that it can be extended to the use not only of optical data, but also of synthetic aperture radar (e.g. COSMO-SkyMed) or multisensor data. The extension to the multisensor case will be a major direction of further research.

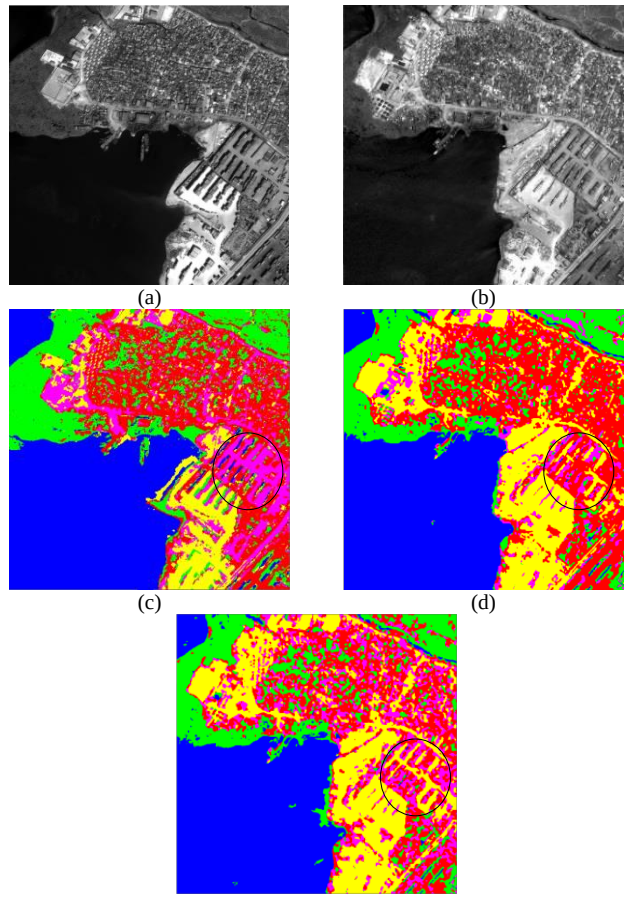

Figure 2: (a) Panchromatic image of Port au Prince (Pléiades) in 2011 © CNES, (b) Panchromatic image of Port au Prince (Pléiades) in 2013 © CNES, (c) Classification map for 2011, obtained using the multispectral and panchromatic images acquired in 2011, (d) Classification map for 2013, obtained through the method in [7] using only the multispectral and panchromatic images acquired in 2013, (e) Classification map for 2013, obtained through the proposed cascade method using the multispectral and panchromatic images acquired in 2011 and 2013.

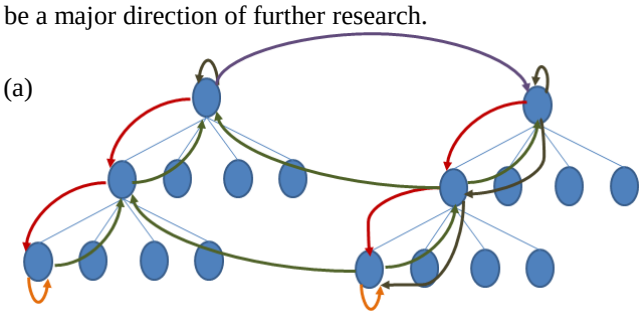

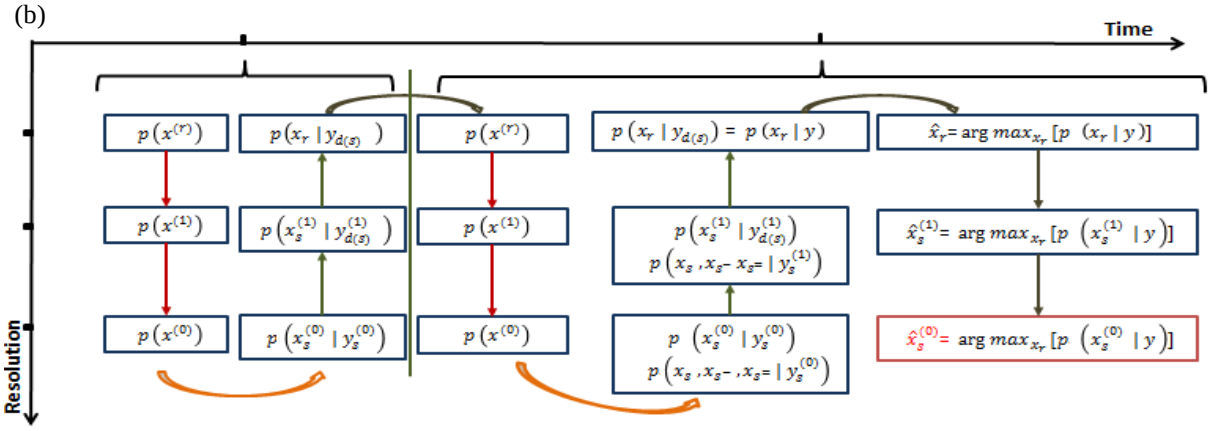

Figure 1: (a) Transitions on quad-trees, (b) Multidate MPM estimation on the quad-tree: R=2 and two dates.

4. REFERENCES

[1] A. A. Goshtasby, 2-D and 3-D image registration: for medical, remote sensing, and industrial applications. Wiley-Interscience, 2005.

[2] P. Fieguth, Statistical image processing and multidimensional modeling. Springer, 2011.

[3] C. Tison, J.-M. Nicolas, F. Tupin, and H. Maitre, "A new statistical model for Markovian classification of urban areas in high-resolution SAR images," IEEE Trans. Geosci. Remote Sens., vol. 42, no. 10, pp. 2046–2057, 2004

[4] P.H. Swain, "Bayesian classification in a time-varying environment," *IEEE Transactions on Systems, Man and Cybernetics*, pp. 879-883, 1978.

[5] F. Melgni and S.B. Serpico, "A Markov Random Field Approach to Spatio-Temporal Contextual Image Classification" *IEEE Transactions on Geoscience and Remote Sensing*, vol. 41, No. 11, pp. 2478-2487, 2003.

[6] L. Bruzzone, D.F. Prieto and S.B. Serpico, "A Neural-Statistical Approach to Multitemporal and Multisource Remote-Sensing Image Classification" *IEEE Transactions on Geoscience and Remote Sensing*, vol. 37, no. 3, pp. 1350-1359, 1999.

[7] A. Voisin, V. A. Krylov, G. Moser, S. B. Serpico and J. Zerubia, "Supervised classification of multisensor and multiresolution remote sensing images with a hierarchical copula-based approach" *IEEE Transactions on Geoscience and Remote Sensing*, in print (http://hal.inria.fr/hal-00841234).

[8] J. Marroquin, S. Mitter, and T. Poggio, "Probabilistic solution of ill-posed problems in computational vision," Journal of the American Statistical Association, vol. 82, no. 397, pp. 76–89, 1987.

[9] J.M. Laferte, P. Perez, and F. Heitz, "Discrete Markov modeling and inference on the quad-tree," *IEEE Transactions on Image Processing, vol. 9, no. 3*, pp. 390–404, 2000.

[10] S. G. Mallat, A wavelet tour of signal processing, 3rd ed. Academic Press, 2008.

[11] G. Celeux, D. Chauveau, and J. Diebolt, "Stochastic versions of the EM algorithm: an experimental study in the mixture case," *Journal of Statistical Computation and Simulation*, vol. 55, no. 4, pp. 287–314, 1996.

[12] R.B. Nelsen, *An introduction to copulas*, Springer, New York, 2006.

[13] V. Krylov, G. Moser, S. B. Serpico, and J. Zerubia, "Supervised high resolution dual polarization SAR image classification by finite mixtures and copulas," *IEEE J. Sel. Top. Signal Proc.*, vol. 5, no. 3, pp. 554–566, 2011.

[14] C. Bouman and M. Shapiro, "A multiscale random field model for Bayesian image segmentation," IEEE Trans. Image Process., vol. 3, no. 2, pp. 162–177, 1994.