HAL open science

A Formal Notion of Objective Expectations in the Context of Multiagent systems Routines

Antonio Rocha Costa, Graçaliz Pereira Dimuro, Julie Dugdale, Yves Demazeau

To cite this version:

Antonio Rocha Costa, Graçaliz Pereira Dimuro, Julie Dugdale, Yves Demazeau. A Formal Notion of Objective Expectations in the Context of Multiagent systems Routines. EPIA 2009 - New Trends in Artificial Intelligence, 14th Portuguese Conference on Artificial Intelligence, Oct 2009, Aveiro, Portugal. pp.367-378. hal-00950937

HAL Id: hal-00950937

https://inria.hal.science/hal-00950937v1

Submitted on 25 Feb 2014

HAL is a multi-disciplinary open access archive for the deposit and dissemination of scientific research documents, whether they are published or not. The documents may come from teaching and research institutions in France or abroad, or from public or private research centers.

L'archive ouverte pluridisciplinaire **HAL**, est destinée au dépôt et à la diffusion de documents scientifiques de niveau recherche, publiés ou non, émanant des établissements d'enseignement et de recherche français ou étrangers, des laboratoires publics ou privés.

A Formal Notion of Objective Expectations in the Context of Multiagent Systems Routines

A.C.R. Costa[1], G.P. Dimuro[1], J. Dugdale[2], and Y. Demazeau[3]

[1] PPGINF, Universidade Católica de Pelotas, 96010-000 Pelotas, Brazil
[2] Laboratoire d'Informatique de Grenoble - Université Pierre-Mendes France
[3] Laboratoire d'Informatique de Grenoble - CNRS, BP 53 - 38041 Grenoble, France
{rocha,liz}@ucpel.tche.br,{Yves.Demazeau,Julie.Dugdale}@imag.fr

Abstract. This paper introduces an objective notion of *routine expectation*, to allow for the external account of expectations in the context of routine procedures, in multiagent systems (MAS). The notion of expectation as usually applied to MAS is briefly reviewed. A formalization of *routine procedure* is given, so that the formal notion of *routine expectation* can be defined with respect to actions and facts. A view previously proposed in the literature, to base expectation values on a combination of probability values and utility values, is adopted. However, it is adapted to the context of repetitive, periodic system routines, where utility values can be replaced by the *degrees of perfection* with which actions and facts are realized.

1 Introduction: motivation and related works

In general there are different ways of considering the notion of expectation in agent systems. For example, a *mentalist*, or *cognitivist* approach defines an expectation as a complex set of cognitive elements (a combination of goals, beliefs, etc.) [1]. Such kind of *subjectivist* approach may also take the way adopted in [2, 3], briefly suggested in [1], which gives expectations a combination of *probability values* and *utility values*, assigned to the *possible outcomes* of the actions (using the notion of *subjective expected utility values* [4]).

A crucial aspect of both these works is that an agent's expectation is related to a momentary situation in the system. That is, it relates to a situation that is artificially isolated from the whole behavior of the agent, and from the continuous operation of the system. The agent is seen as having a goal and performing an action at a given instant (or believing that a given event will happen that will help to achieve the goal), so that the entire past and future ways in which the agent participates in the system is not taken into account. Expectations about future agent interactions can not be adequately studied in such settings.

However, most practically important agent systems, including human ones, are important precisely because of their *continuous* functioning over time and, in particular, because of their repetitive, *periodic* functioning; that is, their *routines*. Routines have long been recognized as an essential feature of the operational dynamics of social systems (cf., e.g., Giddens in [5]), and the same idea seems to apply to multiagent systems.

Here the functioning aims at the continuous monitoring and/or control of some target system, or the continuous servicing of their users [6].

An example of the importance of periodic routines and expected patterns of behavior in managing electricity in home situations was seen in [7]. Also, modeling expectations seems very promising in the idea of developing personal assistants that will support a human user in his/her usual day-life activities [8].

We thus develop a *complementary* point of view. We formulate in set-theoretic terms an *objective*, *behavioristic* notion of expectation, centered around the *objective effects* of the actions that the agents perform, at a given moment, within the context of some *system routine*. We do not consider here, however, the possible ways in which the two approaches may be combined. Specially, we do not consider how the context of system routines can be integrated into the mentalist approach.

In this paper, we introduce two novel aspects concerning agent expectations. First, we extend the notion of expectation so that, in the context of system routines, it may be applied not only to the facts resulting from the execution of agent actions or environment events, but also to the actions and events themselves. In fact, we consider that *objective expectations of actions and events* are fundamental, and that *objective expectations of facts* should be derived from them. Accordingly, in Sect. 2 we formalize a notion of system routine where those two kinds of expectations may be defined.

Secondly, we would like to stay as close as possible to the *subjective expected utility values* approach to expectations. However, utility values, as such, can not be fruitfully considered in connection to actions and facts that happen in system routines. This is because routines are usually adopted in a system only when all the actions are clearly useful to the routines where they occur. That is, less useful actions tend to be replaced by actions more adapted, and thus more useful, to the routine and to the functioning of the system as a whole. If an action is included in a routine, or if a fact is counted upon by the routine to operate properly, it is clear that it certainly has a utility for the routine, and there is no point in trying to quantify that value. Therefore, in order that the *objective expected utility* of an action (or fact or event) could stay close to the model of *subjective expected utility*, it was necessary to replace the subjective components by corresponding objective components. Specially, the *subjective probabilities* and *utility values* that essentially constitute the subjective expected utility values were respectively replaced by *objective probabilities* and by *objective degrees of perfection* of the realization of actions, facts and events. This is explained in Sect. 3 of the paper.

A contextualized example of the approach is given in Sect. 4. Section 5 concludes the paper with a discussion.

2 Periodic Routines and their Performances

In the following, let Act be a finite set of agent actions and Ctx be the set of contexts where those actions may be performed, with the empty action denoted by ε. Let $T = t_0, t_1, \ldots$ be a linear, discrete time structure. The effects of the performance of an action $\alpha \in Act$, in a context $C \in Ctx$, at a certain time $t \in T$, may be defined in a rule-based form with the help of pre- and post-conditions, which can assume *degrees of perfection* varying in the interval $[0, 1]$, as the degrees of truth in Fuzzy Logic [11], as follows:

$$\frac{pre_1 : d_1 \ldots pre_n : d_n}{post_1 : f_1(d_1, \ldots, d_n) : min_1 \ldots post_m : f_m(d_1, \ldots, d_n) : min_m} [\alpha : C] \quad (1)$$

where $\mathrm{pre}[\alpha : C] = \{pre_1, \ldots, pre_n\}$, with $n \in \mathbb{N}$, is the set of pre-conditions to be evaluated at any time the action α is ready to be performed in the context C, and $d_1, \ldots, d_n$ are their respective degrees of perfection at that moment; $\mathrm{post}[\alpha : C] = \{post_1, \ldots, post_m\}$, with $m \in \mathbb{N}$, is the set of post-conditions that result from the performance of α in the context C, and $f_1(d_1, \ldots, d_n), \ldots, f_m(d_1, \ldots, d_n)$ are their respective *expected degrees of perfection* after that performance, determined by the functions $f_1, \ldots, f_m : [0, 1]^n \rightarrow [0, 1]$ that give the expected values of the post-conditions considering the degrees of perfection of all pre-conditions; $min_1, \ldots, min_n$, with $0 < min_i \leq 1$, are the minimum degrees of perfection required for the post-conditions in order that the performance of the action α be considered satisfactory. In particular, it holds that $d_i = 1$, for any $pre_i \in \mathrm{pre}[\varepsilon : C]$, and $f_j(d_1, \ldots, d_n) = min_j = 1$, for any $post_j \in \mathrm{post}[\varepsilon : C]$, in any context C.

An action α is said to be *satisfactorily performed* in the context C, at time $t \in T$, if and only if each post-condition assumes, at time $t + 1$, a degree of perfection equal or greater than the minimum degree of perfection required for that post-condition. In particular, a satisfactorily performed action α is said to be *perfectly performed* in the context C, at time t, if and only if all post-conditions assume, at time $t + 1$, a degree of perfection equal to 1. An action α is said to be *non-satisfactorily performed* in the context C, at time t, if and only if at least one of the post-conditions assumes, at time $t + 1$, a degree of perfection less than the minimum required for that post-condition. A non-satisfactorily performed action α is said to be *non-performed* at time t, if and only if all post-conditions assume, at time $t + 1$, a degree of perfection equal to 0.

Definition 1. *Let $\alpha \in Act$ be an action performed in the context C at time t. The* degree of satisfaction *of α's performance is given by the function $ds^t_{\alpha:C} : [0, 1]^m \rightarrow \{s, ns\} \times [0, 1]$. This evaluates the degrees of perfection $u_1, \ldots, u_m \in [0, 1]$ assumed, at time $t + 1$, by the post-conditions $post_1, \ldots, post_m$ of the action α. It generates a pair $ds^t_{\alpha:C}(u_1, \ldots, u_m) = (x, k) \in (\{s, ns\} \times [0, 1])$, where:*

(i) *$k \in [0, 1]$ is the* degree of perfection*, obtained by an operator $\tau : [0, 1]^m \rightarrow [0, 1]$, which is application dependent;*

(ii) *$x = s$ indicates that the action α was satisfactorily performed (so that $k > 0$; in particular, if $k = 1$ then the action α was perfectly performed);*

(iii) *$x = ns$ indicates that the action α was non-satisfactorily performed (so that $k < 1$; in particular, if $k = 0$ then α was non-performed);*

A *routine* over Act, in a context $C \in Ctx$, with period π, where $\pi \in \mathbb{N}$ and $\pi > 1$, is a permanently (i.e., infinitely) repeated, structured subset of actions of Act in C. The main repeated structured set of actions in a routine ρ is the *body* of ρ. The *set of all possible routine bodies* RB_{Act} is given by a set of regular expressions over Act:

- any action $\alpha \in Act$ is a routine body: $\alpha \in Act \Rightarrow \alpha \in RB_{Act}$
- if b and b' are routine bodies ($b, b' \in RB_{Act}$), then the following regular compositions of b and b' are also routine bodies:
  - $b; b' \in RB_{Act}$ (sequential composition of the routine bodies b and b');
  - $b + b' \in RB_{Act}$ (alternative composition of the routine bodies b and b');

Table 1. Recursive definitions of length and set of actions of routine bodies, for $b, b' \in RB_{Act}$

Length	Set of actions
$length(b) = 1$, if $b = \alpha \in Act$	$\mathrm{act}[b] = \{\alpha\}$, if $b = \alpha \in Act$
$length(b; b') = length(b) + length(b')$	$\mathrm{act}[b; b'] = \mathrm{act}[b] \cup \mathrm{act}[b']$
$length(b + b') = \max\{length(b), length(b')\}$	$\mathrm{act}[b + b'] = \mathrm{act}[b] \cup \mathrm{act}[b']$
$length(b \mid b') = length(b) + length(b')$	$\mathrm{act}[b \mid b'] = \mathrm{act}[b] \cup \mathrm{act}[b']$
$length(b^n) = n \cdot length(b)$	$\mathrm{act}[b^n] = \mathrm{act}[b]$

- $b \mid b' \in RB_{Act}$ (parallel composition of the routine bodies b and b');[4]
- $b^n \in RB_{Act}$ (n-times repetition of the routine body b, with $n \in \mathbb{N}$ and $n > 0$);

The $length$ of a routine body is defined as shown in the left-hand column of Table 1. The length of a routine's body is the *period* of that routine (note the case of the parallel composition, reserving a time slot for its eventual sequential realization, with one alternative fully performed before the other). So, any routine ρ, with period π, is such that $\rho = b^\omega$, where $b \in RB_{Act}$, $\pi = length(b)$, and ω indicates infinite repetition of the body b. The set of actions of the routine $\rho = b^\omega$, denoted by $\mathrm{act}[\rho]$, is the same as the set of actions of its body, as defined in the right-hand column of Table 1.

A *cut* of a routine ρ is any non-empty subset of actions in Act that the routine may simultaneously perform at a given time instant. The set of cuts of a routine $\rho = b^\omega$ is denoted by $\mathrm{Cuts}[\rho]$ and is the same as the set of cuts of its body $\mathrm{Cuts}[b]$, which is defined recursively as follows, for routine bodies $b, b' \in RB_{Act}$:

$$\begin{aligned}
\mathrm{Cuts}[b] &= \{\{\alpha\}\}, \text{ if } b = \alpha \in Acts \\
\mathrm{Cuts}[b; b'] &= \mathrm{Cuts}[b] \cup \mathrm{Cuts}[b'] \\
\mathrm{Cuts}[b + b'] &= \mathrm{Cuts}[b] \cup \mathrm{Cuts}[b'] \\
\mathrm{Cuts}[b \mid b'] &= \mathrm{Cuts}[b] \cup \mathrm{Cuts}[b'] \cup \{X \cup Y \mid X \in \mathrm{Cuts}[b], Y \in \mathrm{Cuts}[b']\} \cup \{\{\varepsilon\}\} \\
\mathrm{Cuts}[b^n] &= \mathrm{Cuts}[b]
\end{aligned}$$

The notion of a cut of a routine is central to our concept of routine expectation. It was drawn from the notion of cut in *occurrence nets* from Net Theory [12].

Definition 2. *Let ρ be a routine over Act and $\mathrm{Cuts}[\rho]$ be the set of cuts of ρ. A* performance *of a routine ρ in the context C is a periodic mapping*

$$\ll \rho : C \gg : T \to \wp(\mathrm{Cuts}[\rho]) \times \mathrm{Cuts}[\rho] \times \wp(Act) \times \wp(Act \times [0, 1]),$$

which gives, for each time $t \in T$, a 4-tuple where:

(i) *the first component $\ll \rho : C \gg^t [1]$ is the set of cuts* enabled *by the performance $\ll \rho : C \gg$ at time t;*

(ii) *the second component $\ll \rho : C \gg^t [2]$ is the cut* selected *to be performed at time t in $\ll \rho : C \gg$, among the enabled cuts at that time;*[5]

(iii) *the third component $\ll \rho : C \gg^t [3]$ is the* step *of the performance $\ll \rho : C \gg$ at time t, which is the subset of actions of the selected cut $\ll \rho : C \gg^t [2]$ that are put into execution by the system's agent(s) at time t;*

[4] Observe that the empty action ε is the neutral element of the parallel composition operator, that is, $\varepsilon \mid b = b \mid \varepsilon = b$, for any routine body b.

[5] A routine may enable more than one cut at a given time. However, only one cut must be selected to be performed at each time.

(iv) *the fourth component* $\ll \rho : C \gg^t [4]$ *is the* result *of the step* $\ll \rho : C \gg^t [3]$, *indicating the degree of satisfaction of the performance of each action of that step.*

The *period* of the performance $\ll \rho : C \gg$ is given by the period of ρ. The set of all possible performances $\ll \rho : C \gg$ of ρ in the context C is denoted by $\mathrm{Prfs}[\rho : C]$. The four components of a performance are accessed through the following functions:

Definition 3. *Consider a performance* $\ll \rho : C \gg \in \mathrm{Prfs}[\rho : C]$. *Then* [6]*:*

(i) *The* cuts enabled by the performance $\ll \rho : C \gg$ *in each time* t *are specified by a mapping* $\mathrm{ecuts} : \mathrm{Prfs}[\rho : C] \to T \to \wp(\mathrm{Cuts}[\rho])$, *such that the cuts enabled by a performance* $\ll \rho : C \gg$, *at a given time* $t \in T$, *is denoted by* $\mathrm{ecuts}[\ll \rho : C \gg]^t$ *and* $\mathrm{ecuts}[\ll \rho : C \gg]^t = \ll \rho : C \gg^t [1]$. *The* trace of subsets of enabled cuts *by* $\ll \rho : C \gg$ *in* T *is defined as the time-indexed sequence:* $\mathrm{trace}[\mathrm{ecuts}[\ll \rho : C \gg]]^T = \mathrm{ecuts}[\ll \rho : C \gg]^{t_0}, \mathrm{ecuts}[\ll \rho : C \gg]^{t_1}, \ldots$.

(ii) *The cuts of a routine* ρ *that are* selected *to be performed during the performance* $\ll \rho : C \gg$ *are selected among the enabled cuts in each time* t*; they are specified by a mapping* $\mathrm{scut} : \mathrm{Prfs}[\rho : C] \to T \to \mathrm{Cuts}[\rho]$, *such that, given the set of enabled cuts* $\mathrm{ecuts}[\ll \rho : C \gg]^t$, *the cut selected by* $\ll \rho : C \gg$ *to be executed at a given time* t *is denoted by* $\mathrm{scut}[\ll \rho : C \gg]^t$ *and* $\mathrm{scut}[\ll \rho : C \gg]^t = \ll \rho : C \gg^t [2] \in \mathrm{ecuts}[\ll \rho : C \gg]^t$. *The* trace of selected cuts *by* $\ll \rho : C \gg$ *in* T *is defined as the time-indexed sequence:* $\mathrm{trace}[\mathrm{scut}[\ll \rho : C \gg]]^T = \mathrm{scut}[\ll \rho : C \gg]^{t_0}, \mathrm{scut}[\ll \rho : C \gg]^{t_1}, \ldots$.

(iii) *The* steps *of the performance* $\ll \rho : C \gg$ *are specified by a mapping* $\mathrm{step} : \mathrm{Prfs}[\rho : C] \to T \to \wp(Act)$, *such that, given the selected cut* $\mathrm{scut}[\ll \rho : C \gg]^t$, *the subset of actions that are executed by the agent at the time* t *is denoted by* $\mathrm{step}[\ll \rho : C \gg]^t$ *and* $\mathrm{step}[\ll \rho : C \gg]^t = \ll \rho : C \gg^t [3] \subseteq \mathrm{scut}[\ll \rho : C \gg]^t$. *The* trace of steps *of the performance* $\ll \rho : C \gg$ *in* T *is defined as the time-indexed sequence:* $\mathrm{trace}[\mathrm{step}[\ll \rho : C \gg]]^T = \mathrm{step}[\ll \rho : C \gg]^{t_0}, \mathrm{step}[\ll \rho : C \gg]^{t_1}, \ldots$.

(iv) *The* results of the steps *of the performance* $\ll \rho : C \gg$ *at time* t *is given by a mapping* $\mathrm{result} : \mathrm{Prfs}[\rho : C] \to T \to \wp(Act \times [0, 1])$ *such that, given the step* $\mathrm{step}[\ll \rho : C \gg]^t$ *of the performance* $\ll \rho : C \gg$ *at time* $t \in T$, *the set of results of that step is denoted by* $\mathrm{result}[\ll \rho : C \gg]^t$ *and* $\mathrm{result}[\ll \rho : C \gg]^t = \ll \rho : C \gg^t [4] = \{(\alpha, ds^t_{\alpha:C}(u_1, \ldots, u_m)) \mid \alpha \in \mathrm{step}[\ll \rho : C \gg]^t\}$, *where* $ds^t_{\alpha:C}(u_1, \ldots, u_m)$ *is the degree satisfaction of the performance of* α, *obtained by the evaluation of the degrees of perfection* $u_1, \ldots, u_m$ *assumed by* α*'s post-condition* $post_1, \ldots, post_m$ *at time* $t + 1$ *(see Def. 1). The trace of results of steps of the performance* $\ll \rho : C \gg$ *in* T *is given by the sequence:*

$$\mathrm{trace}[\mathrm{result}[\ll \rho : C \gg]]^T = \mathrm{result}[\ll \rho : C \gg]^{t_0}, \mathrm{result}[\ll \rho : C \gg]^{t_1}, \ldots$$

The set of possible steps of a cut c is the set of its subsets $\wp(c)$. Given a family of cuts X, the set of possible steps derived from X is given by $\mathrm{psteps}[X] = \bigcup_{c \in X} \wp[c]$.

The effects of a cut $c \in \mathrm{Cuts}[\rho]$, in a context C, may be defined in a rule-based form with the help of pre- and post-conditions, analogously to rule (1), where the set of pre-conditions is the union of the sets of pre-conditions of all the actions that constitute the cut c, given by $\mathrm{pre}[c] = \bigcup\{\mathrm{pre}[\alpha] \mid \alpha \in c\}$. Similarly, the set of post-conditions of a cut $c \in \mathrm{Cuts}[\rho]$ is given by $\mathrm{post}[c] = \bigcup\{\mathrm{post}[\alpha] \mid \alpha \in c\}$.

[6] For simplicity, in this paper, given any function $f : T \to X$, where T is the time sequence, we denote $f(t)$ by f^t.

Considering a performance $\ll \rho : C \gg \in \mathrm{Prfs}[\rho : C]$ in a context $C \in Ctx$, a selected cut $c \in \mathrm{ecuts}[\ll \rho : C \gg]^t$ is said to be *satisfactorily (perfectly) performed* at time t if and only if all its actions are satisfactorily (perfectly) performed at that time. On the contrary, a selected cut $c \in \mathrm{ecuts}[\ll \rho : C \gg]^t$ is *non-satisfactorily performed* at time t if and only if at least one of its actions is non-satisfactorily performed at time t. A non-satisfactorily performed selected cut c is said to be *non-performed* at time t if and only all its actions are non-performed at time t.

Given a selected cut $c \in \mathrm{ecuts}[\ll \rho : C \gg]^t$, the set of pre-conditions of a step $s \subseteq c$ is the union of the set of pre-conditions of the actions that constitute that step, that is, $\mathrm{pre}[s] = \bigcup\{\mathrm{pre}[\alpha] \mid \alpha \in s\} \subseteq \mathrm{pre}[c]$. Analogously, the set of post-conditions of a step $s \subseteq c$ is given by $\mathrm{post}[s] = \bigcup\{\mathrm{post}[\alpha] \mid \alpha \in s\} \subseteq \mathrm{post}[c]$. A step $s \subseteq c$ can either be satisfactorily (perfectly, non-satisfactorily) performed or non-performed, in the same way as was defined for selected cuts.

Therefore, a selected cut $\mathrm{scut}[\ll \rho : C \gg]^t$ of a routine performance $\ll \rho : C \gg$ at time t is *satisfactorily* (or *perfectly*) *performed* if and only if $\mathrm{step}[\ll \rho : C \gg]^t = \mathrm{scut}[\ll \rho : C \gg]^t$ and $\mathrm{step}[\ll \rho : C \gg]^t$ is satisfactorily (or perfectly) performed. It is *non-satisfactorily performed* if either $\mathrm{step}[\ll \rho : C \gg]^t \neq \mathrm{scut}[\ll \rho : C \gg]^t$ or $\mathrm{step}[\ll \rho : C \gg]^t$ is non-satisfactorily performed. It is *non-performed* whenever either $\mathrm{step}[\ll \rho : C \gg]^t = \emptyset$ or $\mathrm{step}[\ll \rho : C \gg]^t$ is non-performed.[7]

Definition 4. *Consider a routine ρ over Act, in a given context $C \in Ctx$, with period π, whose performance $\ll \rho : C \gg$ is done in a time sequence $T = t_0, t_1, \ldots$. Then:*

- **(i)** *The performance $\ll \rho : C \gg$ is said to be* satisfactorily *(*perfectly*,* non-satisfactorily*) performed at time t if and only if $\mathrm{scut}[\ll \rho : C \gg]^t$ is satisfactorily (perfectly, non-satisfactorily) performed at time t.*
- **(ii)** *The performance $\ll \rho : C \gg$ fails at time t if $\mathrm{scut}[\ll \rho : C \gg]^t$ is non-performed at time t.*
- **(iii)** *The performance $\ll \rho : C \gg$ is said to be* satisfactorily (perfectly) performed in a cycle *that starts at time $t_i \in T$, if it is satisfactorily (perfectly) performed at all $t \in [t_i, t_{i+\pi-1}]$.*
- **(iv)** *The performance $\ll \rho : C \gg$ is said to be* non-satisfactorily performed in a cycle *that starts at time $t_i \in T$ if there is at least one $t \in [t_i, t_{i+\pi-1}]$ at which it fails or is non-satisfactorily performed.*
- **(v)** *The performance $\ll \rho : C \gg$ fails in a cycle that starts at time $t_i \in T$, if it fails at all $t \in [t_i, t_{i+\pi-1}]$.*

Example 1. Consider $Act = \{\alpha_1, \alpha_2, \alpha_3\}$ and let $\rho = (\alpha_1; (\alpha_2 + \alpha_3))^\omega$ be a routine with period equal to 2. The possible cuts in any performances of this routine are $\mathrm{Cuts}[\rho : C] = \{c_1, c_2, c_3\}$, where $c_1 = \{\alpha_1\}$, $c_2 = \{\alpha_2\}$ and $c_3 = \{\alpha_3\}$. The cuts enabled during a *perfectly performed* performance $\ll \rho : C \gg$ in the time interval $[t_0, t_2)$ (just one cycle) are given by: $\mathrm{ecuts}[\ll \rho : C \gg]^{t_0} = \{c_1\}, \mathrm{ecuts}[\ll \rho : C \gg]^{t_1} = \{c_2, c_3\}$.

Then, there are only two possibilities of traces of a perfectly performed performance $\ll \rho : C \gg$ in that interval:

[7] Observe that the enablement of a subset of cuts of a routine ρ at time $t + 1$ of a performance $\ll \rho : C \gg$ may depend on the step of the performance of the routine ρ at time t, which indicates if the cut selected at time t was or was not satisfactorily performed.

(i) either the selected cuts are $\mathrm{scut}[\ll \rho : C \gg] = t_0 \mapsto c_1, t_1 \mapsto c_3$, and the traces of steps and results of steps are, respectively:

$$\mathrm{trace}[\mathrm{step}[\ll \rho : C \gg]]^{[t_0,t_2)} = t_0 \mapsto c_1, t_1 \mapsto c_2$$
$$\mathrm{trace}[\mathrm{result}[\ll \rho : C \gg]]^{[t_0,t_2)} = t_0 \mapsto \{(\alpha_1, (s, 1))\}, t_1 \mapsto \{(\alpha_2, (s, 1))\}$$

(ii) or, the selected cuts are $\mathrm{scut}[\ll \rho : C \gg] = t_0 \mapsto c_1, t_1 \mapsto c_2$, and the traces of steps and results of steps are, respectively:

$$\mathrm{trace}[\mathrm{step}[\ll \rho : C \gg]]^{[t_0,t_2)} = t_0 \mapsto c_1, t_1 \mapsto c_3,$$
$$\mathrm{trace}[\mathrm{result}[\ll \rho : C \gg]]^{[t_0,t_2)} = t_0 \mapsto \{(\alpha_1, (s, 1))\}, t_1 \mapsto \{(\alpha_3, (s, 1))\},$$

where each step in each time, which coincides with the cut selected at that time, is perfectly performed. Consider that the pre-conditions of both actions α_2 and α_3 are the post-conditions generated by the performance of the action α_1, and the minimum degrees of truth required for the post-conditions of both α_2 and α_3 are equal to 1. Then, supposing that, in both cases (i) and (ii) above, one has that $\mathrm{result}[\ll \rho : C \gg]^{t_0} = \{(\alpha_1, (s, k_1 < 1))\}$, then, probably, one would have $\mathrm{result}[\ll \rho : C \gg]^{t_0} = \{(\alpha_2, (ns, k_2 < 1))\}$ (in case (i)) or $\mathrm{result}[\ll \rho : C \gg]^{t_0} = \{(\alpha_3, (ns, k_3 < 1))\}$ (case (ii)), characterizing examples of $\ll \rho : C \gg$ that are non-satisfactorily performed (failed performances whenever $k_1 = k_2 = k_3 = 0$).

Example 2. Consider $Act = \{\alpha_1, \alpha_2, \alpha_3\}$ and let $\rho = ((\alpha_1 + \alpha_2)^3 \mid \alpha_3)^\omega$ be a routine with period equal to 4. The possible cuts in the performance of this routine are $\mathrm{Cuts}[\rho : C] = \{c_0, c_1, c_2, c_3, c_4, c_5\}$, where: $c_0 = \{\varepsilon\}$, $c_1 = \{\alpha_1\}$, $c_2 = \{\alpha_2\}$, $c_3 = \{\alpha_3\}$, $c_4 = \{\alpha_1, \alpha_3\}$ and $c_5 = \{\alpha_2, \alpha_3\}$. Table 2 shows the cuts enabled during a performance $\ll \rho : C \gg$ in 5 cycles, the selected cuts in each time t and the trace of steps of the performance, which was perfectly performed in the first cycle, but failed in the second cycle, since the cut at time t_6 failed. The third and fourth cycles $\ll \rho : C \gg$ were just non-satisfactorily performed, since the cuts at times t_8 and t_{12} were non-satisfactorily performed. At time t_8, the action α_1 of the selected cut at that time was executed in the respective performance step, with a performance satisfactoriness degree of 0.5, but in a non-satisfactory way (since at least one of its post-conditions did not have the required minimum degree of truth). At time t_{12}, the action α_3 of the selected cut at that time was not even executed in the respective performance step. Finally, the fifth cycle failed, since the step at time t_{19} was empty.

3 Expectations

We consider two kinds of expectations: (i) *expectations of actions*, that is, that some set of actions happen in the performance of a given routine at a given time, and (ii) *expectations of facts*, which are expectations that some facts become true, with a certain degree, as a consequence of some set of actions occurring in a given routine at a given time. For example, in calendar systems [8], expectations of actions typically occur when a user requests that the personal assistants perform some actions for him or her. Alternatively, expectations of facts occur when personal assistants interact together in order to fulfil a global goal that is given by the user they support.

Table 2. Sample performances of the routine $\rho = ((\alpha_1 + \alpha_2)^3 \mid \alpha_3)^\omega$

Time	Enabled Cuts	Selected Cut	Step	Results
t_0	$\{c_0, c_1, c_2, c_3, c_4, c_5\}$	c_1	c_1	$\{(\alpha_1, (s, 1))\}$
t_1	$\{c_0, c_1, c_2, c_3, c_4, c_5\}$	c_1	c_1	$\{(\alpha_1, (s, 1))\}$
t_2	$\{c_0, c_1, c_2, c_3, c_4, c_5\}$	c_5	c_5	$\{(\alpha_2, (s, 1)), (\alpha_3, (s, 1))\}$
t_3	$\{c_0\}$	c_0	c_0	$\{(\varepsilon, (s, 1))\}$
t_4	$\{c_0, c_1, c_2, c_3, c_4, c_5\}$	c_5	c_5	$\{(\alpha_2, (s, 1)), (\alpha_3, (s, 1))\}$
t_5	$\{c_0, c_1, c_2\}$	c_2	c_2	$\{(\alpha_2, (s, 1))\}$
t_6	$\{c_0, c_1, c_2\}$	c_1	c_1	$\{(\alpha_1, (ns, 0))\}$
t_7	$\{c_0\}$	c_0	c_0	$\{(\varepsilon, (s, 1))\}$
t_8	$\{c_0, c_1, c_2, c_3, c_4, c_5\}$	c_4	c_4	$\{(\alpha_1, (ns, 0.7)), (\alpha_3, (s, 1))\}$
t_9	$\{c_0, c_1, c_2\}$	c_1	c_1	$\{(\alpha_1, (s, 1))\}$
t_{10}	$\{c_0, c_1, c_2\}$	c_2	c_2	$\{(\alpha_2, (s, 1))\}$
t_{11}	$\{c_0\}$	c_0	c_0	$\{(\varepsilon, (s, 1))\}$
t_{12}	$\{c_0, c_1, c_2, c_3, c_4, c_5\}$	c_4	$\{\alpha_1\}$	$\{(\alpha_1, (s, 1))\}$
t_{13}	$\{c_0, c_1, c_2\}$	c_1	c_1	$\{(\alpha_1, (s, 1))\}$
t_{14}	$\{c_0, c_1, c_2\}$	c_2	c_2	$\{(\alpha_2, (s, 1))\}$
t_{15}	$\{c_0\}$	c_0	c_0	$\{(\varepsilon, (s, 1))\}$
t_{16}	$\{c_0, c_1, c_2, c_3, c_4, c_5\}$	c_1	c_1	$\{(\alpha_1, (s, 1))\}$
t_{17}	$\{c_0, c_1, c_2, c_3, c_4, c_5\}$	c_1	c_1	$\{(\alpha_1, (s, 1))\}$
t_{18}	$\{c_0, c_1, c_2, c_3, c_4, c_5\}$	c_2	c_2	$\{(\alpha_2, (s, 1))\}$
t_{19}	$\{c_3\}$	c_3	$\emptyset$	$\emptyset$
...	...	...	...	

Given the set $E = \mathrm{ecuts}[\ll \rho : C \gg]^{t_i} \subseteq \mathrm{Cuts}[\rho]$ of the cuts enabled by a performance $\ll \rho : C \gg$ at a certain time $t_i \in T$, it may be possible to have a cut-selection probability distribution over E, given by $\chi^{t_i}_{\ll\rho:C\gg} : E \to [0, 1]$, such that, for each $c \in E$, $\chi^{t_i}_{\ll\rho:C\gg}(c)$ gives the probability of the selection of c, considering the context $C \in Ctx$, such that $\sum_{c\in E} \chi^{t_i}_{\ll\rho:C\gg}(c) = 1$. Denote by ρ_χ the routine ρ with associated cut-selection probability functions $\chi^{t_i}_{\ll\rho:C\gg}$, where $i \in \mathbb{N}$.

Definition 5. *Given a performance $\ll \rho_\chi : C \gg$ of a routine ρ_χ in a context C, the* cut selection expectation *of $\ll \rho_\chi : C \gg$ at a certain time $t_i \in T$ is the subset of cuts of the cuts enabled at time t_i whose cut-selection probabilities are maximal in* $\mathrm{ecuts}[\ll \rho_\chi : C \gg]^t \subseteq \mathrm{Cuts}[\rho_\chi]$, *that is,*

$$\mathrm{csxpt}[\ll \rho_\chi : C \gg]^{t_i} = \{c \in \mathrm{ecuts}[\ll \rho_\chi : C \gg]^{t_i} \mid \forall c' \in \mathrm{ecuts}[\ll \rho_\chi : C \gg]^{t_i} : \chi^{t_i}_{\ll\rho:C\gg}(c') \leq \chi^{t_i}_{\ll\rho:C\gg}(c)\}$$

Given the cut $\mathrm{scut}[\ll \rho : C \gg]^{t_i}$, selected at time t_i in a performance $\ll \rho : C \gg$, the probability that an action $\alpha \in \mathrm{scut}[\ll \rho : C \gg]^{t_i}$ is executed in the step $\mathrm{step}[\ll \rho : C \gg]^{t_i}$ by an agent, in the context $C \in Ctx$ and at t_i, is given by the function $\phi^{t_i}_{\mathrm{scut}[\ll\rho:C\gg]^{t_i}} : \mathrm{scut}[\ll \rho : C \gg]^{t_i} \to [0, 1]$. The probability of $\alpha \in \mathrm{scut}[\ll \rho : C \gg]^{t_i}$ not being executed in the step $\mathrm{step}[\ll \rho : C \gg]^{t_i}$ is $1 - \phi^{t_i}_{\mathrm{scut}[\ll\rho C\gg]^{t_i}}(\alpha)$. Then, the probability of a step being executed in $\mathrm{scut}[\ll \rho : C \gg^{t_i}]$ is given by the function $\Phi^{t_i}_{\mathrm{scut}[\ll\rho:C\gg]^{t_i}} : \wp[\mathrm{scut}[\ll \rho : C \gg]^{t_i}] \to [0, 1]$, defined by

$$\Phi^{t_i}_{\mathrm{scut}[\ll\rho:C\gg]^{t_i}}(X) = \prod_{\alpha\in\mathrm{scut}[\ll\rho:C\gg]^{t_i}} Pr(\alpha), \text{ with } Pr(\alpha) = \begin{cases} \phi^{t_i}_{\mathrm{scut}[\ll\rho:C\gg]^{t_i}}(\alpha) & \text{if } \alpha \in X \\ 1 - \phi^{t_i}_{\mathrm{scut}[\ll\rho:C\gg]^{t_i}}(\alpha) & \text{otherwise.} \end{cases} \tag{2}$$

Denote by ρ_Φ the routine ρ with associated step probability functions $\Phi^{t_i}_{\mathrm{scut}[\ll\rho:C\gg]^{t_i}}$ for each selected cut, with $i \in \mathbb{N}$.

Definition 6. *Given a performance* $\ll \rho_\Phi : C \gg$*, the* step expectation *in a cut* $\mathrm{scut}[\ll \rho_\Phi : C \gg]^{t_i}$ *selected at time* t_i*, are the steps of the cut* $\mathrm{scut}[\ll \rho_\Phi : C \gg]^{t_i}$ *whose probabilities of being executed at* t_i *are maximal in* $\wp[\mathrm{scut}[\ll \rho_\Phi : C \gg]^{t_i}]$*:*

$$\mathrm{stxpt}[\mathrm{scut}[\ll \rho_\Phi : C \gg]]^{t_i} = \{X \in \wp[\mathrm{scut}[\ll \rho_\Phi : C \gg]^{t_i}] \mid \forall X' \in \wp[\mathrm{scut}[\ll \rho_\Phi : C \gg]^{t_i}] : \Phi^{t_i}_{\mathrm{scut}[\ll \rho_\Phi : C \gg]^{t_i}}(X') \leq \Phi^{t_i}_{\mathrm{scut}[\ll \rho_\Phi : C \gg]^{t_i}}(X)\}.$$

The *overall step probability* of any possible step being executed in a performance $\ll \rho : C \gg$ at a given time $t_i \in T$ is given by a function $\sigma^{t_i}_{\ll \rho : C \gg} : \mathrm{psteps}[\mathrm{ecuts}[\ll \rho : C \gg]]^{t_1} \to [0, 1]$, defined by:

$$\sigma^{t_i}_{\ll \rho : C \gg}(X) = \sum_{c \in \mathrm{ecuts}[\ll \rho : C \gg]^{t_1}} \chi^{t_i}_{\ll \rho : C \gg}(c) \cdot Pr(X), \text{ with } Pr(X) = \begin{cases} \Phi^{t_i}_c(X) & \text{if } X \subseteq c \\ 0 & \text{otherwise,} \end{cases} \tag{3}$$

where χ and Φ are the cut-selection probability functions and step probability functions, respectively. Denote by ρ_σ the routine ρ with associated *overall step probability* functions $\sigma^{t_i}_{\ll \rho : C \gg}$, with $i \in \mathbb{N}$.

Definition 7. *The* possible-step expectation *of a performance* $\ll \rho_\sigma : C \gg^{t_i}$*, at a certain time* $t_i \in T$*, is the subset of possible steps whose probabilities of being executed by the performance* $\ll \rho_\sigma : C \gg$ *of the routine* ρ_σ *at time* t_i *and context* C *are maximal in* $\mathrm{psteps}[\mathrm{ecuts}[\ll \rho_\sigma : C \gg]]^{t_1}$*, that is,*

$$\mathrm{psxpt}[\mathrm{ecuts}[\ll \rho_\sigma : C \gg]]^{t_1} = \{X \in \mathrm{psteps}[\mathrm{ecuts}[\ll \rho_\sigma : C \gg]]^{t_1} \mid \forall X' \in \mathrm{psteps}[\mathrm{ecuts}[\ll \rho_\sigma : C \gg]]^{t_1} : \sigma^{t_i}_{\ll \rho_\sigma : C \gg}(X') \leq \sigma^{t_i}_{\ll \rho_\sigma : C \gg}(X)\}.$$

Then, considering a routine with period π, the possible step expectation of a performance $\ll \rho_\sigma : C \gg$, in a period that starts at time t_i, is a sequence

$$\mathrm{psxpt}[\ll \rho_\sigma : C \gg]^{\pi} = \mathrm{psxpt}[\ll \rho_\sigma : C \gg]^{t_i}, \ldots, \mathrm{psxpt}[\ll \rho_\sigma : C \gg]^{t_i + \pi - 1}.$$

Definition 8. *The* expectation of the result of an action $\alpha \in Act$ *in a context* C*, at time* t_i*, is defined as*

$$\mathrm{rxpt}[\alpha : C]^{t_i} \equiv pre_1 : d_1, \ldots, pre_n : d_n \Rightarrow post_1 : f_1(d_1, \ldots, d_n), \ldots, post_m : f_m(d_1, \ldots, d_n), \tag{4}$$

where $f_1, \ldots, f_m : [0, 1]^n \to [0, 1]$ *are the functions giving the expected degrees of perfection of the post-conditions* $post_1, \ldots, post_m$ *of* α*, considering the degrees of perfection* $d_1, \ldots, d_n$ *of the pre-conditions* $pre_1, \ldots, pre_n$ *at time* t_i*.* [8]

The expectation of the result of a set of actions $X \subseteq Act$, which are performed at a certain time t_i in a context C, is defined as $\mathrm{rxpt}[X : C]^{t_i} = \{\mathrm{rxpt}[\alpha : C]^{t_i} \mid \alpha \in X\}$.

Definition 9. *Consider a possible-step expectation* $\mathrm{psxpt}[\ll \rho_\sigma : C \gg^{t_i}]$ *of a performance* $\ll \rho_\sigma : C \gg$*, at a certain time* $t_i \in T$*. The expectation of the results of a performance* $\ll \rho_\sigma : C \gg$ *at time* t_i*, is then defined as*

$$\mathrm{rxpt}[\ll \rho_\sigma : C \gg]^{t_i} = \{\mathrm{rxpt}[X : C]^{t_i} \mid X \in \mathrm{psxpt}[\ll \rho_\sigma : C \gg]^{t_i}\}.$$

The resulting expectation of $\ll p_{\rho_\sigma} : C \gg$, in a period π that starts at time t_i, is

$$\mathrm{rxpt}[\ll \rho_\sigma : C \gg]^{\pi} = \mathrm{rxpt}[\ll \rho_\sigma : C \gg]^{t_i}, \ldots, \mathrm{rxpt}[\ll \rho_\sigma : C \gg]^{t_i + \pi - 1}.$$

[8] The notion of expectation of the result of an action can be treated as a particular case of the notion of expectation adopted in [9, 10], if one includes the treatment of probabilities and degrees of perfection of realization of actions in periodic routines.

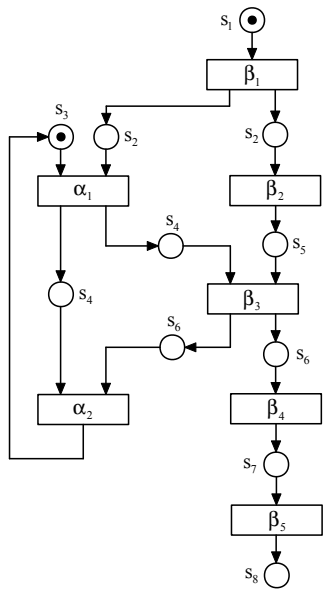

Table(a) Agent actions

Action	Agent: action specification
α_1	a: to open the door
α_2	a: to close the door
β_1	b: to enter into the scene
β_2	b: to approach the door
β_3	b: to pass through the open door
β_4	b: to withdraw from the door
β_5	b: to leave the scene

Table(b) Conditions

Notation	Condition
s_1	the scene started
s_2	the office employee is in the scene
s_3	the door is closed
s_4	the door is open
s_5	the office employee is near the door
s_6	the office employee is inside the building
s_7	the office employee withdrew from the door
s_8	the scene ended

Table(c) Action pre- and post-conditions

Action	Pre-conditions	Post-conditions
α_1	$\{s_2, s_3\}$	$\{s_4\}$
α_2	$\{s_4, s_6\}$	$\{s_3\}$
β_1	$\{s_1\}$	$\{s_2\}$
β_2	$\{s_2\}$	$\{s_5\}$
β_3	$\{s_4, s_5\}$	$\{s_6\}$
β_4	$\{s_6\}$	$\{s_7\}$
β_5	$\{s_7\}$	$\{s_8\}$

Fig. 1. The Petri net representation and action specifications of the routine ρ

4 A Contextualized Example

Consider the routine ρ_σ of a porter (agent a_1), who is in charge of opening and closing the front-door of a building, and a person (agent b) who needs to get inside the building to reach the office where he works everyday. Let the routine be represented in the Petri net shown in Fig. 1, where Table(a) specifies the agent actions involved in ρ_σ, Table (b) specifies the conditions that may occur in ρ_σ, and Table(c) specifies the pre- and post-conditions of those actions in terms of such situations.

The structure of the routine ρ_σ can be described as $\rho = (\beta_1; (\alpha_1 \mid \beta_2); \beta_3; (\alpha_2 \mid \beta_4; \beta_5))^\omega$. Routine ρ_σ has period $\pi = 7$ and overall step probability functions $\sigma^{t_i}_{\ll\rho:C\gg}$ (specified below). The possible cuts in any performance of ρ are $c_0 = \{\varepsilon\}$, $c_1 = \{\beta_1\}$, $c_2 = \{\alpha_1\}$, $c_3 = \{\beta_2\}$, $c_4 = \{\alpha_1, \beta_2\}$, $c_5 = \{\beta_3\}$, $c_6 = \{\alpha_2\}$, $c_7 = \{\beta_4\}$, $c_8 = \{\beta_5\}$, $c_9 = \{\alpha_2, \beta_4\}$ e $c_{10} = \{\alpha_2, \beta_5\}$.

Let $\chi^{t_i}_{\ll\rho:C\gg}$ be the cut-selection probability functions associated to ρ_σ and consider a particular performance $\ll \rho_\sigma : C \gg$ in a context C, where, at time t_1, the enabled cuts are $\mathrm{ecuts}[\ll \rho_\sigma : C \gg]^{t_1} = \{c_0, c_2, c_3, c_4\}$, and the cut-selection probabilities are $\chi^{t_1}_{\ll\rho_\sigma:C\gg}(c_0) = 0.05$, $\chi^{t_1}_{\ll\rho_\sigma:C\gg}(c_2) = 0.1$, $\chi^{t_1}_{\ll\rho_\sigma:C\gg}(c_3) = 0.15$ and $\chi^{t_1}_{\ll\rho_\sigma:C\gg}(c_4) = 0.7$. Then, the cut selection expectation of $\ll \rho_\sigma : C \gg$ is $\mathrm{csxpt}[\ll \rho_\sigma : C \gg]^{t_1} = \{c_4\}$, that is, the cut that is expected to be selected at time t_1 is $c_4 = \{\alpha_1, \beta_2\}$.

Consider that the cut that is selected at time t_1 fits that expectation, that is, $\mathrm{scut}[\ll \rho_\sigma : C \gg]^{t_1} = c_4$. Suppose that the porter (agent a) is very attentive, and usually opens the door (action α_1) when the office employee appears in the scene. However, the office employee (agent b) is easily distracted and sometimes stops before approach-

ing the door (action β_2) in order to do an action that is not in the routine, such as to talk to someone or to answer the mobile phone. Suppose that the probabilities of the actions $\alpha_1, \beta_2 \in c_4$ being executed at the step at time t_1 are $\phi^{t_1}_{c_4}(\alpha_1) = 0.9$ and $\phi^{t_1}_{c_4}(\beta_2) = 0.7$, respectively. The possible steps of the selected cut c_4 are given by $\wp[c_4] = \{\emptyset, \{\alpha_1\}, \{\beta_2\}, \{\alpha_1, \beta_2\}\}$. Then, the probability of each possible step being executed at time t_1, according to Eq. (2), is:

$$\Phi^{t_1}_{c_4}(\emptyset) = (1 - \phi^{t_1}_{c_4}(\alpha_1)) \cdot (1 - \phi^{t_1}_{c_4}(\beta_2)) = 0.03, \Phi^{t_1}_{c_4}(\{\alpha_1\}) = \phi^{t_1}_{c_4}(\alpha_1) \cdot (1 - \phi^{t_1}_{c_4}(\beta_2)) = 0.27$$
$$\Phi^{t_1}_{c_4}(\{\beta_2\}) = (1 - \phi^{t_1}_{c_4}(\alpha_1)) \cdot \phi^{t_1}_{c_4}(\beta_2) = 0.07, \Phi^{t_1}_{c_4}(\{\alpha_1, \beta_2\}) = \phi^{t_1}_{c_4}(\alpha_1) \cdot \phi^{t_1}_{c_4}(\beta_2) = 0.63.$$

The step expectation related to the cut c_4 at time t_1 is $\mathrm{sxpt}[\ll \rho_\sigma : C \gg]^{t_1} = \{\{\alpha_1, \beta_2\}\}$.

The probability of the possible steps being executed in the performance $\ll \rho_\sigma : C \gg$ at time t_1 (Eq. (3)), given that the enabled cuts are $\mathrm{ecuts}[\ll \rho_\sigma \gg]^{t_1} = \{c_0, c_2, c_3, c_4\}$, are:

$$\sigma^{t_1}_{\ll \rho : C \gg}(\{\alpha_1, \beta_2\}) = \chi^{t_i}_{\ll \rho : C \gg}(c_4) \cdot \Phi^{t_1}_{c_4}(\{\alpha_1, \beta_2\}) = 0.7 \cdot 0.63 = 0.441$$
$$\sigma^{t_1}_{\ll \rho : C \gg}(\{\alpha_1\}) = \chi^{t_1}_{\ll \rho : C \gg}(c_2) \cdot \Phi^{t_1}_{c_2}(\{\alpha_1\}) + \chi^{t_1}_{\ll \rho : C \gg}(c_4) \cdot \Phi^{t_1}_{c_4}(\{\alpha_1\}) = 0.279$$
$$\sigma^{t_1}_{\ll \rho : C \gg}(\{\beta_2\}) = \chi^{t_1}_{\ll \rho : C \gg}(c_3) \cdot \Phi^{t_1}_{c_3}(\{\beta_2\}) + \chi^{t_1}_{\ll \rho : C \gg}(c_4) \cdot \Phi^{t_1}_{c_4}(\{\beta_2\}) = 0.154$$
$$\sigma^{t_1}_{\ll \rho : C \gg}(\emptyset) = \chi^{t_1}_{\ll \rho : C \gg}(c_0) \cdot \Phi^{t_1}_{c_0}(\emptyset) + \ldots + \chi^{t_1}_{\ll \rho : C \gg}(c_4) \cdot \Phi^{t_1}_{c_4}(\emptyset) = 0.126$$

Then, the possible-step expectation of the performance $\ll \rho_\sigma : C \gg$ at time t_1 is $\mathrm{psxpt}[\ll \rho_\sigma : C \gg]^{t_1} = \{\{\alpha_1, \beta_2\}\}$.

Now, consider that the possible step at time t_1 is indeed the step $\{\alpha_1, \beta_2\}$, and that the expectation of the performance result of the actions α_1 and β_2 in the context C are defined, respectively, as $\mathrm{rxpt}[\alpha_1 : C]^{t_1} \equiv s_2 : d_{s_2}, s_3 : d_{s_3} \Rightarrow s_4 : f_{s_4}(d_{s_2}, d_{s_3})$ and $\mathrm{rxpt}[\beta_2 : C]^{t_1} \equiv s_2 : d_{s_2} \Rightarrow s_5 : f_{s_5}(d_{s_2})$ where s_2, s_3, s_4 and s_5 are situations specified in Fig. 1(b), and $f_{s_4} : [0,1]^2 \rightarrow [0,1]$ and $f_{s_5} : [0,1] \rightarrow [0,1]$, defined by $f_{s_4}(x, y) = \min\{x, y\}$ and $f_{s_5}(x) = x$, are the expecting functions of actions α_1 and β_2, respectively, as specified in Eq. (4). Thus, the result expectation of the performance $\ll \rho : C \gg$, at time t_1, is $\mathrm{rxpt}[\ll \rho_\sigma : C \gg]^{t_1} = \{\{\mathrm{rxpt}[\alpha_1 : C]^{t_1}, \mathrm{rxpt}[\beta_1 : C]^{t_1}\}\}$.

Finally, consider the result expectation $\mathrm{rxpt}[\alpha_1 : C]^{t_1}$ and suppose that the door is half-open and that the porter is not sure that the employee is already at the scene, such that the degrees of perfection of α_1's pre-conditions are $d_{s_2} = 0.9$ and $d_{s_3} = 0.7$ at time t_1 in the context C. In such a situation, the result expectation of the performance of α_1 is that the door may not be opened correctly, since the degree of perfection of α_1's post-condition s_4 is expected to be $f_{s_4}(0.9, 0.7) = \min\{0.9, 0.7\} = 0.7$.

Notice, however, that the notion of routine is defined so that even if all pre-conditions are *totally* true (i.e., $d_{s_2} = d_{s_3} = 1$, so that $f_{s_4}(1, 1) = 1$) there is always a possibility that the door is not correctly opened after the performance of α_1. For instance, the action α_1 may not be performed correctly, or some condition (which happens only rarely and so is justifiably not included in the routine) occurs negatively affecting the result of the action.

5 Conclusion

This paper introduced an objective notion of expectation of actions and facts in the context of routine-oriented multiagent systems. Expectations were defined on behavioral

terms, inspired by the notion of maximal expected utility, where utility values were substituted by degrees of perfection of actions (involving degrees of perfection of facts). The proposed notion of expectations was defined in order to ground the cognitive concept of expectation in the context of routine-oriented multiagent systems. In this way, notions that are essential for proactive agents, like surprise and disappointment, can be defined in such context. We hope to integrate these aspects in our future work. In terms of applications, such as modeling family behaviors in domestic settings [7], our proposed approach may help the cognitive modeling of expectations, since the subjective model should be compatible with the objective one. The same may happen for personal assistants in, e.g., calendar systems [8].

Acknowledgements. This work was done while ACRC was visiting lecturer at UJF, and GPD was an invited researcher at the LIG/MAGMA Group, in Grenoble, between January and February 2009. Support from CNPq and CAPES is also acknowledged. The authors thank M. Piunti for noting how the objective degrees of perfection could support a notion of utility value (related to routines, not to actions) for the system as a whole.

References

1. Castelfranchi, C.: Mind as an anticipatory device: For a theory of expectations. In Gregorio, M.D. et al., eds.: Brain, Vision, and Artificial Intelligence. Number 3704 in LNCS. Springer (2005) 258–276
2. Piunti, M., Castelfranchi, C., Falcone, R.: Expectations driven approach for situated, goal-directed agents. In Baldoni, M., et al., eds.: Proc. of 8th AI*IA/TABOO Joint Work. "From Objects to Agents": Agents and Industry, Genova, Seneca Edizioni Torino (2007) 104–111
3. Piunti, M., Goncalves, J., Martinho, C.: Modeling expectations for affective agents. In: Proceedings of the ACII-07 Doctoral Consortium. (2007)
4. Savage, L.J.: The Foundations of Statistics. Wiley, New York (1954)
5. Giddens, A.: The Constitution of Society: Outline of the Theory of Structuration. Polity Press, Cambridge (1984)
6. Costa, A.C.R., Dimuro, G.P.: A minimal dynamical organization model. In Dignum, V., ed.: Handbook of Research on Multi-Agent Systems: Semantics and Dynamics of Organizational Models. IGI Global, Hershey (2009) 419–445
7. Dugdale, J., Salembier, P.: Modélisation située des activités individuelles et collectives pour la conception. Rapport de contrat de collaboration EDF-IRIT/NEB, IRIT, Toulouse (2008)
8. Crépin, L., Demazeau, Y., Boissier, O., Jacquenet, F.: Privacy preservation in a decentralized calendar system. In Demazeau, Y., et al., eds.: 7th Intl. Conf. on Practical Aspects of Agents and Multi-agent Systems (PAAMS 2009). Number 55 in Advances in Soft Computing. Springer, Berlin (2009) 525–537
9. Cranefield, S., Winikoff, M.: Verifying social expectations by model checking truncated paths. In Hübner, J.F. et al., eds.: Coordination, Organizations, Institutions and Norms in Agent Systems IV. Number 5428 in LNAI. Springer (2009) 204–219
10. Cranefield, S.: Modelling and monitoring social expectations in multi-agent systems. In Vázquez-Salceda et al., eds.: Coordination, Organizations, Institutions and Norms in Agent Systems II. Number 4386 in LNAI. Springer (2007) 308–321
11. Zadeh, L.A.: Fuzzy sets. Information and Control **8** (1965) 338–353
12. Petri, C.A.: Concurreny. In Brauer, W., ed.: Net Theory and Applications. Number 84 in LNCS. Berlin, Springer-Verlag (1980) 251–260